User's Manual

32

HMI Expansion Board

R0K50564MB001BR

User's Manual

Renesas Microcomputer
RX64M Group

All information contained in these materials, including products and product specifications, represents information on the product at the time of publication and is subject to change by Renesas Electronics Corporation without notice. Please review the latest information published by Renesas Electronics Corporation through various means, including the Renesas Electronics Corporation website (http://www.renesas.com).

Renesas Electronics
www.renesas.com

Rev.1.01 2015.1

Notice

1. Descriptions of circuits, software and other related information in this document are provided only to illustrate the operation of semiconductor products and application examples. You are fully responsible for the incorporation of these circuits, software, and information in the design of your equipment. Renesas Electronics assumes no responsibility for any losses incurred by you or third parties arising from the use of these circuits, software, or information.
2. Renesas Electronics has used reasonable care in preparing the information included in this document, but Renesas Electronics does not warrant that such information is error free. Renesas Electronics assumes no liability whatsoever for any damages incurred by you resulting from errors in or omissions from the information included herein.
3. Renesas Electronics does not assume any liability for infringement of patents, copyrights, or other intellectual property rights of third parties by or arising from the use of Renesas Electronics products or technical information described in this document. No license, express, implied or otherwise, is granted hereby under any patents, copyrights or other intellectual property rights of Renesas Electronics or others.
4. You should not alter, modify, copy, or otherwise misappropriate any Renesas Electronics product, whether in whole or in part. Renesas Electronics assumes no responsibility for any losses incurred by you or third parties arising from such alteration, modification, copy or otherwise misappropriation of Renesas Electronics product.
5. Renesas Electronics products are classified according to the following two quality grades: “Standard” and “High Quality”. The recommended applications for each Renesas Electronics product depends on the product’s quality grade, as indicated below.

   “Standard”: Computers; office equipment; communications equipment; test and measurement equipment; audio and visual equipment; home electronic appliances; machine tools; personal electronic equipment; and industrial robots etc.

   “High Quality”: Transportation equipment (automobiles, trains, ships, etc.); traffic control systems; anti-disaster systems; anti-crime systems; and safety equipment etc.

   Renesas Electronics products are neither intended nor authorized for use in products or systems that may pose a direct threat to human life or bodily injury (artificial life support devices or systems, surgical implantations etc.), or may cause serious property damages (nuclear reactor control systems, military equipment etc.). You must check the quality grade of each Renesas Electronics product before using it in a particular application. You may not use any Renesas Electronics product for any application for which it is not intended. Renesas Electronics shall not be in any way liable for any damages or losses incurred by you or third parties arising from the use of any Renesas Electronics product for which the product is not intended by Renesas Electronics.
6. You should use the Renesas Electronics products described in this document within the range specified by Renesas Electronics, especially with respect to the maximum rating, operating supply voltage range, movement power voltage range, heat radiation characteristics, installation and other product characteristics. Renesas Electronics shall have no liability for malfunctions or damages arising out of the use of Renesas Electronics products beyond such specified ranges.
7. Although Renesas Electronics endeavors to improve the quality and reliability of its products, semiconductor products have specific characteristics such as the occurrence of failure at a certain rate and malfunctions under certain use conditions. Further, Renesas Electronics products are not subject to radiation resistance design. Please be sure to implement safety measures to guard them against the possibility of physical injury, and injury or damage caused by fire in the event of the failure of a Renesas Electronics product, such as safety design for hardware and software including but not limited to redundancy, fire control and malfunction prevention, appropriate treatment for aging degradation or any other appropriate measures. Because the evaluation of microcomputer software alone is very difficult, please evaluate the safety of the final products or systems manufactured by you.
8. Please contact a Renesas Electronics sales office for details as to environmental matters such as the environmental compatibility of each Renesas Electronics product. Please use Renesas Electronics products in compliance with all applicable laws and regulations that regulate the inclusion or use of controlled substances, including without limitation, the EU RoHS Directive. Renesas Electronics assumes no liability for damages or losses occurring as a result of your noncompliance with applicable laws and regulations.
9. Renesas Electronics products and technology may not be used for or incorporated into any products or systems whose manufacture, use, or sale is prohibited under any applicable domestic or foreign laws or regulations. You should not use Renesas Electronics products or technology described in this document for any purpose relating to military applications or use by the military, including but not limited to the development of weapons of mass destruction. When exporting the Renesas Electronics products or technology described in this document, you should comply with the applicable export control laws and regulations and follow the procedures required by such laws and regulations.
10. It is the responsibility of the buyer or distributor of Renesas Electronics products, who distributes, disposes of, or otherwise places the product with a third party, to notify such third party in advance of the contents and conditions set forth in this document, Renesas Electronics assumes no responsibility for any losses incurred by you or third parties as a result of unauthorized use of Renesas Electronics products.
11. This document may not be reproduced or duplicated in any form, in whole or in part, without prior written consent of Renesas Electronics.
12. Please contact a Renesas Electronics sales office if you have any questions regarding the information contained in this document or Renesas Electronics products, or if you have any other inquiries.

(Note 1) “Renesas Electronics” as used in this document means Renesas Electronics Corporation and also includes its majority-owned subsidiaries.

(Note 2) “Renesas Electronics product(s)” means any product developed or manufactured by or for Renesas Electronics.

(2012.4)

WEEE Directive

Renesas development tools and products are directly covered by the European Union's Waste Electrical and Electronic Equipment, (WEEE), Directive 2002/96/EC.
As a result, this equipment, including all accessories, must not be disposed of as household waste but through your locally recognised recycling or disposal schemes.
As part of our commitment to environmental responsibility Renesas also offers to take back the equipment and has implemented a Tools Product Recycling Program for customers in Europe. This allows you to return equipment to Renesas for disposal through our approved Producer Compliance Scheme.
To register for the program, click here "http://www.renesas.com/weee".

About This Manual

1. Purpose and Target Readers

This manual is designed to provide the user with an understanding of the functions and operating specifications of this extension board. A basic knowledge of electrical circuits, logical circuits, and microcomputers (MCUs) is necessary in order to use this manual.
This manual is composed of an overview of the expansion board; its functional and operational specifications.

Carefully read all notes described in the body of text in the manual.

The Revision History summarizes the modifications and additions to the previous versions. Refer to the text of the manual for details.

The following document applies to the RX64M HMI Expansion Board R0K50564MB001BR.

Document Type	Description	Document Title	Document No.
User's Manual	Describes functional specifications (devices, memory maps, electrical characteristics), and operational specifications (connectors, and switches)	HMI Expansion Board R0K50564MB001BR User's Manual	This publication

The following documents apply to the RX64M group. Make sure to refer to the latest version of these documents which can be obtained from Renesas Electronics website.

Document Type	Description	Document Title	Document No.
User's Manual: Hardware	Hardware specifications (pin assignments, memory maps, peripheral function specifications, electrical characteristics, timing charts) and operation description	RX64M Group User's manual: Hardware	R01UH0377EJ
Application note	Applications, sample programs, etc.	Available on Renesas Electronics website	
RENESAS TECHNICAL UPDATE	Information regarding product specifications, documents, etc.		

2. Frequently Used Abbreviations and Acronyms

ACIA	Asynchronous Communication Interface Adapter
bps	Bits per second
CRC	Cyclic Redundancy Check
DMA	Direct Memory Access
DMAC	Direct Memory Access Controller
GSM	Global System for Mobile Communications
Hi-Z	High Impedance
IEBus	Inter Equipment bus
I/O	Input/Output
IrDA	Infrared Data Association
LSB	Least Significant Bit
MSB	Most Significant Bit
NC	Non-Connection
PLL	Phase Locked Loop
PWM	Pulse Width Modulation
SFR	Special Function Registers
SIM	Subscriber Identity Module
UART	Universal Asynchronous Receiver/Transmitter
VCO	Voltage Controlled Oscillator

All trademarks and registered trademarks are the property of their respective owners.

Table of Contents

1. Overview 1-1

1.1 Overview 1-1
1.2 System Configuration 1-2
1.3 External Specifications 1-3
1.4 System Block Diagram 1-4
1.5 Absolute Maximum Ratings 1-5
1.6 Operating Conditions 1-5

2. Functional Specifications 2-1

2.1 Function Overview 2-1
2.2 Sound I/O Interface 2-2
2.3 7-Segment LEDs and User LEDs 2-3
2.4 Motor Control Interface 2-4
2.5 Camera Interface 2-5
2.6 Non-Contact Thermal Sensor 2-6
2.7 eMMC 2-7
2.8 Touch Panel Interface 2-8
2.9 USB Battery Charge Controller 2-9
2.10 Power Supply Wiring 2-10

3. Operational Specifications 3-1

3.1 Connector Overview 3-1
3.1.1 RSK+ for RX64M CPU Board Connectors (JA1 to JA3, JA5, JA6, SSI, and PDC) 3-2
3.1.2 Sound I/O Connectors (J1, J2, J3, and J4) 3-7
3.1.3 Motor Connector (J7) 3-9
3.1.4 External Power Supply Connector (J8) 3-9
3.1.5 Camera Connector (J9) 3-10
3.1.6 Sensor Connector (J10) 3-11
3.1.7 Touch Panel Connector (J11) 3-12
3.1.8 GND Connector (J12) 3-13
3.2 Operation Parts Layout 3-14
3.2.1 Jumpers (JP1, JP4 to JP8) 3-15
3.2.2 LEDs 3-18
3.2.3 Potentiometer 3-18

3.2.4 Test Pins 3-19
3.3 Settings for RSK+ for RX64M CPU Board 3-20
3.4 Dimensions 3-24

Appendix R0K50564MB001BR Schematics 1

1. Overview

1.1 Overview

The HMI expansion board R0K50564MB001BR is a functional expansion board used by connecting with the RSK+ for RX64M CPU Board. The features of the HMI expansion board are listed below.

- Pin jacks for sound input dual system (mic/ line-in) and sound output dual system (headphone/line-out) are included. Asahi Kasei AK4642EN is included as Audio Codec LSI to make it possible to input/output high quality sound data. The sound data can also be input to the RX64M ADC.
- 7-segment LEDs (for 10 digits) is included, which can be used to display characters for demonstrations.
- Stepping motor control circuit and connectors for motor connection are included, which enable motor operation working with the RSK+ for RX64M CPU Board communication systems and display.
- Connectors for camera connection are included. These connectors can be used as input devices for the camera with the PDC interface.
- Connectors for OMRON Non-Contact Thermal Sensor D6T-44L-06 are included as a human sensor. These connectors can be sued in demonstrations.
- An eMMC device with 8GB is included.
- A touch panel connector (8-pin FFC) for R8C/3JT touch panel demonstration board (R0K521336C0001BR) is included.
- A USB battery charge controller with RX64M USB Full-Speed (USBA) is included, which makes it possible to evaluate the lithium-ion battery charging function from VBUS (with R2A20057BX) and the power supply function from lithium-ion battery to VBUS.

1.2 System Configuration

Figure 1.1 shows the Example of System Configuration with HMI expansion board.

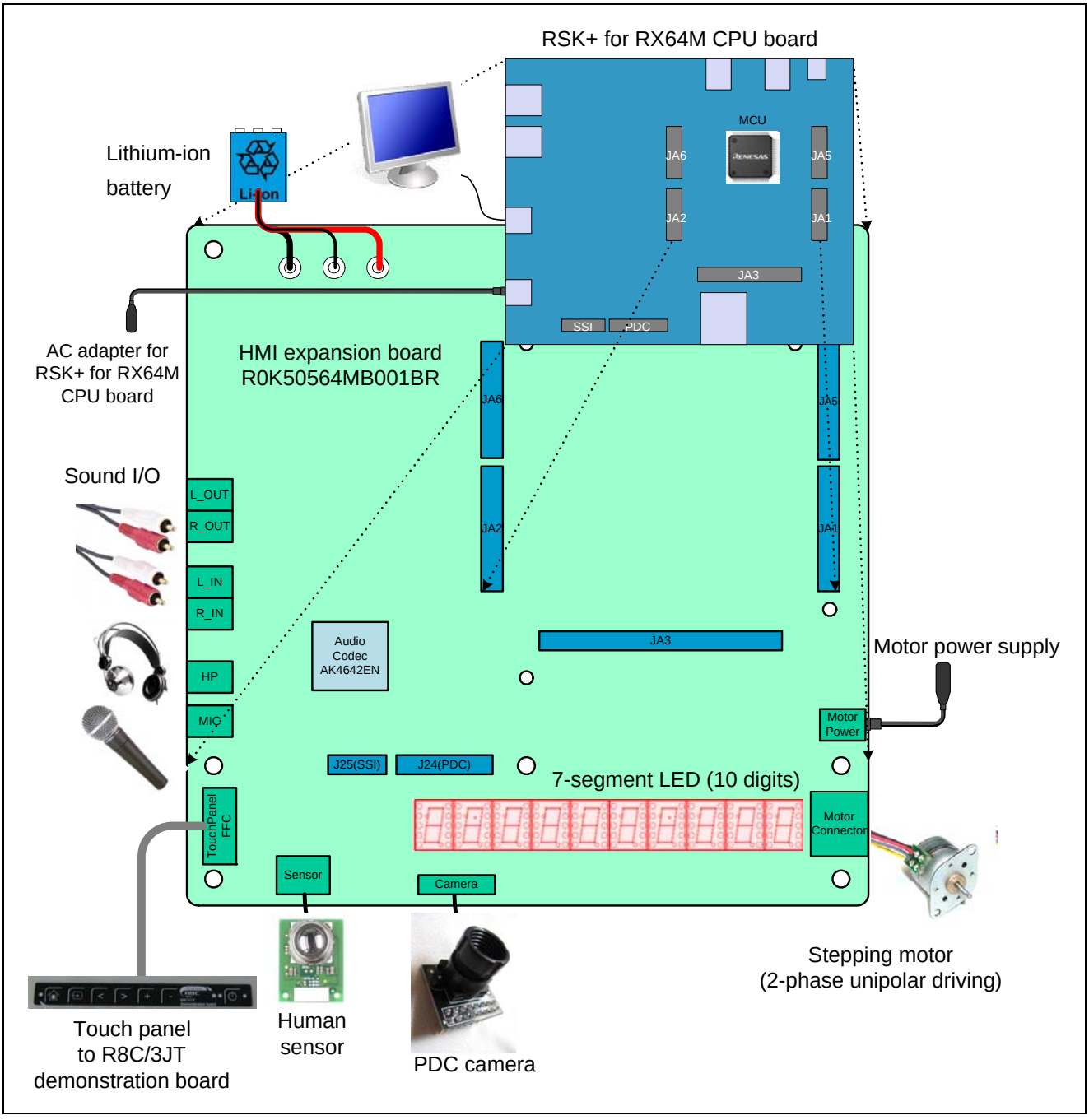

Figure 1.1 Example of System Configuration

1.3 External Specifications

Table 1.1 lists the External Specifications for the HMI expansion board.

Table 1.1 External Specifications

No.	Item	Description
1	Sound I/O interface	Includes a sound I/O interface with RX64M SSI • Includes Asahi Kasei AK4642EN as Audio Codec LSI - Input clock : 12.288MHz - Sampling rate : 48kHz/24kHz/16kHz/12kHz are supported • Supports dual systems for 16-bit stereo Input/output - Microphone, headphone (stereo mini-jack) : 1 for each - Line-in, line-out (RCA jack×2) : 1 set for each • Sound input data can be input to RX64M ADC (Selected by JP8)
2	LEDs	Includes 7-segment LEDs and individual LEDs • Includes 7-segment LEDs for 10 digits, which can be used to display characters • 4 user LEDs, LEDs for motor external power supply and charger IC/STAT
3	Motor control interface	Includes a stepping motor (2-phase unipolar driving) control interface • Includes a 6-pin connector for motor driver circuit and motor connection • Motor power supply connector is prepared, which can be switched by using the RSK power supply and jumper
4	Camera interface	Includes a camera interface which can be connected to PDC for image input • Includes 2.7 system power supply generator, a level shifter circuit, and a 16-pin DIP connector expecting that OmniVision OV7670 camera module is connected.
5	Non-contact thermal sensor	Includes OMRON Non-Contact Thermal Sensor D6T-44L-06 to be connected on I2C as a human sensor
6	eMMC	Includes the 8GB eMMC that controlled by RX64M MMCHI for Backward-compatible mode access. Note that this should be controlled exclusively from the SD card slot on RSK+ for RX64M CPU Board.
7	Touch panel interface	Includes a connector (8-pin FFC) for R8C/3JT touch panel demonstration board (R0K521336C0001BR)
8	USB battery charge controller	Includes a USB battery charge controller with RX64M USB Full-Speed(USBA) • Test pin (3-pin) is prepared to connect the lithium-ion battery • Lithium-ion battery charging function from VBUS (with R2A20057BX) • Power supply function from lithium-ion battery to VBUS
9	RSK interface	Includes the following connectors for RSK+ for RX64M CPU Board JA1/JA2(26-pin), JA3(50-pin), JA5/JA6(24-pin), PDC(20-pin), and SSI(12-pin)
10	Board specifications	• Dimensions: 180 mm×180 mm • Mounting form: 4-layer, double-sided (Thickness: 1.6mm) • Number of board: 1

1.4 System Block Diagram

Figure 1.2 shows the Example of System Configuration for the HMI expansion board.

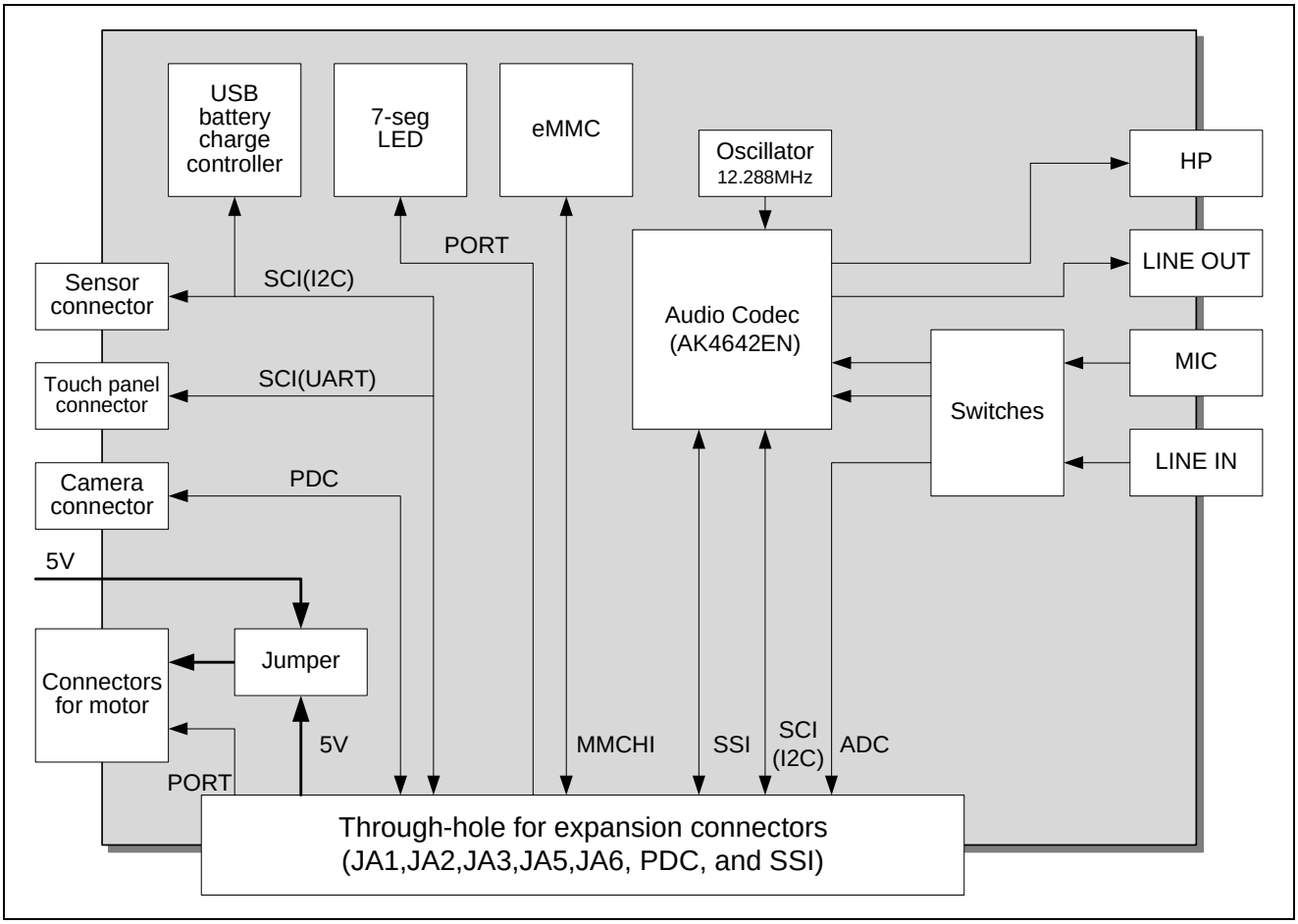

Figure 1.2 System Block Diagram

1.5 Absolute Maximum Ratings

Table 1.2 lists the Absolute Maximum Ratings for the HMI expansion board.

Table 1.2 Absolute Maximum Ratings

Symbol	Item	Rated Value	Remarks
5VCC	5V system power supply voltage	-0.5V to 6.0V	Vss reference
3VCC	3.3V system power supply voltage	-0.5V to 4.1V	Vss reference (Only for direct supply)
T_{opr}	Operating ambient temperature*	0°C to 50°C	Do not expose to condensation or corrosive gases.
T_{stg}	Storage ambient temperature*	-20°C to 60°C	Do not expose to condensation or corrosive gases.

[Note] * The ambient temperature is the air temperature immediate to the board.

1.6 Operating Conditions

Table 1.3 shows the Operating Conditions for the HMI expansion board.

Table 1.3 Operating Conditions

Symbol	Item	Rated Value	Remarks
5VCC	5V system power supply voltage	4.75V to 5.25V	The value is defined on the CPU board (Vss reference)
3VCC	3.3V system power supply voltage	3.0V to 3.6V	The value is defined on the CPU board (Vss reference)
−	Board maximum consumption current	Up to 1.5A	
T_{opr}	Operating ambient temperature*	0°C to 50°C	Do not expose to condensation or corrosive gases.

[Note] * The ambient temperature is the air temperature immediate to the board.

2. Functional Specifications

2.1 Function Overview

Table 2.1 lists the R0K50564MB001BR Function Modules.

Table 2.1 R0K50564MB001BR Function Modules

Section	Function	Description
2.2	Sound I/O Interface	Includes a sound I/O interface with dual system • Asahi Kasei AK4642EN is used as AudioCodec LSI • A 12.288MHz oscillator is included as a master clock 48kHz/24kHz/16kHz/12kHz are supported for sampling rate • Stereo mini jacks for mic input and headphone output • Stereo RCA jacks for line-in input and line-out output • Mic and line-in can be input to RX64M ADC2 and ADC3 (JP8 is used)
2.3	7-Segment LEDs and User LEDs	• 7-segment LEDs (Red): 10 (Can be used to display characters) • User LEDs: 4
2.4	Motor Control Interface	Includes a driver circuit and connectors for stepping motor (2-phase unipolar driving)
2.5	Camera Interface	Includes a camera interface which can be connected to PDC for image input • OmniVision OV7670 camera module can be connected • 2.7 system power supply generator for camera module and level shifter circuit • A 16-pin DIP connector
2.6	Non-Contact Thermal Sensor	Includes a non-contact thermal sensor interface as a human sensor • Omron D6T-44L-06 can be connected • I2C interface level shifter circuit
2.7	eMMC	Includes an eMMC device with 8GB
2.8	Touch Panel Interface	Includes a 8-pin FFC connector for R8C/3JT touch panel demonstration board (R0K521336C0001BR)
2.9	USB Battery Charge ControllerUSB Battery Charge Controller	Includes a USB battery charging function with RX64M USB Full-Speed (USBA) • Lithium-ion battery charging function from VBUS (with R2A20057BX) • Power supply function from lithium-ion battery to VBUS
2.10	Power Supply Wiring	3.3V and 5V system power supply and ground wiring from JA1,JA2 and JA6 connector
-	Operational Specifications	Chapter 3 describes details of connectors, jumpers, and LEDs.

2.2 Sound I/O Interface

The R0K50564MB001BR includes Asahi Kasei Audio Codec LSI AK4642EN to support the sound I/O function. The RX64M SCIg Ch2 is used to control the Audio Codec LSI in simple I2C mode, and the SSI is used to transfer the sound data. The port P51 is used to control power-down mode, and the port PB7 is used for BEEP input. The potentiometer (VR1) is also included in the R0K50564MB001BR for BEEP sound control.

On the R0K50564MB001BR, the sound data can be input to the RX64M ADC by setting JP8 because ADC2 and ADC3 used for sound data input are also connected to the USB battery charge controller.

Figure 2.1 shows the Sound I/O Interface Block Diagram.

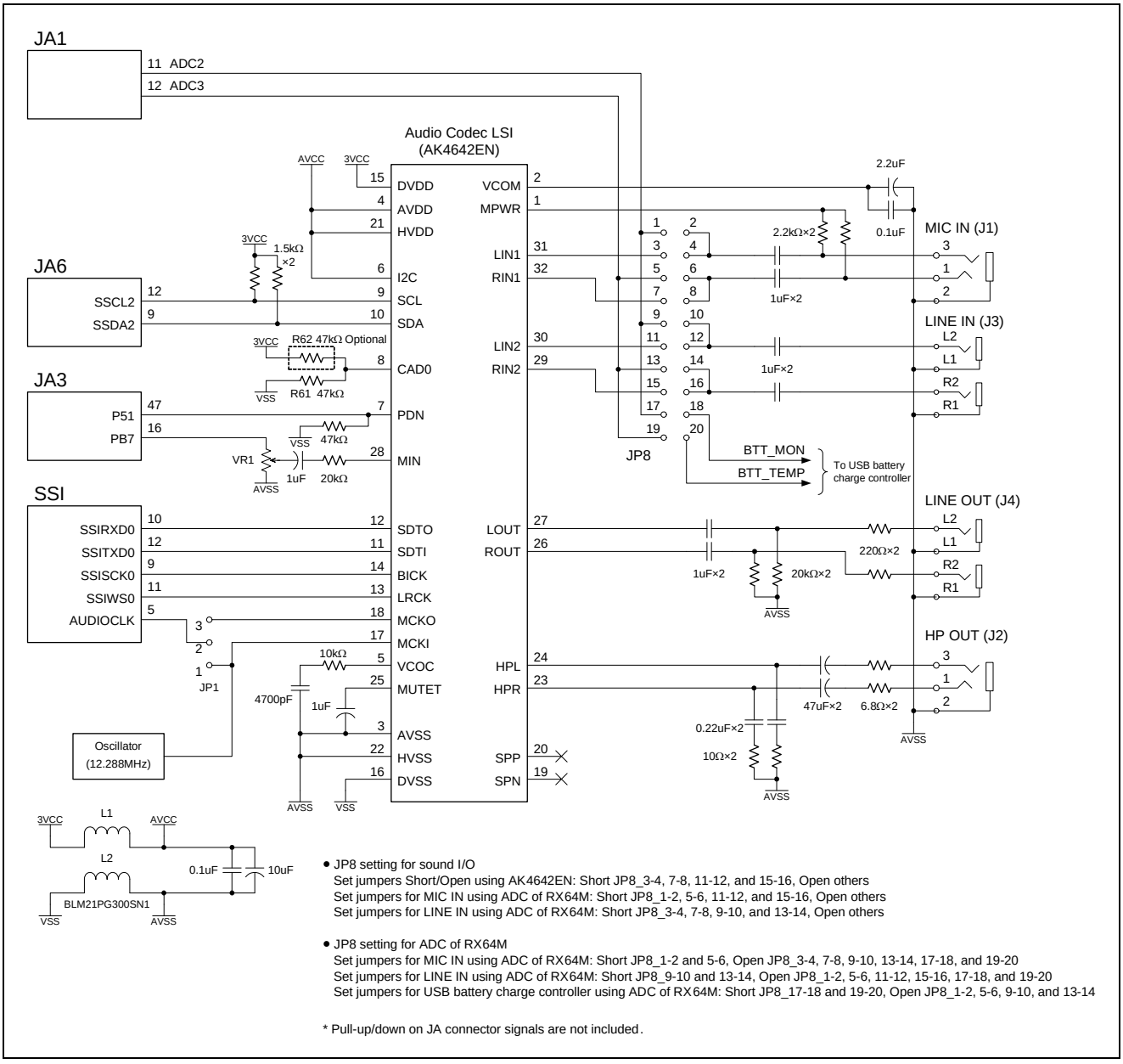

Figure 2.1 Sound I/O Interface Block Diagram

2.3 7-Segment LEDs and User LEDs

The R0K50564MB001BR includes ten 7-segment LEDs with a total of 18 general ports from the application header JA3 and four user LEDs with general ports from JA2 and JA6.

Figure2.2 shows the Block Diagram for 7-Segment LEDs and User LEDs.

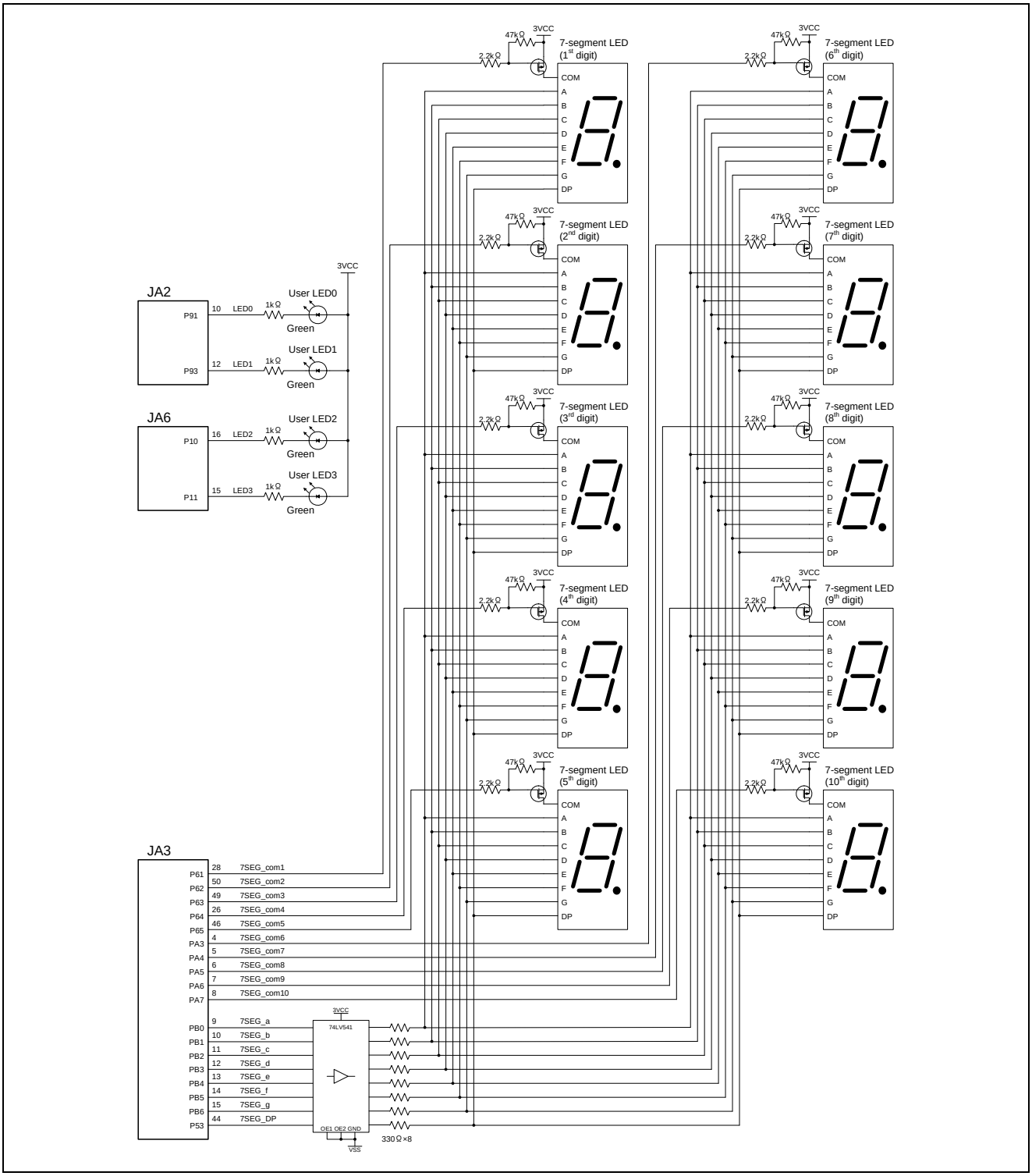

Figure2.2 Block Diagram for 7-Segment LEDs and User LEDs

2.4 Motor Control Interface

The R0K50564MB001BR includes the drive circuit and the motor connector J7 (6-pin) to control the stepping motor (2-phase unipolar driving). The RX64M MTU3 Ch7 (PA1, PA2, P66, and P67) is used to control the motor. The power supply (5V) for motor drive can be supplied by selecting either the application header JA1-1 or the external power supply connector J8 at JP4 for power supply selection.

Figure2.3 shows the Motor Control Interface Block Diagram.

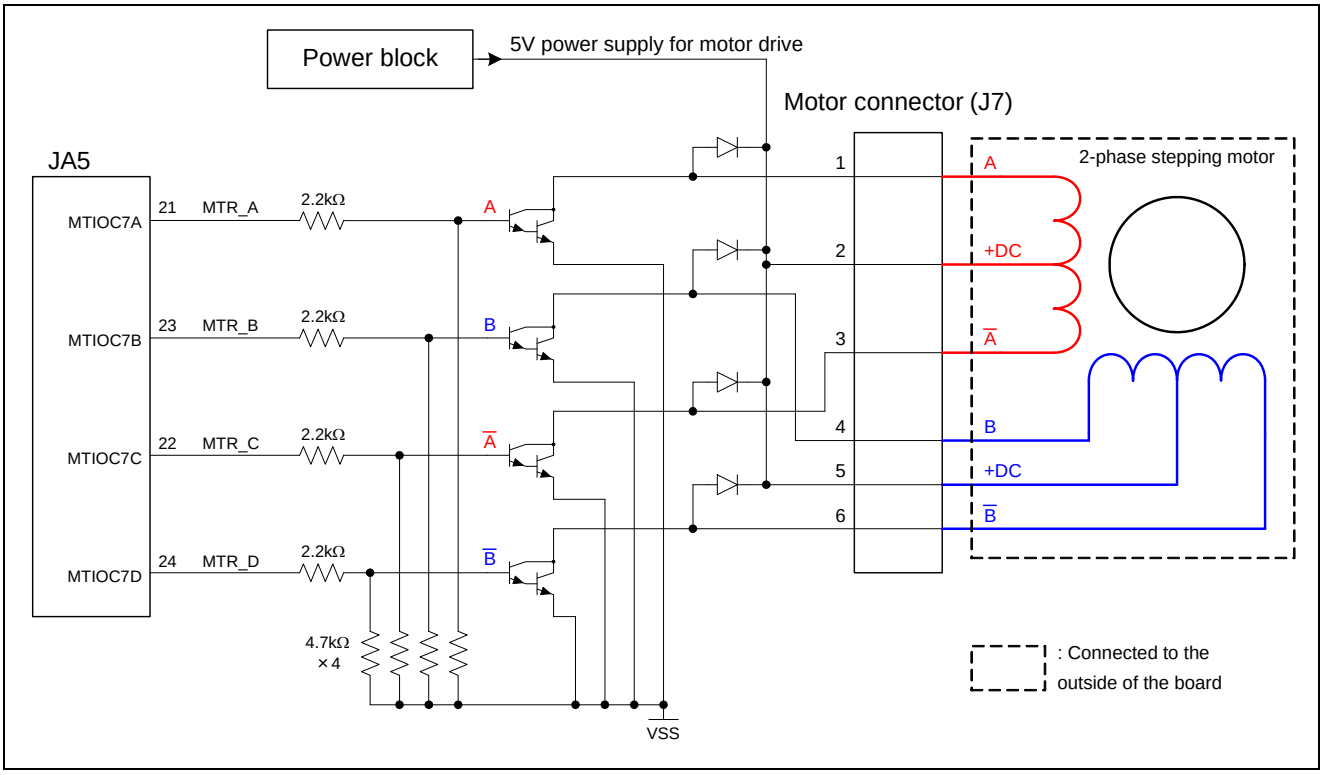

Figure2.3 Motor Control Interface Block Diagram

2.5 Camera Interface

The R0K50564MB001BR includes the interface to connect a camera for 8-bit parallel data output and the camera connector (J9). OV7670 camera module is expected to be connected, and the power supply for camera drive (2.75V) is generated by using the regulator from 5VCC power supply. RX64M SCI6 in simplified I2C mode is used to control the camera module, and PDC is used for data input. However, different voltages are used, so a bus switch is inserted as a level shifter between them.

Figure2.4 shows the Camera Interface Block Diagram on R0K50564MB001BR.

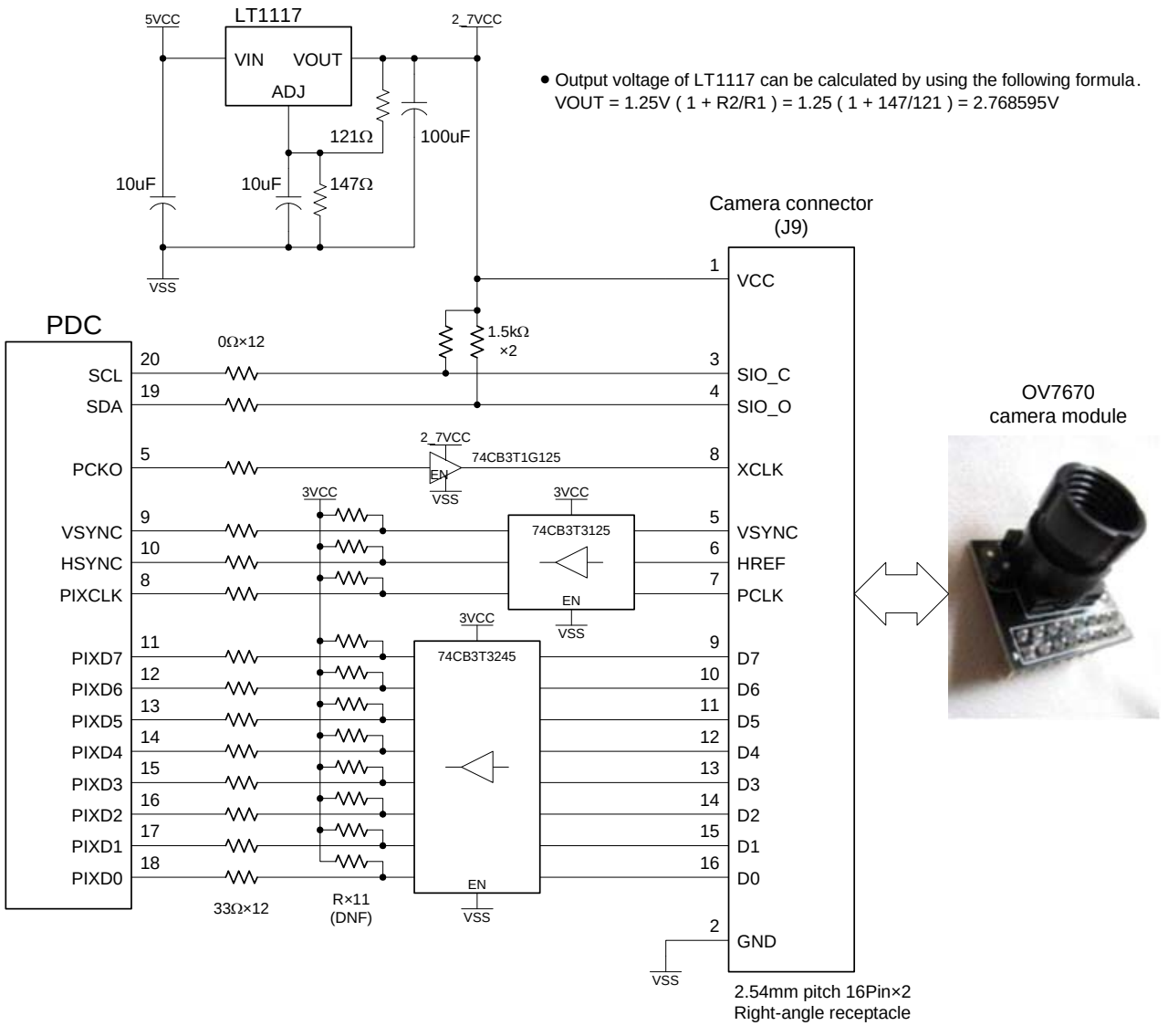

Figure2.4 Camera Interface Block Diagram

2.6 Non-Contact Thermal Sensor

The R0K50564MB001BR includes the sensor connector to connect the MEMS non-contact thermal sensor (OMRON D6T-44L-06). The 5VCC power supplied from the RSK+ for RX64M CPU Board is used for the sensor drive power supply (5V), and the RX64M SCIg Ch7 is used to control the sensor in simplified I2C mode. Because this sensor uses 5V operation, a level shifter circuit is inserted between the sensor and the RX64M. The SCIg Ch7 is also connected to the touch panel interface and the USB battery charge control circuit. The USB battery charge controller can be applied at the same time because it is used in simple I2C mode, but the touch panel interface cannot be applied at the same time because it is used in UART mode. Either JP5 or JP6 should be selected to use the touch panel interface.
Figure2.5 shows the Non-Contact Thermal Sensor Block Diagram on R0K50564MB001BR.

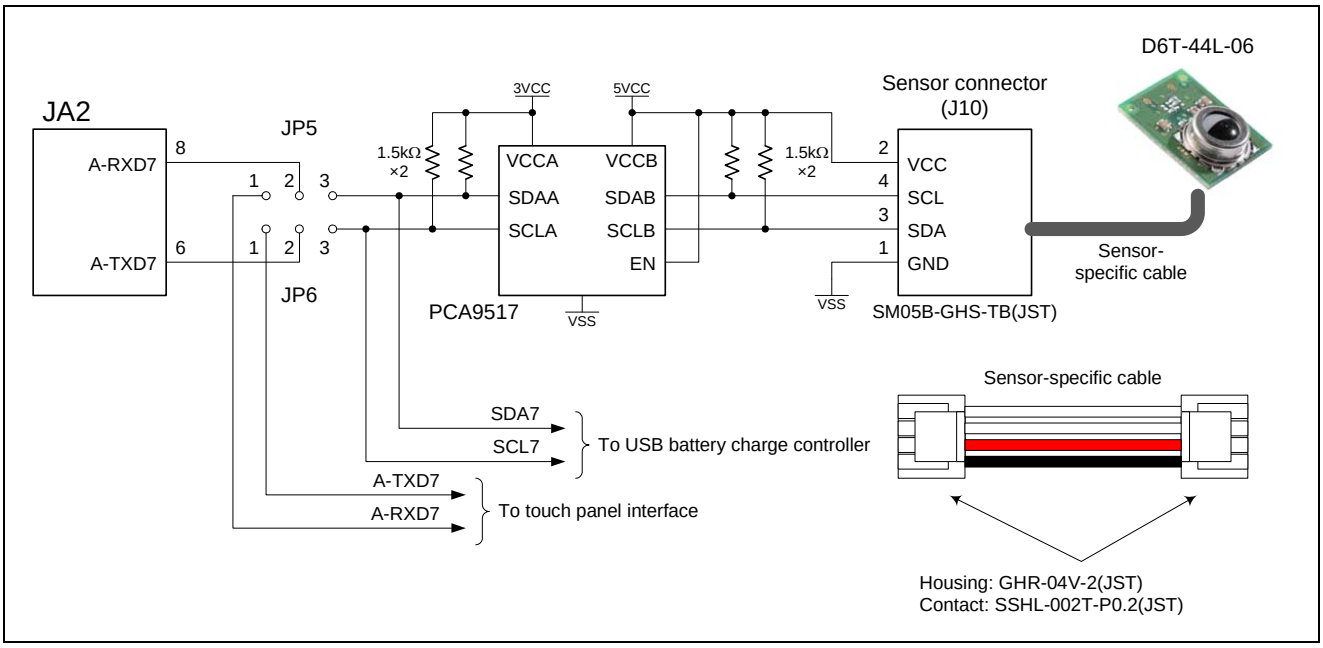

Figure2.5 Non-Contact Thermal Sensor Block Diagram

2.7 eMMC

The R0K50564MB001BR includes one eMMC controlled by the RX64M MMCHI. Please note that the RX64M MMCHI control signals cannot be used with the SD card slot and the external bus on the RSK+ for RX64M CPU Board at the same time because it is multiplexed with the SDHI control signals and the external bus signals.
Figure2.6 shows the eMMC Block Diagram.

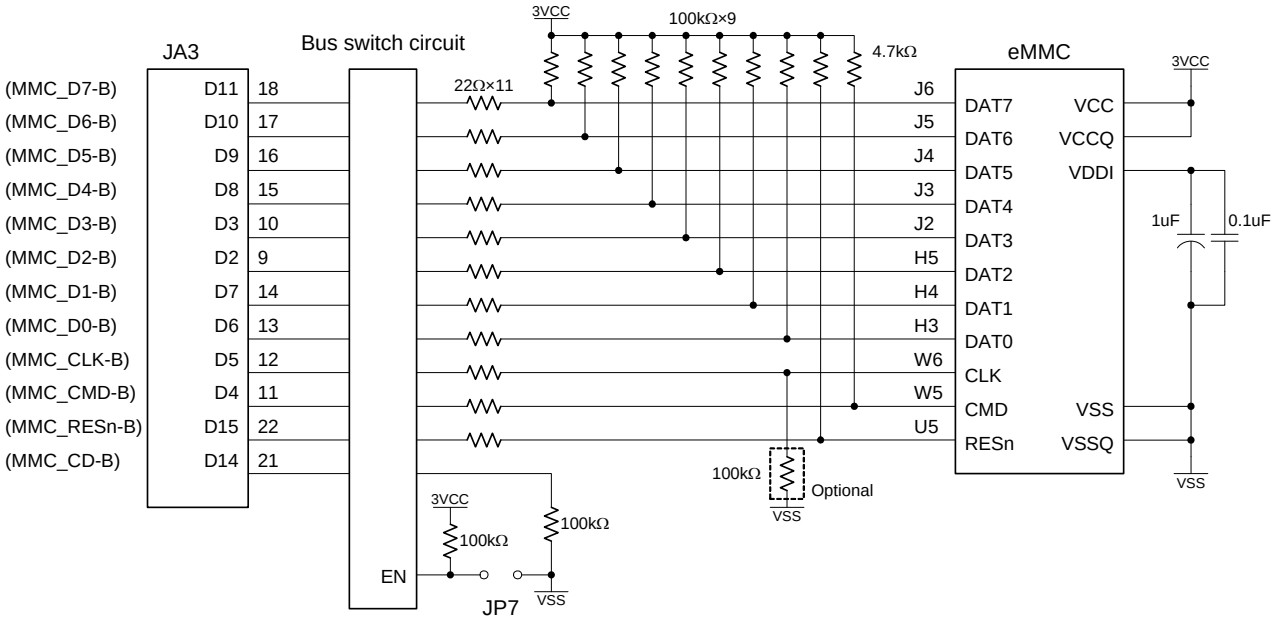

* The eMMC signals should pass through the bus switch circuit controlled by JP7 to enable all signals to be concurrently connected/disconnected.
(This bus switch uses SH74CB3Q3245 and SH74CB3Q3125, and short JP6 when the eMMC is used.)

Figure2.6 eMMC Block Diagram

2.8 Touch Panel Interface

The R0K50564MB001BR includes the 8-pin FFC type connector (J11) to connect the R8C/3JT touch panel demonstration board (TV type). The RX64M AD0 is used for analog input from the touch panel, and the RX64M SCIg Ch7 is used to communicate with the R8C/3JT in UART mode. The SCIg Ch7 is also connected to the non-contact thermal sensor and the USB battery charge control circuit, so the 8-pin FFC type connector (J11) cannot be used with these devices at the same time.

Figure2.7 shows the Touch Panel Interface Block Diagram.

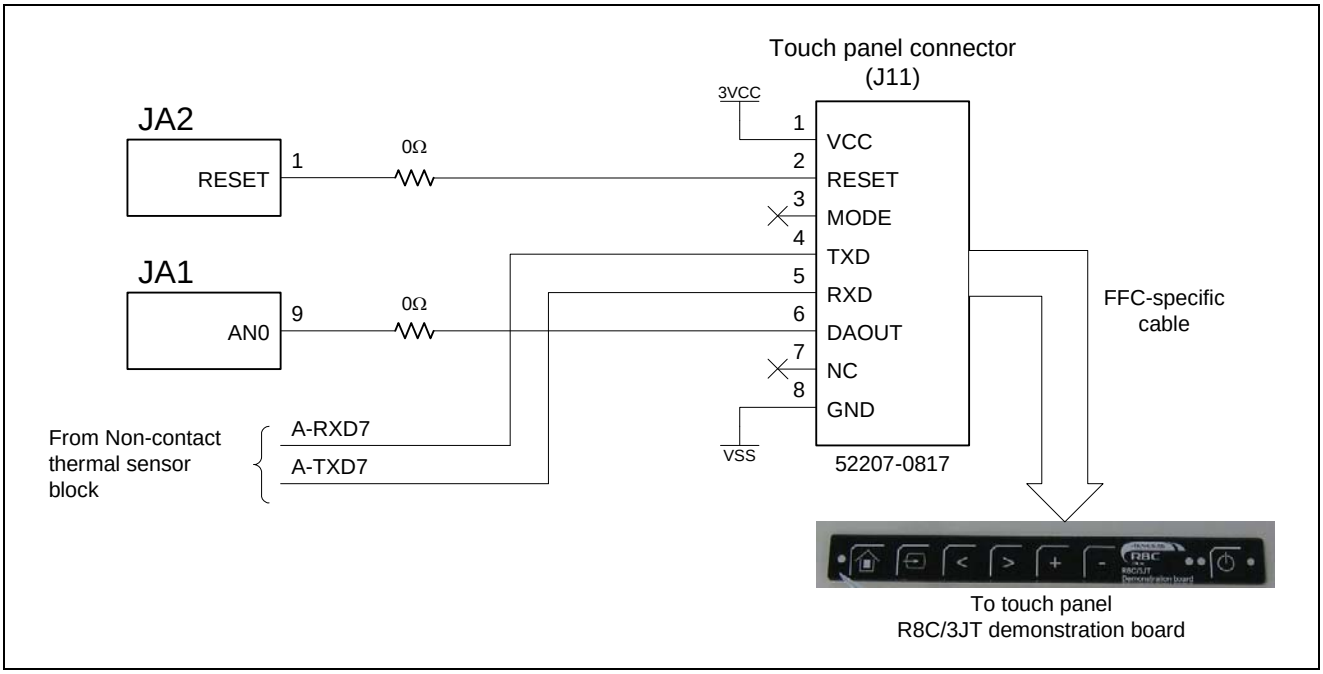

Figure2.7 Touch Panel Interface Block Diagram

2.9 USB Battery Charge Controller

The R0K50564MB001BR supports the battery charging function and the power supply function to VBUS using the RX64M USB Full-Speed (USBA) which corresponds to the Battery Charging Class. The USB Full-Speed ports on the RSK+ for RX64M CPU Board are used to evaluate the lithium-ion battery charging function from VBUS and the VBUS power supply function from the lithium-ion battery by using the VBUS signal from the USB Hi-Speed ports via the application header JA6. The battery charger IC includes the R2A20057BX, and the RX64M SCIg Ch7 is used in simplified I2C mode to control the charger IC. The SCIg Ch7 is also connected to the non-contact thermal sensor and the touch panel interface, but the latter cannot be used at the same time because it is used in UART mode. ADC2 and ADC3 are used to monitor the battery status and also to input the sound data. The JP8 is used to select either for monitoring battery status or inputting sound data.

Figure2.8 the USB Battery Charge Controller Block Diagram.

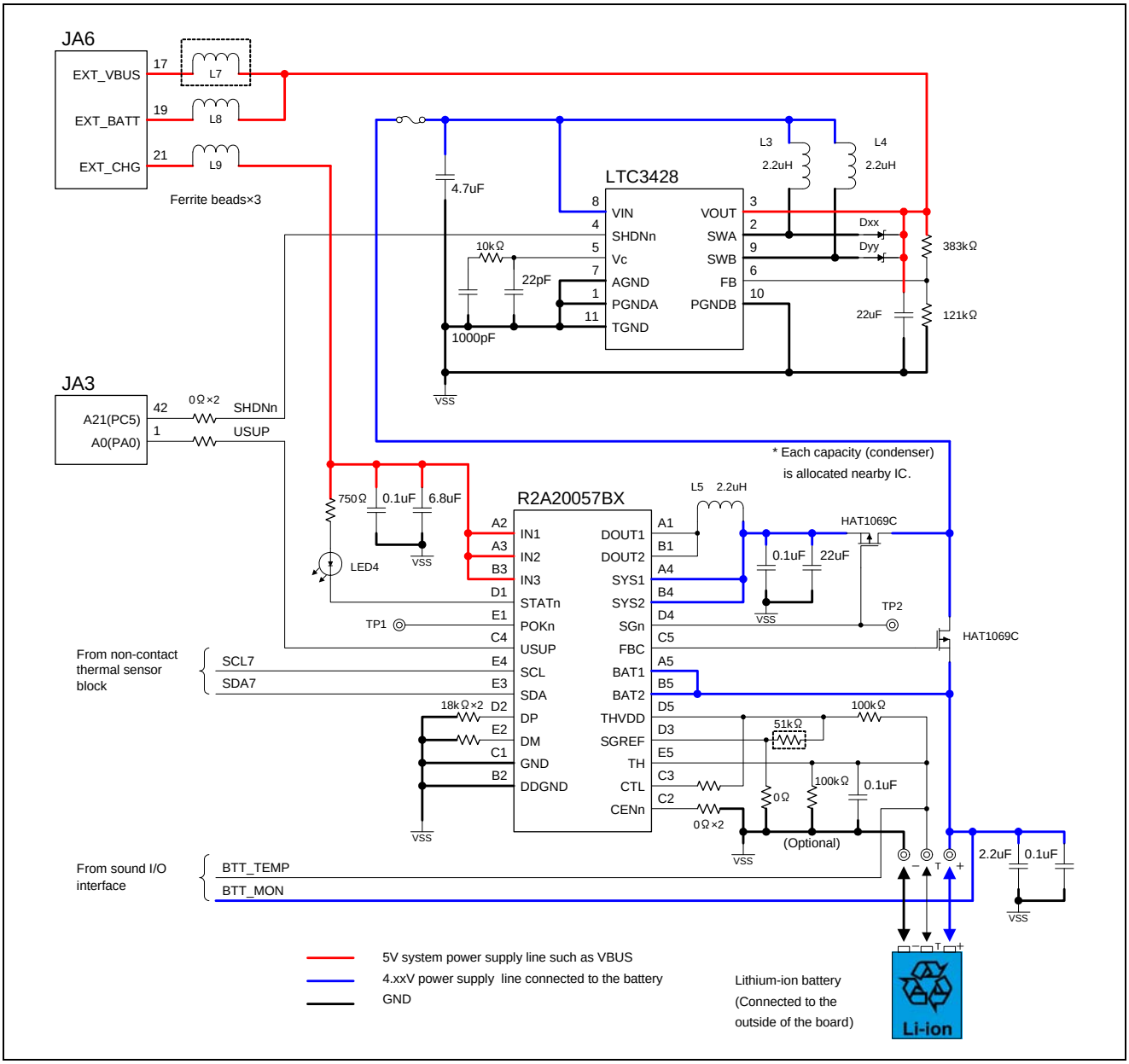

Figure2.8 USB Battery Charge Controller Block Diagram

2.10 Power Supply Wiring

3.3V and 5V are supplied from the RSK+ for RX64M CPU Board via JA1,JA2 and JA3 connector. The 3.3V power is supplied to all the interfaces and devices except the motor control interface, and the 5V power is supplied to the motor control interface, the non-contact thermal sensor, and the camera interface. The power supplied to the camera interface is used to generate 2.75V power supply for camera module driver. In the motor control interface, either the 5V power supplied from JA1 connector or 5V input from the external power supply connector J8 is selected at JP4 to be used as 5V power supply for motor drive.

Figure2.9 shows the Power Supply Wiring on R0K50564MB001BR.

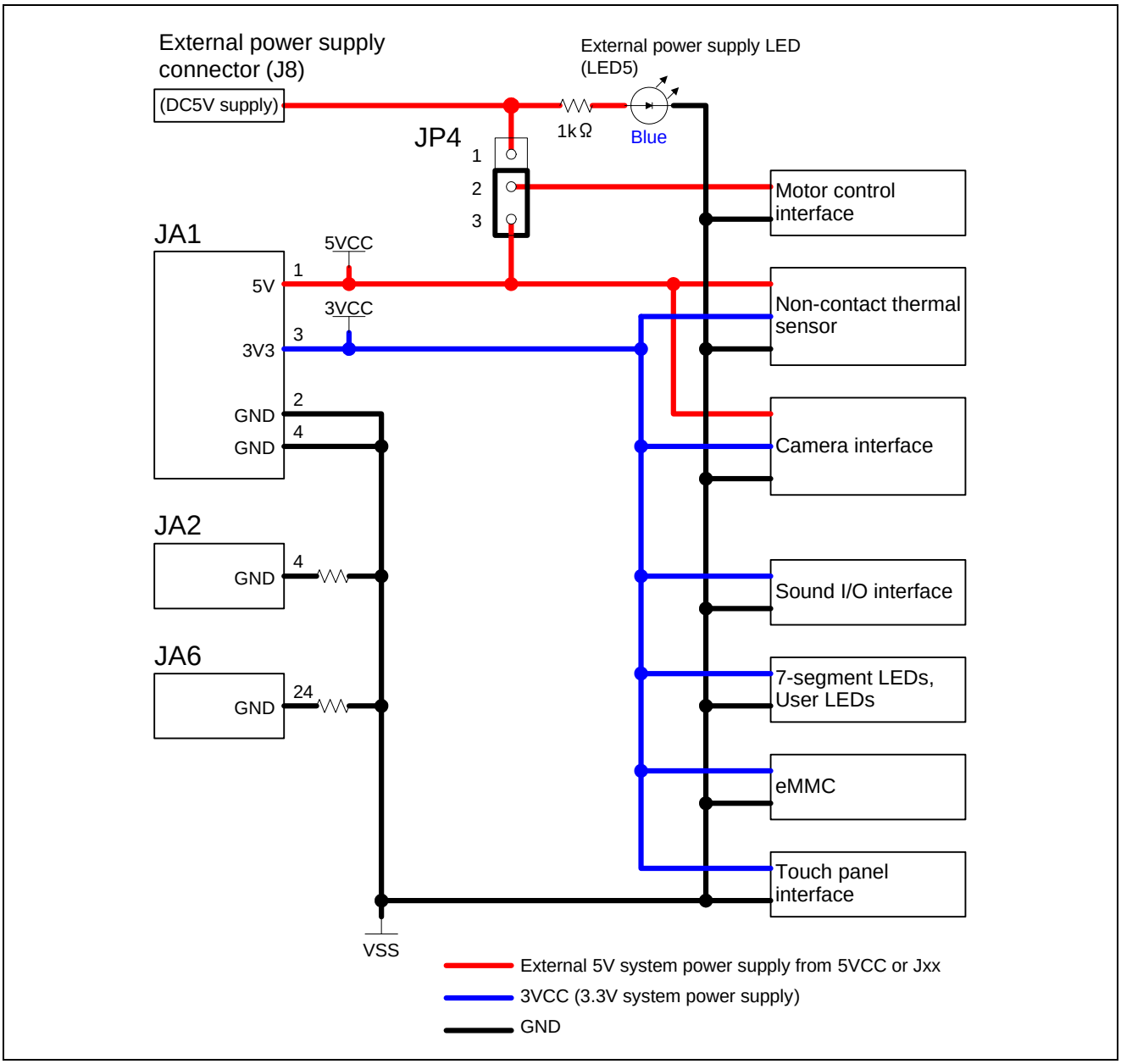

Figure2.9 Power Supply Wiring

3. Operational Specifications

3.1 Connector Overview

Figure 3.1 shows the R0K50564MB001BR Connector Assignments.

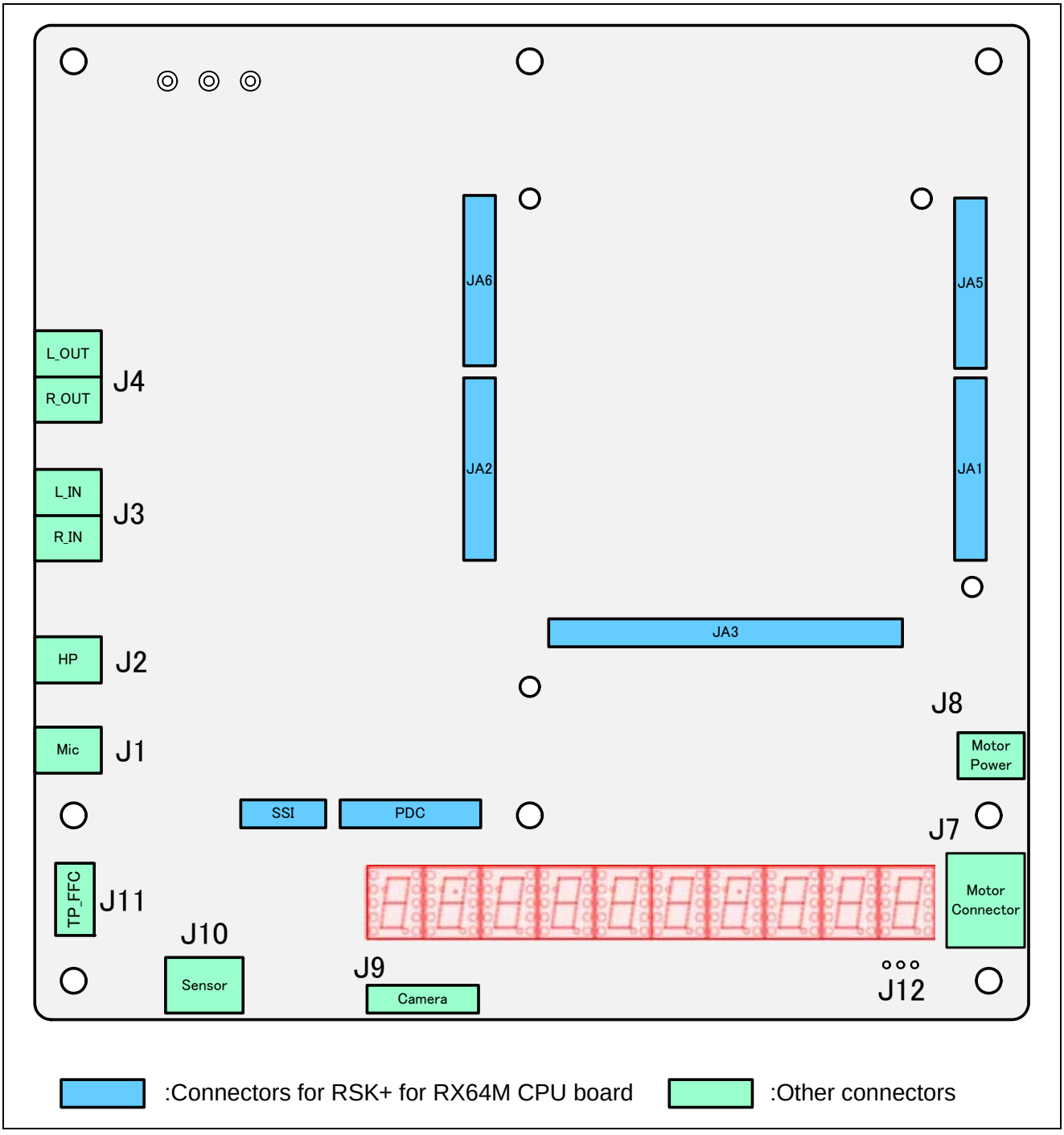

Figure 3.1 R0K50564MB001BR Connector Assignments

3.1.1 RSK+ for RX64M CPU Board Connectors (JA1 to JA3, JA5, JA6, SSI, and PDC)

The R0K50564MB001BR has RSK connectors of the application headers (JA1 to JA3, JA5, and JA6) and connectors of SSI, and PDC. These connectors can be used by connecting with the RSK+ for RX64M CPU Board.
Figure 3.2 shows the Pin Assignments for RSK Connectors (JA1 to JA3, JA5, JA6, SSI, and PDC). Table 3.1 to Table 3.7 list the pin names for RSK Connectors (JA1 to JA3, JA5, JA6, SSI, and PDC).

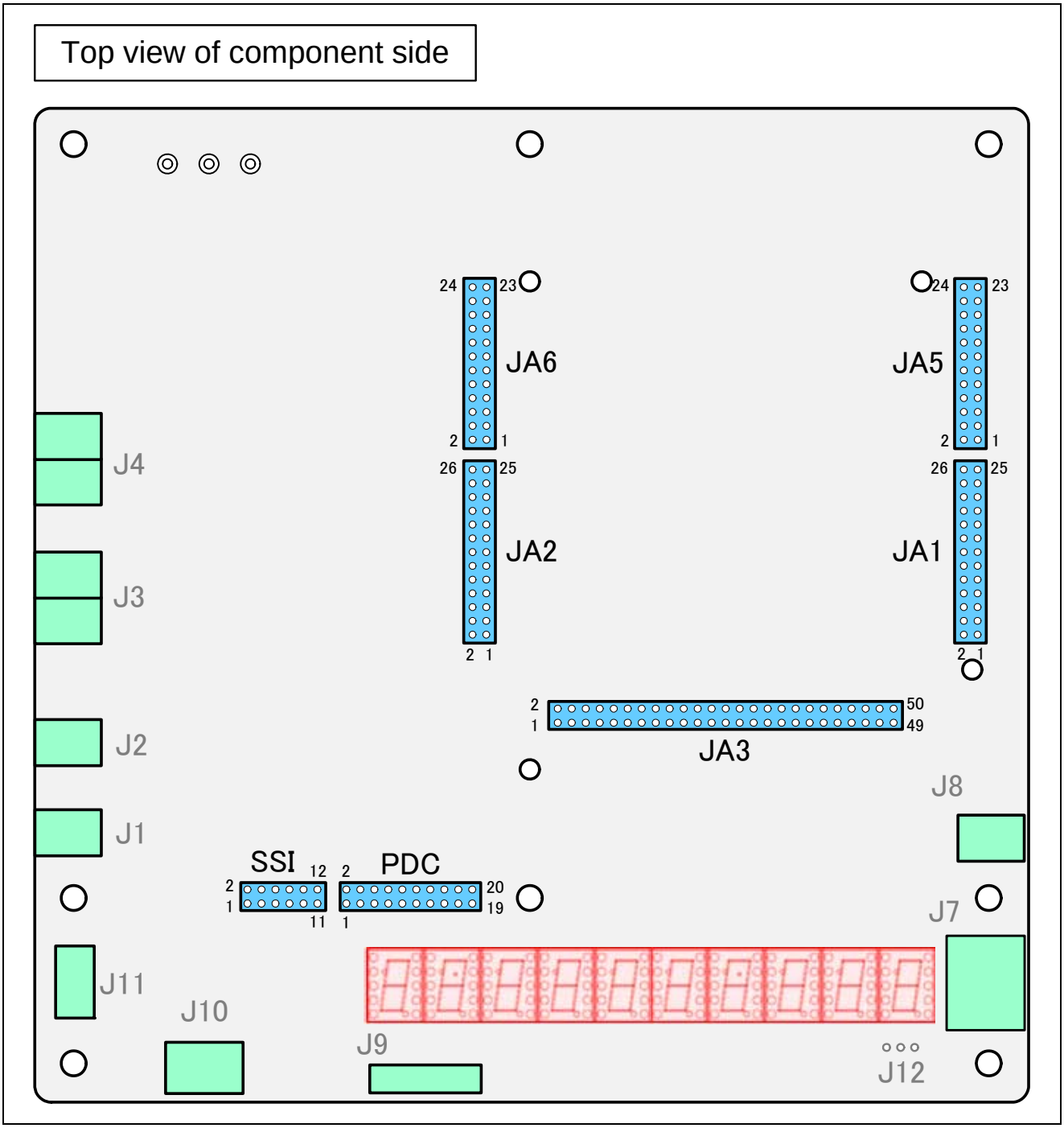

Figure 3.2 Pin Assignments for RSK Connectors (JA1 to JA3, JA5, JA6, SSI, and PDC)

Table 3.1 Pins for Application Header (JA1)

Pin No.	Signal Name (Port)	Usage/Destination	Pin No.	Signal Name (Port)	Usage/Destination
1	5V	5VCC	2	GND	GND
3	3V3	3VCC	4	GND	GND
5	AVCC	-	6	AVSS	-
7	AVREF	-	8	ADTRG	-
9	ADC0 (P40)	AD input for touch panel	10	ADC1	-
11	ADC2 (P42)	Sound I/O (L) or USB battery charge control voltage monitor	12	ADC3 (P43)	Sound I/O (R) or USB battery charge control thermal monitor
13	DA0	-	14	DA1	-
15	IO_0	-	16	IO_1	-
17	IO_2	-	18	IO_3	-
19	IO_4	-	20	IO_5	-
21	IO_6	-	22	IO_7	-
23	IRQ3/IRQAEC/M2_HSIN0	-	24	IIC_EX	-
25	IIC_SDA	-	26	IIC_SCL	-

[Note] "-" in Usage/Destination column means that the pins are not used.

Table 3.2 Pins for Application Header (JA2)

Pin No.	Signal Name (Port)	Usage/Destination	Pin No.	Signal Name (Port)	Usage/Destination
1	RESET	Device reset	2	EXTAL	-
3	NMI	-	4	Vss1	GND via 0Ω resister
5	WDT_OVF	-	6	SCIaTX (P90)*1	Non-contact thermal sensor, USB battery control and serial communication with touch panel (I2C/UART)
7	IRQ0/WKUP/M1_HSIN0	-	8	SCIaRX (P92)*1	Non-contact thermal sensor, USB battery control and serial communication with touch panel (I2C/UART)
9	IRQ1/M1_HSIN1	-	10	SCIaCK (P91)*1	LED0 control
11	M1_UD	-	12	CTSRTS (P93)*1	LED1 control
13	M1_Up	-	14	M1_Un	-
15	M1_Vp	-	16	M1_Vn	-
17	M1_Wp	-	18	M1_Wn	-
19	TimerOut	-	20	TimerOut	-
21	TimerIn	-	22	TimerIn	-
23	IRQ2/M1_EncZ/M1_HSIN2	-	24	M1_POE	-
25	M1_TRCCLK	-	26	M1_TRDCLK	-

[Note] "-" in Usage/Destination column means that the pins are not used. *1 in Signal Name (Port) column indicates that the settings on the RSK+ for RX64M CPU Board should be changed when appropriate functions are used. Refer to Section 3.3 for details about setting change.

Table 3.3 Pins for Application Header (JA3)

Pin No.	Signal Name (Port)	Usage/Destination	Pin No.	Signal Name (Port)	Usage/Destination
1	A0 (PA0)	Port for USB battery charge control	2	A1	-
3	A2	-	4	A3 (PA3)	Port for 7-seg LED
5	A4 (PA4)	Port for 7-seg LED	6	A5 (PA5)	Port for 7-seg LED
7	A6 (PA6)	Port for 7-seg LED	8	A7 (PA7)	Port for 7-seg LED
9	A8 (PB0)	Port for 7-seg LED	10	A9 (PB1)	Port for 7-seg LED
11	A10 (PB2)	Port for 7-seg LED	12	A11 (PB3)	Port for 7-seg LED
13	A12 (PB4)	Port for 7-seg LED	14	A13 (PB5)	Port for 7-seg LED
15	A14 (PB6)	Port for 7-seg LED	16	A15 (PB7)	Port for sound I/O
17	D0	-	18	D1	-
19	D2	-	20	D3	-
21	D4	-	22	D5	-
23	D6	-	24	D7	-
25	RDn	-	26	WR/SDWE (P64)*1	Port for 7-seg LED
27	CSa	-	28	CSb (P61)*1	Port for 7-seg LED
29	D8	-	30	D9	-
31	D10	-	32	D11	-
33	D12	-	34	D13	-
35	D14	-	36	D15	-
37	A16	-	38	A17	-
39	A18	-	40	A19	-
41	A20	-	42	A21 (PC5)*1	Port for USB battery charge control
43	A22 (PC6)	-	44	SDCLK/BCLK (P53)*1	Port for 7-seg LED
45	CSc/Wait	-	46	ALE/SDCKE (P65)*1	Port for 7-seg LED
47	HWRn/DQM1 (P51)*1	Port for sound I/O	48	LWRn/DQM0	-
49	CAS (P63)	Port for 7-seg LED	50	RAS (P62)	Port for 7-seg LED

[Note] "-" in Usage/Destination column means that the pins are not used. *1 in Signal Name (Port) column indicates that the settings on the RSK+ for RX64M CPU Board should be changed when appropriate functions are used. Refer to Section 3.3 for details about setting change.

Table 3.4 Pins for Application Header (JA5)

Pin No.	Signal Name (Port)	Usage/Destination	Pin No.	Signal Name (Port)	Usage/Destination
1	ADC4	-	2	ADC5	-
3	ADC6	-	4	ADC7	-
5	CAN1TX	-	6	CAN1RX	-
7	CAN2TX	-	8	CAN2RX	-
9	IRQ4/M2_EncZ/M2 HSIN1	-	10	IRQ5/M2_HSIN2	-
11	M2_UD	-	12	M2_Uin	-
13	M2_Vin	-	14	M2_Win	-
15	M2_Toggle	-	16	M2_POE	-
17	M2_TRCCLK	-	18	M2_TRDCLK	-
19	M2_Up	-	20	M2_Un	-
21	M2_Vp (PA2)*1	Timer output for motor	22	M2_Vn (P67)*1	Timer output for motor
23	M2_Wp (PA1)*1	Timer output for motor	24	M2_Wn (P66)*1	Timer output for motor

[Note] "-" in Usage/Destination column means that the pins are not used. *1 in Signal Name (Port) column indicates that the settings on the RSK+ for RX64M CPU Board should be changed when appropriate functions are used. Refer to Section 3.3 for details about setting change.

Table 3.5 Pins for Application Header (JA6)

Pin No.	Signal Name (Port)	Usage/Destination	Pin No.	Signal Name (Port)	Usage/Destination
1	DREQ	-	2	DACK	-
3	TEND	-	4	STBYn	-
5	RS232TX	-	6	RS232RX	-
7	SCIbRX	-	8	SCIbTX	-
9	SCIcTX (P50)*1	I2C for sound I/O control	10	SCIbCK	-
11	SCIcCK	-	12	SCIcRX (P52)*1	I2C for sound I/O control
13	M1_Toggle	-	14	M1_Uin	-
15	M1_Vin (P11)*1	LED3 control	16	M1_Win (P10)*1	LED2 control
17	Reserved/ USB_VBUS*1	USB battery charge control	18	Reserved	-
19	Reserved/ USB_BATT*1	USB battery charge control	20	Reserved	-
21	Reserved/ USB_CHG*1	USB battery charge control	22	Reserved	-
23	Unregulated_VCC	-	24	VSS	GND via 0-ohm resister

[Note] "-" in Usage/Destination column means that the pins are not used. *1 in Signal Name (Port) column indicates that the settings on the RSK+ for RX64M CPU Board should be changed when appropriate functions are used. Refer to Section 3.3 for details about setting change.

Table 3.6 Pins for SSI Connector

Pin No.	Signal Name (Port)	Usage/Destination	Pin No.	Signal Name (Port)	Usage/Destination
1	5V	-	2	3V3	-
3	GND	-	4	GND	-
5	AUDIOCLK (P22)*1	Sound I/O data transfer	6	GND	-
7	GND	-	8	NC	-
9	SSISCK0 (P23)*1	Sound I/O data transfer	10	SSIRXD0 (P20)*1	Sound I/O data transfer
11	SSIWS0 (P21)*1	Sound I/O data transfer	12	SSITXD0 (P17)*1	Sound I/O data transfer

[Note] "-" in Usage/Destination column means that the pins are not used. *1 in Signal Name (Port) column indicates that the settings on the RSK+ for RX64M CPU Board should be changed when appropriate functions are used. Refer to Section 3.3 for details about setting change.

Table 3.7 Pins for PDC Connector

Pin No.	Signal Name (Port)	Usage/Destination	Pin No.	Signal Name (Port)	Usage/Destination
1	5V	-	2	3V3	-
3	GND	-	4	GND	-
5	PCKO (P33)*1	Camera interface	6	RESn	Camera interface
7	GND	-	8	PIXCLK (P24)	Camera interface
9	VSYNC (P32)*1	Camera interface	10	HSYNC (P25)	Camera interface
11	PIXD7 (P23)*1	Camera interface	12	PIXD6 (P22)*1	Camera interface
13	PIXD5 (P21)*1	Camera interface	14	PIXD4 (P20)*1	Camera interface
15	PIXD3 (P17)*1	Camera interface	16	PIXD2 (P87	Camera interface
17	PIXD1 (P86)	Camera interface	18	PIXD0 (P15)*1	Camera interface
19	SDA (P00)	Camera interface	20	SCL (P01)	Camera interface

[Note] "-" in Usage/Destination column means that the pins are not used. *1 in Signal Name (Port) column indicates that the settings on the RSK+ for RX64M CPU Board should be changed when appropriate functions are used. Refer to Section 3.3 for details about setting change.

3.1.2 Sound I/O Connectors (J1, J2, J3, and J4)

The R0K50564MB001BR has sound I/O connectors (J1, J2, J3, and J4). Table 3.8 lists the Sound I/O Connectors.

Table 3.8 Sound I/O Connectors

No.	Connector Name	Remarks
J1	MIC-IN stereo mini jack	
J2	HP-OUT stereo mini jack	
J3	LINE-IN stereo RCA jack	
J4	LINE-OUT stereo RCA jack	

Figure 3.3 shows the Pin Assignments for Sound I/O Connectors, and Table 3.9 to Table 3.12 list the pin names for each connector.

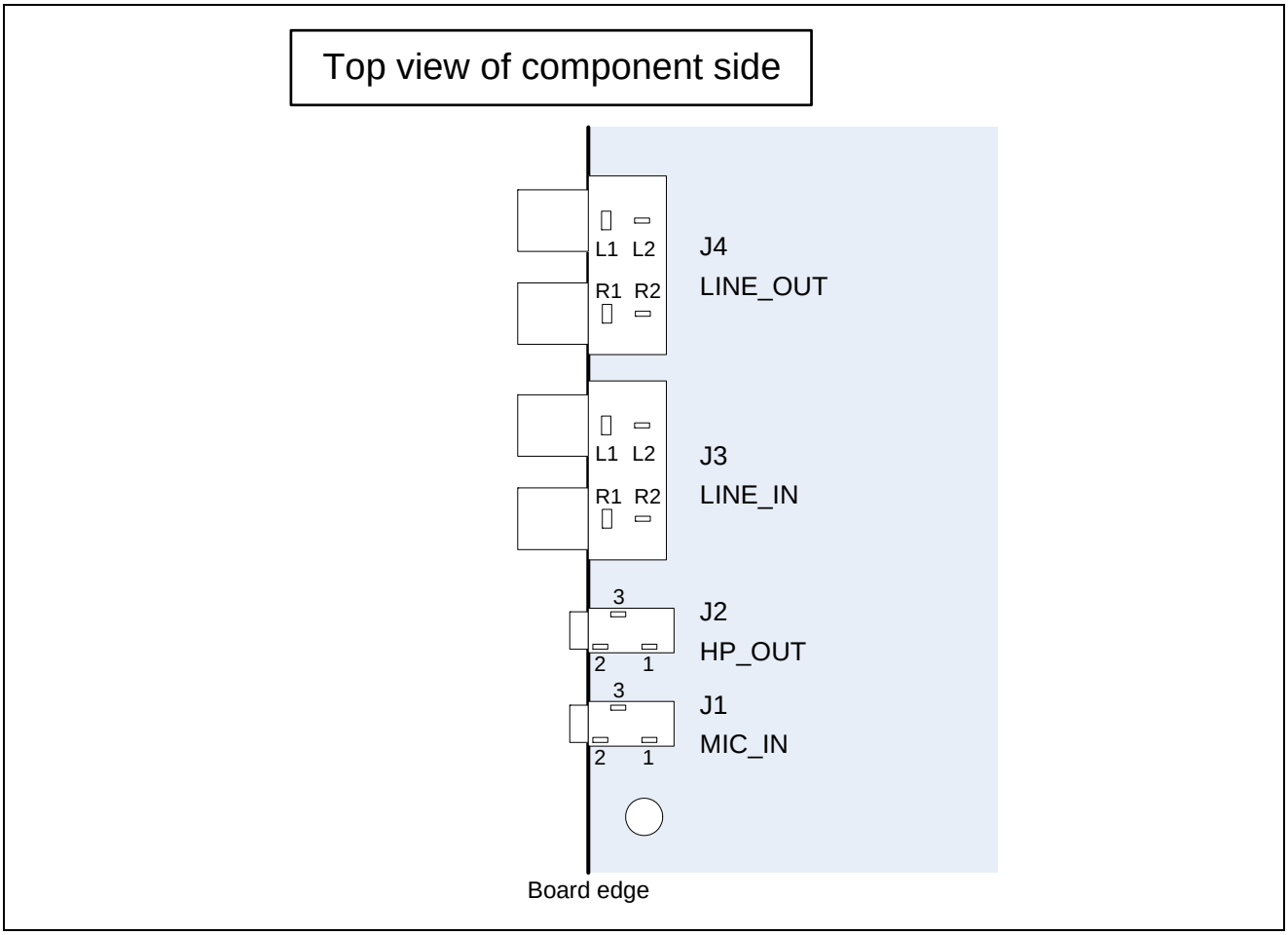

Figure 3.3 Pin Assignments for Sound I/O Connectors

Table 3.9 Pins for MIC-IN Stereo Mini Jack (J1)

Pin No.	Signal Name	Pin No.	Signal Name
1	RIN1	2	AVSS
3	LIN1		

Table 3.10 Pins for HP-OUT Stereo Mini Jack (J2)

Pin No.	Signal Name	Pin No.	Signal Name
1	HPR	2	AVSS
3	HPL		

Table 3.11 Pins for LINE-IN Stereo RCA Jack (J3)

Pin No.	Signal Name	Pin No.	Signal Name
R1	AVSS	R2	RIN2
L1	AVSS	L2	LIN2

Table 3.12 Pins for LINE-OUT Stereo RCA Jack (J4)

Pin No.	Signal Name	Pin No.	Signal Name
R1	AVSS	R2	ROUT
L1	AVSS	L2	LOUT

3.1.3 Motor Connector (J7)

The R0K50564MB001BR has a motor connector (J7) for stepping motor connection. Figure 3.4 shows the Pin Assignments for Motor Connector (J7), and Table 3.13 lists the pin names for the connector.

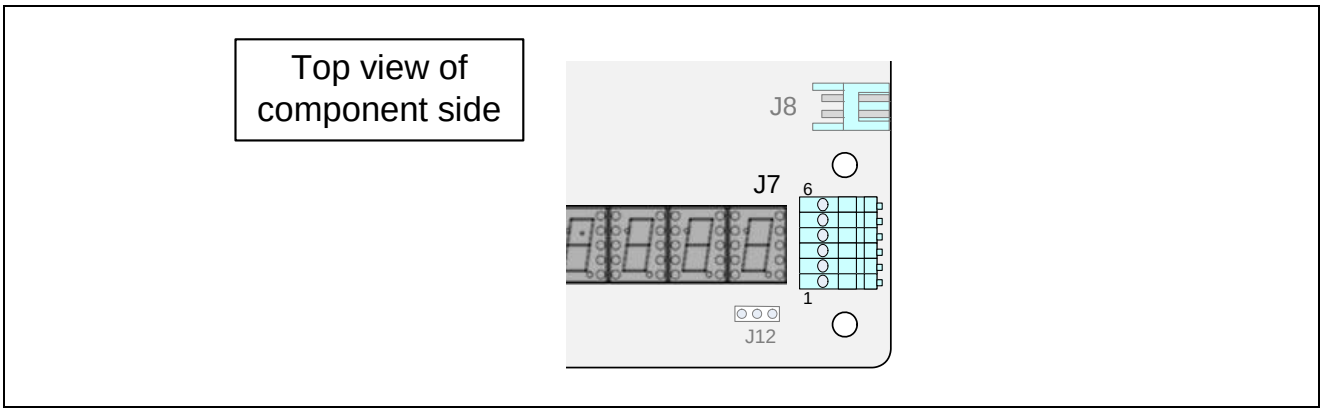

Figure 3.4 Pin Assignments for Motor Connector (J7)

Table 3.13 Pins for Motor Connector (J7)

Pin No.	Signal Name	Pin No.	Signal Name
1	A	2	B
3	+DC	4	+DC
5	$\overline{A}$	6	$\overline{B}$

3.1.4 External Power Supply Connector (J8)

The R0K50564MB001BR has an external power supply connector (J8) for motor drive. Figure 3.5 shows the Pin Assignments for External Power Supply Connector (J8), and Table 3.14 lists the pin names for the connector.

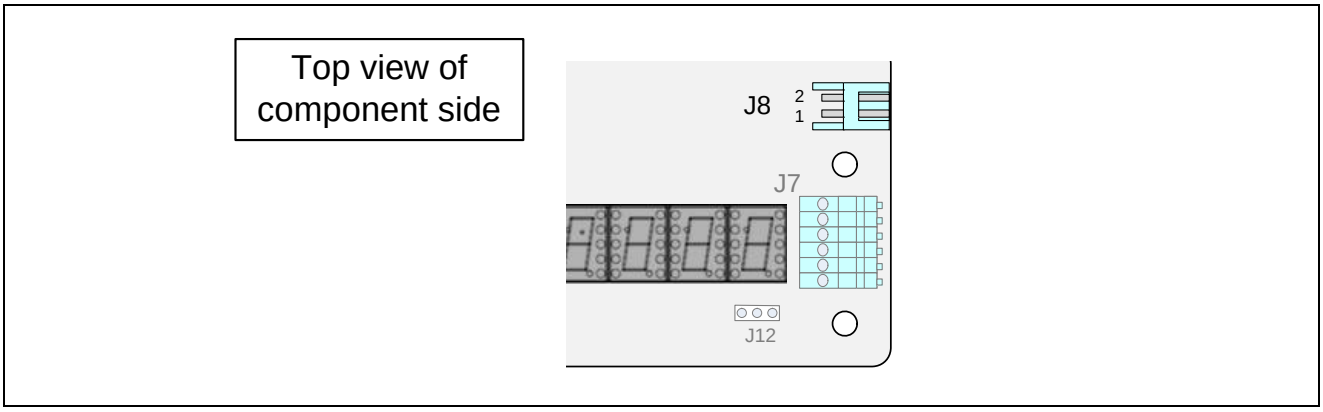

Figure 3.5 Pin Assignments for External Power Supply Connector (J8)

Table 3.14 Pins for External Power Supply Connector (J8)

Pin No.	Signal Name	Pin No.	Signal Name
1	Ext-5VCC	2	GND

3.1.5 Camera Connector (J9)

The R0K50564MB001BR has a camera connector (J9) to connect the 8-bit parallel data output camera. Figure 3.6 shows the Pin Assignments for Camera Connector (J9), and Table 3.15 lists the pin names for the connector.

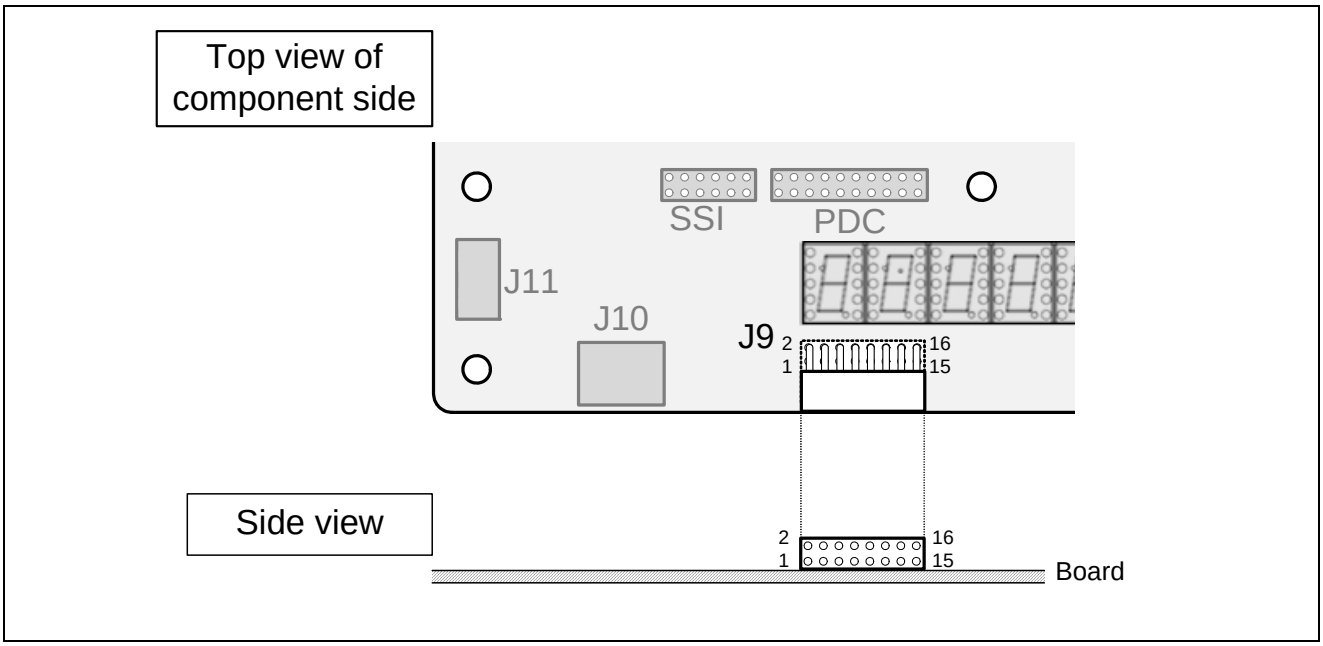

Figure 3.6 Pin Assignments for Camera Connector (J9)

Table 3.15 Pins for Camera Connector (J9)

Pin No.	Signal Name	Pin No.	Signal Name
1	VCC	2	GND
3	SIO_C	4	SIO_O
5	VSYNC	6	HREF
7	PCLK	8	XCLK
9	D7	10	D6
11	D5	12	D4
13	D3	14	D2
15	D1	16	D0

3.1.6 Sensor Connector (J10)

The R0K50564MB001BR has a sensor connector (J10) for the MEMS non-contact thermal sensor. Figure 3.7 shows the Pin Assignment for Sensor Connector (J10), and Table 3.16 lists the pin names for the connector.

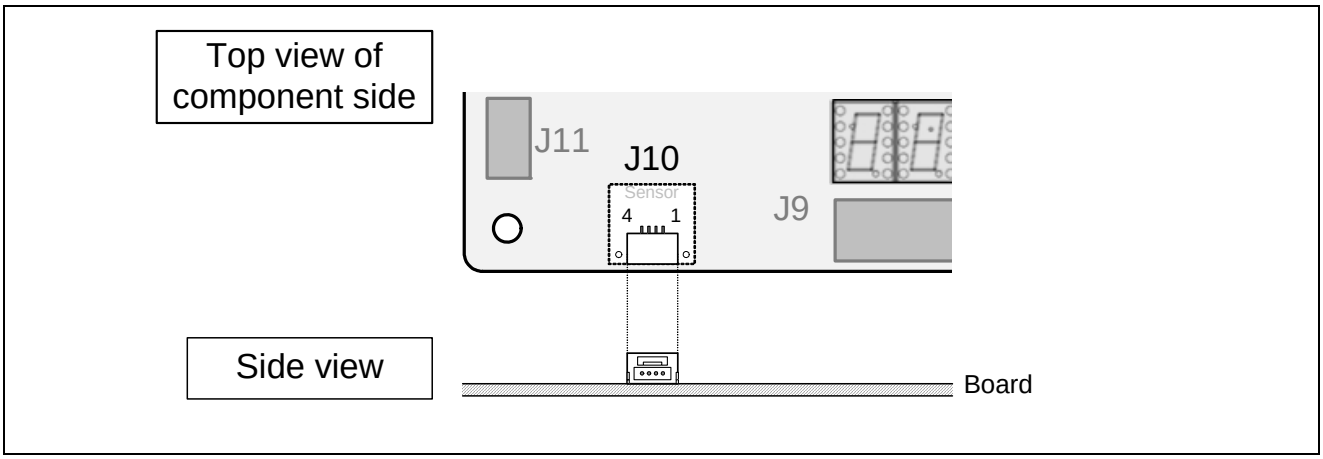

Figure 3.7 Pin Assignment for Sensor Connector (J10)

Table 3.16 Pins for Sensor Connector (J10)

Pin No.	Signal Name	Pin No.	Signal Name
1	GND	2	VCC
3	SDA	4	SCL

3.1.7 Touch Panel Connector (J11)

The R0K50564MB001BR has an FFC type 8-pin touch panel connector (J11) to connect the R8C/3JT touch panel demonstration board (TV type). Figure 3.8 shows the Pin Assignment for Touch Panel Connector (J11), and Table 3.17 lists the pin names for the connector.

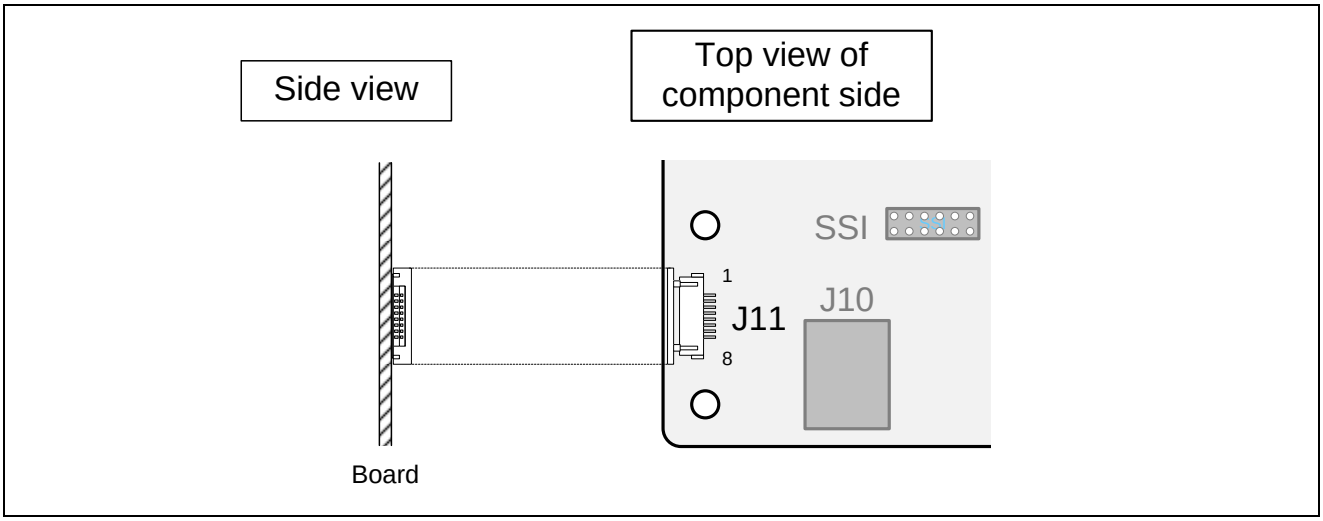

Figure 3.8 Pin Assignment for Touch Panel Connector (J11)

Table 3.17 Pins for Touch Panel Connector (J11)

Pin No.	Signal Name	Pin No.	Signal Name
1	VCC	2	RESET
3	MODE (NC)	4	TXD
5	RXD	6	DAOUT
7	NC	8	GND

3.1.8 GND Connector (J12)

The R0K50564MB001BR has a GND connector (J12). Figure 3.9 shows the Pin Assignment for GND Connector (J12), and Table 3.18 lists the pin names for the connector.

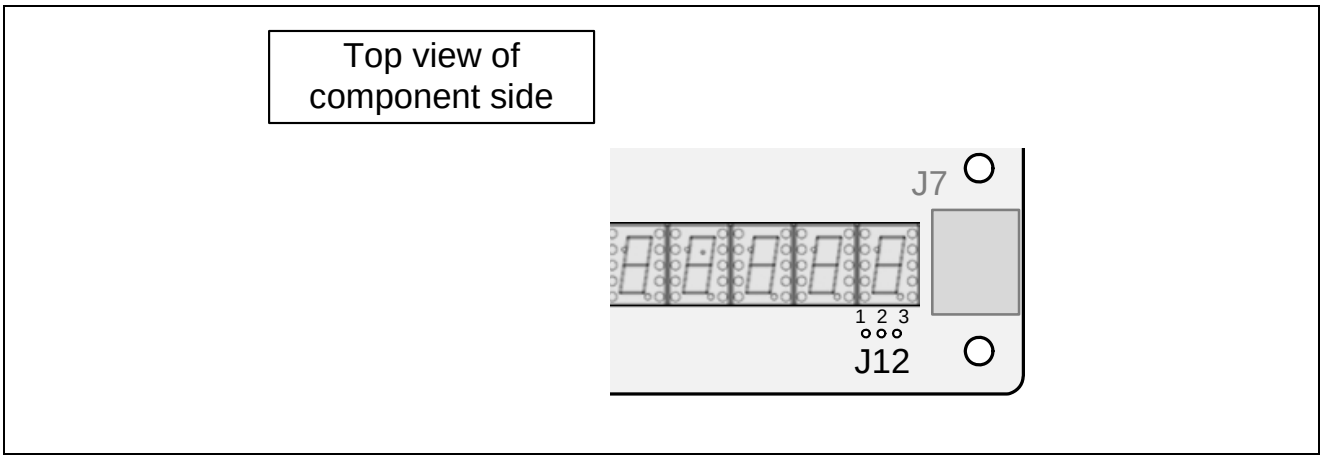

Figure 3.9 Pin Assignment for GND Connector (J12)

Table 3.18 Pins for GND Connector (J12)

Pin No.	Signal Name
1	GND
2	GND
3	GND

3.2 Operation Parts Layout

The R0K50564MB001BR has jumpers, LEDs, potentiometer, and test pins as operational parts. Figure 3.10 shows the Operation Parts Layout for R0K50564MB001BR.

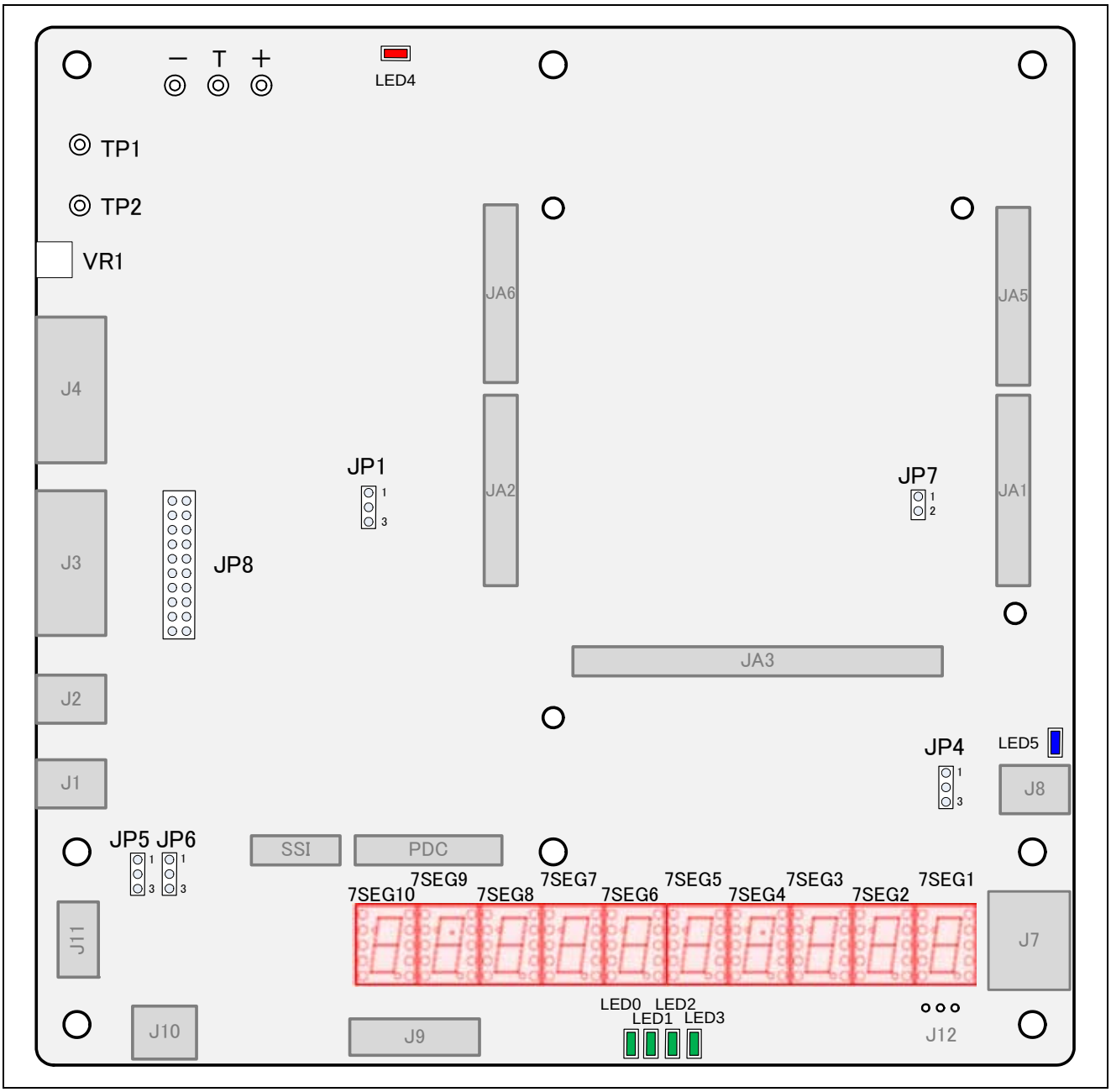

Figure 3.10 Operation Parts Layout for R0K50564MB001BR

3.2.1 Jumpers (JP1, JP4 to JP8)

Six jumpers listed in Table 3.19 are included in the R0K50564MB001BR to select functions.

Table 3.19 Jumpers for R0K50564MB001BR

No.	Jumper Name	Function
JP1	AUDIOCLK select jumper	Selects the AUDIOCLK signal of the SSI connector
JP4	Motor power supply select jumper	Selects motor drive power supply
JP5	A-RXD select jumper	Selects functions for A-RXD
JP6	A-TXD select jumper	Selects functions for A-TXD
JP7	eMMC select jumper	Controls the bus switch inserted between the eMMC and the RSK+ for RX64M CPU Board signals
JP8	Analog input select jumper	Select sound data input and RX64M ADC2/ADC3 input

3.2.1.1 AUDIOCLK Select Jumper (JP1)

JP1 selects a signal to input to the RX64M AUDIOCLK by using either the 12.288MHz oscillator output or the AK4642EN MCKO output. Pin1 and 2 should be connected when using output from the 12.288MHz oscillator, or pin 2 and 3 should be connected when using output from the MCKO signal. Table 3.20 lists the Settings for AUDIOCLK Select Jumper (JP1).

Table 3.20 Settings for AUDIOCLK Select Jumper (JP1)

No.	Setting	Function
JP1	1-2 short	Connects the 12.288MHz oscillator to the RX64M AUDIOCLK
	2-3 short	Connects the AK4642EN MCKO output to the RX64M AUDIOCLK

[Note]: Default setting.

3.2.1.2 Motor Power Supply Select Jumper (JP4)

JP4 selects whether or not the motor drive power supply should be supplied from the application header (JA1) or from the external power supply connector (J8). Pin 1 and 2 should be connected when the power is supplied from the external power supply connector (J8), and pin 2 and 3 should be connected when the power is supplied from the application header (JA1). Table 3.21 lists the Settings for Motor Power Supply Select Jumper (JP4).

Table 3.21 Settings for Motor Power Supply Select Jumper (JP4)

No.	Setting	Function
JP4	1-2 short	Supplies power from the external power supply connector (J3)
	2-3 short	Supplies power from the application header (JA1)

[Note]: Default setting.

3.2.1.3 A-RXD Select Jumper (JP5)

JP5 selects a connection destination for the A-RXD signal of the RX64M SCIg Ch7. Pin 1 and 2 should be connected when connecting the A-RXD signal to the touch panel interface, and pin 2 and 3 should be connected when connecting the SDA7 signal to the non-contact thermal sensor and the USB battery charge controller. Table 3.22 lists the Settings for A-RXD Select Jumper (JP5).

Table 3.22 Settings for A-RXD Select Jumper (JP5)

No.	Setting	Function
JP5	1-2 short	Connects the A-RXD signal to the touch panel interface
	2-3 short	Connects to the SDA7 signal to the non-contact thermal sensor and the USB battery charge controller

[Note]: Default setting.

3.2.1.4 A-TXD Select Jumper (JP6)

JP6 selects the connection destination for the A-TXD signal of the RX64M SCIg Ch7. Pin 1 and 2 should be connected when connecting the A-TXD signal to the touch panel interface, and pin 2 and 3 should be connected when connecting the SCL7 signal to the non-contact thermal sensor and the USB battery charge controller. Table 3.23 lists the Settings for A-TXD Select Jumper (JP6).

Table 3.23 Settings for A-TXD Select Jumper (JP6)

No.	Setting	Function
JP6	1-2 short	Connects the A-TXD signal to the touch panel interface
	2-3 short	Connects the SCL7 signal to the non-contact thermal sensor and the USB battery charge controller

[Note]: Default setting.

3.2.1.5 eMMC Select Jumper (JP7)

JP7 controls the signal line connection between the RX64M and the eMMC. It is connected to use the eMMC. When the eMMC is not used, it can be separated after the bus switch which has been inserted between the RX64M and the eMMC turned off by disconnecting JP7. Table 3.24 lists the Settings for eMMC Select Jumper (JP7).

Table 3.24 Settings for eMMC Select Jumper (JP7)

No.	Setting	Function
JP7	Open	Do not connect the RX64M MMCHI signal to the eMMC (eMMC disabled)
	Short	Connects the RX64M MMCHI signal to the eMMC

[Note]: Default setting.

3.2.1.6 Analog Input Select Jumper (JP8)

The R0K50564MB000BR has a jumper (JP8) for sound data input and for switching RX64M ADC2/ADC3 input. Table 3.25 lists the Setting for Analog Input Select Jumper (JP8).

Table 3.25 Setting for Analog Input Select Jumper (JP8)

No.	Setting	Function	Remarks
1-2	Short	Connects MIC_IN_L and RX64M ADC2	Exclusive control is necessary for 3-4, 9-10 and 17-18 (Concurrent short circuit disabled)
	Open	Disconnects MIC_IN_L and RX64M ADC2	
3-4	Short	Connects MIC_IN_L and AK4642EN LIN1	Exclusive control is necessary for 1-2 (Concurrent short circuit disabled)
	Open	Disconnects MIC_IN_L and AK4642EN LIN1	
5-6	Short	Connects MIC_IN_R and RX64M ADC3	Exclusive control is necessary for 7-8, 13-14 and 19-20 (Concurrent short circuit disabled)
	Open	Disconnects MIC_IN_R and RX64M ADC3	
7-8	Short	Connects MIC_IN_R and AK4642EN RIN1	Exclusive control is necessary for 5-6 (Concurrent short circuit disabled)
	Open	Disconnects MIC_IN_R and AK4642EN RIN1	
9-10	Short	Connects LINE_IN_L and RX64M ADC2	Exclusive control is necessary for 1-2, 11-12 and 17-18 (Concurrent short circuit disabled)
	Open	Disconnects LINE_IN_L and RX64M ADC2	
11-12	Short	Connects LINE_IN_L and AK4642EN LIN2	Exclusive control is necessary for 9-10 (Concurrent short circuit disabled)
	Open	Disconnects LINE_IN_L and AK4642EN LIN2	
13-14	Short	Connects LINE_IN_R and RX64M ADC3	Exclusive control is necessary for 5-6, 15-16 and SW19-20 (Concurrent short circuit disabled)
	Open	Disconnects LINE_IN_R and RX64M ADC3	
15-16	Short	Connects LINE_IN_R and AK4642EN RIN2	Exclusive control is necessary for 13-14 (Concurrent short circuit disabled)
	Open	Disconnects LINE_IN_R and AK4642EN RIN2	
17-18	Short	Connects BTT_MON and RX64M ADC2	Exclusive control is necessary for 1-2, 9-10 (Concurrent short circuit disabled)
	Open	Disconnects BTT_MON and RX64M ADC2	
19-20	Short	Connects BTT_TEMP and RX64M ADC3	Exclusive control is necessary for 5-6 and 13-14 (Concurrent short circuit disabled)
	Open	Disconnects BTT_TEMP and RX64M ADC3	

[Note]: [ ] Default setting.

3.2.2 LEDs

The R0K50564MB001BR has ten 7-segment LEDs and six single LEDs.

3.2.2.1 7-Segment LEDs

The R0K50564MB001BR has 7-sigment LEDs (7SEG1 to 7SEG10) for ten digits. These LEDs are anode common type and using the cathode side in common, they use a dynamic lighting circuit which lights on by common switching.
Refer to Figure 2.3 "Block Diagram for 7-Segment LEDs and User LEDs" for details about the signal connection.

3.2.2.2 Single LEDs

The R0K50564MB001BR has six single LEDs listed in Table 3.26.

Table 3.26 R0K50564MB001BR Mounted LEDs

No.	Color	Function/Remarks
LED0	Green	User LED (Turns on when the RX64M P91 port has "Low" level output.)
LED1	Green	User LED (Turns on when the RX64M P93 port has "Low" level output.)
LED2	Green	User LED (Turns on when the RX64M P10 port has "Low" level output.)
LED3	Green	User LED (Turns on when the RX64M P11 port has "Low" level output.)
LED4	Red	USB battery charge controller IC status monitoring LED (Turns on when STATn has "Low" level output.)
LED5	Blue	LED for external power supply (Turns on when the motor drive 5V external power is supplied.)

3.2.3 Potentiometer

The R0K50564MB001BR has one potentiometer listed in Table 3.27 for buzzer input gain control to Audio Codec LSI Refer to the datasheet provided by the manufacturer for accuracy and others. Regarding the relationship between setting resistance values and input gain, refer to the connection diagram attached to this manual and the Audio Codec LSI datasheet.

Table 3.27 R0K50564MB001BR Mounted Potentiometer

No.	Product No.	Manufacturer
VR1	N6-L50T0S 103 or N6-L50T0C 103	PIHER

3.2.4 Test Pins

The R0K50564MB001BR has five test pins listed in Table 3.28 for the USB battery charge controller.

Table 3.28 R0K50564MB001BR Mounted Test Pins

No.	Function	Remarks
TP1	Monitoring POKn signals of battery charge controller IC	
TP2	Monitoring SGn signals of battery charge controller IC	
TP3(+)	Connected to + pin of lithium-ion battery	Connects battery for charge control to the outside of the board
TP4(T)	Connected to T pin of lithium-ion battery	Connects battery for charge control to the outside of the board
TP5(-)	Connected to - pin of lithium-ion battery	Connects battery for charge control to the outside of the board

3.3 Settings for RSK+ for RX64M CPU Board

Table 3.29 lists the settings required on the RSK+ for RX64M CPU Board which is connected depending on the function used. Table 3.30 to Table 3.37 list the settings for each function when the R0K50564MB001BR is used. These settings must be followed when connecting the RSK+ for RX64M CPU Board with the R0K50564MB001BR.

Table 3.29 Settings for RSK+ for RX64M CPU Board when R0K50564MB001BR Connected

Type	Part No.	Setting	Usage
Resistor	R100, R115, R268, R269, R317, R330, R481, R518	Remove 0Ω resistor	Sound I/O
	R99, R114, R285, R286, R287, R288, R289, R476	Mount 0Ω resistor	
	R317, R330, R490, R518	Remove 0Ω resistor	Camera
	R267, R270, R271, R273, R274, R290	Mount 0Ω resistor	
	R387, R433, R464	Remove 0Ω resistor	7-seg LED
	R348, R404, R429, R445	Mount 0Ω resistor	
	R351, R409	Remove 0Ω resistor	User LED
	R40, R83, R187	Mount 0Ω resistor	
	R423, R424, R428, R441	Remove 0Ω resistor	Motor
	R51, R62, R63, R70	Mount 0Ω resistor	
	R3	Remove 0Ω resistor	USB battery,
	R15	Mount 0Ω resistor	
	R141, R165	Remove 0Ω resistor	USB battery, thermal sensor, and touch panel
Switch	SW6	SW6-1: OFF	USB battery
Jumper	J9, J20	J9: Open, J20 2-3 pin: Short	LED0, LED3
	J8, J13	2-3 pin: Short	USB battery
	J22	1-2 pin: Short	
	J1, J7, J9	Setting is changed according to the power supply or charge evaluation.	
	J15, J17	Open	PDC camera
	J16, J18	2-3 pin: Short (1-2 pin: Short for Ether)	USB battery, thermal sensor, and touch panel
Others	D2	Change to 0Ω resistor	USB battery
	RV1	Set wiper terminal voltage as about 1.5V	Touch panel
Connector	JA1, JA2	Mount 26-pin connector on solder side to connect this board	Not included by default, Connectors adjunct to the R0K50564MB001BR are used.
	JA3	Mount 50-pin connector on solder side to connect this board	
	JA5, JA6	Mount 24-pin connector on solder side to connect this board	
	PDC	Mount 20-pin connector on solder side to connect this board	
	SSI	Mount 12-pin connector on solder side to connect this board	

Table 3.30 Settings for RSK+ for RX64M CPU Board when Sound I/O Interface Used

Type	Part No.	Setting and limitation	Notes
Resistor	R100, R115, R268, R269, R317, R330, R481, R518	Remove 0Ω resistor	On the RSK+ for RX64M CPU Board, P17 is used for the serial EEPROM control signal, and P20, P21 and P22 are used for the USB control signal. Also, the SSI-related signal is multiplexed with the PCD-related signal. Therefore, it is not possible to concurrently use the sound I/O interface while the said signals are used on the RSK+ for RX64M CPU Board.
	R99, R114, R285, R286, R287, R288, R289, R476	Mount 0Ω resistor	

Table 3.31 Settings for RSK+ for RX64M CPU Board when 7-Segment LEDs Used

Type	Part No.	Setting and limitation	Notes
Resistor	R387, R433, R464	Remove 0Ω resistor	P61, P64, and P65 are used for the SDRAM control signal on the RSK+ for RX64M CPU Board. It is not possible to concurrently use the 7-seg LEDs while the said signal is used on the RSK+ for RX64M CPU Board.
	R348, R404, R429, R445	Mount 0Ω resistor	

Table 3.32 Settings for RSK+ for RX64M CPU Board when User LEDs Used

Type	Part No.	Setting and limitation	Notes
Resistor	R409	Remove 0Ω resistor (LED1, P93)	On the RSK+ for RX64M CPU Board, P10 and P11 are used for the USB control signal, and P91 and P93 are used for the Ethernet control signal. It is not possible to concurrently use the user LEDs while the said signals are used on the RSK+ for RX64M CPU Board.
	R187	Mount 0Ω resistor (LED1, P93)	
	R351	Remove 0Ω resistor (LED2, P10)	
	R83	Mount 0Ω resistor (LED2, P10)	
	R40	Mount 0Ω resistor (LED3, P11)	
Jumper	J9	Open (LED3, P11)	
	J20	2-3 pin: Short (LED0, P91)	

Table 3.33 Settings for RSK+ for RX64M CPU Board when Motor Control Interface Used

Type	Part No.	Setting and limitation	Notes
Resistor	R423, R424, R428, R441	Remove 0Ω resistor	P66, P67, PA1, and PA2 are used for the SDRAM control signal on the RSK+ for RX64M CPU Board. It is not possible to concurrently use the motor control interface while the said signal is used on the RSK+ for RX64M CPU Board.
	R51, R62, R63, R70	Mount 0Ω resistor	

Table 3.34 Settings for RSK+ for RX64M CPU Board when Camera Interface Used

Type	Part No.	Setting and limitation	Notes
Resistor	R317, R330, R490, R518	Remove 0Ω resistor	P17 is used for the serial EEPROM control signal, and P32 and P33 are used for the CAN control signal. P20, P21 and P22 are used for the USB control signal, and P00 and P01 are used for the PMOD1 control signal on the RSK+ for RX64M CPU Board. Also the PDC singles are multiplexed with the SSI signal, therefore, they aren't possible to concurrently use the camera interface while the said signals are used on the RSK+ for RX64M CPU Board. P12 and P13 are used for the EEPROM control signal on the RSK+ for RX64M CPU Board, so used by specifying an address.
	R267, R270, R271, R273, R274, R290	Mount 0Ω resistor	
Jumper	J15, J17	Open	

Table 3.35 Settings for RSK+ for RX64M CPU Board when Non-Contact Thermal Sensor Used

Type	Part No.	Setting and limitation	Notes
Resistor	R141, R165	Remove 0Ω resistor	P90 and P92 are used for the Ethernet control signal on the RSK+ for RX64M CPU Board. It is not possible to concurrently use the non-contact thermal sensor while the said signal is used on the RSK+ for RX64M CPU Board. This signal is also used for the USB battery charge controller and the touch panel interface. (Exclusive control from the touch panel interface)
Jumper	J16, J18	2-3 pin: Short	

Table 3.36 Settings for RSK+ for RX64M CPU Board when USB Battery Charge Controller Used

Type	Part No.	Setting and limitation	Notes
Resistor	R3, R141, R165	Remove 0Ω resistor	P90, P92, PC5, and PC6 are used for the Ethernet control signal on the RSK+ for RX64M CPU Board. It is not possible to concurrently use the USB battery charge controller while the said signal is used on the RSK+ for RX64M CPU Board. P90 and P92 are also used for the non-contact thermal sensor and the touch panel interface. (Exclusive control from the touch panel interface)
	R15	Mount 0Ω resistor	
Switch	SW6	SW6-1: OFF	
Jumper	J8, J13	2-3 pin: Short	
	J16, J18	2-3 pin: Short	
	J22	1-2 pin: Short	Power supply from EXT_BATT.
	J1, J7, J9	Suitable setting change	Setting is changed according to the power supply or charge evaluation.
Other	D2	Change to 0Ω resistor	It's recommended to change for 0Ω register to cancel a voltage drop at VBUS input.

Table 3.37 Settings for RSK+ for RX64M CPU Board when Touch Panel Interface Used

Type	Part No.	Setting and limitation	Notes
Resistor	R141, R165	Unmount 0Ω resistor	P90 and P92 are used for the Ethernet control signal on the RSK+ for RX64M CPU Board. It is not possible to concurrently use the touch panel interface while the said single is used on the RSK+ for RX64M CPU Board. This signal is also used for the non-contact thermal sensor and the USB battery charge controller. These functions are disabled while the said signal is used.
Jumper	J16, J18	2-3 pin: Short	
Others	RV1	Set wiper terminal voltage as about 1.5V	

Table 3.38 lists the limitations for the RSK+ for RX64M CPU Board, which must be followed when connecting to the R0K50564MB001BR.

Table 3.38 Limitations for RSK+ for RX64M CPU Board when R0K50564MB001BR Connected

Type	Part No.	Limitation	Remarks
Memory	U13	SDRAM disabled	When 7-seg LEDs and the motor are used (because the same signal line is used)
Connector	RCAN	CAN connector disabled	When PDC is used (because the same signal line is used)
	ETHERNET0, ETHERNET1	Ethernet connector disabled	When user LEDs, USB battery charge controller, non-contact thermal sensor, and touch panel are used (because the same signal line is used)
	USBH1, USBH2, USBH3	USBH connector disabled	When user LED2 and LED3, sound I/O, and the camera are used (because the same signal line is used)
	PMOD1	PMOD1 connector disabled	When PDC is used (because the same signal line is used)
Potentiometer	VR1	Potentiometer disabled	When the touch panel is used (because the same signal line is used)

3.4 Dimensions

Figure 3.11 shows the R0K50564MB001BR Demensions.

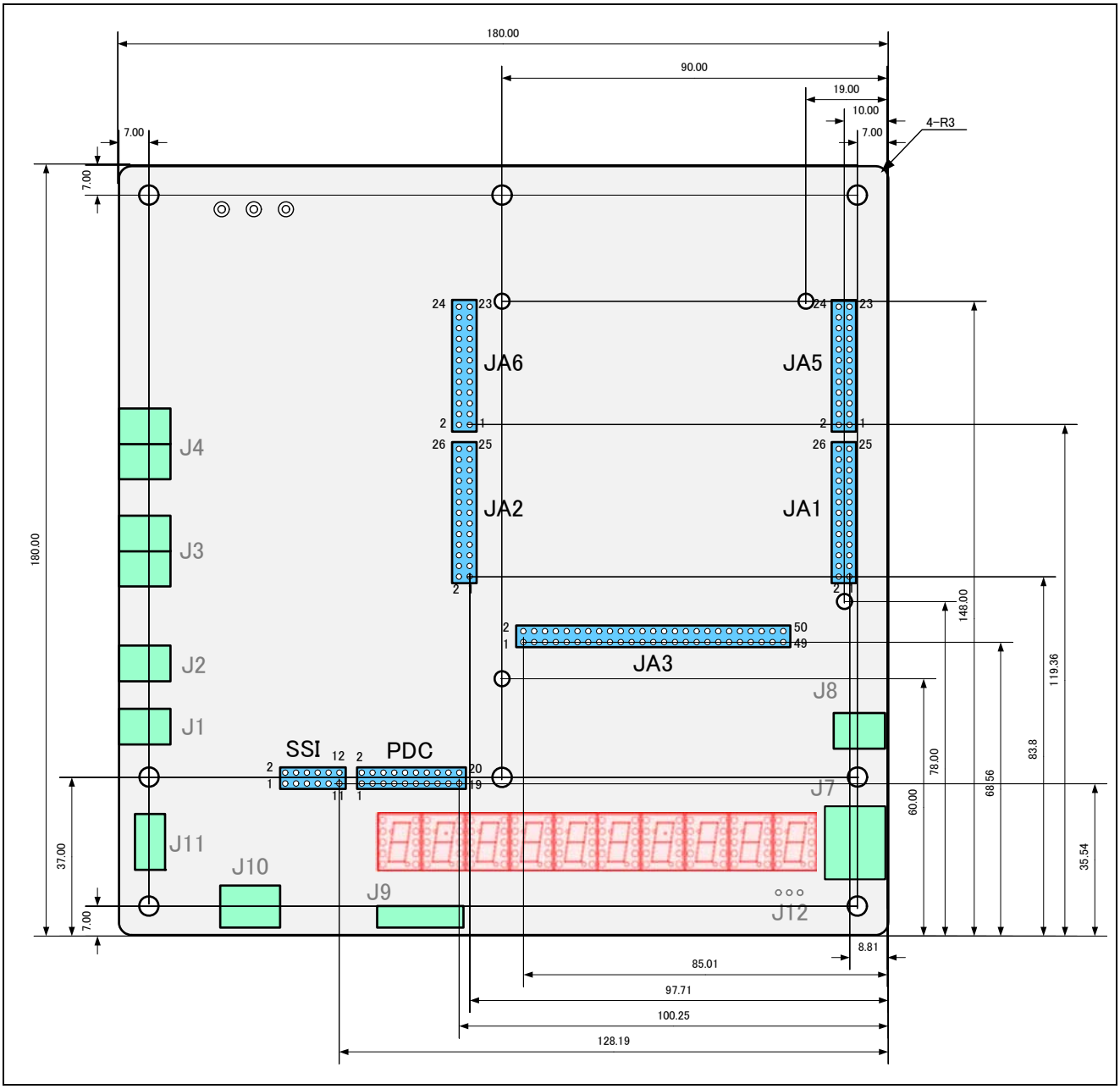

Figure 3.11 R0K50564MB001BR Demensions

Appendix R0K50564MB001BR Schematics

HMI expansion board R0K50564MB001BR SCHEMATICS

TITLE	PAGE
INDEX	1
Audio Interface and eMMC	2
7Seg-LED, user LED and Motor Control	3
Camera, Sensor Interface and others	4
Host Interface Connectors	5

Note:

Digital GND (VSS)

Analog GND (AVss)

Not mounted

5VCC = Digital 5V
3VCC = Digital 3.3V
2_7VCC = Digital 2.75V
AVDD = Analog 3.3V for Audio Interface

R = Fixed Resistors
C = Ceramic Caps
CE = Tantalum Electrolytic Caps
CP = Decoupling Caps
L = Inductor

CHANGE			Renesas Solutions Corp.				R0K50564MB001BR
			DRAWN	CHECKED	DESIGNED	APPROVED	INDEX (1 / 5)
	SCALE						
	DATE	14-08-07					D-R0K50564MB001BR_C

Audio Interface

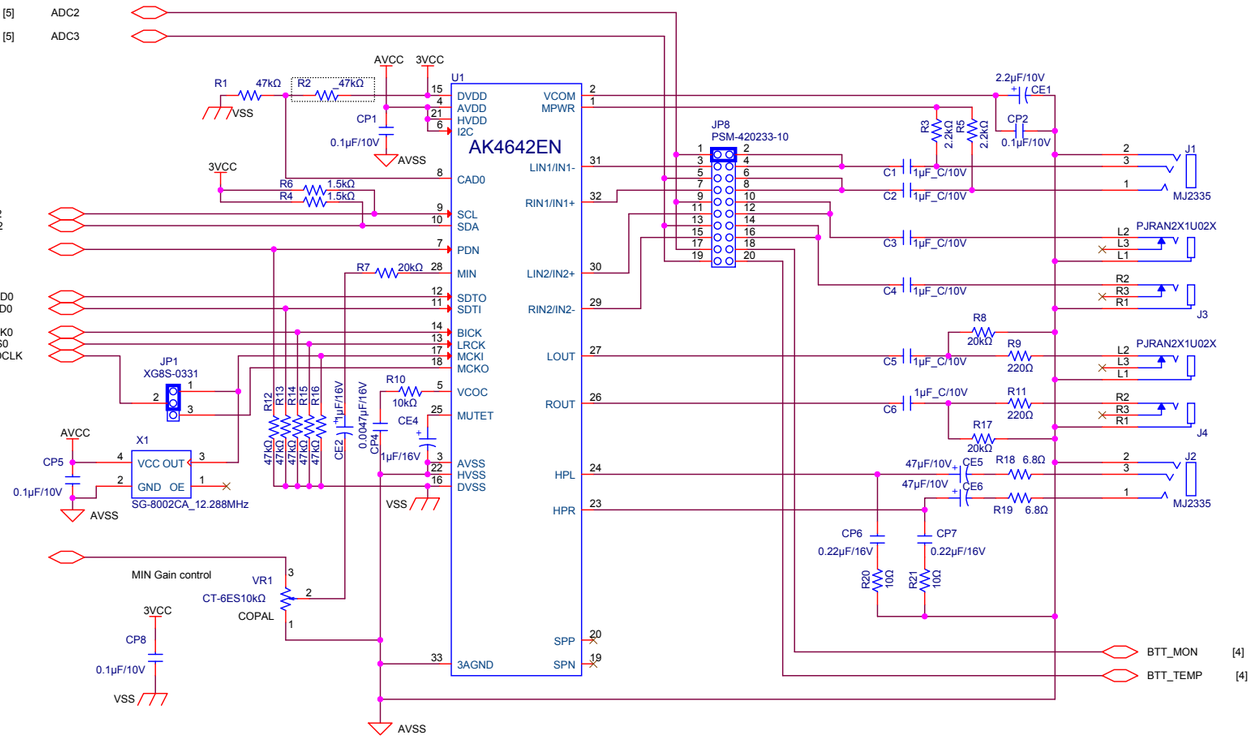

Digital-Analog Voltage Conversion

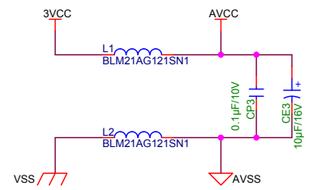

This circuit must be arranging near the power supply source.

eMMC

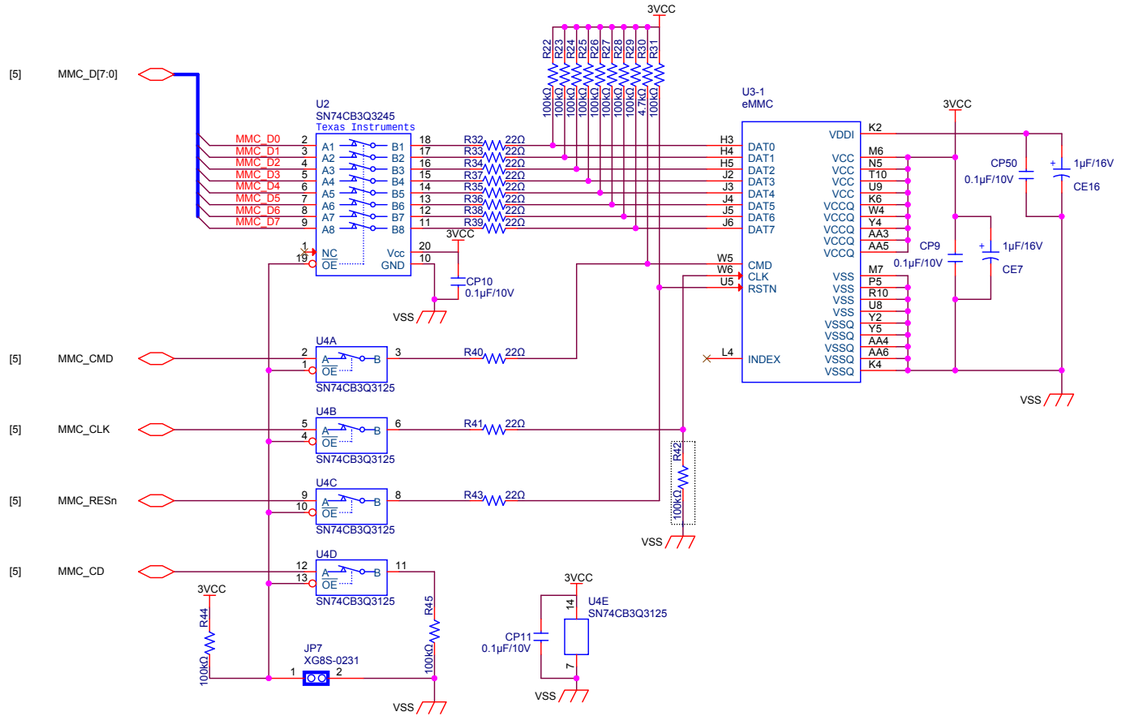

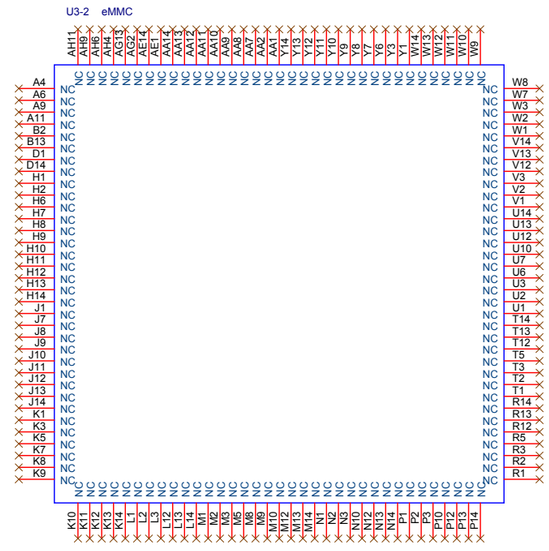

CHANGE			Renesas Solutions Corp.		
			DRAWN	CHECKED	DESIGNED	APPROVED
	SCALE					
	DATE	14-08-07				

R0K50564MB001BR
Audio Interface and eMMC
(2 / 5)
D-R0K50564MB001BR_C

Motor-Connecting Interface

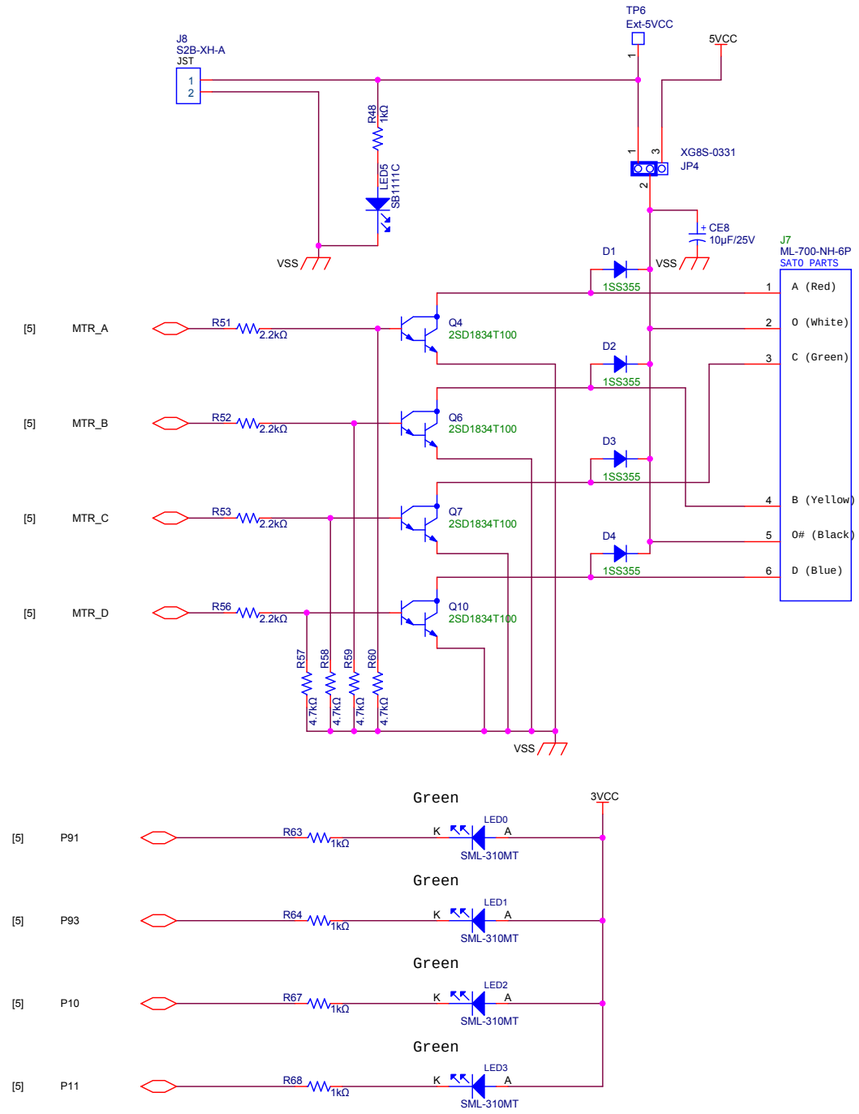

7-segment LED (1-disit x 10)

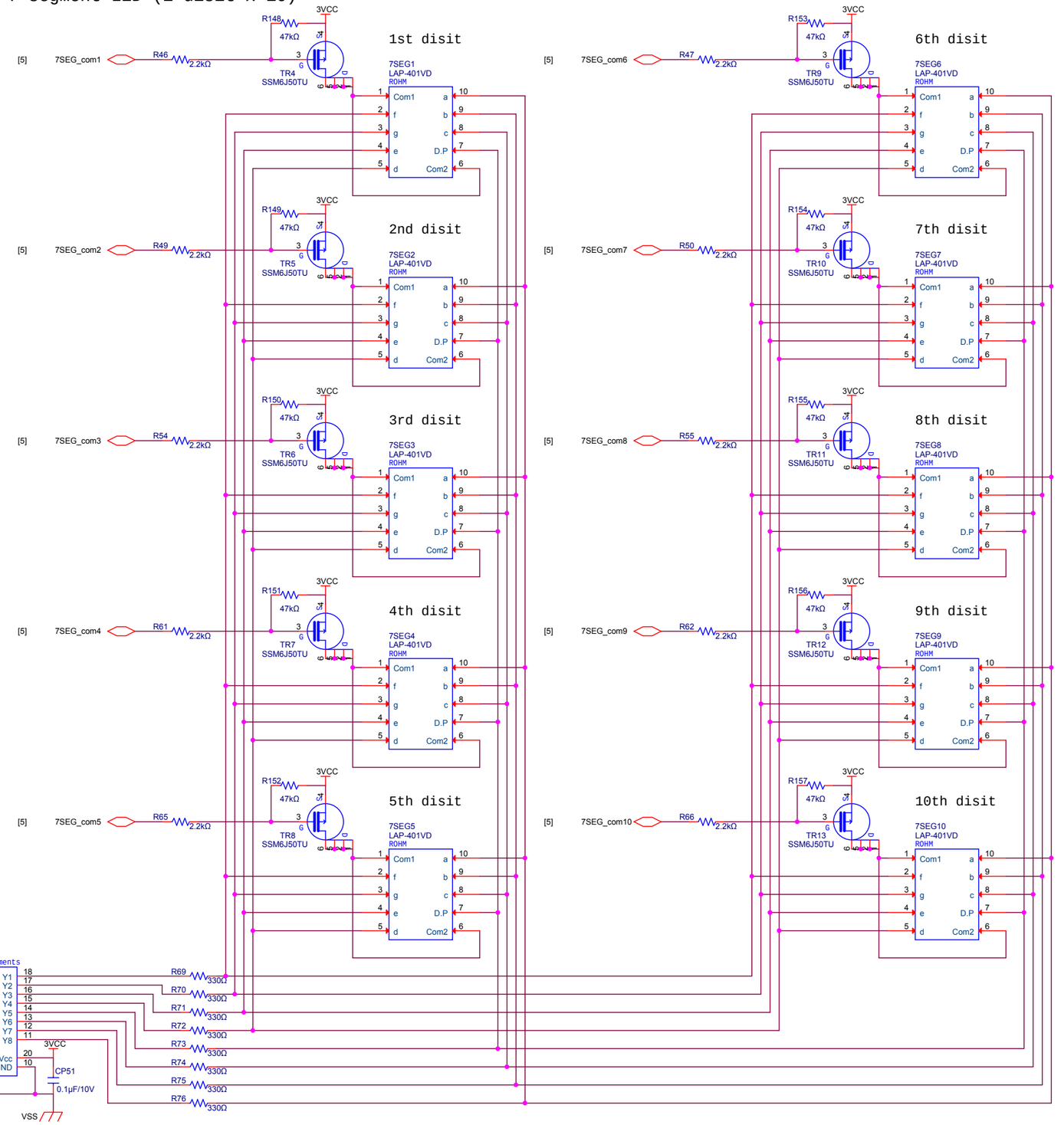

CHANGE			Renesas Solutions Corp.		
			DRAWN	CHECKED	DESIGNED	APPROVED
	SCALE					
	DATE	14-08-07				

R0K50564MB001BR
7Seg LED, Usr LED and Motor I/F
(3 / 5)
D-R0K50564MB001BR_C

Camera Interface

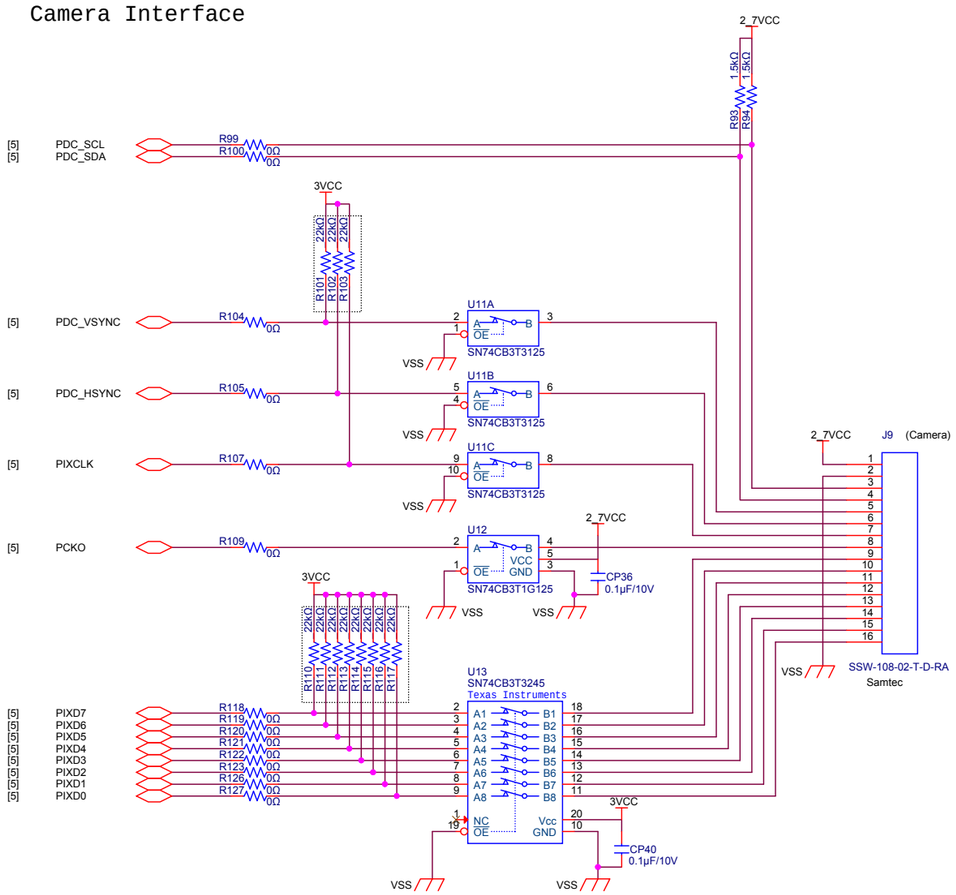

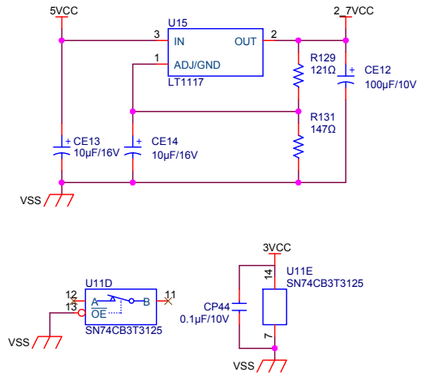

Sensor Interface

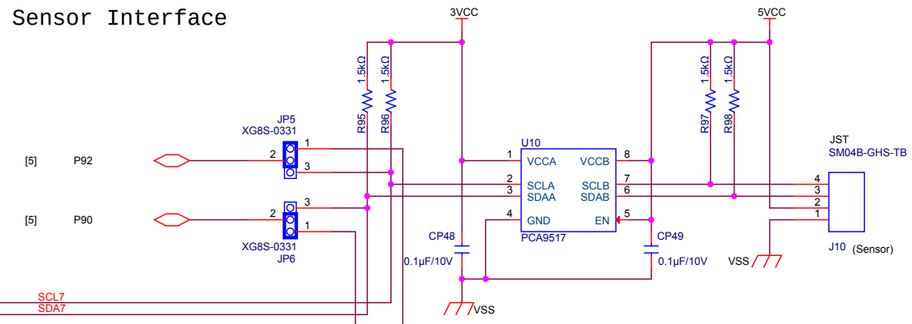

Touch Panel Interface

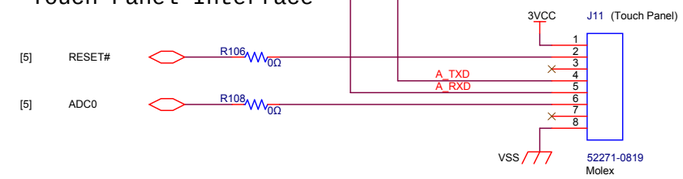

USB Battery Charge Control

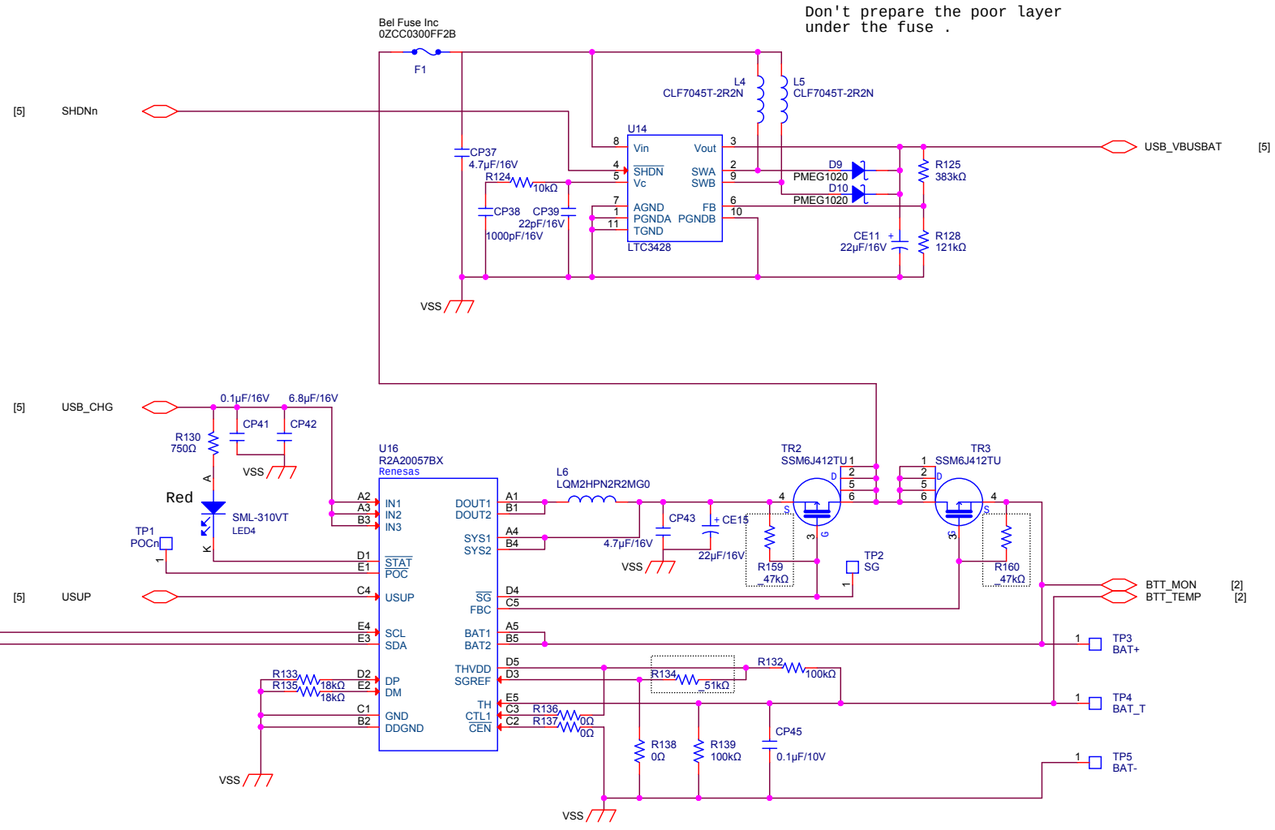

CHANGE			Renesas Solutions Corp.		
			DRAWN	CHECKED	DESIGNED	APPROVED
	SCALE					
	DATE	14-08-07				

R0K50564MB001BR
Camera, Sensor, Touch Panel and USB Battery Control (4 / 5)
D-R0K50564MB001BR_C

Application Header
(Host Interface Connectors)

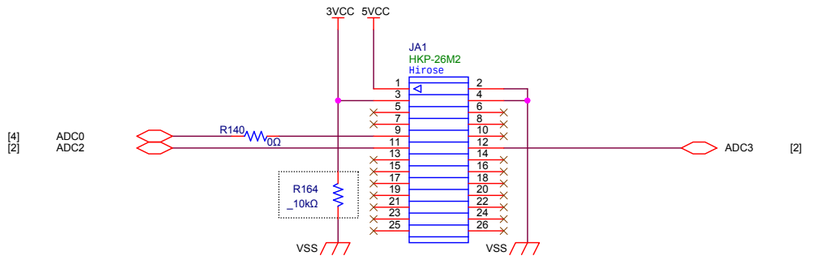

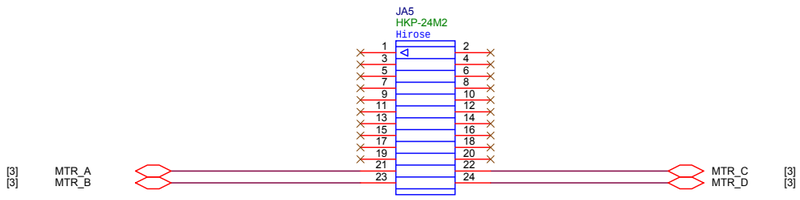

PDC Connector

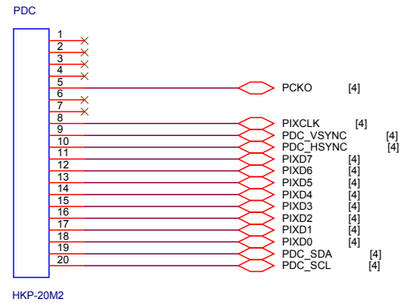

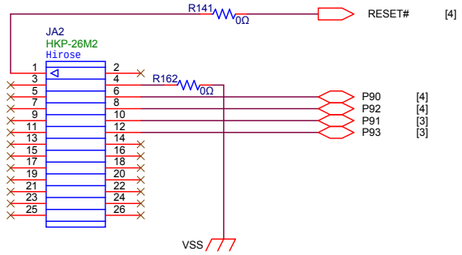

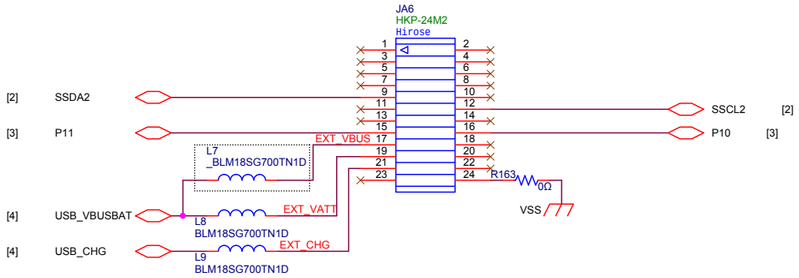

SSI Connector

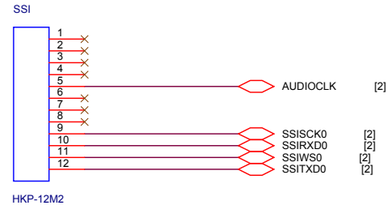

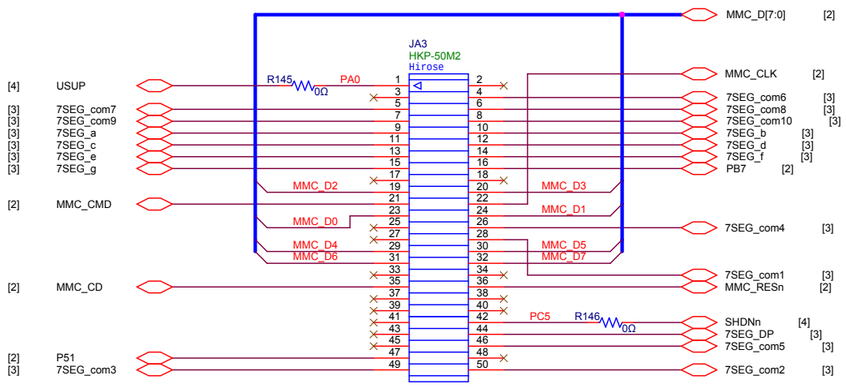

GND Connector

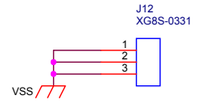

CHANGE			Renesas Solutions Corp.			R0K50564MB001BR
			DRAWN	CHECKED	DESIGNED	APPROVED
		SCALE				Host Interface Connectors (5 / 5)
		DATE	14-08-07			D-R0K50564MB001BR_C

REVISION HISTORY	HMI Expansion Board R0K50564MB001BR User's Manual

Rev.	Date	Description	
		Page	Summary
1.00	Dec. 10, 2014	-	First edition
1.01	Jan. 16, 2015	Whole	Unified the designation of RSK board to "RSK + for RX64M CPU board"

HMI Expansion Board R0K50564MB001BR User's Manual

Publication Date: Jan. 16, 2015 Rev.1.01
Published by: Renesas Electronics Corporation

SALES OFFICES Renesas Electronics Corporation http://www.renesas.com

Refer to "http://www.renesas.com/" for the latest and detailed information.

Renesas Electronics America Inc.
2801 Scott Boulevard Santa Clara, CA 95050-2549, U.S.A.
Tel: +1-408-588-6000, Fax: +1-408-588-6130

Renesas Electronics Canada Limited
1101 Nicholson Road, Newmarket, Ontario L3Y 9C3, Canada
Tel: +1-905-898-5441, Fax: +1-905-898-3220

Renesas Electronics Europe Limited
Dukes Meadow, Millboard Road, Bourne End, Buckinghamshire, SL8 5FH, U.K
Tel: +44-1628-585-100, Fax: +44-1628-585-900

Renesas Electronics Europe GmbH
Arcadiastrasse 10, 40472 Düsseldorf, Germany
Tel: +49-211-6503-0, Fax: +49-211-6503-1327

Renesas Electronics (China) Co., Ltd.
Room 1709, Quantum Plaza, No.27 ZhiChunLu Haidian District, Beijing 100191, P.R.China
Tel: +86-10-8235-1155, Fax: +86-10-8235-7679

Renesas Electronics (Shanghai) Co., Ltd.
Unit 301, Tower A, Central Towers, 555 Langao Road, Putuo District, Shanghai, P. R. China 200333
Tel: +86-21-2226-0888, Fax: +86-21-2226-0999

Renesas Electronics Hong Kong Limited
Unit 1601-1613, 16/F., Tower 2, Grand Century Place, 193 Prince Edward Road West, Mongkok, Kowloon, Hong Kong
Tel: +852-2265-6688, Fax: +852 2886-9022/9044

Renesas Electronics Taiwan Co., Ltd.
13F, No. 363, Fu Shing North Road, Taipei 10543, Taiwan
Tel: +886-2-8175-9600, Fax: +886 2-8175-9670

Renesas Electronics Singapore Pte. Ltd.
80 Bendemeer Road, Unit #06-02 Hyflux Innovation Centre, Singapore 339949
Tel: +65-6213-0200, Fax: +65-6213-0300

Renesas Electronics Malaysia Sdn.Bhd.
Unit 906, Block B, Menara Amcorp, Amcorp Trade Centre, No. 18, Jln Persiaran Barat, 46050 Petaling Jaya, Selangor Darul Ehsan, Malaysia
Tel: +60-3-7955-9390, Fax: +60-3-7955-9510

Renesas Electronics Korea Co., Ltd.
12F., 234 Teheran-ro, Gangnam-Ku, Seoul, 135-920, Korea
Tel: +82-2-558-3737, Fax: +82-2-558-5141

© 2014 Renesas Electronics Corporation. All rights reserved.
Colophon 3.0

HMI Expansion Board
R0K50564MB001BR
User's Manual

Renesas Electronics Corporation

R20UT3056EJ0101