User's Manual

32

RH850/P1x Group

User's Manual: Hardware

Renesas microcontroller
RH850 Family

All information contained in these materials, including products and product specifications, represents information on the product at the time of publication and is subject to change by Renesas Electronics Corp. without notice. Please review the latest information published by Renesas Electronics Corp. through various means, including the Renesas Electronics Corp. website (http://www.renesas.com).

Renesas Electronics
www.renesas.com

Rev.1.40 Mar, 2018

Notice

1. Descriptions of circuits, software and other related information in this document are provided only to illustrate the operation of semiconductor products and application examples. You are fully responsible for the incorporation or any other use of the circuits, software, and information in the design of your product or system. Renesas Electronics disclaims any and all liability for any losses and damages incurred by you or third parties arising from the use of these circuits, software, or information.
2. Renesas Electronics hereby expressly disclaims any warranties against and liability for infringement or any other claims involving patents, copyrights, or other intellectual property rights of third parties, by or arising from the use of Renesas Electronics products or technical information described in this document, including but not limited to, the product data, drawings, charts, programs, algorithms, and application examples.
3. No license, express, implied or otherwise, is granted hereby under any patents, copyrights or other intellectual property rights of Renesas Electronics or others.
4. You shall not alter, modify, copy, or reverse engineer any Renesas Electronics product, whether in whole or in part. Renesas Electronics disclaims any and all liability for any losses or damages incurred by you or third parties arising from such alteration, modification, copying or reverse engineering.
5. Renesas Electronics products are classified according to the following two quality grades: "Standard" and "High Quality". The intended applications for each Renesas Electronics product depends on the product's quality grade, as indicated below.
   "Standard": Computers; office equipment; communications equipment; test and measurement equipment; audio and visual equipment; home electronic appliances; machine tools; personal electronic equipment; industrial robots; etc.
   "High Quality": Transportation equipment (automobiles, trains, ships, etc.); traffic control (traffic lights); large-scale communication equipment; key financial terminal systems; safety control equipment; etc.
   Unless expressly designated as a high reliability product or a product for harsh environments in a Renesas Electronics data sheet or other Renesas Electronics document, Renesas Electronics products are not intended or authorized for use in products or systems that may pose a direct threat to human life or bodily injury (artificial life support devices or systems; surgical implantations; etc.), or may cause serious property damage (space system; undersea repeaters; nuclear power control systems; aircraft control systems; key plant systems; military equipment; etc.). Renesas Electronics disclaims any and all liability for any damages or losses incurred by you or any third parties arising from the use of any Renesas Electronics product that is inconsistent with any Renesas Electronics data sheet, user's manual or other Renesas Electronics document.
6. When using Renesas Electronics products, refer to the latest product information (data sheets, user's manuals, application notes, "General Notes for Handling and Using Semiconductor Devices" in the reliability handbook, etc.), and ensure that usage conditions are within the ranges specified by Renesas Electronics with respect to maximum ratings, operating power supply voltage range, heat dissipation characteristics, installation, etc. Renesas Electronics disclaims any and all liability for any malfunctions, failure or accident arising out of the use of Renesas Electronics products outside of such specified ranges.
7. Although Renesas Electronics endeavors to improve the quality and reliability of Renesas Electronics products, semiconductor products have specific characteristics, such as the occurrence of failure at a certain rate and malfunctions under certain use conditions. Unless designated as a high reliability product or a product for harsh environments in a Renesas Electronics data sheet or other Renesas Electronics document, Renesas Electronics products are not subject to radiation resistance design. You are responsible for implementing safety measures to guard against the possibility of bodily injury, injury or damage caused by fire, and/or danger to the public in the event of a failure or malfunction of Renesas Electronics products, such as safety design for hardware and software, including but not limited to redundancy, fire control and malfunction prevention, appropriate treatment for aging degradation or any other appropriate measures. Because the evaluation of microcomputer software alone is very difficult and impractical, you are responsible for evaluating the safety of the final products or systems manufactured by you.
8. Please contact a Renesas Electronics sales office for details as to environmental matters such as the environmental compatibility of each Renesas Electronics product. You are responsible for carefully and sufficiently investigating applicable laws and regulations that regulate the inclusion or use of controlled substances, including without limitation, the EU RoHS Directive, and using Renesas Electronics products in compliance with all these applicable laws and regulations. Renesas Electronics disclaims any and all liability for damages or losses occurring as a result of your noncompliance with applicable laws and regulations.
9. Renesas Electronics products and technologies shall not be used for or incorporated into any products or systems whose manufacture, use, or sale is prohibited under any applicable domestic or foreign laws or regulations. You shall comply with any applicable export control laws and regulations promulgated and administered by the governments of any countries asserting jurisdiction over the parties or transactions.
10. It is the responsibility of the buyer or distributor of Renesas Electronics products, or any other party who distributes, disposes of, or otherwise sells or transfers the product to a third party, to notify such third party in advance of the contents and conditions set forth in this document.
11. This document shall not be reprinted, reproduced or duplicated in any form, in whole or in part, without prior written consent of Renesas Electronics.
12. Please contact a Renesas Electronics sales office if you have any questions regarding the information contained in this document or Renesas Electronics products.

(Note 1) "Renesas Electronics" as used in this document means Renesas Electronics Corporation and also includes its directly or indirectly controlled subsidiaries.

(Note 2) "Renesas Electronics product(s)" means any product developed or manufactured by or for Renesas Electronics.

(Rev.4.0-1 November 2017)

Notes for CMOS devices

(1) Voltage application waveform at input pin: Waveform distortion due to input noise or a reflected wave may cause malfunction. If the input of the CMOS device stays in the area between VIL (MAX) and VIH (MIN) due to noise, etc., the device may malfunction. Take care to prevent chattering noise from entering the device when the input level is fixed, and also in the transition period when the input level passes through the area between VIL (MAX) and VIH (MIN).

(2) Handling of unused input pins: Unconnected CMOS device inputs can be cause of malfunction. If an input pin is unconnected, it is possible that an internal input level may be generated due to noise, etc., causing malfunction. CMOS devices behave differently than Bipolar or NMOS devices. Input levels of CMOS devices must be fixed high or low by using pull-up or pull-down circuitry. Each unused pin should be connected to power supply or GND via a resistor if there is a possibility that it will be an output pin. All handling related to unused pins must be judged separately for each device and according to related specifications governing the device.

(3) Precaution against ESD: A strong electric field, when exposed to a MOS device, can cause destruction of the gate oxide and ultimately degrade the device operation. Steps must be taken to stop generation of static electricity as much as possible, and quickly dissipate it when it has occurred. Environmental control must be adequate. When it is dry, a humidifier should be used. It is recommended to avoid using insulators that easily build up static electricity. Semiconductor devices must be stored and transported in an anti-static container, static shielding bag or conductive material. All test and measurement tools including work benches and floors should be grounded. The operator should be grounded using a wrist strap. Semiconductor devices must not be touched with bare hands. Similar precautions need to be taken for PW boards with mounted semiconductor devices.

(4) Status before initialization: Power-on does not necessarily define the initial status of a MOS device. Immediately after the power source is turned ON, devices with reset functions have not yet been initialized. Hence, power-on does not guarantee output pin levels, I/O settings or contents of registers. A device is not initialized until the reset signal is received. A reset operation must be executed immediately after power-on for devices with reset functions.

(5) Power ON/OFF sequence: In the case of a device that uses different power supplies for the internal operation and external interface, as a rule, switch on the external power supply after switching on the internal power supply. When switching the power supply off, as a rule, switch off the external power supply and then the internal power supply. Use of the reverse power on/off sequences may result in the application of an overvoltage to the internal elements of the device, causing malfunction and degradation of internal elements due to the passage of an abnormal current. The correct power on/off sequence must be judged separately for each device and according to related specifications governing the device.

(6) Input of signal during power off state: Do not input signals or an I/O pull-up power supply while the device is not powered. The current injection that results from input of such a signal or I/O pull-up power supply may cause malfunction and the abnormal current that passes in the device at this time may cause degradation of internal elements. Input of signals during the power off state must be judged separately for each device and according to related specifications governing the device.

How to Use This Manual

Readers

This manual is intended for users who wish to understand the functions of the RH850/P1x and design application systems using the following RH850/P1x microcontrollers:

Purpose

This manual is intended to give users an understanding of the hardware functions of the RH850/P1x shown in the *Organization* below.

Organization

This manual is divided into two parts: Hardware (this manual) and Architecture (RH850G3M User's Manual: Software).

Hardware	Software
Pin functions	Overview
CPU function	Processor Model
On-chip peripheral functions	Register Reference
Flash memory programming	Exceptions and Interrupts
	Memory Management
	Instruction Reference
	Reset
	Appendix

How to read this manual

It is assumed that the readers of this manual have general knowledge in the fields of electrical engineering, logic circuits, and microcontrollers.

To understand the overall functions of the RH850/P1x.

→ Read this manual according to the Contents.

To understand the details of an instruction function

→ See RH850G3M User's Manual: Software (R01US0123E) available separately.

Conventions

Data significance: Higher digits on the left and lower digits on the right

Active low representation: xxx (overscore over pin or signal name)

Memory map address: Higher addresses on the top and lower addresses on the bottom

Note: Footnote for item marked with Note in the text

Caution: Information requiring particular attention

Remark: Supplementary information

Numeric representation: Binary ... xxxx or $xxxx_B$

Decimal ... xxxx

Hexadecimal ... $xxxx_H$

Prefix indicating power of 2 (address space, memory capacity):

K (kilo): $2^{10} = 1{,}024$

M (mega): $2^{20} = 1{,}024^2$

G (giga): $2^{30} = 1{,}024^3$

Description of Registers

Each register description includes register access, register address, and register value after a reset, a bit chart, illustrating the arrangement of bits, and a table of bits, describing the meaning of the bit settings.

The standard format for bit charts and tables are described below.

(1) **Access:** This register can be read/written in 32-bit units.

(2) **Address:** <CSIGn_base> + 1010_H

(3) **Value after reset:** $0000\ 0000_H$

Bit	31	30	29	28	27	26	25	24	23	22	21	20	19	18	17	16
	—	—	CSIGnPS[1:0]		CSIGnDLS[3:0]				—	—	—	—	—	CSIGn DIR	—	CSIGn DAP
Value after reset	0	0	0	0	0	0	0	0	0	0	0	0	0	0	0	0
R/W	R	R	R/W	R/W	R/W	R/W	R/W	R/W	R	R	R	R	R	R/W	R	R/W

Bit	15	14	13	12	11	10	9	8	7	6	5	4	3	2	1	0
	—	—	—	—	—	—	—	—	—	—	—	—	—	—	—	—
Value after reset	0	0	0	0	0	0	0	0	0	0	0	0	0	0	0	0
R/W	R	R	R	R	R	R	R	R	R	R	R	R	R	R	R	R

(4) (5) (6) (7) (8)

Table 14.19 CSIGnCFG0 register contents (1/2)

Bit Position	Bit Name	Function
31, 30	Reserved	The write value should always be the value after reset.
29, 28	CSIGnPS[1:0]	Specifies parity.
27 to 24	CSIGnDLS [3:0]	Specifies data length. 0: Data length is 16 bits 1: Data length is 1 bit 2: Data length is 2 bits ... 15: Data length is 15 bits **CAUTION** For a data length of less than 7 bits, do not set bits CSIGnCFG0.CSIGnDLS[3:0] for a value 1 to 6 when the extended data length function is disabled with bit CSIGnCTL1.CSIGnEDLE set to 0. It is forbidden to transmit two consecutive data with a data length of less than 7 bits.
23 to 19	Reserved	The write value should always be the value after reset.

CSIGn PS1	CSIGn PS0	Transmission	Reception
0	0	No parity transmitted	No parity is waited for.
0	1	Add parity bit fixed at 0	Parity bit is waited for but not judged.
1	0	Add odd parity	Odd parity bit is waited for.
1	1	Add even parity	Even parity bit is waited for.

(1) Access

The register can be accessed in the bit unit indicated here.

(2) Address

This is the register address.
For base address, see description of base address in each section.

(3) Value after a reset (in hexadecimal notation)

This is the value of all bits of the register after a reset. Values for bytes are given as numbers in the range from 0 to 9 and letters from A to F or as X where they are undefined.

(4) Bit position

This is the bit number.
The bits are numbered from 31 to 0 for 32-bit registers, 15 to 0 for 16-bit registers, and 7 to 0 for 8-bit registers.

(5) Bit name

Bit name or field name is indicated.
When clearly identifying the digits of a bit field is required, do so by using a form such as CSIGnDLS[3:0] above.
Indicate reserved bits by using a dash (—).

(6) Value after a reset (in binary notation)

This is the bit values after a reset.

0 : The value after a reset is 0.

1 : The value after a reset is 1.

— : The value after a reset is undefined.

(7) R/W

This is the bit attribute of all bits of the register.

R/W : The bit or field is readable and writable.

R : The bit or field is readable.
Note that all reserved bits are indicated as R.
When written, the value specified in the bit chart or the value after a reset should be written.

W : This bit or field is writable.When read, the value is undefined. If a value is indicated in the bit chart, the value is returned.

(8) Function

This is function of the bit.

All trademarks and registered trademarks are the property of their respective owners.

Table of Contents

Section 1 Overview 59

1.1 Outline 59

1.2 Application Fields 60

1.3 Specification Overview 60

1.4 Functional Block Configuration 62

1.4.1 Internal Block Diagram 62

Section 2 Pins 63

2.1 Pin Connection Diagram 63

2.2 Pin Expansion 70

2.2.1 Overview 70

2.2.2 List of Pin Functions 70

2.3 Port Functions 85

2.3.1 Features 85

2.3.2 Overview 86

2.3.2.1 Terms 86

2.3.2.2 Overview of Pin Functions 87

2.3.2.3 Pin Data Input/Output 89

2.3.3 Port Type 91

2.3.4 Port Group Configuration Register 93

2.3.4.1 Outline 93

2.3.4.2 Pin Function Configuration 95

2.3.4.3 Pin Data Input/Output 105

2.3.4.4 Configuration of Electrical Characteristics 111

2.3.4.5 Pin-unit Register 120

2.3.4.6 Example of Port Configuration Flowchart 122

2.3.5 Functional Selection 127

2.3.5.1 Register Configuration in Use of the Alternative Function 127

2.3.5.2 Alternative Function to be used in Direct I/O Control Alternative Mode 127

2.3.5.3 Register Setting in Use of an Analog Input Pin 128

2.3.5.4 Input Buffer Control (PISA) 128

2.3.5.5 Output Buffer Control (PDSC, PUCC) 130

2.4 Organization of Port Groups 133

2.4.1 Port Function 133

2.4.1.1 List of Port Registers 133

2.4.1.2 List of Alternative Function Pins 146

2.4.1.3 Port 0 (P0) 147

2.4.1.4 Port 1 (P1) 148

2.4.1.5 Port 2 (P2) 149

2.4.1.6 Port 3 (P3) 150

2.4.1.7 Port 4 (P4) 151

2.4.1.8 Port 5 (P5) 152

2.4.1.9 Port JP0 (JP0) 153

2.4.2 Handling of Unused Pins 154

2.5 DNF 161

2.5.1 Example of Noise Elimination 161

2.6 Noise Filter and Edge Level Detection Circuit 162
2.6.1 Allocation of Port Filters 162
2.6.2 Filter Type 169
2.6.2.1 Digital Filter Type A (INTP/RXD Alternative) Input Pin 169
2.6.2.2 Digital Filter Type B (INTP/ESO Alternative) Input Pin 170
2.6.2.3 Digital Filter Type C (for INTP9 and NMI) Input Pin 171
2.6.2.4 Digital Filter Type D (for SENT, PSI5) Input Pin 172
2.6.2.5 Digital Filter Type E (No Edge Detection) Input Pin 173
2.6.2.6 Digital Filter Type F (No Edge Detection) Input Pin 173
2.6.2.7 Analog Filter ANF Input Pin 174
2.6.3 Registers 175
2.6.3.1 List of Registers 175
2.6.3.2 FCLAnCTLm — Filter Control Register 176
2.6.3.3 DNFAnCTL — Digital Noise Elimination Control Register 177
2.6.3.4 DNFAnEN — Digital Noise Elimination Enable Register 178
2.6.3.5 DNFAnENL — Digital Noise Elimination Enable Register 178
2.6.3.6 DNFCKSnC — Digital Noise Elimination Sampling Clock Source Selection Register 179
2.6.3.7 DNFCSCnSTAT — Digital Noise Elimination Sampling Clock Source Status Register 180
2.6.4 Notes for Digital Noise Filter 181
2.7 Pin State 182

Section 3 CPU System 185
3.1 Overview 185
3.1.1 Block Configuration 185
3.2 CPU 187
3.2.1 Core Functions 187
3.2.1.1 Features 187
3.2.1.2 Register Set 188
3.2.2 Instruction Cache and Data Buffer 228
3.2.2.1 Features 228
3.2.2.2 Instruction Cache Function 229
3.2.2.3 Data Buffer Function 230
3.2.3 Reliability Functions 231
3.2.3.1 PE Guard Function (PEG) 231
3.2.3.2 PE’s Internal Peripheral Device Protection Function (IPG) 236
3.2.3.3 System Error Notification Control Function (SEG) 243
3.2.3.4 Checker Core 249
3.3 Processor Element Identifier 249
3.4 Usage Notes 250
3.4.1 Synchronization of Store Instruction Completion and Subsequent Instruction Generation Execution 250
3.4.2 Accesses to Registers by Bit-Manipulation Instructions 251
3.4.3 Ensuring Coherency after Code Flash Programming 251
3.4.4 Overwriting Context when Acknowledging Multiple Exceptions 251
3.4.5 Usage Notes on Prefetching 251

3.4.6 Initialization of Register Set ... 253
3.4.7 Usage Note when Exception is Acknowledged ... 253

Section 4 Address Space ... 254

4.1 Address Space ... 254
4.2 Address Space Viewed from Each Bus Master ... 255
4.2.1 Space in which instructions can be fetched ... 255
4.2.2 Data space accessible by PE1 ... 255
4.2.3 Data space accessible by DMA (DMAC, DTS) ... 255
4.2.4 Data space accessible by H-Bus master ... 255
4.3 Write-Protected Registers ... 257
4.3.1 Overview ... 257
4.3.1.1 Functional Overview ... 257
4.3.1.2 Write Procedure to Write-Protected Registers ... 257
4.3.1.3 Interrupt during Write Sequence ... 258
4.3.1.4 Emulation Break during Write Sequence ... 259
4.3.1.5 Write-Protection Target Registers ... 259
4.3.2 Registers ... 262
4.3.2.1 List of Registers ... 262
4.3.2.2 Port Register Protection ... 263
4.3.2.3 Core Voltage Monitor (CVM) Register Protection ... 265
4.3.2.4 LVI/Reset/Clock Controller/BIST Register Protection ... 267
4.3.2.5 Clock Monitor Register Protection ... 269
4.3.2.6 Error Control Module (ECM) Register Protection ... 271
4.3.2.7 FLMDCNT Register Protection ... 273

Section 5 Operating Modes ... 275

5.1 Operating Modes ... 275
5.2 Register Specifications ... 276
5.2.1 List of Registers ... 276
5.2.2 MODER — Operating Mode Indicating Register ... 276

Section 6 Interrupt ... 277

6.1 Overview ... 277
6.1.1 Reset Sources ... 277
6.2 Register Specifications ... 278
6.2.1 Register Configuration ... 278
6.2.2 EIC0 - EIC383 — EI Level Interrupt Control Registers 0 to 383 ... 280
6.2.3 IMR0 - IMR11 — EI Level Interrupt Mask Registers 0 to 11 ... 282
6.2.4 EIBD0 - EIBD383 — EI Level Interrupt Bind Registers 0 to 383 ... 283
6.2.5 FNC — FE Level NMI Control Register ... 284
6.2.6 FIC — FE Level Interrupt Control Register ... 284
6.2.7 SINTR0 - SINTR4 — Software Interrupt Registers ... 285
6.2.8 PINT0 — PINT7 — Peripheral Interrupt Status Registers
PINTCLR0 - PINTCLR7 — Peripheral Interrupt Status Clear Registers ... 286
6.2.9 FEINTF — FEINT Factor Register ... 290

6.2.10 FEINTFC — FEINT Factor Clear Register 291
6.3 Interrupt Sources 292
6.3.1 NMI Interrupts 292
6.3.2 INTPn Interrupts 292
6.3.3 ECM Interrupts 292
6.3.4 Software Interrupts 292
6.3.5 On-Chip Peripheral Module Interrupts 292
6.4 Interrupt Exception Handler and Priority Operations 293
6.5 Operation 303
6.5.1 External Interrupts (NMI / INTP) 303
6.5.2 Software Interrupt 303
6.5.3 DTS Interrupt Merge Function 303
6.5.4 Interrupt Processing Flow 304
6.5.4.1 NMI Processing Flow 304
6.5.4.2 External Interrupt Processing Flow 305
6.5.4.3 Software Interrupt Processing Flow 306
6.5.4.4 DTS Interrupt Processing Flow 307
6.6 Interrupt Response Times 309
6.7 Using Interrupt Request Signals to Initiate Data Transfer 309

Section 7 DMA 310

7.1 Overview 310
7.1.1 Overview 310
7.1.2 Reset Sources 310
7.1.3 Term Definition 311
7.2 DMA Function 312
7.2.1 Basic Operation of DMA Transfer 312
7.2.1.1 Transfer Mode 312
7.2.1.2 Executing a DMA Cycle 312
7.2.1.3 Updating Transfer Information 312
7.2.1.4 Last Transfer and Address Reload Transfer 313
7.2.1.5 Transfer Completion Interrupt and Transfer Count Match Interrupt Outputs 313
7.2.1.6 Continuous Transfer 314
7.2.2 Channel Priority Order 316
7.2.2.1 DMAC Channel Arbitration 316
7.2.2.2 DTS Channel Arbitration 317
7.2.2.3 Interface Arbitration 318
7.2.3 Reload Function 319
7.2.3.1 Overview of the Reload Function 319
7.2.3.2 Operation of Reload Function 1 319
7.2.3.3 Reload Function 2 320
7.2.3.4 Timing of Setting DMAC Reload Registers 322
7.2.3.5 Timing of Setting DTS Reload Information 322
7.2.4 Chain Function 323
7.2.4.1 Overview 323
7.2.4.2 Setting Up the Chain Function 324

7.2.4.3 Caution for Using the Chain Function 324
7.2.5 DMAC Operation 325
7.2.5.1 Types of DMA Transfer Requests and Assigning DMA Transfer Requests 325
7.2.5.2 Generating and Accepting a Software DMA Transfer Request 325
7.2.6 DTS Operation 326
7.2.6.1 Types of DMA Transfer Requests and Assigning DMA Transfer Requests 326
7.2.6.2 Generating and Accepting a DMA Transfer Request 326
7.2.6.3 Executing DMA Transfer 326
7.2.6.4 DTSRAM Access 327
7.3 Suspension, Resume, Transfer Abort, and Clearing a DMA Transfer Request 328
7.3.1 DMA Suspension and Resume by Software Control 328
7.3.2 Suspension, Resume, and Transfer Abort of a DMAC Channel 328
7.3.3 Suspension, Resume, and Transfer Abort of a DTS 330
7.3.4 Masking and Clearing a Hardware DMA Transfer Request by the DTFR 331
7.3.5 Masking and Clearing a Hardware DMA Transfer Request by the DTSFSL 332
7.3.6 List of Suspend, Resume, and Transfer Abort Functions 333
7.4 Error Control 334
7.4.1 Type of Error 334
7.4.2 DMA Transfer Error 334
7.4.2.1 Operation of a DMAC When DMA Transfer Error Occurs 334
7.4.2.2 Operation of a DTS When DMA Transfer Error Occurs 334
7.4.3 DTSRAM Error 335
7.5 Reliability Function 336
7.5.1 Overview 336
7.5.2 Register Access Protection Function 336
7.5.2.1 Identifying the Accessing Master 336
7.5.2.2 Special Master Access 336
7.5.2.3 General Master Access 336
7.5.2.4 Channel Assignment 336
7.5.2.5 Illegal Access 337
7.5.3 Master Information Inherit Function 338
7.5.4 Other Reliability Functions 338
7.5.4.1 Restriction on the Next Channel in the Chain 338
7.6 Setting Up DMA Transfer 339
7.6.1 Overview of Setting Up DMA 339
7.6.2 Setting Up the Overall DMA Operation 340
7.6.3 Setting Up the DMA Channel Setting 341
7.6.3.1 Setting Up the DMAC Channel Setting 341
7.6.3.2 Setting Up the DTS Channel Setting 342
7.7 DMA Trigger Source 343
7.7.1 List of DMA Trigger Sources 343
7.8 DTS Trigger Source 347
7.8.1 List of DTS Trigger Sources 347
7.9 Global Register 351
7.9.1 List of Global Register Addresses 351
7.9.2 Details of Global Registers 353

7.9.2.1 DMACTL — DMA Control Register ... 353
7.9.2.2 DTSCTL1 — DTS Control Register 1 ... 354
7.9.2.3 DTSCTL2 — DTS Control Register 2 ... 355
7.9.2.4 DTSSTS — DTS Status Register ... 356
7.9.2.5 DMACER — DMAC Error Register ... 357
7.9.2.6 DTSER1 — DTS Error Register 1 ... 358
7.9.2.7 DTSER2 — DTS Error Register 2 ... 359
7.9.2.8 DTSERC — DTS Error Clear Register ... 360
7.9.2.9 DM0CMV — DMAC0 Register Access Protection Violation Register ... 361
7.9.2.10 DM1CMV — DMAC1 Register Access Protection Violation Register ... 362
7.9.2.11 DTSCMV — DTS Register Access Protection Violation Register ... 363
7.9.2.12 CMVC — Register Access Protection Violation Clear Register ... 364
7.9.2.13 DTSPRn — DTS Channel Priority Setting (n = 0 to 7) ... 365
7.9.2.14 DTRECCTL — DTSRAM ECC Control Register ... 369
7.9.2.15 DTRERINT — DTSRAM Error Notification Control Register ... 370
7.9.2.16 DTRTSCTL — DTSRAM Test Control Register ... 371
7.9.2.17 DTRTWDAT — DTSRAM Test Write Data Register ... 372
7.9.2.18 DTRTRDAT — DTSRAM Test Read Data Register ... 373
7.9.2.19 DMnnCM — DMAC Channel Master Setting (nn = 00 to 07, 10 to 17) ... 374
7.9.2.20 DTSnnnCM — DTS Channel Master Setting Register (nnn = 000 to 127) ... 375
7.10 DMAC Channel Register ... 377
7.10.1 DMAC Channel Register Address ... 377
7.10.2 Details of DMAC Channel Registers ... 378
7.10.2.1 DSAn — DMAC Source Address Register ... 378
7.10.2.2 DDAn — DMAC Destination Address Register ... 379
7.10.2.3 DTCn — DMAC Transfer Count Register ... 380
7.10.2.4 DTCTn — DMAC Transfer Control Register ... 381
7.10.2.5 DRSAn — DMAC Reload Source Address Register ... 384
7.10.2.6 DRDAn — DMAC Reload Destination Address Register ... 385
7.10.2.7 DRTCn — DMAC Reload Transfer Count Register ... 386
7.10.2.8 DTCCn — DMAC Transfer Count Compare Register ... 387
7.10.2.9 DCENn — DMAC Channel Operation Enable Setting Register ... 388
7.10.2.10 DCSTn — DMAC Transfer Status Register ... 389
7.10.2.11 DCSTSn — DMAC Transfer Status Set Register ... 391
7.10.2.12 DCSTCn — DMAC Transfer Status Clear Register ... 392
7.10.2.13 DTFRn — DTFR Setting Register ... 393
7.10.2.14 DTFRRQn — DTFR Transfer Request Status Register ... 394
7.10.2.15 DTFRRQCn — DTFR Transfer Request Clear Register ... 395
7.11 DTS Channel Register ... 396
7.11.1 Transfer information of the DTS (TI) ... 396
7.11.1.1 Structure of the TI ... 396
7.11.1.2 Organization of the TI in the DTSRAM ... 397
7.11.1.3 Accessing the TI ... 398
7.11.1.4 Caution about Accessing the TI ... 398
7.11.2 DTS Channel Register Address ... 399
7.11.3 Details of DTS Channel Registers ... 400
7.11.3.1 DTSAnnn — DTS Source Address Register ... 400
7.11.3.2 DTDAnnn — DTS Destination Address Register ... 401
7.11.3.3 DTTCnnn — DTS Transfer Count Register ... 402

7.11.3.4 DTTCTnnn — DTS Transfer Control Register 403
7.11.3.5 DTRSAnnn — DTS Reload Source Address Register 406
7.11.3.6 DTRDAnnn — DTS Reload Destination Address Register 407
7.11.3.7 DTRTCnnn — DTS Reload Transfer Count Register 408
7.11.3.8 DTTCCnnn — DTS Transfer Count Compare Register 409
7.11.3.9 DTFSLnnn — DTSFSL Operation Setting Register 410
7.11.3.10 DTFSTnnn — DTSFSL Transfer Request Status Register 411
7.11.3.11 DTFSSnnn — DTSFSL Transfer Request Set Register 412
7.11.3.12 DTFSCnnn — DTSFSL Transfer Request Clear Register 413

Section 8 Reset 414

8.1 Features 414
8.2 Overview 415
8.2.1 Reset Output ($\overline{\text{RESETOUT}}$) 415
8.3 Register Specifications 416
8.3.1 List of Registers 416
8.3.2 RESF — Reset Source Determination Register 417
8.3.3 RESFC — Reset Source Clear Register 418
8.3.4 POF — Power-On Clear Flag Register 419
8.3.5 POFC — Power-On Clear Flag Clear Register 420
8.3.6 SWRESA — Software Reset Request Register 421
8.4 Software Reset 422
8.5 Usage Notes 422

Section 9 Power Supply Circuit 423

9.1 Features 423
9.2 Configuration of Power Supply Circuit 424
9.3 Example of Connection of Power Management IC 428
9.4 Power-on Sequence 428

Section 10 Power Supply Voltage Monitor 429

10.1 Core Voltage Monitor (CVM) 429
10.1.1 Functions 429
10.1.2 Block Diagram 429
10.1.3 Self-Diagnosis 430
10.2 Low-Voltage Detection Circuit (LVI) 434
10.2.1 LVI Reference Voltage 434
10.2.2 LVI Error Signal (LVIRES) 434
10.2.3 LVI Setting Procedure 435
10.3 Power-on Reset (POCRES) 436
10.4 Registers 437
10.4.1 List of Registers 437
10.4.2 CVMF — CVM Factor Register 438
10.4.3 CVMFC — CVM Factor Clear Register 439

10.4.4 CVMDE — CVM Detection Enable Register 440
10.4.5 CVMDEW — CVM Detection Enable Setting Register 441
10.4.6 CVMDMASK — CVM Detection Output Mask Register 442
10.4.7 CVMDIAG — CVM Diagnostic Function Control Register 443
10.4.8 CVMMON — CVM Monitor Register 444
10.4.9 CVMREN— CVM Reset Enable Register 445
10.4.10 LVICNT — LVI Control Register 446

Section 11 Temperature Sensor 447

11.1 Overview of RH850/P1x Temperature Sensor 447
11.1.1 Units 447
11.1.2 Register Base Address 447
11.1.3 Clock Supply 447
11.1.4 Reset Sources 447
11.2 Overview 448
11.2.1 Functional Overview 448
11.2.2 Block Diagram 448
11.3 Register 449
11.3.1 Register List 449
11.3.2 TSN0CR — Temperature Sensor Control Register 449
11.3.3 TSN0STAT — Temperature Sensor Status Register 450
11.3.4 TSN0DIAG — Temperature Sensor Diagnosis Control Register 451
11.3.5 TSNREFD — Temperature Sensor Reference Temperature Storage Register 452
11.4 Functions 453
11.4.1 Temperature Measurement 453
11.4.2 Error Notification 454
11.4.3 Self-Diagnosis 454
11.5 Calculating the Temperature 455

Section 12 Clock Controller 456

12.1 Features 456
12.2 Type of Clocks 456
12.3 Input/Output Pins 458
12.3.1 How to Connect a Crystall Oscillator 458
12.3.2 Notes on Board Design 458
12.4 Clock Output Function 459
12.4.1 Features 459
12.4.2 Configuration 459
12.4.3 Register Specifications 460
12.4.3.1 CKSCnCTL — Clock Selection Control Register n (n = 0, 1) 461
12.4.3.2 CSCnSTAT — Clock Selection Status Register n (n = 0, 1) 462
12.4.3.3 CLKDnDIV — Clock Division Register n (n = 0, 1) 463
12.4.3.4 CLKDnSTAT — Clock Status Register n (n = 0, 1) 464
12.4.3.5 ADCKSC0CTL — A/D Clock Selection Control Register 0 465
12.4.3.6 ADCKSC0STAT — A/D Clock Selection Status Register 0 466

12.5 Operation 467
12.5.1 Operation when EXTCLKnO Clock Divider Function is Used 467

Section 13 Clocked Serial Interface G (CSIG) 468

13.1 Features of RH850/P1x CSIG 468
13.1.1 Number of Units 468
13.1.2 Register Base Address 468
13.1.3 Clock Supply 469
13.1.4 Interrupt Request 469
13.1.5 Reset Sources 469
13.1.6 External Input/Output Signals 470
13.1.7 Data Consistency Check 470
13.1.8 Combinations of Pins and Ports 470
13.2 Overview 471
13.2.1 Functional Overview 471
13.2.2 Functional Description 472
13.2.3 Block Diagram 473
13.3 Registers 474
13.3.1 List of Registers 474
13.3.2 CSIGnCTL0 — CSIGn Control Register 0 475
13.3.3 CSIGnCTL1 — CSIGn Control Register 1 476
13.3.4 CSIGnCTL2 — CSIGn Control Register 2 478
13.3.5 CSIGnSTR0 — CSIGn Status Register 0 479
13.3.6 CSIGnSTCR0 — CSIGn Status Clear Register 0 481
13.3.7 CSIGnBCTL0 — CSIGn Rx-only Mode Control Register 0 482
13.3.8 CSIGnCFG0 — CSIGn Configuration Register 0 483
13.3.9 CSIGnTX0W — CSIGn Transmission Register 0 for Word Access 485
13.3.10 CSIGnTX0H — CSIGn Transmission Register 0 for Half Word Access 486
13.3.11 CSIGnRX0 — CSIGn Reception Register 0 486
13.3.12 List of Caution 487
13.4 Interrupt Sources 488
13.4.1 Interrupt Delay 488
13.4.2 INTCSIG0IC (Communication Status Interrupt) 489
13.4.3 INTCSIG0IR (Reception Status Interrupt) 490
13.4.4 INTCSIG0IRE (Communication Error Interrupt) 490
13.5 Operation 491
13.5.1 Master/Slave Mode 491
13.5.1.1 Master Mode 491
13.5.1.2 Slave Mode 492
13.5.2 Master/Slave Connections 493
13.5.2.1 One Master and One Slave 493
13.5.3 Transmission Clock Selection 494
13.5.4 Data Transfer Modes 495
13.5.4.1 Transmit-Only Mode 495
13.5.4.2 Receive-Only Mode 495

13.5.4.3 Transmit/Receive Mode ... 495
13.5.5 Data Length Selection ... 496
13.5.5.1 Data Length Selection Without Extended Length ... 496
13.5.5.2 Data Length Selection with Extended Data Length ... 496
13.5.6 Serial Data Direction Select Function ... 498
13.5.7 Communication Timing in Slave Mode ... 499
13.5.8 Handshake Function ... 500
13.5.8.1 Slave Mode ... 500
13.5.8.2 Master Mode ... 501
13.5.9 Loop-Back Mode ... 502
13.5.10 Error Detection ... 503
13.5.10.1 Data Consistency Check ... 503
13.5.10.2 Parity Check ... 504
13.5.10.3 Overrun Error ... 505
13.6 Operating Procedure ... 507
13.6.1 Transmission/Reception by DMA in Master Mode ... 507

Section 14 Clocked Serial Interface H (CSIH) ... 509
14.1 Features of RH850/P1x CSIH ... 509
14.1.1 Number of Units ... 509
14.1.2 Register Base Address ... 510
14.1.3 Clock Supply ... 510
14.1.4 Interrupt Requests ... 511
14.1.5 Reset Sources ... 511
14.1.6 External Input/Output Signals ... 512
14.1.7 Data Consistency Check ... 513
14.1.8 Combinations of Pins and Ports ... 514
14.2 Overview ... 516
14.2.1 Functional Overview ... 516
14.2.2 Functional Overview Description ... 517
14.2.3 Block Diagram ... 518
14.3 Registers ... 519
14.3.1 List of Registers ... 519
14.3.2 CSIHnCTL0 — CSIHn Control Register 0 ... 520
14.3.3 CSIHnCTL1 — CSIHn Control Register 1 ... 521
14.3.4 CSIHnCTL2 — CSIHn Control Register 2 ... 524
14.3.5 CSIHnSTR0 — CSIHn Status Register 0 ... 526
14.3.6 CSIHnSTCR0 — CSIHn Status Clear Register 0 ... 530
14.3.7 CSIHnMCTL0 — CSIHn Memory Control Register 0 ... 531
14.3.8 CSIHnMCTL1 — CSIHn Memory Control Register 1 ... 532
14.3.9 CSIHnMCTL2 — CSIHn Memory Control Register 2 ... 533
14.3.10 CSIHnMRWP0 — CSIHn Memory Read/Write Pointer Register 0 ... 535
14.3.11 CSIHnCFGx — CSIHn Configuration Register x ... 537
14.3.12 CSIHnTX0W — CSIHn Transmit Data Register 0 for Word Access ... 542
14.3.13 CSIHnTX0H — CSIHn Transmit Data Register 0 for Half Word Access ... 544
14.3.14 CSIHnRX0W — CSIHn Receive Data Register 0 for Word Access ... 545

14.3.15 CSIHnRX0H — CSIHn Receive Data Register 0 for Half Word Access 546
14.3.16 CSIHnBRSy — CSIHn Baud Rate Setting Register y (y = 0 to 3) 547
14.3.17 SELCSIHDMA — CSIH DMA Select Register 548
14.3.18 List of Caution 550
14.4 Interrupt Sources 553
14.4.1 Overview 553
14.4.2 Interrupt Delay 554
14.4.3 INTCSIHnIC (Communication Status Interrupt) 555
14.4.3.1 INTCSIHnIC in Direct Access Mode 556
14.4.3.2 INTCSIHnIC in FIFO Mode 557
14.4.3.3 INTCSIHnIC in Job Mode 558
14.4.4 INTCSIHnIR (Receive Status Interrupt) 559
14.4.4.1 INTCSIHnIR in Direct Access Mode 559
14.4.4.2 INTCSIHnIR in Dual Buffer Mode 560
14.4.5 INTCSIHnIRE (Reception Error Interrupt) 561
14.4.6 INTCSIHnIJC (Job Completion Interrupt) 562
14.5 Operation 563
14.5.1 Operating Modes (Master/Slave) 563
14.5.1.1 Master mode 563
14.5.1.2 Slave Mode 564
14.5.2 Master/Slave Connections 565
14.5.2.1 One Master and One Slave 565
14.5.2.2 One Master and Multiple Slaves 565
14.5.3 Chip Selection (CS) Features 567
14.5.3.1 Configuration Registers 567
14.5.3.2 CS Example 569
14.5.3.3 Job Concept 569
14.5.4 Chip Select Timing Details 570
14.5.4.1 Changing the Clock Phase 570
14.5.4.2 Changing the Data Phase 572
14.5.5 Transmission Clock Selection 573
14.5.6 CSIH Buffer Memory 575
14.5.6.1 FIFO Mode 575
14.5.6.2 Dual Buffer Mode 576
14.5.6.3 Transmit-Only Buffer Mode 576
14.5.6.4 Direct Access Mode 576
14.5.7 Data Transfer Modes 577
14.5.7.1 Transmit-Only Mode 577
14.5.7.2 Receive-Only Mode 577
14.5.7.3 Transmit/Receive Mode 577
14.5.7.4 Summary 577
14.5.8 Data Length Selection 578
14.5.8.1 Data Length Between 2 and 16 bits 578
14.5.8.2 Data Length Greater than 16 Bits 579
14.5.9 Serial Data Direction Selection 581
14.5.10 Slave Select (SS) Function 582
14.5.10.1 Communication Timing Using SS Function 582
14.5.10.2 CSIHTSSO Operation 583

14.5.11 Handshake Function ... 584
14.5.11.1 Slave Mode ... 584
14.5.11.2 Master Mode ... 587
14.5.12 Error Detection ... 588
14.5.12.1 Data Consistency Check ... 588
14.5.12.2 Parity Check ... 590
14.5.12.3 Time-Out Error ... 591
14.5.12.4 Overflow Error ... 592
14.5.12.5 Overrun Error ... 594
14.5.13 Loop-Back Mode ... 597
14.5.14 CPU-Controlled High Priority Communication Function ... 599
14.5.15 Enforced Chip Select Idle Setting ... 602
14.6 Operating Procedures ... 603
14.6.1 Procedures in Direct Access Mode ... 603
14.6.1.1 Transmit/Receive in Master Mode when Job Mode is Disabled ... 603
14.6.1.2 Transmit/Receive in Master Mode when Job Mode is Enabled ... 605
14.6.2 Procedures in Transmit-Only Buffer Mode ... 607
14.6.2.1 Transmit/Receive in Master Mode when Job Mode is Disabled ... 607
14.6.2.2 Transmit/Receive in Master Mode when Job Mode is Enabled ... 609
14.6.3 Procedures in Dual Buffer Mode ... 611
14.6.3.1 Transmit/Receive in Master Mode when Job Mode is Disabled ... 611
14.6.3.2 Transmit/Receive in Master Mode when Job Mode is Enabled ... 613
14.6.3.3 Transmit/Receive in Slave Mode when Job Mode is Disabled ... 615
14.6.4 Procedures in FIFO Mode ... 617
14.6.4.1 Transmit/Receive in Master Mode when Job Mode is Disabled ... 617
14.6.4.2 Transmit/Receive in Mater Mode when Job Mode is Enabled ... 619

Section 15 Serial Communication Interface 3 (SCI3) ... 621
15.1 Overview ... 621
15.1.1 Number of Units and Channels ... 621
15.1.2 Register Base Addresses ... 622
15.1.3 Clock Supply ... 622
15.1.4 Interrupt Request ... 622
15.1.5 Reset Sources ... 623
15.1.6 External Input/Output Signals ... 623
15.1.7 Combination of Pins and Ports ... 624
15.2 Outline of Functions ... 625
15.2.1 Serial Communication Modes ... 625
15.2.2 Block Diagram ... 626
15.3 Register Descriptions ... 627
15.3.1 SCI3nRSR — Receive Shift Register ... 628
15.3.2 SCI3nRDR — Receive Data Register ... 628
15.3.3 SCI3nTDR — Transmit Data Register ... 628
15.3.4 SCI3nTSR — Transmit Shift Register ... 628
15.3.5 SCI3nSMR — Serial Mode Register ... 629
15.3.6 SCI3nSCR — Serial Control Register ... 630

15.3.7 SCI3nSSR — Serial Status Register ... 632
15.3.8 SCI3nSCMR — Serial Transfer Format Register ... 634
15.3.9 SCI3nSEMR — Serial Extended Mode Register ... 635
15.3.10 SCI3nBRR — Bit Rate Register ... 636
15.3.11 SCI3nMDDR — Modulation Duty Register ... 639
15.4 Operation in Asynchronous Mode ... 640
15.4.1 Transmission/Reception Format ... 641
15.4.2 Receive Data Sampling Timing and Reception Margin ... 642
15.4.3 Clock ... 643
15.4.4 Double-Speed Operation ... 643
15.4.5 SCI3 Initialization (Asynchronous Mode) ... 644
15.4.6 Serial Data Transmission (Asynchronous Mode) ... 645
15.4.7 Serial Data Reception (Asynchronous Mode) ... 648
15.5 Multi-Processor Communication Function ... 652
15.5.1 Overview and Sample Connection ... 652
15.5.2 Multi-Processor Serial Data Transmission ... 653
15.5.3 Multi-Processor Serial Data Reception ... 654
15.6 Operation in Clock Synchronous Mode ... 658
15.6.1 Clock ... 658
15.6.2 SCI3 Initialization (Clock Synchronous Mode) ... 659
15.6.3 Serial Data Transmission (Clock Synchronous Mode) ... 660
15.6.4 Serial Data Reception (Clock Synchronous Mode) ... 663
15.6.5 Simultaneous Serial Data Transmission and Reception (Clock Synchronous Mode) ... 665
15.7 Bit Rate Modulation Function ... 667
15.8 Interrupt Sources ... 668
15.9 Usage Notes ... 669
15.9.1 Break Detection and Processing ... 669
15.9.2 Mark State and Break Output ... 669
15.9.3 Receive Error Flags and Transmit Operations in Clock Synchronous Mode ... 669
15.9.4 Relationship between Writing to SCI3nTDR and the TDRE Flag ... 669
15.9.5 Restrictions on Using an External Clock for Transmission in Clock Synchronous Mode ... 670
15.9.6 External Clock Input in Clock Synchronous Mode ... 670

Section 16 LIN/UART Interface (RLIN3) ... 671
16.1 Features of RH850/P1x RLIN3 ... 671
16.1.1 Number of Units and Channels ... 671
16.1.2 Register Base Address ... 672
16.1.3 Clock Supply ... 672
16.1.4 Interrupt Request ... 672
16.1.5 Reset Sources ... 672
16.1.6 External Input/output Signals ... 673
16.1.7 Combination of Pin Name and Port Name ... 673
16.2 Overview ... 674
16.2.1 Functional Overview ... 674

16.2.2 Block Diagram ... 677
16.2.3 Description of Blocks ... 677
16.3 Registers ... 678
16.3.1 List of Registers ... 678
16.3.2 LIN Master Related Registers ... 679
16.3.2.1 RLN3nLWBR — LIN Wake-Up Baud Rate Select Register ... 679
16.3.2.2 RLN3nLBRP0 — LIN Baud Rate Prescaler 0 Register ... 680
16.3.2.3 RLN3nLBRP1 — LIN Baud Rate Prescaler 1 Register ... 681
16.3.2.4 RLN3nLSTC — LIN Self-Test Control Register ... 682
16.3.2.5 RLN3nLMD — LIN Mode Register ... 683
16.3.2.6 RLN3nLBFC — LIN Break Field Configuration Register ... 685
16.3.2.7 RLN3nLSC — LIN Space Configuration Register ... 686
16.3.2.8 RLN3nLWUP — LIN Wake-Up Configuration Register ... 687
16.3.2.9 RLN3nLIE — LIN Interrupt Enable Register ... 688
16.3.2.10 RLN3nLEDE — LIN Error Detection Enable Register ... 690
16.3.2.11 RLN3nLCUC — LIN Control Register ... 692
16.3.2.12 RLN3nLTRC — LIN Transmission Control Register ... 693
16.3.2.13 RLN3nLMST — LIN Mode Status Register ... 694
16.3.2.14 RLN3nLST — LIN Status Register ... 695
16.3.2.15 RLN3nLEST — LIN Error Status Register ... 697
16.3.2.16 RLN3nLDFC — LIN Data Field Configuration Register ... 699
16.3.2.17 RLN3nLIDB — LIN ID Buffer Register ... 701
16.3.2.18 RLN3nLCBR — LIN Checksum Buffer Register ... 702
16.3.2.19 RLN3nLDBRb — LIN Data Buffer b Register (b = 1 to 8) ... 703
16.3.3 UART Related Registers ... 705
16.3.3.1 RLN3nLWBR — LIN Wake-Up Baud Rate Select Register ... 705
16.3.3.2 RLN3nLBRP01 — UART Baud Rate Prescaler 01 Register ... 706
16.3.3.3 RLN3nLMD — UART Mode Register ... 707
16.3.3.4 RLN3nLBFC — UART Configuration Register ... 708
16.3.3.5 RLN3nLSC — UART Space Configuration Register ... 710
16.3.3.6 RLN3nLEDE —UART Error Detection Enable Register ... 711
16.3.3.7 RLN3nLCUC — UART Control Register ... 712
16.3.3.8 RLN3nLTRC — UART Transmission Control Register ... 713
16.3.3.9 RLN3nLMST — UART Mode Status Register ... 714
16.3.3.10 RLN3nLST — UART Status Register ... 715
16.3.3.11 RLN3nLEST — UART Error Status Register ... 717
16.3.3.12 RLN3nLDFC — UART Data Field Configuration Register ... 719
16.3.3.13 RLN3nLIDB — UART ID Buffer Register ... 720
16.3.3.14 RLN3nLUDB0 — UART Data 0 Buffer Register ... 720
16.3.3.15 RLN3nLDBRb — UART Data Buffer b Register (b = 1 to 8) ... 721
16.3.3.16 RLN3nLUOER — UART Operation Enable Register ... 722
16.3.3.17 RLN3nLUOR1 — UART Option Register 1 ... 723
16.3.3.18 RLN3nLUTDR — UART Transmission Data Register ... 725
16.3.3.19 RLN3nLURDR — UART Reception Data Register ... 726
16.3.3.20 RLN3nLUWTDR — UART Wait Transmission Data Register ... 727
16.4 Interrupt Sources ... 728
16.5 Modes ... 729
16.6 LIN Reset Mode ... 731

16.7 LIN Mode 732
16.7.1 LIN Master Mode 734
16.7.1.1 Header Transmission 734
16.7.1.2 Response Transmission 735
16.7.1.3 Response Reception 736
16.7.2 Data Transmission/Reception 737
16.7.2.1 Data Transmission 737
16.7.2.2 Data Reception 738
16.7.3 Transmission/Reception Data Buffering 739
16.7.3.1 Transmission of LIN Frames 739
16.7.3.2 Reception of LIN Frames 740
16.7.3.3 Multi-Byte Response Transmission/Reception Function 741
16.7.4 Wake-up Transmission/Reception 742
16.7.4.1 Wake-up Transmission 742
16.7.4.2 Wake-up Reception 743
16.7.4.3 Wakeup Collision 743
16.7.5 Status 744
16.7.6 Error Status 745
16.7.6.1 LIN Master Mode 745
16.8 UART Mode 747
16.8.1 Transmission 747
16.8.1.1 Continuous Transmission 749
16.8.1.2 UART Buffer Transmission 750
16.8.1.3 Data Transmission 752
16.8.1.4 Transmission Start Wait Function 753
16.8.2 Reception 754
16.8.2.1 Data Reception 755
16.8.3 Expansion Bits 756
16.8.3.1 Expansion Bit Transmission 756
16.8.3.2 Expansion Bit Reception 756
16.8.3.3 Expansion Bit Reception (with Expansion Bit Comparison) 757
16.8.3.4 Expansion Bit Reception (with Data Comparison) 758
16.8.4 Status 759
16.8.5 Error Status 760
16.9 LIN Self-Test Mode 761
16.9.1 Change to LIN Self-Test Mode 763
16.9.2 Transmission in LIN Master Self-Test Mode 764
16.9.3 Reception in LIN Master Self-Test Mode 765
16.9.4 Terminating LIN Self-Test Mode 766
16.10 Baud Rate Generator 767
16.10.1 LIN Master Mode 767
16.10.2 UART Mode 769
16.11 Noise Filter 770

Section 17 CAN Interface (RS-CAN) 772
17.1 Features of RH850/P1x RS-CAN 772

17.1.1 Number of Units and Channels 772
17.1.2 Register Base Address 773
17.1.3 Clock Supply 773
17.1.4 Interrupt Request 774
17.1.5 Reset Sources 774
17.1.6 External Input/Output Signals 774
17.1.7 Combination of Pin Name and Port Name 775
17.2 Overview 776
17.2.1 Functional Overview 776
17.2.2 Block Diagram 778
17.3 Registers 779
17.3.1 List of Registers 779
17.3.2 RSCAN0CmCFG — Channel Configuration Register (m = 0 to 2) 798
17.3.3 RSCAN0CmCTR — Channel Control Register (m = 0 to 2) 800
17.3.4 RSCAN0CmSTS — Channel Status Register (m = 0 to 2) 804
17.3.5 RSCAN0CmERFL — Channel Error Flag Register (m = 0 to 2) 806
17.3.6 RSCAN0GCFG — Global Configuration Register 810
17.3.7 RSCAN0GCTR — Global Control Register 813
17.3.8 RSCAN0GSTS — Global Status Register 815
17.3.9 RSCAN0GERFL — Global Error Flag Register 816
17.3.10 RSCAN0GTINTSTS0 — Global TX Interrupt Status Register 0 818
17.3.11 RSCAN0GTSC — Global Timestamp Counter Register 821
17.3.12 RSCAN0GAFLECTR — Receive Rule Entry Control Register 822
17.3.13 RSCAN0GAFLCFG0 — Receive Rule Configuration Register 0 823
17.3.14 RSCAN0GAFLIDj — Receive Rule ID Register (j = 0 to 15) 825
17.3.15 RSCAN0GAFLMj — Receive Rule Mask Register (j = 0 to 15) 827
17.3.16 RSCAN0GAFLP0j — Receive Rule Pointer 0 Register (j = 0 to 15) 828
17.3.17 RSCAN0GAFLP1j — Receive Rule Pointer 1 Register (j = 0 to 15) 830
17.3.18 RSCAN0RMNB — Receive Buffer Number Register 831
17.3.19 RSCAN0RMNDy — Reception Buffer New Data Register y (y = 0, 1) 832
17.3.20 RSCAN0RMIDq — Receive Buffer ID Register (q = 0 to 47)* 833
17.3.21 RSCAN0RMPTRq — Receive Buffer Pointer Register (q = 0 to 47)* 834
17.3.22 RSCAN0RMDF0q — Receive Buffer Data Field 0 Register (q = 0 to 47)* 836
17.3.23 RSCAN0RMDF1q — Receive Buffer Data Field 1 Register (q = 0 to 47)* 837
17.3.24 RSCAN0RFCCx — Receive FIFO Buffer Configuration and Control Register (x = 0 to 7) 838
17.3.25 RSCAN0RFSTSx — Receive FIFO Buffer Status Register (x = 0 to 7) 840
17.3.26 RSCAN0RFPCTRx — Receive FIFO Buffer Pointer Control Register (x = 0 to 7) 842
17.3.27 RSCAN0RFIDx — Receive FIFO Buffer Access ID Register (x = 0 to 7) 843
17.3.28 RSCAN0RFPTRx — Receive FIFO Buffer Access Pointer Register (x = 0 to 7) 844
17.3.29 RSCAN0RFDF0x — Receive FIFO Buffer Access Data Field 0 Register (x = 0 to 7) 845
17.3.30 RSCAN0RFDF1x — Receive FIFO Buffer Access Data Field 1 Register (x = 0 to 7) 846
17.3.31 RSCAN0CFCCk — Transmit/Receive FIFO Buffer Configuration and Control Register k (k = 0 to 8)* 847
17.3.32 RSCAN0CFSTSk — Transmit/Receive FIFO Buffer Status Register (k = 0 to 8)* 851

17.3.33 RSCAN0CFPCTRk — Transmit/Receive FIFO Buffer Pointer Control Register (k = 0 to 8)* ... 854
17.3.34 RSCAN0CFIDk — Transmit/Receive FIFO Buffer Access ID Register (k = 0 to 8)* ... 856
17.3.35 RSCAN0CFPTRk — Transmit/Receive FIFO Buffer Access Pointer Register (k = 0 to 8)* ... 858
17.3.36 RSCAN0CFDF0k — Transmit/Receive FIFO Buffer Access Data Field 0 Register (k = 0 to 8)* ... 860
17.3.37 RSCAN0CFDF1k — Transmit/Receive FIFO Buffer Access Data Field 1 Register (k = 0 to 8)* ... 861
17.3.38 RSCAN0FESTS — FIFO Empty Status Register ... 862
17.3.39 RSCAN0FFSTS — FIFO Full Status Register ... 864
17.3.40 RSCAN0FMSTS — FIFO Message Lost Status Register ... 866
17.3.41 RSCAN0RFISTS — Receive FIFO Buffer Interrupt Flag Status Register ... 868
17.3.42 RSCAN0CFRISTS — Transmit/Receive FIFO Buffer Receive Interrupt Flag Status Register ... 869
17.3.43 RSCAN0CFTISTS — Transmit/Receive FIFO Buffer Transmit Interrupt Flag Status Register ... 870
17.3.44 RSCAN0TMCp — Transmit Buffer Control Register (p = 0 to 47)* ... 871
17.3.45 RSCAN0TMSTSp — Transmit Buffer Status Register (p = 0 to 47)* ... 873
17.3.46 RSCAN0TMTRSTSy — Transmit Buffer Transmit Request Status Register y (y = 0, 1) ... 875
17.3.47 RSCAN0TMTARSTSy — Transmit Buffer Transmit Abort Request Status Register y (y = 0, 1) ... 877
17.3.48 RSCAN0TMTCSTSy — Transmit Buffer Transmit Complete Status Register y (y = 0, 1) ... 879
17.3.49 RSCAN0TMTASTSy — Transmit Buffer Transmit Abort Status Register y (y = 0, 1) ... 881
17.3.50 RSCAN0TMIECy — Transmit Buffer Interrupt Enable Configuration Register y (y = 0, 1) ... 883
17.3.51 RSCAN0TMIDp — Transmit Buffer ID Register (p = 0 to 47)* ... 885
17.3.52 RSCAN0TMPTRp — Transmit Buffer Pointer Register (p= 0 to 47)* ... 887
17.3.53 RSCAN0TMDF0p — Transmit Buffer Data Field 0 Register (p = 0 to 47)* ... 889
17.3.54 RSCAN0TMDF1p — Transmit Buffer Data Field 1 Register (p = 0 to 47)* ... 890
17.3.55 RSCAN0TXQCCm — Transmit Queue Configuration and Control Register (m = 0 to 2) ... 891
17.3.56 RSCAN0TXQSTSm — Transmit Queue Status Register (m = 0 to 2) ... 893
17.3.57 RSCAN0TXQPCTRm — Transmit Queue Pointer Control Register (m = 0 to 2) ... 895
17.3.58 RSCAN0THLCCm — Transmit History Configuration and Control Register (m = 0 to 2) ... 896
17.3.59 RSCAN0THLSTSm — Transmit History Status Register (m = 0 to 2) ... 898
17.3.60 RSCAN0THLACCm — Transmit History Access Register (m = 0 to 2) ... 900
17.3.61 RSCAN0THLPCTRm — Transmit History Pointer Control Register (m = 0 to 2) ... 901
17.3.62 RSCAN0GTSTCFG — Global Test Configuration Register ... 902
17.3.63 RSCAN0GTSTCTR — Global Test Control Register ... 904
17.3.64 RSCAN0GLOCKK — Global Lock Key Register ... 905
17.3.65 RSCAN0RPGACCr — RAM Test Page Access Register (r = 0 to 63) ... 906
17.4 Interrupt Sources ... 907
17.5 CAN Modes ... 910
17.5.1 Global Modes ... 910

17.5.1.1 Global Stop Mode ... 912
17.5.1.2 Global Reset Mode ... 912
17.5.1.3 Global Test Mode ... 912
17.5.1.4 Global Operating Mode ... 912
17.5.2 Channel Modes ... 913
17.5.2.1 Channel Stop Mode ... 914
17.5.2.2 Channel Reset Mode ... 914
17.5.2.3 Channel Halt Mode ... 914
17.5.2.4 Channel Communication Mode ... 915
17.5.2.5 Bus Off State ... 916
17.6 Reception Function ... 918
17.6.1 Data Processing Using the Receive Rule Table ... 918
17.6.1.1 Acceptance Filter Processing ... 919
17.6.1.2 DLC Filter Processing ... 920
17.6.1.3 Routing Processing ... 920
17.6.1.4 Label Addition Processing ... 920
17.6.1.5 Mirror Function Processing ... 920
17.6.1.6 Timestamp ... 921
17.7 Transmission Functions ... 922
17.7.1 Transmit Priority Determination ... 923
17.7.2 Transmission Using Transmit Buffers ... 923
17.7.2.1 Transmit Abort Function ... 923
17.7.2.2 One-Shot Transmission Function (Retransmission Disabling Function) ... 924
17.7.3 Transmission Using FIFO Buffers ... 924
17.7.3.1 Interval Transmission Function ... 925
17.7.4 Transmission Using Transmit Queues ... 927
17.7.5 Transmit History Function ... 927
17.8 Gateway Function ... 929
17.9 Test Function ... 930
17.9.1 Standard Test Mode ... 930
17.9.2 Listen-Only Mode ... 930
17.9.3 Self-Test Mode (Loopback Mode) ... 931
17.9.3.1 Self-Test Mode 0 (External Loopback Mode) ... 931
17.9.3.2 Self-Test Mode 1 (Internal Loopback Mode) ... 932
17.9.4 RAM Test ... 933
17.9.5 Inter-Channel Communication Test ... 933
17.10 RS-CAN Setting Procedure ... 934
17.10.1 Initial Settings ... 934
17.10.1.1 Clock Setting ... 935
17.10.1.2 Bit Timing Setting ... 935
17.10.1.3 Communication Speed Setting ... 936
17.10.1.4 Receive Rule Setting ... 937
17.10.1.5 Buffer Setting ... 938
17.10.2 Reception Procedure ... 940
17.10.2.1 Receive Buffer Reading Procedure ... 940
17.10.2.2 FIFO Buffer Reading Procedure ... 942
17.10.3 Transmission Procedure ... 945

17.10.3.1 Procedure for Transmission from Transmit Buffers 945
17.10.3.2 Procedure for Transmission from Transmit/Receive FIFO Buffers 949
17.10.3.3 Procedure for Transmission from the Transmit Queue 953
17.10.3.4 Transmit History Buffer Reading Procedure 954
17.10.4 Test Settings 955
17.10.4.1 Self-Test Mode Setting Procedure 955
17.10.4.2 Procedure for Releasing the Protection 956
17.10.4.3 RAM Test Setting Procedure 957
17.10.4.4 Inter-Channel Communication Test Setting Procedure 958
17.11 Notes on the RS-CAN Module 959

Section 18 FlexRay (FLXA) 960

18.1 Overview of RH850/P1x FlexRay 960
18.1.1 Number of Units and Channels 960
18.1.2 Register Base Addresses 960
18.1.3 Clock Supply 961
18.1.4 Interrupts 961
18.1.5 Reset Sources 961
18.1.6 I/O Signals 961
18.1.7 Combinations of Pins and Ports 962
18.1.8 Functions 962
18.1.9 Block Diagram 963
18.2 Register 967
18.2.1 Register Map 967
18.2.2 FlexRay Operation register 971
18.2.2.1 FLXAnFROC — FlexRay Operation Control Register 971
18.2.2.2 FLXAnFROS — FlexRay Operation Status Register 974
18.2.3 Special Registers 977
18.2.3.1 FLXAnFRLCK — FlexRay Lock Register 977
18.2.4 Interrupt Registers 978
18.2.4.1 FLXAnFREIR — FlexRay Error Interrupt Register 978
18.2.4.2 FLXAnFRSIR — FlexRay Status Interrupt Register 984
18.2.4.3 FLXAnFREILS — FlexRay Error Interrupt Line Select Register 990
18.2.4.4 FLXAnFRSILS — FlexRay Status Interrupt Line Select Register 992
18.2.4.5 FLXAnFREIES — FlexRay Error Interrupt Enable Set Register 994
18.2.4.6 FLXAnFREIER — FlexRay Error Interrupt Enable Reset Register 996
18.2.4.7 FLXAnFRSIES — FlexRay Status Interrupt Enable Set Register 998
18.2.4.8 FLXAnFRSIER — FlexRay Status Interrupt Enable Reset Register 1000
18.2.4.9 FLXAnFRILE — FlexRay Interrupt Line Enable Register 1002
18.2.5 FlexRay Timer Registers 1003
18.2.5.1 FLXAnFRT0C — FlexRay Timer 0 Configuration Register 1003
18.2.5.2 FLXAnFRT1C — FlexRay Timer 1 Configuration Register 1005
18.2.5.3 FLXAnFRT2C — FlexRay Timer 2 Configuration Register 1007
18.2.5.4 FLXAnFRSTPW1 — FlexRay Stop Watch Register 1 1009
18.2.5.5 FLXAnFRSTPW2 — FlexRay Stop Watch Register 2 1012
18.2.6 CC Control Registers 1013
18.2.6.1 FLXAnFRSUCC1 — FlexRay SUC Configuration Register 1 1013

18.2.6.2 FLXAnFRSUCC2 — FlexRay SUC Configuration Register 2 1021
18.2.6.3 FLXAnFRSUCC3 — FlexRay SUC Configuration Register 3 1022
18.2.6.4 FLXAnFRNEMC — FlexRay NEM Configuration Register 1023
18.2.6.5 FLXAnFRPRTC1 — FlexRay PRT Configuration Register 1 1024
18.2.6.6 FLXAnFRPRTC2 — FlexRay PRT Configuration Register 2 1027
18.2.6.7 FLXAnFRMHDC — FlexRay MHD Configuration Register 1029
18.2.6.8 FLXAnFRGTUC1 — FlexRay GTU Configuration Register 1 1030
18.2.6.9 FLXAnFRGTUC2 — FlexRay GTU Configuration Register 2 1031
18.2.6.10 FLXAnFRGTUC3 — FlexRay GTU Configuration Register 3 1032
18.2.6.11 FLXAnFRGTUC4 — FlexRay GTU Configuration Register 4 1034
18.2.6.12 FLXAnFRGTUC5 — FlexRay GTU Configuration Register 5 1036
18.2.6.13 FLXAnFRGTUC6 — FlexRay GTU Configuration Register 6 1038
18.2.6.14 FLXAnFRGTUC7 — FlexRay GTU Configuration Register 7 1039
18.2.6.15 FLXAnFRGTUC8 — FlexRay GTU Configuration Register 8 1040
18.2.6.16 FLXAnFRGTUC9 — FlexRay GTU Configuration Register 9 1041
18.2.6.17 FLXAnFRGTUC10 — FlexRay GTU Configuration Register 10 1043
18.2.6.18 FLXAnFRGTUC11 — FlexRay GTU Configuration Register 11 1044
18.2.7 CC Status Registers 1046
18.2.7.1 FLXAnFRCCSV — FlexRay CC Status Vector Register 1046
18.2.7.2 FLXAnFRCCEV — FlexRay CC Error Vector Register 1050
18.2.7.3 FLXAnFRSCV — FlexRay Slot Counter Value Register 1052
18.2.7.4 FLXAnFRMTCCV — FlexRay Macrotick and Cycle Counter Value Register 1053
18.2.7.5 FLXAnFRRCV — FlexRay Rate Correction Value Register 1054
18.2.7.6 FLXAnFROCV — FlexRay Offset Correction Value Register 1055
18.2.7.7 FLXAnFRSFS — FlexRay Sync Frame Status Register 1056
18.2.7.8 FLXAnFRSWNIT — FlexRay Symbol Window and NIT Status Register 1059
18.2.7.9 FLXAnFRACS — FlexRay Aggregated Channel Status Register 1062
18.2.7.10 FLXAnFRESIDm — FlexRay Even Sync ID Register m (m = 1 to 15) 1066
18.2.7.11 FLXAnFROSIDm — FlexRay Odd Sync ID Register m (m = 1 to 15) 1068
18.2.7.12 FLXAnFRNMVm — FlexRay Network Management Vector Register m (m = 1 to 3) 1070
18.2.8 Message Buffer Control Registers 1071
18.2.8.1 FLXAnFRMRC — FlexRay Message RAM Configuration Register 1071
18.2.8.2 FLXAnFRFRF — FlexRay FIFO Rejection Filter Register 1075
18.2.8.3 FLXAnFRFRFM — FlexRay FIFO Rejection Filter Mask Register 1077
18.2.8.4 FLXAnFRFCL — FlexRay FIFO Critical Level Register 1078
18.2.9 Message Buffer Status Registers 1079
18.2.9.1 FLXAnFRMHDS — FlexRay Message Handler Status Register 1079
18.2.9.2 FLXAnFRLDTS — FlexRay Last Dynamic Transmit Slot Register 1082
18.2.9.3 FLXAnFRFSR — FlexRay FIFO Status Register 1083
18.2.9.4 FLXAnFRMHDF — FlexRay Message Handler Constraints Flags Register 1085
18.2.9.5 FLXAnFRTXRQm — FlexRay Transmission Request m (m = 1 to 4) 1089
18.2.9.6 FLXAnFRNDATm — FlexRay New Data Register m (m = 1 to 4) 1090
18.2.9.7 FLXAnFRMBSCm — FlexRay Message Buffer Status Changed Register m (m = 1 to 4) 1091
18.2.10 Input Buffer 1092
18.2.10.1 FLXAnFRWRDSm — FlexRay Write Data Section Register m (m = 1 to 64) 1093
18.2.10.2 FLXAnFRWRHS1 — FlexRay Write Header Section Register 1 1094
18.2.10.3 FLXAnFRWRHS2 — FlexRay Write Header Section Register 2 1097
18.2.10.4 FLXAnFRWRHS3 — FlexRay Write Header Section Register 3 1098

18.2.10.5 FLXAnFRIBCM — FlexRay Input Buffer Command Mask Register 1099
18.2.10.6 FLXAnFRIBCR — FlexRay Input Buffer Command Request Register 1101
18.2.11 Output Buffer 1103
18.2.11.1 FLXAnFRRDDSm — FlexRay Read Data Section Register m (m = 1 to 64) 1103
18.2.11.2 FLXAnFRRDHS1 — FlexRay Read Header Section Register 1 1104
18.2.11.3 FLXAnFRRDHS2 — FlexRay Read Header Section Register 2 1106
18.2.11.4 FLXAnFRRDHS3 — FlexRay Read Header Section Register 3 1108
18.2.11.5 FLXAnFRMBS — FlexRay Message Buffer Status Register 1110
18.2.11.6 FLXAnFROBCM — FlexRay Output Buffer Command Mask Register 1115
18.2.11.7 FLXAnFROBCR — FlexRay Output Buffer Command Request Register 1117
18.2.12 Data Transfer Control Register 1120
18.2.12.1 FLXAnFRITC — FlexRay Input Transfer Configuration Register 1120
18.2.12.2 FLXAnFROTC — FlexRay Output Transfer Configuration Register 1122
18.2.12.3 FLXAnFRIBA — FlexRay Input Pointer Table Base Address Register 1125
18.2.12.4 FLXAnFRFBA — FlexRay FIFO Pointer Table Base Address Register 1126
18.2.12.5 FLXAnFROBA — FlexRay Output Pointer Table Base Address Register 1127
18.2.12.6 FLXAnFRIQC — FlexRay Input Queue Control Register 1128
18.2.12.7 FLXAnFRUIR — FlexRay User Input Transfer Request Register 1129
18.2.12.8 FLXAnFRUOR — FlexRay User Output Transfer Request Register 1130
18.2.12.9 FLXAnFRAHBC — FlexRay H-Bus Configuration Register 1132
18.2.13 Data Transfer Status Register 1133
18.2.13.1 FLXAnFRITS — FlexRay Input Transfer Status Register 1133
18.2.13.2 FLXAnFROTS — FlexRay Output Transfer Status Register 1137
18.2.13.3 FLXAnFRAES — FlexRay Access Error Status Register 1142
18.2.13.4 FLXAnFRAEA — FlexRay Access Error Address Register 1145
18.2.13.5 FLXAnFRDAm — FlexRay message Data Available Register m (m = 0 to 3) 1146
18.3 Functional Description 1148
18.3.1 FlexRay Module Operation Control 1148
18.3.1.1 FlexRay Module Enable 1148
18.3.1.2 FlexRay Module Disable 1149
18.3.2 Communication Cycle 1150
18.3.2.1 Static Segment 1150
18.3.2.2 Dynamic Segment 1151
18.3.2.3 Symbol Window 1151
18.3.2.4 Network Idle Time (NIT) 1151
18.3.2.5 Configuration of NIT Start and Offset Correction Start 1152
18.3.3 Communication Modes 1153
18.3.3.1 Time-triggered Distributed (TT-D) 1153
18.3.4 Clock Synchronization 1154
18.3.4.1 Global Time 1154
18.3.4.2 Local Time 1154
18.3.4.3 Synchronization Process 1154
18.3.5 Error Handling 1156
18.3.5.1 Clock Correction Failed Counter 1156
18.3.5.2 Passive to Active Counter 1157
18.3.5.3 HALT Command 1157
18.3.5.4 FREEZE Command 1157
18.3.6 Communication Controller States 1158
18.3.6.1 Communication Controller State Diagram 1158

18.3.6.2 DEFAULT_CONFIG State ... 1160
18.3.6.3 CONFIG State ... 1160
18.3.6.4 READY State ... 1161
18.3.6.5 WAKEUP State ... 1162
18.3.6.6 STARTUP State ... 1166
18.3.6.7 NORMAL_ACTIVE State ... 1171
18.3.6.8 NORMAL_PASSIVE State ... 1171
18.3.6.9 HALT State ... 1172
18.3.7 Network Management ... 1173
18.3.8 Filtering and Masking ... 1174
18.3.8.1 Slot Counter Filtering ... 1174
18.3.8.2 Cycle Counter Filtering ... 1175
18.3.8.3 Channel ID Filtering ... 1176
18.3.8.4 FIFO Filtering ... 1176
18.3.9 Transmit Process ... 1177
18.3.9.1 Static Segment ... 1177
18.3.9.2 Dynamic Segment ... 1177
18.3.9.3 Transmit Buffers ... 1177
18.3.9.4 Frame Transmission ... 1178
18.3.9.5 Null Frame Transmission ... 1179
18.3.10 Receive Process ... 1180
18.3.10.1 Dedicated Receive Buffers ... 1180
18.3.10.2 Frame Reception ... 1180
18.3.10.3 Null Frame Reception ... 1181
18.3.11 FIFO Function ... 1182
18.3.11.1 Description ... 1182
18.3.11.2 Configuration of the FIFO ... 1183
18.3.11.3 Access to the FIFO ... 1184
18.3.12 Message Handling ... 1185
18.3.12.1 Reconfiguration of Message Buffers ... 1185
18.3.12.2 Host access to Message RAM ... 1187
18.3.12.3 FlexRay Protocol Controller Access to Message RAM ... 1193
18.3.13 Message RAM ... 1194
18.3.13.1 Header Partition ... 1196
18.3.13.2 Data Partition ... 1200
18.3.13.3 Message Data Integrity Check ... 1201
18.3.13.4 Host Handling of Access Errors ... 1203
18.3.14 Module Interrupt ... 1204
18.3.15 Assignment of FlexRay Configuration Parameters ... 1205
18.3.16 Usage of Data Transfer ... 1207
18.3.16.1 Input Data Transfer ... 1208
18.3.16.2 Output Data Transfer ... 1217
18.3.16.3 Data Structure Transfer Scheduling ... 1227
18.3.16.4 Behavior in Case of Data Transfer Access Error ... 1228
18.3.16.5 Behaviors in Case of RAM Read Errors ... 1229

Section 19 Single Edge Nibble Transmission (RSENT) ... 1231

19.1 RH850/P1x RSENT Overview ... 1231

19.1.1 Number of Channels ... 1231
19.1.2 Register Base Addresses ... 1231
19.1.3 Clock Supply ... 1231
19.1.4 Interrupts and DMA/DTS ... 1232
19.1.5 Reset Sources ... 1232
19.1.6 External Input/Output Signals ... 1233
19.1.7 Combinations of Pins and Ports ... 1233
19.2 Functions ... 1234
19.2.1 Block Diagram ... 1235
19.3 Registers ... 1236
19.3.1 RSENTnTSPC — RSENT Timestamp Register ... 1237
19.3.2 RSENTnTSC — RSENT Timestamp Counter ... 1239
19.3.3 RSENTnCC — RSENT Communications Configuration Register ... 1240
19.3.4 RSENTnBRP — RSENT Baud Rate Prescaler Register ... 1243
19.3.5 RSENTnIDE — RSENT Interrupt/DMA Enable Register ... 1245
19.3.6 RSENTnMDC — RSENT Mode Control Register ... 1248
19.3.7 RSENTnSPCT — RSENT SPC Transmission Register ... 1249
19.3.8 RSENTnMST — RSENT Mode Status Register ... 1250
19.3.9 RSENTnCS — RSENT Communication Status Register ... 1252
19.3.10 RSENTnCSC — RSENT Communication Status Clear Register ... 1256
19.3.11 RSENTnSRTS — RSENT Slow Channel Receive Timestamp Register ... 1259
19.3.12 RSENTnSRXD — RSENT Slow Channel Receive Data Register ... 1260
19.3.13 RSENTnCPL — RSENT Calibration Pulse Length Register ... 1262
19.3.14 RSENTnML — RSENT Message Length Register ... 1263
19.3.15 RSENTnFRTS — RSENT Fast Channel Receive Timestamp Register ... 1264
19.3.16 RSENTnFRXD — RSENT Fast Channel Receive Data Register ... 1265
19.3.17 RSENTTSSEL — RSENT Timestamp Mode Selection Register ... 1267
19.4 Modes of Operation ... 1269
19.4.1 RESET Mode ... 1270
19.4.2 CONFIGURATION Mode ... 1270
19.4.3 OPERATION IDLE Mode ... 1270
19.4.4 OPERATION ACTIVE Mode ... 1270
19.4.5 Register Behavior in Operation Modes ... 1271
19.5 Clock Configuration ... 1272
19.5.1 Timestamp ... 1272
19.5.1.1 Timestamp Clock Configuration ... 1272
19.5.1.2 Timestamp Counter Operation ... 1272
19.5.2 Communication Clock Configuration ... 1275
19.5.2.1 RX BRP Setting ... 1275
19.5.2.2 RX and SPC Tick Settings ... 1275
19.6 RSENT Operation ... 1276
19.6.1 Changing Operation Modes ... 1276
19.6.2 Message Reception ... 1279
19.6.2.1 Calibration Pulse Reception ... 1279
19.6.2.2 Data Nibble Reception ... 1279

19.6.2.3 Fast Channel Message Reception 1280
19.6.2.4 Fast Channel Reception Flow 1284
19.6.2.5 Slow Channel Message Reception 1285
19.6.2.6 Slow Channel Reception Flow 1287
19.6.2.7 DMA Flow 1288
19.6.2.8 Error Flagging 1289
19.7 SPC Function 1291
19.7.1 Multiplexing of the SENTnRX and SENTnSPCO Pin Functions 1293
19.8 Interrupts and Checks 1294
Section 20 PSI5 1296
20.1 Features of RH850/P1x PSI5 1296
20.1.1 Number of Channels 1296
20.1.2 Register Base Addresses 1296
20.1.3 Clock Supply 1296
20.1.4 Interrupts and DMA 1297
20.1.5 Reset Sources 1297
20.1.6 External Input/Output Signals 1297
20.2 Functions 1298
20.2.1 Block Configuration 1299
20.3 Registers 1300
20.3.1 PSI5nCHCTRL — PSI5 Channel Control Register 1302
20.3.2 PSI5nIPTIMERCTRL — PSI5 IP Timer Control Register 1303
20.3.3 PSI5nIPTIMER — PSI5 IP Timer Counter 1304
20.3.4 PSI5nOPMCOMM — PSI5 Operating Mode/Communication Mode Register 1305
20.3.5 PSI5nOPMBITRATE — PSI5 Operating-Mode Bit Rate Register 1306
20.3.6 PSI5nOPMCYCT — PSI5 Operating-Mode Cycle Time Register 1307
20.3.7 PSI5nPSI5INT — PSI5 Interrupt Status Register 1308
20.3.8 PSI5nEMRXDATA — PSI5 Receive Data Emulation Register 1309
20.3.9 PSI5nEMRXDST — PSI5 Receive Data Status Emulation Register 1310
20.3.10 PSI5nEMRXDTIM — PSI5 Receive Data IP Timer Emulation Register 1311
20.3.11 PSI5nEMRXDFIFO — PSI5 Receive Data FIFO Emulation Register 1312
20.3.12 PSI5nEMRXMRXMSG — PSI5 Receive-Message Receive Message Emulation Register 1313
20.3.13 PSI5nEMRXMRXST — PSI5 Receive-Message Channel Receive Status Emulation Register 1314
20.3.14 PSI5nEMRXMRXTIM — PSI5 Receive-Message Receive Timestamp Emulation Register 1315
20.3.15 PSI5nEMRXMFIFO — PSI5 Receive-Message Channel FIFO Emulation Register 1316
20.3.16 PSI5nTXSETTING — PSI5 Transmission Setting Register 1317
20.3.17 PSI5nSYNCCTRL — PSI5 Synchronization Control Register 1319
20.3.18 PSI5nTXST — PSI5 Transmission Status Register 1320
20.3.19 PSI5nTXSTCLR — PSI5 Transmission Status Clear Register 1321
20.3.20 PSI5nTXSTINTEN — PSI5 Transmission Status Interrupt Enable Register 1322
20.3.21 PSI5nTXDCTRL — PSI5 Transmit Data Control Register 1323
20.3.22 PSI5nTXDATA — PSI5 Transmit Data Register 1324

20.3.23 PSI5nRXSPLSET — PSI5 Receive Sampling Setting Register 1326
20.3.24 PSI5nRXSmSET — PSI5 Receive Slot m Setting Register (m = 1 to 8)..... 1327
20.3.25 PSI5nRXDATA — PSI5 Receive Data Register..... 1328
20.3.26 PSI5nRXDST — PSI5 Receive Data Status Register 1329
20.3.27 PSI5nRXDTIM — PSI5 Receive Data IP Timer Register 1330
20.3.28 PSI5nRXDFIFO — PSI5 Receive Data FIFO Register 1331
20.3.29 PSI5nRXMODST — PSI5 Receive Module Status Register 1332
20.3.30 PSI5nRXMODSTCLR — PSI5 Receive Module Status Clear Register 1333
20.3.31 PSI5nRXMODSTINTEN — PSI5 Receive Module Status Interrupt Enable Register..... 1334
20.3.32 PSI5nRXMSET — PSI5 Receive Message Channel Setting Register..... 1335
20.3.33 PSI5nRXMRXMSG — PSI5 Receive-Message Receive Message Register 1336
20.3.34 PSI5nRXMRXST — PSI5 Receive-message Channel Receive Status Register 1338
20.3.35 PSI5nRXMRXTIM — PSI5 Receive-message Channel Receive Timestamp Register.. 1339
20.3.36 PSI5nRXMFIFO — PSI5 Receive-message Channel FIFO Register 1340
20.3.37 PSI5nRXMMST — PSI5 Receive-message Channel Module Status Register 1341
20.3.38 PSI5nRXMMSTCLR— PSI5 Receive-message Channel Module Status Clear Register 1342
20.3.39 PSI5nRXMMSTINTEN — PSI5 Receive-message Channel Module Status Interrupt Enable Register 1343
20.3.40 PSI5TSSEL — PSI5 Timestamp Function Mode Selection Register 1344
20.4 Interrupt 1345
20.5 Operation 1346
20.5.1 Setting Operation Mode..... 1346
20.5.1.1 Setting for Transmit/Receive Mode 1347
20.5.1.2 Setting for Data Reception 1347
20.5.1.3 Initial Setting for Asynchronous Mode..... 1347
20.5.1.4 Initial Setting for Synchronous Mode..... 1348
20.5.1.5 Setting for Serial Message Reception 1349
20.5.1.6 Initial Setting in Asynchronous Mode 1349
20.5.1.7 Initial Setting in Synchronous Mode 1349
20.5.1.8 Setting for Timestamping 1349
20.5.2 Operation Flow 1351
20.5.2.1 Starting Operation 1351
20.5.2.2 Flow of Data Reception 1352
20.5.2.3 Flow of Data Transmission..... 1353
20.5.2.4 Serial Message Reception Flow..... 1355
20.5.2.5 Parity and CRC Errors in Received Data 1356
20.5.3 PAS Compatibility Mode..... 1357
20.5.4 Baud Rate..... 1357

Section 21 Window Watchdog Timer (WDTA)..... 1358

21.1 Features of RH850/P1x WDTA..... 1358
21.1.1 Units and Channels 1358
21.1.2 Register Base Address..... 1358
21.1.3 Clock Supply..... 1359
21.1.4 Interrupt Request..... 1359
21.1.5 Reset Sources 1359

21.2 Overview 1360
21.2.1 Functional Overview 1360
21.2.2 Block Diagram 1362
21.3 Registers 1363
21.3.1 List of Registers 1363
21.3.2 WDTAnWDTE — WDTA Enable Register 1364
21.3.3 WDTAnEVAC — WDTA Enable VAC Register 1365
21.3.4 WDTAnREF — WDTA Reference Value Register 1366
21.3.5 WDTAnMD — WDTA Mode Register 1367
21.4 Interrupt Sources 1369
21.5 Function 1369
21.5.1 WDTA after Release from the Reset State 1369
21.5.1.1 Start Modes 1369
21.5.1.2 Count Clock Selection 1369
21.5.1.3 WDTA Settings after Release From The Reset State, ... 1370
21.5.1.4 Default Start Mode Timing 1371
21.5.1.5 Software Trigger Start Mode Timing 1372
21.5.2 WDTA Trigger 1373
21.5.2.1 Calculating an Activation Code when the VAC Function is Used 1373
21.5.3 WDTA Error Detection 1374
21.5.4 75% Interrupt Request Signals 1375
21.5.5 Window Function 1376

Section 22 OS Timer (OSTM) 1377
22.1 Features of RH850/P1x OSTMn 1377
22.1.1 Number of Units 1377
22.1.2 Register Base Addresses 1378
22.1.3 Clock Supply 1378
22.1.4 Interrupt Request 1379
22.1.5 Reset Sources 1379
22.1.6 External Input/Output Signal 1379
22.2 Overview 1380
22.2.1 Functional Overview 1380
22.2.2 Block Diagram 1381
22.2.3 Counter clock 1382
22.2.4 Output Modes (OSTM0 and OSTM1) 1384
22.2.5 Interrupt Requests (INTOSTMn) 1385
22.3 Registers 1386
22.3.1 List of Registers 1386
22.3.2 Details of OSTMn Registers 1387
22.3.2.1 OSTMnCMP — OSTMn Compare Register 1387
22.3.2.2 OSTMnCNT — OSTMn Counter Register 1388
22.3.2.3 OSTMnTO — OSTMn Output Register 1389
22.3.2.4 OSTMnTOE — OSTMn Output Enable Register 1389
22.3.2.5 OSTMnTE — OSTMn Count Enable Status Register 1390
22.3.2.6 OSTMnTS — OSTMn Count Start Trigger Register 1390

22.3.2.7 OSTMnTT — OSTMn Count Stop Trigger Register 1391
22.3.2.8 OSTMnCTL — OSTMn Control Register 1391
22.3.2.9 IC0CKSEL0 — OSTM0 Clock Select Register 1392
22.3.2.10 IC0CKSEL1 — OSTM1 Clock Select Register 1394
22.4 Operation 1396
22.4.1 Starting and Stopping OSTMn 1396
22.4.2 Interval Timer Mode 1397
22.4.2.1 Basic Operation in Interval Timer Mode 1397
22.4.2.2 Operation when OSTMnCMP = 0000 0000_H 1400
22.4.2.3 Setting Procedure for Interval Timer Mode 1401
22.4.3 Free-Running Comparison Mode 1402
22.4.3.1 Basic Operation in Free-Running Comparison Mode 1402
22.4.3.2 Operation when OSTMnCMP = 0000 0000_H 1404
22.4.3.3 Setting Procedure for Free-Running Comparison Mode 1405

Section 23 Timer Array Unit D (TAUD) 1406
23.1 Features of RH850/P1x TAUD 1406
23.1.1 Units and Channels 1406
23.1.2 Register Base Address 1406
23.1.3 Clock Supply 1407
23.1.4 Interrupt Requests 1407
23.1.5 Reset Sources 1408
23.1.6 External Input/Output Signals 1409
23.2 Overview 1410
23.2.1 Functional Overview 1410
23.2.2 Terms 1411
23.2.3 Functional List of Timer Operations 1412
23.2.4 TAUD I/O and Interrupt Request Signals 1413
23.2.5 Block Diagram 1414
23.2.6 Description of Blocks 1415
23.3 Registers 1416
23.3.1 List of Registers 1416
23.3.2 Details of TAUDn Prescaler Registers 1417
23.3.2.1 TAUDnTPS — TAUDn Prescaler Clock Select Register 1417
23.3.2.2 TAUDnBRS — TAUDn Prescaler Baud Rate Setting Register 1420
23.3.3 Details of TAUDn Control Registers 1421
23.3.3.1 TAUDnCDRm — TAUDn Channel Data Register 1421
23.3.3.2 TAUDnCNTm — TAUDn Channel Counter Register 1421
23.3.3.3 TAUDnCMORm — TAUDn Channel Mode OS Register 1423
23.3.3.4 TAUDnCMURm — TAUDn Channel Mode User Register 1426
23.3.3.5 TAUDnCSRm — TAUDn channel status register 1427
23.3.3.6 TAUDnCSCm - TAUDn Channel Status Clear Register 1428
23.3.3.7 TAUDnTS — TAUDn Channel Start Trigger Register 1428
23.3.3.8 TAUDnTE — TAUDn Channel Enable Status Register 1429
23.3.3.9 TAUDnTT — TAUDn Channel Stop Trigger Register 1429
23.3.4 Details of TAUDn Simultaneous Rewrite Registers 1430
23.3.4.1 TAUDnRDE — TAUDn Channel Reload Data Enable Register 1430

23.3.4.2 TAUDnRDS — TAUDn Channel Reload Data Control Channel Select Register ... 1430
23.3.4.3 TAUDnRDM — TAUDn Channel Reload Data Mode Register ... 1431
23.3.4.4 TAUDnRDC — TAUDn Channel Reload Data Control Register ... 1431
23.3.4.5 TAUDnRDT — TAUDn Channel Reload Data Trigger Register ... 1432
23.3.4.6 TAUDnRSF — TAUDn Channel Reload Status Register ... 1432
23.3.5 Details of TAUDn Output Registers ... 1433
23.3.5.1 TAUDnTOE — TAUDn Channel Output Enable Register ... 1433
23.3.5.2 TAUDnTO — TAUDn Channel Output Register ... 1433
23.3.5.3 TAUDnTOM — TAUDn Channel Output Mode Register ... 1434
23.3.5.4 TAUDnTOC — TAUDn Channel Output Configuration Register ... 1434
23.3.5.5 TAUDnTOL — TAUDn Channel Output Active Level Register ... 1435
23.3.6 Details of TAUDn Dead Time Output Registers ... 1436
23.3.6.1 TAUDnTDE — TAUDn Channel Dead Time Output Enable Register ... 1436
23.3.6.2 TAUDnTDM — TAUDn Channel Dead Time Output Mode Register ... 1436
23.3.6.3 TAUDnTDL — TAUDn Channel Dead Time Output Level Register ... 1437
23.3.7 Details of TAUDn Real-time/Modulation Output Registers ... 1438
23.3.7.1 TAUDnTRE — TAUDn Channel Real-time Output Enable Register ... 1438
23.3.7.2 TAUDnTRC — TAUDn Channel Real-time Output Control Register ... 1438
23.3.7.3 TAUDnTRO — TAUDn Channel Real-time Output Register ... 1439
23.3.7.4 TAUDnTME — TAUDn Channel Modulation Output Enable Register ... 1439
23.4 Operating Procedure ... 1440
23.5 Concepts of Synchronous Channel Operation ... 1441
23.5.1 Rules of Synchronous Channel Operation ... 1441
23.5.2 Simultaneous Start and Stop of Synchronous Channel Counters ... 1443
23.5.2.1 Simultaneous Start and Stop within the Same Unit ... 1443
23.5.2.2 Simultaneous Start between the Units ... 1443
23.6 Simultaneous Rewrite ... 1444
23.6.1 Overview of Operations ... 1444
23.6.2 How to Control Simultaneous Rewrite ... 1446
23.6.2.1 Initial Settings ... 1447
23.6.2.2 Start Counter and Count Operation ... 1447
23.6.2.3 Simultaneous Rewrite ... 1447
23.6.3 Other General Rules of Simultaneous Rewrite ... 1448
23.6.4 Types of Simultaneous Rewrite ... 1449
23.6.4.1 Simultaneous Rewrite when the Master Channel (Re)starts Counting (Method A) ... 1449
23.6.4.2 Simultaneous Rewrite at the Peak of a Triangular Wave of Slave Channel (Method B) ... 1451
23.6.4.3 Simultaneous Rewrite when INTTAUDnIm is Generated on an Upper Channel Specified by TAUDnRDC.TAUDnRDCm (Method C1) ... 1453
23.6.4.4 Simultaneous Rewrite when INTTAUDnIm is Generated on an Upper Channel Specified by TAUDnRDC.TAUDnRDCm that in Turn is Triggered by an External Signal (Method C2) ... 1455
23.7 Channel Output Modes ... 1457
23.7.1 General Procedures for Specifying a Channel Output Mode ... 1459
23.7.2 Channel Output Modes Controlled Independently by TAUDn Signals ... 1460
23.7.2.1 Independent Channel Output Mode 1 ... 1460

23.7.2.2 Independent Channel Output Mode 1 with Real-Time Output 1460
23.7.2.3 Independent Channel Output Mode 2 1461
23.7.3 Channel Output Modes Controlled Synchronously by TAUDn Signals 1462
23.7.3.1 Synchronous Channel Output Mode 1 1462
23.7.3.2 Synchronous Channel Output Mode 1 with Non-Complementary Modulation Output..... 1462
23.7.3.3 Synchronous Channel Output Mode 2 1463
23.7.3.4 Synchronous Channel Output Mode 2 with Dead Time Output 1463
23.7.3.5 Synchronous Channel Output Mode 2 with One-Phase PWM Output 1464
23.7.3.6 Synchronous Channel Output Mode 2 with Complementary Modulation Output..... 1465
23.7.3.7 Synchronous Channel Output Mode 2 with Non-Complementary Modulation Output..... 1465
23.8 Start Timing in Each Operating Modes 1466
23.8.1 Interval Timer Mode, Judge Mode, Capture Mode, and Up/Down Count Mode..... 1466
23.8.2 Event Count Mode 1467
23.8.3 Other Operating Modes 1467
23.9 TAUDnTTOUTm Output and INTTAUDnIm Generation when Counter Starts or Restarts 1468
23.10 Interrupt Generation upon Overflow 1469
23.10.1 Combination of TAUDTTINm Input Pulse Interval Measuring Function and TAUDTTINm Input Interval Timer Function 1470
23.10.2 Combination of TAUDTTINm Input Signal Width Measuring Function and Overflow Interrupt Output Function (during TAUDTTINm Width Measurement) 1471
23.10.3 Combination of TAUDTTINm Input Position Detecting Function and Interval Timer Function..... 1472
23.10.4 Combination of TAUDTTINm Input Period Count Detecting Function and Overflow Interrupt Output Function (during TAUDTTINm Input Period Count Detection) 1473
23.11 TAUDnTTINm Edge Detection 1475
23.12 Independent Channel Operation Functions 1476
23.12.1 Interval Timer Function..... 1476
23.12.1.1 Overview 1476
23.12.1.2 Equations 1476
23.12.1.3 Block Diagram and General Timing Diagram..... 1477
23.12.1.4 Register Settings 1478
23.12.1.5 Operating Procedure for Interval Timer Function 1480
23.12.1.6 Specific Timing Diagrams..... 1481
23.12.2 TAUDnTTINm Input Interval Timer Function 1486
23.12.2.1 Overview 1486
23.12.2.2 Equations 1486
23.12.2.3 Block Diagram and General Timing Diagram..... 1487
23.12.2.4 Operating Procedure for TAUDnTTINm Input Interval Timer Function 1490
23.12.2.5 Specific Timing Diagrams..... 1491
23.12.3 Clock Divider Function..... 1492
23.12.3.1 Overview 1492
23.12.3.2 Equations 1493
23.12.3.3 Block Diagram and General Timing Diagram..... 1493
23.12.3.4 Register Settings 1494
23.12.3.5 Operating Procedure for Clock Divider Function..... 1496

23.12.3.6 Specific Timing Diagrams 1497
23.12.4 External Event Count Function 1499
23.12.4.1 Overview 1499
23.12.4.2 Equations 1499
23.12.4.3 Block Diagram and General Timing Diagram 1500
23.12.4.4 Register Settings 1501
23.12.4.5 Operating Procedure for External Event Count Function 1502
23.12.4.6 Specific Timing Diagrams 1503
23.12.5 Delay Count Function 1505
23.12.5.1 Overview 1505
23.12.5.2 Equations 1505
23.12.5.3 Block Diagram and General Timing Diagram 1506
23.12.5.4 Register Settings 1507
23.12.5.5 Operating Procedure for Delay Count Function 1508
23.12.6 One-Pulse Output Function 1509
23.12.6.1 Overview 1509
23.12.6.2 Equations 1509
23.12.6.3 Block Diagram and General Timing Diagram 1510
23.12.6.4 Register Settings 1511
23.12.6.5 Operating Procedure for One-Pulse Output Function 1513
23.12.7 TAUDnTTINm Input Pulse Interval Measurement Function 1514
23.12.7.1 Overview 1514
23.12.7.2 Equations 1515
23.12.7.3 Block Diagram and General Timing Diagram 1516
23.12.7.4 Register Settings 1517
23.12.7.5 Operating Procedure for TAUDnTTINm Input Pulse Interval Measurement Function 1518
23.12.7.6 Specific Timing Diagrams: Overflow Operation 1519
23.12.8 TAUDnTTINm Input Signal Width Measurement Function 1522
23.12.8.1 Overview 1522
23.12.8.2 Equations 1523
23.12.8.3 Block Diagram and General Timing Diagram 1523
23.12.8.4 Register Settings 1525
23.12.8.5 Operating Procedure for TAUDnTTINm Input Signal Width Measurement Function 1526
23.12.8.6 Specific Timing Diagrams: Overflow Operation 1527
23.12.9 TAUDnTTINm Input Position Detection Function 1531
23.12.9.1 Overview 1531
23.12.9.2 Equations 1531
23.12.9.3 Block Diagram and General Timing Diagram 1532
23.12.9.4 Register Settings 1533
23.12.9.5 Operating Procedure for TAUDnTTINm Input Position Detection Function 1534
23.12.9.6 Specific Timing Diagrams 1535
23.12.10 TAUDnTTINm Input Period Count Detection Function 1536
23.12.10.1 Overview 1536
23.12.10.2 Equations 1536
23.12.10.3 Block Diagram and General Timing Diagram 1537
23.12.10.4 Register Settings 1538
23.12.10.5 Operating Procedure for TAUDnTTINm Input Period Count Detection Function 1539

23.12.10.6 Specific Timing Diagrams 1540
23.12.11 TAUDnTTINm Input Pulse Interval Judgment Function 1541
23.12.11.1 Overview 1541
23.12.11.2 Block Diagram and General Timing Diagram 1542
23.12.11.3 Register Settings 1543
23.12.11.4 Operating Procedure for TAUDnTTINm Input Pulse Interval Judgment Function 1544
23.12.12 TAUDnTTINm Input Signal Width Judgment Function 1545
23.12.12.1 Overview 1545
23.12.12.2 Block Diagram and General Timing Diagram 1546
23.12.12.3 Register Settings 1547
23.12.12.4 Operating Procedure for TAUDnTTINm Input Signal Width Judgment Function 1548
23.12.13 One-Phase PWM Output Function 1549
23.12.13.1 Overview 1549
23.12.13.2 Block Diagram and General Timing Diagram 1550
23.12.13.3 Register Settings for Lower Channels 1552
23.12.13.4 Register Settings for Upper Channels 1554
23.12.13.5 Operating Procedure for One-phase PWM Output Function 1555
23.12.14 Real Time Output Function Type 1 1556
23.12.14.1 Overview 1556
23.12.14.2 Equations 1557
23.12.14.3 Block Diagram and General Timing Diagram 1557
23.12.14.4 Register Settings for Upper Channels 1559
23.12.14.5 Register Settings for Lower Channels 1561
23.12.14.6 Operating Procedure for Real-Time Output Function Type 1 1562
23.12.14.7 Specific Timing Diagrams 1563
23.12.15 Real-Time Output Function Type 2 1564
23.12.15.1 Overview 1564
23.12.15.2 Block Diagram and General Timing Diagram 1565
23.12.15.3 Register Settings for Upper Channels 1567
23.12.15.4 Register Settings for Lower Channels 1569
23.12.15.5 Operating Procedure for Real-Time Output Function Type 2 1570
23.12.15.6 Specific Timing Diagrams 1571
23.12.16 Simultaneous Rewrite Trigger Generation Function Type 1 1572
23.12.16.1 Overview 1572
23.12.16.2 Equations 1573
23.12.16.3 Block Diagram and General Timing Diagram 1574
23.12.16.4 Register Settings for Upper Channels 1576
23.12.16.5 Register Settings for Lower Channels 1577
23.12.16.6 Operating Procedure for Simultaneous Rewrite Trigger Generation Function Type 1 1578
23.13 Synchronous Channel Operation Functions 1579
23.13.1 PWM Output Function 1579
23.13.1.1 Overview 1579
23.13.1.2 Equations 1580
23.13.1.3 Block Diagram and General Timing Diagram 1581
23.13.1.4 Register Settings for the Master Channel 1583
23.13.1.5 Register Settings for Slave Channels 1585

23.13.1.6 Operating Procedure for PWM Output Function 1587
23.13.1.7 Specific Timing Diagrams..... 1588
23.13.2 One-Shot Pulse Output Function..... 1591
23.13.2.1 Overview 1591
23.13.2.2 Equations 1592
23.13.2.3 Block Diagram and General Timing Diagram..... 1592
23.13.2.4 Register Settings for the Master Channel 1595
23.13.2.5 Register Settings for Slave Channels..... 1597
23.13.2.6 Operating Procedure for One-Shot Pulse Output Function..... 1599
23.13.2.7 Specific Timing Diagrams..... 1600
23.13.3 Delay Pulse Output Function..... 1604
23.13.3.1 Overview 1604
23.13.3.2 Equations 1605
23.13.3.3 Block Diagram and General Timing Diagram..... 1606
23.13.3.4 Register Settings for the Master Channels..... 1608
23.13.3.5 Register Settings for the Slave Channel 1 1610
23.13.3.6 Register Settings for Slave Channel 2 1612
23.13.3.7 Register Settings for Slave Channel 3 1614
23.13.3.8 Operating Procedure for Delay Pulse Output Function..... 1616
23.13.3.9 Specific Timing Diagrams..... 1618
23.13.4 Offset Trigger Output Function..... 1620
23.13.4.1 Overview 1620
23.13.4.2 Equations 1621
23.13.4.3 Block Diagram and General Timing Diagram..... 1621
23.13.4.4 Register Settings for Master Channels..... 1623
23.13.4.5 Register Settings for Slave Channels..... 1625
23.13.4.6 Operating Procedure for Offset Trigger Output Function 1627
23.13.4.7 Specific Timing Diagrams..... 1628
23.13.5 A/D Conversion Trigger Output Function Type 1 1630
23.13.5.1 Overview 1630
23.13.5.2 Block Diagram and General Timing Diagram..... 1630
23.13.5.3 General Timing Diagram 1631
23.13.6 Triangle PWM Output Function 1632
23.13.6.1 Overview 1632
23.13.6.2 Equations 1633
23.13.6.3 Block Diagram and General Timing Diagram..... 1634
23.13.6.4 Register Settings for Master Channels..... 1636
23.13.6.5 Register Settings for Slave Channels..... 1638
23.13.6.6 Operating Procedure for Triangle PWM Output Function 1640
23.13.6.7 Specific Timing Diagrams..... 1641
23.13.7 Triangle PWM Output Function with Dead Time 1643
23.13.7.1 Overview 1643
23.13.7.2 Equations 1645
23.13.7.3 Block Diagram and General Timing Diagram..... 1646
23.13.7.4 Register Settings for Master Channels..... 1648
23.13.7.5 Register Settings for Slave Channel 2 1650
23.13.7.6 Register Settings for Slave Channel 3 1652
23.13.7.7 Operating Procedure for Triangle PWM Output Function with Dead Time 1654
23.13.7.8 Specific Timing Diagrams..... 1655

23.13.8 A/D Conversion Trigger Output Function Type 2 1657
23.13.8.1 Overview 1657
23.13.8.2 Block Diagram and General Timing Diagram 1657
23.13.9 Interrupt Request Signals Culling Function 1659
23.13.9.1 Overview 1659
23.13.9.2 Equations 1660
23.13.9.3 Block Diagram and General Timing Diagram 1660
23.13.9.4 Register Settings for the Master Channel 1662
23.13.9.5 Register Settings for Slave Channels 1664
23.13.9.6 Operating Procedure for Interrupt Request Signals Culling Function 1665
23.13.9.7 Specific Timing Diagrams 1666
23.14 Synchronous Non-Complementary and Complementary Modulation Output Functions 1667
23.14.1 Non-Complementary Modulation Output Function Type 1 1667
23.14.1.1 Overview 1667
23.14.1.2 Equations 1669
23.14.1.3 Block Diagram and General Timing Diagram 1670
23.14.1.4 Register Settings for Master Channels 1672
23.14.1.5 Register Settings for Slave Channel 1 1674
23.14.1.6 Register Settings for Slave Channels 2 to 7 1676
23.14.1.7 Operating Procedure for Non-Complementary Modulation Output Function Type 1 1678
23.14.1.8 Specific Timing Diagrams 1680
23.14.2 Non-Complementary Modulation Output Function Type 2 1681
23.14.2.1 Overview 1681
23.14.2.2 Equations 1683
23.14.2.3 Block Diagram and General Timing Diagram 1684
23.14.2.4 Register Settings for Master Channels 1686
23.14.2.5 Register Settings for Slave Channel 1 1688
23.14.2.6 Register Settings for slave channels 2 to 7 1690
23.14.2.7 Operating Procedure for Non-Complementary Modulation Output Function Type 2 1692
23.14.2.8 Specific Timing Diagrams 1694
23.14.3 Complementary Modulation Output Function 1695
23.14.3.1 Overview 1695
23.14.3.2 Equations 1698
23.14.3.3 Block Diagram and General Timing Diagram 1699
23.14.3.4 Register Settings for Master Channels 1701
23.14.3.5 Register Settings for Slave Channel 1 1703
23.14.3.6 Register Settings for slave channels 2, 4, and 6 1705
23.14.3.7 Register Settings for slave channels 3, 5, and 7 1707
23.14.3.8 Operating Procedure for Complementary Modulation Output Function 1709
23.14.3.9 Specific Timing Diagrams 1711

Section 24 Timer Array Unit J (TAUJ) 1713

24.1 Features of RH850/P1x TAUJ 1713
24.1.1 Units 1713
24.1.2 Register Base Address 1713
24.1.3 Clock Supply 1714

24.1.4 Interrupt Requests 1714
24.1.5 Reset Sources 1714
24.1.6 External Input/Output Signals 1715
24.2 Overview 1716
24.2.1 Functional Overview 1716
24.2.2 Terms 1717
24.2.3 Timer Operation Functions 1718
24.2.4 TAUJ I/O and Interrupt Request Signals 1718
24.2.5 Block Diagram 1719
24.2.6 Description of Blocks 1720
24.3 Registers 1721
24.3.1 List of Registers 1721
24.3.2 Details of TAUJn Prescaler Registers 1722
24.3.2.1 TAUJnTPS — TAUJn Prescaler Clock Select Register 1722
24.3.2.2 TAUJnBRS — TAUJn Prescaler Baud Rate Setting Register 1725
24.3.3 Details of TAUJn Control Registers 1726
24.3.3.1 TAUJnCDRm — TAUJn Channel Data Register 1726
24.3.3.2 TAUJnCNTm — TAUJn Channel Counter Register 1727
24.3.3.3 TAUJnCMORm — TAUJn Channel Mode OS Register 1729
24.3.3.4 TAUJnCMURm — TAUJn Channel Mode User Register 1732
24.3.3.5 TAUJnCSRm — TAUJn Channel Status Register 1733
24.3.3.6 TAUJnCSCm — TAUJn Channel Status Clear Register 1733
24.3.3.7 TAUJnTS — TAUJn Channel Start Trigger Register 1734
24.3.3.8 TAUJnTE — TAUJn Channel Enable Status Register 1734
24.3.3.9 TAUJnTT — TAUJn Channel Stop Trigger Register 1735
24.3.4 TAUJn Simultaneous Rewrite Register Details 1736
24.3.4.1 TAUJnRDE — TAUJn Channel Reload Data Enable Register 1736
24.3.4.2 TAUJnRDM — TAUJn Channel Reload Data Mode Register 1736
24.3.4.3 TAUJnRDT — TAUJn Channel Reload Data Trigger Register 1737
24.3.4.4 TAUJnRSF — TAUJn Channel Reload Status Register 1737
24.3.5 TAUJn Output Registers Details 1738
24.3.5.1 TAUJnTOE — TAUJn Channel Output Enable Register 1738
24.3.5.2 TAUJnTO — TAUJn Channel Output Register 1738
24.3.5.3 TAUJnTOM — TAUJn Channel Output Mode Register 1739
24.3.5.4 TAUJnTOC — TAUJn Channel Output Configuration Register 1740
24.3.5.5 TAUJnTOL — TAUJn Channel Output Active Level Register 1741
24.4 Operating Procedure 1742
24.5 Concepts of Synchronous Channel Operation 1743
24.5.1 Rules of Synchronous Channel Operation 1743
24.5.2 Simultaneous Start and Stop of Synchronous Channel Counters 1745
24.5.2.1 Simultaneous Start and Stop within a TAUJ Unit 1745
24.5.2.2 Simultaneous Start between TAUJ Units 1745
24.6 Simultaneous Rewrite 1746
24.6.1 Functional Overview 1746
24.6.2 How to Control Simultaneous Rewrite 1746
24.6.2.1 Initial Settings 1748
24.6.2.2 Start Counter and Count Operation 1748

24.6.2.3 Simultaneous Rewrite 1748
24.6.3 Other General Rules for Simultaneous Rewrite 1748
24.6.4 Simultaneous Rewrite Procedure 1749
24.7 Channel Output Modes 1751
24.7.1 General Procedures for Specifying a Channel Output Mode 1753
24.7.2 Channel Output Modes Controlled Independently by TAUJn Signals 1753
24.7.3 Channel Output Modes Controlled Synchronously by TAUJn Signals 1754
24.8 Start Timing in Each Operating Modes 1755
24.8.1 Interval Timer Mode, Capture Mode, and Count Capture Mode 1755
24.8.2 Other Operating Modes 1756
24.9 TAUJnTTOUTm Output and INTTAUJnIm Generation when Counter Starts or Restarts 1757
24.10 Interrupt Generation upon Overflow 1758
24.10.1 Combination of the TAUJnTTINm Input Position Detection Function and the Interval Timer Function 1759
24.11 TAUJnTTINm Edge Detection 1760
24.12 Independent Channel Operation Functions 1761
24.12.1 Interval Timer Function 1761
24.12.1.1 Overview 1761
24.12.1.2 Equations 1761
24.12.1.3 Block Diagram and General Timing Diagram 1762
24.12.1.4 Register Settings 1763
24.12.1.5 Operating Procedure for Interval Timer Function 1765
24.12.1.6 Specific Timing Diagrams 1766
24.12.2 TAUJnTTINm Input Interval Timer Function 1768
24.12.2.1 Overview 1768
24.12.2.2 Equations 1768
24.12.2.3 Block Diagram and General Timing Diagram 1768
24.12.2.4 Register Settings 1770
24.12.2.5 Operating Procedure for TAUJnTTINm Input Interval Timer Function 1772
24.12.2.6 Specific Timing Diagrams 1773
24.12.3 TAUJnTTINm Input Pulse Interval Measurement Function 1774
24.12.3.1 Overview 1774
24.12.3.2 Equations 1775
24.12.3.3 Block Diagram and General Timing Diagram 1775
24.12.3.4 Register Settings 1777
24.12.3.5 Operating Procedure for TAUJnTTINm Input Pulse Interval Measurement Function 1778
24.12.3.6 Specific Timing Diagrams: Overflow Behavior 1779
24.12.4 TAUJnTTINm Input Signal Width Measurement Function 1783
24.12.4.1 Overview 1783
24.12.4.2 Equations 1784
24.12.4.3 Block Diagram and General Timing Diagram 1784
24.12.4.4 Register Settings 1786
24.12.4.5 Operating Procedure for TAUJnTTINm Input Signal Width Measurement Function 1787
24.12.4.6 Specific Timing Diagrams: Overflow Behavior 1788
24.12.5 TAUJnTTINm Input Position Detection Function 1792

24.12.5.1 Overview ... 1792
24.12.5.2 Equations ... 1792
24.12.5.3 Block Diagram and General Timing Diagram ... 1793
24.12.5.4 Register Settings ... 1794
24.12.5.5 Operating Procedure for TAUJnTTINm Input Position Detection Function ... 1795
24.12.5.6 Specific Timing Diagrams ... 1796
24.12.6 TAUJnTTINm Input Period Count Detection Function ... 1797
24.12.6.1 Overview ... 1797
24.12.6.2 Equations ... 1797
24.12.6.3 Block Diagram and General Timing Diagram ... 1798
24.12.6.4 Register Settings ... 1799
24.12.6.5 Operating Procedure for TAUJnTTINm Input Period Count Detection Function ... 1800
24.12.6.6 Specific Timing Diagrams ... 1801
24.13 Synchronous Channel Operation Functions ... 1802
24.13.1 PWM output function ... 1802
24.13.1.1 Overview ... 1802
24.13.1.2 Equations ... 1804
24.13.1.3 Block Diagram and General Timing Diagram ... 1804
24.13.1.4 Register Settings for the Master Channel ... 1806
24.13.1.5 Register Settings for the Slave Channel(s) ... 1808
24.13.1.6 Operating Procedure for PWM Output Function ... 1810
24.13.1.7 Specific Timing Diagrams ... 1811

Section 25 Motor Control Timer (TSG3) ... 1814
25.1 Features of RH850/P1x TSG3 ... 1814
25.1.1 Number of Units ... 1814
25.1.2 Register Base Address ... 1814
25.1.3 Clock Supply ... 1814
25.1.4 Interrupt Requests ... 1815
25.1.5 Reset Sources ... 1816
25.1.6 External Input/Output Signals ... 1816
25.2 Overview ... 1817
25.2.1 Functional Overview ... 1817
25.2.2 Block Diagram ... 1819
25.3 List of Registers ... 1820
25.3.1 List of Registers ... 1820
25.3.2 TSG3nCTL0 — TSG3n Control Register 0 ... 1823
25.3.3 TSG3nCTL1 — TSG3n Control Register 1 ... 1824
25.3.4 TSG3nCTL2 — TSG3n Control Register 2 ... 1826
25.3.5 TSG3nCTL3 — TSG3n Control Register 3 ... 1827
25.3.6 TSG3nCTL4 — TSG3n Control Register 4 ... 1828
25.3.7 TSG3nCTL5 — TSG3n Control Register5 ... 1830
25.3.8 TSG3nCTL6 — TSG3n Control Register 6 ... 1833
25.3.9 TSG3nCTL7 — TSG3n Control Register 7 ... 1836
25.3.10 TSG3nCTL8 — TSG3n Control Register 8 ... 1837
25.3.11 TSG3nIOC0 — TSG3n I/O Control Register0 ... 1838

25.3.12 TSG3nIOC1 — TSG3n I/O Control Register1 1839
25.3.13 TSG3nIOC2 — TSG3n I/O Control Register2 1840
25.3.14 TSG3nIOC3 — TSG3n I/O Control Register3 1841
25.3.15 TSG3nSTR0 — TSG3n Status Register 0 1842
25.3.16 TSG3nSTR1 — TSG3n Status Register 1 1843
25.3.17 TSG3nSTR2 — TSG3n Status Register 2 1844
25.3.18 TSG3nSTC — TSG3n Status Clear Trigger Register 1847
25.3.19 TSG3nOPT0 — TSG3n Option Register 0 1849
25.3.20 TSG3nOPT1 — TSG3n Option Register 1 1851
25.3.21 TSG3nTRG0 — TSG3n Trigger Register 0 1852
25.3.22 TSG3nTRG1 — TSG3n Trigger Register 1 1852
25.3.23 TSG3nTRG2 — TSG3n Trigger Register 2 1853
25.3.24 TSG3nCNT — TSG3n Counter Read Buffer Register 1853
25.3.25 TSG3nCNTE — TSG3n Bit-Extended Counter Read Buffer Register 1854
25.3.26 TSG3nSBC — TSG3n Sub-Counter Read Buffer Register 1855
25.3.27 TSG3nSBCE — TSG3n Bit Extended Sub-Counter Read Buffer Register 1855
25.3.28 TSG3nCMP0 — TSG3n Compare Register 0 1856
25.3.29 TSG3nCMP0E — TSG3n Bit Extended Compare Register 0 1856
25.3.30 TSG3nCMP1W — TSG3n Compare Register 1, 2 1857
25.3.31 TSG3nCMP3W — TSG3n Compare Register 3, 4 1857
25.3.32 TSG3nCMP5W — TSG3n Compare Register 5, 6 1858
25.3.33 TSG3nCMP7W — TSG3n Compare Registers 7, 8 1858
25.3.34 TSG3nCMP9W — TSG3n Compare Registers 9, 10 1859
25.3.35 TSG3nCMP11W — TSG3n Compare Registers 11, 12 1859
25.3.36 TSG3nCMP1 to TSG3nCMP12 — TSG3n Compare Registers 1 to 12 1860
25.3.37 TSG3nCMP1E to TSG3nCMP12E — TSG3n Bit Extended Compare Registers 1 to 12 1861
25.3.38 TSG3nDCMP0W — TSG3n Diagnostic Output Compare Register 0, 1 1863
25.3.39 TSG3nDCMP2 — TSG3n Diagnostic Output Compare Register 2 1863
25.3.40 TSG3nDCMP0E to 2E — TSG3n Bit Extended Diagnostic Output Compare Register 0 to 2 1864
25.3.41 TSG3nPAT0W — TSG3n Pattern Register 0 1865
25.3.42 TSG3nPAT1W — TSG3n Pattern Register 1 1866
25.3.43 TSG3nDTC0W — TSG3n Dead Time Setting Register 0 1867
25.3.44 TSG3nDTC1W — TSG3n Dead Time Setting Register 1 1867
25.3.45 TSG3nCMPU — TSG3n HT-PWM U Phase Compare Register 1868
25.3.46 TSG3nCMPV — TSG3n HT-PWM V Phase Compare Register 1868
25.3.47 TSG3nCMPW — TSG3n HT-PWM W Phase Compare Register 1868
25.3.48 TSG3nCMPUE — TSG3n Bit Extended U Phase Compare Register 1869
25.3.49 TSG3nCMPVE — TSG3n Bit Extended V Phase Compare Register 1870
25.3.50 TSG3nCMPWE — TSG3n Bit Extended W Phase Compare Register 1871
25.3.51 TSG3nUPW — TSG3n SP-PWM U Phase Active Width Register 1872
25.3.52 TSG3nVPW — TSG3n SP-PWM V Phase Active Width Register 1872
25.3.53 TSG3nWPW — TSG3n SP-PWM W Phase Active Width Register 1872
25.3.54 TSG3nUPWE — TSG3n Bit Extended U Phase Active Width Register 1873
25.3.55 TSG3nVPWE — TSG3n Bit Extended V Phase Active Width Register 1874
25.3.56 TSG3nWPWE — TSG3n Bit Extended W Phase Active Width Register 1875

25.3.57 TSG3nHSPCMUE — TSG3n HSP-PWM Mode U Phase Compare Register 1876
25.3.58 TSG3nHSPCMVE — TSG3n HSP-PWM Mode V Phase Compare Register 1876
25.3.59 TSG3nHSPCMWE — TSG3n HSP-PWM Mode W Phase Compare Register 1877
25.3.60 TSG3nHSPSHUE — TSG3n HSP-PWM Mode U Phase Shift Register 1877
25.3.61 TSG3nHSPSHVE — TSG3n HSP-PWM Mode V Phase Shift Mode Register 1878
25.3.62 TSG3nHSPSHWE — TSG3n HSP-PWM Mode W Phase Shift Register 1878
25.3.63 TSG3nDTPR — TSG3n Dead Time Protection Register 1879
25.4 Function 1880
25.4.1 Basic Operation 1880
25.4.1.1 Basic Operation of 18-Bit Counter 1880
25.4.1.2 Function of Compare Registers 1882
25.4.1.3 Compare Register Rewrite Operation 1884
25.4.1.4 List or Outputs in Each Mode 1892
25.4.1.5 Restart 1895
25.4.2 Match Interrupt 1896
25.4.3 Flags 1901
25.4.3.1 Up Count Flag (TSG3nCUF and TSG3nSUF) 1902
25.4.3.2 Positive Phase and Inverse Phase Simultaneous Active State Detection Flag (TSG3nTBF0 to TSG3nTBF2)1904
25.4.3.3 Reload Request Flag (TSG3nRSF) 1905
25.4.3.4 Noise Detection Flag (TSG3nNDF) 1906
25.4.3.5 Pattern Order Detection Flag (TSG3nTSF) 1907
25.4.3.6 Pattern Error Detection Flag (TSG3nPEF) 1909
25.4.3.7 Pattern Reversal Detection Flag (TSG3nPRF) 1910
25.4.3.8 TSG3nPTSI2 to TSG3nPTSI0 Pin Abnormal Toggle Detection Flag (TSG3nPTF) 1912
25.4.3.9 TSG3nOPCI0 and TSG3nOPCI1 Signal Simultaneous Trigger Detection Flag (TSG3nTDF) 1913
25.4.3.10 Pattern Phase Difference Detection Flag (TSG3nPPF) 1914
25.4.3.11 Timer Output Pattern Flag (TSG3nOPF2-TSG3nOPF0) 1915
25.4.3.12 Pattern Switch Detection Signal (TSG3nPTE) 1916
25.4.4 Interrupt Skipping Function 1918
25.4.4.1 Operation of Interrupt Skipping Function 1919
25.4.4.2 Example of Operation when Peak Interrupt is Generated (in PWM Mode) 1922
25.4.5 A/D Conversion Trigger Function 1923
25.4.5.1 Operation of A/D Conversion Trigger 1924
25.4.6 Error/Warning Interrupt 1929
25.4.6.1 Error Interrupt Function 1929
25.4.6.2 Warning Interrupt Function 1932
25.4.7 Operating Modes 1933
25.4.7.1 PWM Mode 1933
25.4.7.2 HT-PWM mode (High accuracy Triangular - Pulse Width Modulation mode) 1944
25.4.7.3 SP-PWM Mode (Shifted-pulse - Pulse Width Modulation Mode) 1966
25.4.7.4 120-DC Mode 1977
25.4.7.5 HSP-PWM Mode (High accuracy Shifted-pulse - Pulse Width Modulation Mode) 2011
25.4.7.6 Compare Register Set Value in HSP-PWM Mode 2019
25.4.7.7 Timer Output Operation in HSP-PWM Mode 2020
25.4.7.8 Software Output Control Function 2031

Section 26 Timer Option (TAPA) 2032
26.1 Features of RH850/P1x TAPA 2032
26.1.1 Units 2032
26.1.2 Register Base Address 2032
26.1.3 Clock Supply 2032
26.1.4 Interrupt Request 2033
26.1.5 Reset Resources 2033
26.1.6 Internal Signal 2033
26.1.7 Peripheral Configuration 2034
26.2 Overview 2035
26.2.1 Functional Overview 2035
26.2.2 Block Diagram 2035
26.3 Registers 2035
26.3.1 List of Registers 2035
26.3.2 TAPAnCTL0 — TAPAn Control Register 0 2036
26.3.3 TAPAnFLG — TAPAn Flag Register 2037
26.3.4 TAPAnACWE — TAPAn Asynchronous Control Write Enable Register 2038
26.3.5 TAPAnACTS — TAPAn Asynchronous Control Start Trigger Register 2039
26.3.6 TAPAnACTT — TAPAn Asynchronous Control Stop Trigger Register 2039
26.3.7 TAPAnOPHS — TAPAn Hi-Z Start Trigger Register 2040
26.3.8 TAPAnOPHT — TAPAn Hi-Z Stop Trigger Register 2040
26.4 Function 2041
26.4.1 Asynchronous Hi-Z Control Function 2041
26.4.1.1 Overview 2041
26.4.1.2 Example of System Configuration 2041
26.4.1.3 Basic Operation 2043
26.4.1.4 Software Operations for Asynchronous Hi-Z Control 2045
26.4.1.5 Operating Procedure 2046

Section 27 Timer Pattern Buffer (TPBA) 2047
27.1 Features of RH850/P1x TPBA 2047
27.1.1 Units and Channels 2047
27.1.2 Register Base Address 2047
27.1.3 Clock Supply 2047
27.1.4 Interrupt Request 2048
27.1.5 Reset Sources 2048
27.1.6 External Input/Output Signals 2048
27.2 Overview 2049
27.2.1 Functional Overview 2049
27.2.2 Block Diagram 2050
27.3 Registers 2051
27.3.1 TPBAn Registers Overview 2051
27.3.2 TPBAnCTL — TPBAn Control Register 2052
27.3.3 TPBAnRDM — TPBAn Reload Data Mode Register 2053
27.3.4 TPBAnRSF — TPBAn Reload Status Register 2054

27.3.5 TPBAnRDT — TPBAn Reload Data Trigger Register 2055
27.3.6 TPBAnTOE — TPBAn Timer Output Enable Register 2055
27.3.7 TPBAnTO — TPBAn Timer Output Register 2056
27.3.8 TPBAnTOL — TPBAn Timer Output Level Register 2057
27.3.9 TPBAnCMP0 — TPBAn Period Setting Register 2058
27.3.10 TPBAnBUFm — TPBAn Duty Setting Register 2059
27.3.11 TPBAnCMP1 — TPBAn Pattern Number Setting Register 2060
27.3.12 TPBAnCNT0 — TPBAn Timer Counter Register 2061
27.3.13 TPBAnCNT1 — TPBAn Address Counter Register 2061
27.3.14 TPBAnTE — TPBAn Enable Status Register 2062
27.3.15 TPBAnTS — TPBAn Start Trigger Register 2062
27.3.16 TPBAnTT — TPBAn Stop Trigger Register 2063
27.4 Function 2064
27.4.1 Basic Operation 2064
27.4.1.1 Basic Operation of 16-Bit Counter (TPBAnCNT0) 2064
27.4.1.2 Basic Operation of 7-Bit Counter (TPBAnCNT1) 2064
27.4.2 Compare Register Rewrite Operation 2065
27.4.3 Duty Rewrite Operation 2068
27.4.3.1 TPBAnBUFm Setting Flow 2068
27.4.3.2 Access to TPBAnBUFm 2069
27.4.3.3 Relationship between TPBAnCNT1 Read Value and TPBAnBUFm 2070
27.4.4 Basic Operation Example 2071
27.4.4.1 List of Operations 2072

Section 28 Encoder Timer (ENCA) 2076
28.1 Features of RH850/P1x ENCA 2076
28.1.1 Units and Channels 2076
28.1.2 Register Base Address 2076
28.1.3 Clock Supply 2077
28.1.4 Interrupt Requests 2077
28.1.5 Reset Sources 2077
28.1.6 External Input/Output Signals 2078
28.2 Overview 2079
28.2.1 Functional Overview 2079
28.2.2 Block Diagram 2080
28.3 Registers 2081
28.3.1 List of Registers 2081
28.3.2 ENCAnCTL — ENCA Control Register 2082
28.3.3 ENCAnIOC0 — ENCA I/O Control Register 0 2084
28.3.4 ENCAnIOC1 — ENCA I/O Control Register 1 2085
28.3.5 ENCAnFLG — ENCA Status Flag Register 2086
28.3.6 ENCAnFGC — ENCA Status Flag Clear Register 2087
28.3.7 ENCAnCCR0 — ENCA Capture Compare Register 0 2088
28.3.8 ENCAnCCR1 – ENCA Capture Compare Register 1 2089
28.3.9 ENCAnCNT — ENCA Counter Register 2090
28.3.10 ENCAnTE — ENCA Timer Enable Status Register 2091

28.3.11 ENCAnTS — ENCA Timer Start Trigger Register 2092
28.3.12 ENCAnTT — ENCA Timer Stop Trigger Register 2093
28.4 Operation 2094
28.4.1 Timer Counter Operation 2094
28.4.2 Up/Down Control of Timer Counter 2096
28.4.2.1 When ENCAnUDS[1:0] Bits in ENCAnCTL = 00_B 2096
28.4.2.2 When ENCAnUDS[1:0] Bits in ENCAnCTL = 01_B 2097
28.4.2.3 When ENCAnUDS[1:0] Bits in ENCAnCTL = 10_B 2098
28.4.2.4 When ENCAnUDS[1:0] Bits in ENCAnCTL = 11_B 2099
28.4.3 Timer Counter Clear Control by Encoder Input 2100
28.4.3.1 Clearing Method when ENCAnSCE = 0 2100
28.4.3.2 Clearing Method when ENCAnSCE = 1 2101
28.4.4 Functions of ENCAnCCR0 2102
28.4.4.1 Compare Function 2102
28.4.4.2 Capture Function 2102
28.4.5 Functions of ENCAnCCR1 2103
28.4.5.1 Compare Function 2103
28.4.5.2 Capture Function 2105
28.4.5.3 Timer Counter Clearing upon Compare Register Match 2106
28.4.6 Startup/Stop of Timer Counter 2107
28.4.6.1 Startup of Timer 2107
28.4.6.2 Stop of Timer 2107
28.5 ENCA Setting Sequences 2108
28.5.1 Encoder timer setting procedure 2108
28.5.1.1 Initial Setting Procedure for Counter 2108
28.5.1.2 Initial Setting Procedure for Counter Clear 2109
28.5.1.3 Setting Procedure for ENCAnCCR0 Register 2109
28.5.1.4 Setting Procedure for ENCAnCCR1 Register 2110
28.6 Timing Chart 2111
28.6.1 Overflow Occurrence and Overflow Flag Clear Operation 2111
28.6.2 Underflow Occurrence and Underflow Flag Clear Operation 2112
28.6.3 Count Clear and Capture Operation by Encoder Clear Input (ENCAnEC pin) 2113
28.6.4 Conflict between Overflow Occurrence and Clear Operation by Encoder Clear Input (ENCAnEC Pin) 2114
28.6.5 Conflict between Underflow Occurrence and Clear Operation by Encoder Clear Input (ENCAnEC Pin) 2115
28.6.6 Overflow Operation Immediately after Startup 2116
28.6.7 Underflow Operation Immediately after Startup 2117
28.6.8 Using the ENCAnLDE Function Immediately after Startup 2118
28.6.9 ENCAnLDE Function (Loading Count Value) 2119
28.6.10 Conflict between ENCAnLDE Function (Loading Counter Value) and Rewrite of ENCAnCCR0 Register 2121
28.6.11 Conflict between ENCAnLDE Function (Loading Counter Value) and Clear Operation by Encoder Clear Input 2122
28.6.12 Up-count after Conflict between ENCAnLDE Function (Loading Counter Value) and Clear Operation by Encoder Clear Input 2124
28.6.13 Capture Operation between Count Clocks (ENCAnCCR1) 2125
28.6.14 Capture Operation between Count Clocks (ENCAnCCR0) 2126

28.6.15 Encoder operation when compare match clear control is enabled and ENCAnCTS = 0 2127
28.6.16 Encoder operation when compare match clear control is enabled and ENCAnCTS = 1 2128
28.6.17 Encoder operation when compare match clear control is disabled 2129
28.6.18 Capture Operation Performed upon Clearing by ENCAnEC, ENCAnE0, and ENCAnE1 when ENCAnSCE = 1 2130
28.6.18.1 Accompanying Capture Operation 2130
28.6.18.2 When the Timing of the ENCAnEC Input is Later than that of the ENCAnE1 Input during Up-count 2131
28.6.18.3 When the Timing of the ENCAnEC Input is the Same as that of the ENCAnE1 Input during Up-count 2132
28.6.18.4 When the Timing of the ENCAnEC Input is Earlier than that of the ENCAnE1 Input during Up-count 2132
28.6.18.5 When the Timing of the ENCAnEC Input is Later than that of the ENCAnE1 Input during Down-count 2133
28.6.19 Capture Operation Performed upon Clearing by ENCAnEC when ENCAnSCE = 0 2134

Section 29 Peripheral Interconnection (PIC) 2135

29.1 Features of RH850/P1x PIC 2135
29.1.1 Number of Units 2135
29.1.2 Register Base Address 2135
29.1.3 Clock Supply 2135
29.1.4 Reset Sources 2136
29.1.5 Input/Output Signals 2136
29.1.6 External Input/Output Signals 2138
29.2 Peripheral Interconnection — 1 (PIC1A) 2140
29.2.1 Overview 2140
29.2.1.1 Functional Overview 2140
29.2.2 Registers 2141
29.2.2.1 List of Registers 2141
29.2.2.2 PIC1ASST — Simultaneous Start Trigger Control Register 2143
29.2.2.3 PIC1ASSER0 — Simultaneous Start Control Register 0 2144
29.2.2.4 PIC1ASSER1 — Simultaneous Start Control Register 1 2144
29.2.2.5 PIC1ASSER2 — Simultaneous Start Control Register 2 2145
29.2.2.6 PIC1ASSER3 — Simultaneous Start Control Register 3 2147
29.2.2.7 PIC1AINIn0 — Flip-Flop Circuit Initialization Register n0 2147
29.2.2.8 PIC1AINIn1 — DT Initialization Register n1 2148
29.2.2.9 PIC1ATSGHALLSEL — Hall Sensor Input Select Register 2149
29.2.2.10 PIC1ATAUD0SEL — TAUD0 Input Select Register 2150
29.2.2.11 PIC1ATAUD1SEL — TAUD1 Input Select Register 2151
29.2.2.12 PIC1AHIZCEN0 — Hi-Z Control Register 0 2152
29.2.2.13 PIC1AHIZCEN1 — Hi-Z Control Register 1 2153
29.2.2.14 PIC1AHIZCEN2 — Hi-Z Control Register 2 2154
29.2.2.15 PIC1AHIZCEN3 — Hi-Z Control Register 3 2155
29.2.2.16 PIC1AENCSEL400 — ENCATIN1 Input Select Register 400 2156
29.2.2.17 PIC1AENCSEL410 — ENCATIN1 Input Select Register 410 2157
29.2.2.18 PIC1AREG200 — Timer Input/Output Control Register 200 2158
29.2.2.19 PIC1AREG210 — Timer Input/Output Control Register 210 2159

29.2.2.20 PIC1AREG2n1 — Timer Input/Output Control Register 2n1 2160
29.2.2.21 PIC1AREG2n2 — Timer Input/Output Control Register 2n2 2162
29.2.2.22 PIC1AREG2n3 — Timer Input/Output Control Register 2n3 2163
29.2.2.23 PIC1AREG30 — Timer Input/Output Control Register 30 2165
29.2.2.24 PIC1AREG31 — Timer Input/Output Control Register 31 2167
29.2.2.25 PIC1AREG50 — Timer Input/Output Control Register 50 2169
29.2.2.26 PIC1AREG51 — Timer Input/Output Control Register 51 2170
29.2.2.27 POMONSEL — Port Output Monitor Select Register 2171
29.2.2.28 PIMONSEL — Port Input Monitor Select Register 2172
29.2.2.29 SELBSSER — Synchronous Clear Enable Register 2173
29.2.3 Function 2174
29.2.3.1 Simultaneous Start Trigger Function 2174
29.2.3.2 PWM Output Function with Dead Time 2178
29.2.3.3 High Accuracy Triangle Wave PWM Output Function with Dead Time 2187
29.2.3.4 Delay Pulse Output Function with Dead Time 2200
29.2.3.5 Trigger Pulse Width Measurement Function 2206
29.2.3.6 Encoder Capture Trigger Select Function 2214
29.2.3.7 Two-Phase Encoder Control Function (Control Method 1) 2221
29.2.3.8 Two-Phase Encoder Control Function (Control Method 2) 2227
29.2.3.9 Three-Phase Pulse Input Control Function 2233
29.2.3.10 Three-Phase Encoder Function 2242
29.2.3.11 TAUD Input Select Function 2246
29.2.3.12 Hi-Z Control Function 2248
29.2.3.13 Timer Output Monitor Function (PWM-Diag) 2251
29.2.3.14 Timer Input Monitor Function 2252
29.2.3.15 TSG3 Synchronous Clear Function 2253
29.3 Peripheral Interconnection — 2 (PIC2B) 2254
29.3.1 Overview 2254
29.3.1.1 Functional Overview 2254
29.3.2 Registers 2254
29.3.2.1 List of Registers 2254
29.3.2.2 PIC2BADCDnTSELx — A/D Converter n Trigger Select Control Register x 2255
29.3.2.3 PIC2BADCDnEDGSEL — A/D Converter Trigger Edge Control Register 2257
29.3.2.4 PIC2BADTEN4nx — A/D Converter Trigger Output Select Control Register 2258
29.3.2.5 ADSYNCTRG — A/D Converter Synchronized Start Trigger Register 2258
29.3.3 Function 2259
29.3.3.1 ADCD Trigger Select Function 2259

Section 30 A/D Converter (ADCD) 2262

30.1 Features of RH850/P1x ADCD 2262
30.1.1 Number of Units 2262
30.1.2 Register Base Address 2262
30.1.3 Clock Supply 2263
30.1.4 Interrupts and DMA 2263
30.1.5 Reset Resources 2263
30.1.6 External Input/Output Signals 2264
30.1.7 Analog Channels, and Track and Hold Function 2265
30.1.8 Virtual Channel 2265

30.2 Overview ... 2266
30.2.1 Functional Overview ... 2266
30.2.2 Block Diagram ... 2268
30.2.3 Scan Group (SG) ... 2270
30.3 Registers ... 2271
30.3.1 List of Registers ... 2271
30.3.2 ADCD0ADSYNSTCR — AD Synchronization Start Control Register ... 2273
30.3.3 ADCD0ADTSYNSTCR — AD Timer Synchronization Start Control Register ... 2273
30.3.4 ADCDnVCRj — Virtual Channel Register j ... 2274
30.3.5 ADCDnDRj — Data Register j ... 2276
30.3.6 ADCDnDIRj —Data Supplementary Information Register j ... 2278
30.3.7 ADCDnSMPCR — A/D Conversion Time Control Register ... 2280
30.3.8 ADCDnADHALTR — AD Halt Register ... 2281
30.3.9 ADCDnADCR1 — AD Control Register 1 ... 2282
30.3.10 ADCDnMPXCURCR — MPX Current Control Register ... 2283
30.3.11 ADCDnMPXCURR — MPX Current Register ... 2284
30.3.12 ADCDnMPXOWR — MPX Optional Wait Register ... 2285
30.3.13 ADCDnADCR2 — AD Control Register 2 ... 2286
30.3.14 ADCDnADENDPz — A/D Conversion Monitor Virtual Channel Pointer z ... 2287
30.3.15 ADCDnTHSMPSTCR — T&H Sampling Start Control Register ... 2288
30.3.16 ADCDnTHSTPCR — T&H Stop Control Register ... 2289
30.3.17 ADCDnTHCR — T&H Control Register ... 2290
30.3.18 ADCDnTHAHLDSTCR — T&H Group A Hold Start Control Register ... 2291
30.3.19 ADCDnTHBHLDSTCR — T&H Group B Hold Start Control Register ... 2292
30.3.20 ADCDnTHACR — T&H Group A Control Register ... 2293
30.3.21 ADCDnTHBCR — T&H Group B Control Register ... 2295
30.3.22 ADCDnTHER — T&H Enable Register ... 2297
30.3.23 ADCDnTHGSR — T&H Group Select Register ... 2298
30.3.24 ADCDnSFTCR — Safety Control Register ... 2299
30.3.25 ADCDnTDCR —Pin Level Self-Diagnostic Control Register ... 2300
30.3.26 ADCDnODCR — Wiring Break Detection Control Register ... 2301
30.3.27 ADOPDIGn — Wiring-break Detection Pin Setting Register n (n = 0, 1) ... 2303
30.3.28 ADCDnULLMTBR0 to 2 — Upper-limit/Lower-limit Table Registers 0 to 2 ... 2304
30.3.29 ADCDnECR — Error Clear Register ... 2305
30.3.30 ADCDnULER — Upper-limit/Lower-limit Error Register ... 2306
30.3.31 ADCDnOWER — Overwrite Error Register ... 2307
30.3.32 ADCDnPER — Parity Error Register ... 2308
30.3.33 ADCDnIDER — ID Error Register ... 2309
30.3.34 ADCDnSGSTCRx — Scan Group x Start Control Register ... 2310
30.3.35 ADCDnADTSTCRy — AD Timer y Start Control Register ... 2311
30.3.36 ADCDnADTENDCRy — AD Timer y End Control Register ... 2312
30.3.37 ADCDnSGCRx — Scan Group x Control Register ... 2313
30.3.38 ADCDnSGVCSPx — Scan Group x Start Virtual Channel Pointer ... 2315
30.3.39 ADCDnSGVCEPx — Scan Group x End Virtual Channel Pointer ... 2316
30.3.40 ADCDnSGMCYCRx — Scan Group x Multicycle Register ... 2317
30.3.41 ADCDnSGSRx — Scan Group x Status Register ... 2318

30.3.42 ADCDnADTIPRy — AD Timer Initial Phase Register y 2319
30.3.43 ADCDnADTPRRy — AD Timer Period Register y 2320
30.3.44 ADCDnULLMSRx — Scan Group x Upper-limit/Lower-limit Table Select Register 2321
30.4 Function 2322
30.4.1 A/D Conversion Function 2322
30.4.1.1 Example of Multicycle Scan Mode Operation 2322
30.4.1.2 Example of Continuous Scan Mode Operation 2323
30.4.1.3 Simultaneous Track and Hold Operation (THC Control) 2324
30.4.1.4 Example of Normal A/D Conversion Operation in Addition Mode 2328
30.4.1.5 Example of Using an External Analog Multiplexer (Port Output) 2329
30.4.2 Trigger Function 2330
30.4.2.1 Starting a Scan Group by Using a Hardware Trigger 2330
30.4.2.2 Starting a Scan Group by Using an A/D Timer Trigger 2330
30.4.2.3 Starting A/D Timer by Using a Hardware Trigger 2331
30.4.3 Suspend Function 2332
30.4.3.1 Synchronous Suspend and Resume Operation 2332
30.4.3.2 Example of Asynchronous Suspend and Resume Operation 2333
30.4.3.3 Example of Mixed (Synchronous/Asynchronous) Suspend Operation 2333
30.4.4 Self-Diagnostic Function 2334
30.4.4.1 Pin Level Self-Diagnostic Function 2334
30.4.4.2 A/D Conversion Circuit Self-Diagnostic Function 2336
30.4.4.3 Wiring-Break Detection 2337
30.4.4.4 Diagnosis of Wiring-Break Detection 2338
30.4.4.5 Pin-Level Self-Diagnosis of T&H Paths 2339
30.4.5 Interrupt Request Function 2345
30.4.5.1 Scan End Interrupt Request 2345
30.4.5.2 A/D Error Interrupt Request and A/D Parity Error Interrupt Request 2346
30.5 Operation 2347
30.5.1 Initial Settings 2347
30.5.2 Procedure for Starting A/D Conversion 2348
30.5.3 Procedure for Stopping A/D Conversion 2349
30.6 Definition of A/D Conversion Accuracy 2350

Section 31 Functional Safety 2351

31.1 Overview 2351
31.2 ECC and EDC 2352
31.2.1 Overview 2352
31.2.1.1 ECC 2352
31.2.1.2 Address Parity 2353
31.2.1.3 Data Parity 2353
31.2.2 Code Flash ECC and Address Parity 2354
31.2.2.1 Overview 2354
31.2.2.2 List of Registers 2355
31.2.2.3 Details of Registers 2356
31.2.3 Data Flash ECC 2365
31.2.3.1 Overview 2365
31.2.3.2 List of Registers 2366

31.2.3.3 Details of Registers 2367
31.2.3.4 Test Functions 2375
31.2.4 Local RAM (CPU1) ECC 2376
31.2.4.1 Overview 2376
31.2.4.2 List of Registers 2377
31.2.4.3 Details of Registers 2378
31.2.4.4 Test Function 2386
31.2.5 Instruction Cache ECC and EDC 2388
31.2.5.1 Overview 2388
31.2.5.2 List of Registers 2389
31.2.5.3 Details of Registers 2390
31.2.5.4 Test Function 2402
31.2.6 DTS RAM ECC 2403
31.2.6.1 Test Function 2403
31.2.7 ECC for Peripheral RAM (32 Bits) 2404
31.2.7.1 Overview 2404
31.2.7.2 List of Registers 2405
31.2.7.3 Details of Registers 2407
31.2.7.4 Notification to ECM 2417
31.2.7.5 Test Function 2418
31.2.8 Data Parity for Data Transfer Paths 2419
31.2.8.1 List of Registers 2419
31.2.8.2 Details of Registers 2421
31.2.9 Usage Notes 2424
31.3 Lockstep 2425
31.3.1 List of Registers 2425
31.3.2 Details of Registers 2426
31.3.2.1 TESTCOMPREG0 — Comparator Test Register 0 2426
31.3.2.2 TESTCOMPREG1 — Comparator Test Register 1 2427
31.3.2.3 PDMA_COMP_CNTRL — DMA Control Register 2428
31.3.3 Usage Notes 2428
31.4 Memory Protection 2429
31.4.1 Overview 2429
31.4.1.1 Identifiers for Slave Guard 2430
31.4.2 PBG 2431
31.4.2.1 List of Registers 2435
31.4.2.2 Details of Registers 2436
31.5 Clock Monitors 2440
31.5.1 Overview 2440
31.5.2 List of Registers 2441
31.5.2.1 Clock Monitor Channel Registers 2441
31.5.2.2 Shared Registers 2441
31.5.3 Details of Registers 2442
31.5.3.1 CLMAnCTL0 — CLMAn Control Register 0 2442
31.5.3.2 CLMAnCMPL —CLMAn Compare Register L 2442
31.5.3.3 CLMAnCMPH — CLMAn Compare Register H 2443
31.5.3.4 CLMATEST — CLMA Self-test Register 2444
31.5.3.5 CLMATESTS — CLMA Self-test Status Register 2445

31.5.4 Detection of Abnormal Clock Frequency 2446
31.5.5 Self-Diagnosis 2448
31.5.6 Notes on Register Setting 2448
31.5.6.1 Setting CLMAnCMPL/CLMAnCMPH Registers 2448
31.6 BIST 2449
31.6.1 List of BIST Registers 2449
31.6.2 Details of Registers 2450
31.6.2.1 BSEQ0CTL — Field BIST Control Register 2450
31.6.2.2 LBISTREF1 — Logic BIST signature register 1 2451
31.6.2.3 LBISTREF2 — Logic BIST Signature Register 2 2452
31.6.2.4 MBISTREF — Memory BIST Signature Register 2453
31.6.2.5 LBISTSIG1 — Logic BIST Signature Result Register 1 2454
31.6.2.6 LBISTSIG2 — Logic BIST Signature Result Register 2 2455
31.6.2.7 MBISTSIG — Memory BIST Signature Result Register 2456
31.6.2.8 BSEQ0ST — BIST Error Status Register 2457
31.6.2.9 BSEQ0STB — BIST Error Status Inversion Register 2458
31.6.3 Confirming Completion of BIST with no Abnormalities Detected 2459
31.6.4 State Transition of Field BIST 2460
31.6.5 Note 2460
31.7 ECM 2460

Section 32 Error Control Module (ECM) 2461

32.1 Overview 2461
32.1.1 Specification Overview 2461
32.1.2 Reset Sources 2462
32.1.3 Error Sources 2462
32.1.4 Operations for ERROROUT Output 2466
32.1.4.1 Dynamic Mode Enable 2466
32.1.4.2 Dynamic Mode Disable 2466
32.1.5 Loop-Back Function 2466
32.1.6 Pseudo Error Generation 2467
32.1.7 Error Status 2467
32.1.8 Timeout Function for Interrupt Processing 2467
32.2 Block Diagram 2468
32.3 Register Specification 2469
32.3.1 List of Registers 2469
32.3.2 ECMmESET — ECM Master/Checker Error Set Trigger Register (m = M/C) 2471
32.3.3 ECMmECLR — ECM Master/Checker Error Clear Trigger Register (m = M/C) 2472
32.3.4 ECMmESSTR0 — ECM Master/Checker Error Source Status Register 0 (m = M/C) 2473
32.3.5 ECMmESSTR1 — ECM Master/Checker Error Source Status Register 1(m = M/C) 2474
32.3.6 ECMEPCFG — ECM Error Pulse Configuration Register 2475
32.3.7 ECMMICFG0 — ECM EI Level Interrupt Configuration Register 0 2476
32.3.8 ECMMICFG1 — ECM EI Level Interrupt Configuration Register 1 2477
32.3.9 ECMNMICFG0 — ECM FE Level Interrupt Configuration Register 0 2478
32.3.10 ECMNMICFG1 — ECM FE Level Interrupt Configuration Register 1 2479
32.3.11 ECMIRCFG0 — ECM Internal Reset Configuration Register 0 2480

32.3.12 ECMIRCFG1 — ECM Internal Reset Configuration Register 1 2481
32.3.13 ECMEMK0 — ECM Error Mask Register 0 2482
32.3.14 ECMEMK1 — ECM Error Mask Register 1 2483
32.3.15 ECMESSTC0 — ECM Error Source Status Clear Trigger Register 0 2484
32.3.16 ECMESSTC1 — ECM Error Source Status Clear Trigger Register 1 2485
32.3.17 ECMPE0 — ECM Pseudo Error Trigger Register 0 2486
32.3.18 ECMPE1 — ECM Pseudo Error Trigger Register 1 2487
32.3.19 ECMDTMCTL — ECM Delay Timer Control Register 2488
32.3.20 ECMDTMR — ECM Delay Timer Register 2488
32.3.21 ECMDTMCMP — ECM Delay Timer Compare Register 2489
32.3.22 ECMDTMCFG0 — ECM Delay Timer Configuration Register 0 2490
32.3.23 ECMDTMCFG1 — ECM Delay Timer Configuration Register 1 2491
32.3.24 ECMDTMCFG2 — ECM Delay Timer Configuration Register 2 2492
32.3.25 ECMDTMCFG3 — ECM Delay Timer Configuration Register 3 2493
32.3.26 ECMEPCTL — ECM Error Pulse Control Register 2494

Section 33 Data CRC (DCRA) 2495

33.1 Features of RH850/P1x DCRA 2495
33.1.1 Number of Units 2495
33.1.2 Register Base Address 2495
33.1.3 Clock Supply 2496
33.1.4 Reset Sources 2496
33.2 Overview 2497
33.2.1 Functional Overview 2497
33.2.2 Block Diagram 2497
33.2.3 Operation Circuit 2498
33.3 Registers 2500
33.3.1 List of Registers 2500
33.3.2 DCRAnCIN — CRC Input Register 2501
33.3.3 DCRAnCOUT — CRC Data Register 2502
33.3.4 DCRAnCTL — CRC Control Register 2503
33.4 Operation 2504

Section 34 On-Chip Debugging Unit (OCD) 2505

34.1 Debug Function 2505
34.2 Calibration Function 2507
34.3 Trace Control Function 2507
34.4 Peripheral Break Control 2507
34.5 AUD-RAM Monitor (AUDR) 2508
34.5.1 Overview 2508
34.5.2 I/O Pins 2510
34.5.3 Description of Registers 2511
34.5.3.1 AUDMBR/AUDMBRC — AUDR Message Board Register 2512
34.5.4 RAM Monitor Function 2513
34.5.4.1 Communication Protocol 2513

34.5.4.2 Description of Operation 2513
34.5.4.3 Usage Noted for the RAM Monitor Function 2521
34.5.4.4 Enabling and Disabling the RAM Monitor Function 2521
34.6 Usage Notes for On-chip Debugging 2521

Section 35 Flash Memory 2522

35.1 Features 2522
35.2 Structure of Memory 2523
35.3 Operating Modes Associated with Flash Memory 2526
35.4 Functional Overview 2527
35.5 Serial Programming 2532
35.5.1 Environments for Programming 2532
35.6 Communications Mode 2533
35.6.1 One-wire UART as an Asynchronous Flash Programming Interface 2533
35.6.2 Two-wire UART as an Asynchronous Flash Programming Interface 2533
35.6.3 CSI as a Synchronous Flash Programming Interface 2533
35.6.4 Selecting the Communications System 2534
35.7 Self-Programming 2535
35.7.1 Overview 2535
35.7.2 Background Operation 2535
35.7.3 Enabling of Self-Programming 2536
35.7.3.1 FLMDCNT Register 2536
35.8 Flash Memory Read 2537
35.8.1 Code Flash Memory Read 2537
35.8.2 Data Flash Memory Read 2537
35.9 Description of Registers 2538
35.9.1 Registers Related to Data Flash Memory 2538
35.9.1.1 EEPRDCYCL — Data Flash Memory Read Cycle Setting Register 2538
35.9.2 Registers Related to Write and Erase Protect of Flash Memory 2539
35.9.2.1 FHVE15 — FHVE15 Control Register 2539
35.9.2.2 FHVE3 — FHVE3 Control Register 2540
35.9.3 Registers Related to Product Information 2541
35.9.3.1 PRDNAMEn — Product Name Storage Register (n = 1 to 4) 2542
35.10 Option Bytes 2543
35.10.1 Option Byte Setting 2543
35.10.1.1 Setting of Option Byte 0 2544
35.10.1.2 Setting of Option Byte 2 2545
35.10.2 OPBT0 — Option Byte 0 2546
35.10.3 OPBT2 — Option Byte 2 2548
35.11 ECC Test Area 2549
35.12 Usage Notes 2550

Section 36 RAM 2551

36.1 List of On-Chip RAMs 2551

36.2 Features ... 2551
36.3 Backup Register ... 2552
36.3.1 List of Registers ... 2552
36.3.2 BRAMDATn — Backup Register ... 2552
36.4 Emulation RAM ... 2553
36.4.1 Emulation RAM ... 2553
36.4.2 Code Flash Emulation Function Using the Emulation RAM ... 2553
36.4.3 Memory Map of Emulation RAM ... 2554
36.4.4 List of CFU Registers ... 2555
36.4.5 TM_ME — Tuning Memory Mapping Enable Register ... 2556
36.4.6 TM_MS — Tuning Memory Mapping Status Register ... 2557
36.4.7 TM_BMC0 — Tuning Memory Bank Mapping Size Configuration Registers 0 ... 2558
36.4.8 TM_MA0 to 3 — Tuning Memory Mapping Address Registers 0 to 3 ... 2559
36.4.9 Flow of Processing for Tuning ... 2560
36.4.10 Notes on Access to ERAM ... 2560
36.5 Usage Notes ... 2560

Section 37 Electrical Specifications ... 2561

37.1 Overview ... 2561
37.1.1 General Measurement Conditions ... 2561
37.1.1.1 Common Conditions ... 2561
37.1.1.2 AC Characteristic Measurement Condition ... 2562
37.2 Absolute Maximum Ratings ... 2563
37.3 Supply Voltage Characteristics ... 2564
37.4 Oscillator Characteristics ... 2564
37.5 Characteristics of High-Speed Internal Oscillator Circuit ... 2565
37.6 PLL Characteristics ... 2565
37.7 Regulator Characteristics ... 2565
37.8 DC Characteristics ... 2566
37.8.1 Relationship between Power Name and Pin ... 2566
37.8.2 Buffer Characteristics ... 2567
37.8.3 Allowed Output Current ... 2568
37.8.4 Injection Current ... 2568
37.8.5 Input Capacitance ... 2568
37.8.6 Power Current Characteristics ... 2569
37.9 AC Characteristics ... 2570
37.9.1 Power UP/Down Timing ... 2570
37.9.2 Driving Ability ... 2572
37.9.3 Clock Timing ... 2572
37.9.4 Control Signal Timing ... 2573
37.9.4.1 Reset ... 2573
37.9.4.2 Interrupts/ADTRG ... 2574
37.9.4.3 Mode ... 2575
37.9.5 Timer Timing ... 2575

37.9.6 CSI Timing 2576
37.9.6.1 CSIG Timing 2576
37.9.6.2 CSIH Timing 2577
37.9.6.3 CSIG/CSIH Timing Charts 2578
37.9.7 SCI3 Timing 2587
37.9.8 RS-CAN Timing 2589
37.9.9 RLIN3 Timing 2589
37.9.10 FlexRay Timing 2589
37.9.11 PSI5 Timing 2590
37.9.12 RSENT Timing 2590
37.10 POC Characteristics 2591
37.11 LVI Characteristics 2592
37.12 Core Voltage Monitor Characteristics 2592
37.13 Temperature Sensor 2592
37.14 BIST Execution Time 2593
37.15 A/D Convertor Characteristics 2593
37.16 Code Flash Characteristics 2595
37.17 Data Flash Characteristics 2596
37.18 Debug Interface 2597
37.18.1 JTAG/NEXUS Timing 2597
37.18.2 LDU 4-Wire Timing 2598
37.18.3 AUD RAM Monitoring 2599
37.19 Thermal Characteristics 2600

Appendix A. List of Registers 2601

Appendix B. Package Dimensions 2725

Section 1 Overview

RH850/P1x is a product of the single-chip microcomputer RH850 Series of Renesas Electronics. This section describes overview of the RH850/P1x.

1.1 Outline

This product is a 32-bit single-chip microcomputer that is best suited for high-precision motor control through high-speed computation by incorporating multiple RH850G3M CPUs of the RH850 Series, ROM, RAM, DMA controller, timers including the PMW timer, serial interfaces including CAN, and peripheral functions such as A/D converters.

(1) Installing multiple RH850 cores

This product contains two RH850G3Ms: one operates as the master CPU for normal operation and another as a checker CPU that monitors the operation of the master CPU. The two CPUs operate in lock step mode.

The RH850G3M supports RISC-type instruction sets and have significantly improved the instruction execution speed with basic instructions (one clock cycle per instruction) and the optimized 7-stage pipeline configurations. Furthermore, this product also supports multiplication instructions using a 32-bit hardware multiplier, saturated product-sum operation instructions, and bit manipulation instructions as instructions best suited for various fields such as digital servo control applications.

Two-byte basic instructions and high-level language instructions improve object code efficiency for the C compiler and reduce the program size. Furthermore, this product is suited for advanced real-time control fields thanks to high-speed interrupt response time including the processing time of the on-chip interrupt controller.

(2) On-chip flash memory and data flash

This product incorporates flash memory allowing high-speed accesses, which enables each CPU to access this flash memory. This memory can be reprogrammed while it is placed on an application system. This can shorten the system development period and significantly improve the serviceability after the system is delivered.

This product also has data flash memory that is available for storing EEPROM data.

(3) Rich peripheral functions

The RH850/P1x incorporates standard communication controllers such as CAN, LIN, FlexRay, and serial communications in addition to timers and A/D converters best suited for the automobile chassis applications. In addition, the RH850/P1x incorporates SENT and PSI5 communication controllers that can be used for sensor interface.

(4) Conforming to functional safety

The memory protection function, peripheral device protection function, and system/register protection function are provided to ensure highly reliable operations of the CPU. With these function, the RH850/P1x conforms to the functional safety requirements (ASIL) in the automotive field.

1.2 Application Fields

- Automotive field (including chassis control system)

1.3 Specification Overview

The table below overviews the specifications for this product.

(1/2)

Product			RH850/P1M		
			100-pin	144-pin	
Package			LFQFP100 (14 × 14)	LFQFP144 (16 × 16)	LFQFP144 (20 × 20)
Product name	eVR	512 KB	R7F701304	—	—
		1 MB	R7F701312	R7F701310	R7F701314
		2 MB	R7F701320	R7F701318	R7F701322
	DPS	512 KB	R7F701305	—	—
		1 MB	R7F701313	R7F701311	R7F701315
		2 MB	R7F701321	R7F701319	R7F701323
CPU	Frequency		160 MHz Main OSC = 16 MHz only		
	Main Core		1		
	lockstep		Yes		
	FPU	Double prec.	Yes		
	MPU		12 ch		
	TPT		Yes		
	Cache (Inst.)		8 KB 4 way		
Flash	Code Flash	Size	2 MB/1 MB/512 KB		
	DATA Flash	Size	64 KB[*1]/32 KB[*2]		
RAM	Local RAM		128 KB[*3]/64 KB[*4]		
	Trace RAM	Size	32 KB		
	ERAM (Emulation RAM)		32 KB[*1]/8 KB[*2]		
INTC	INTC1		32 ch[*5] Redundant		
	INTC2		352 ch[*5] No Redundancy		
DMA	DMAC		16 ch Redundant		
	DTS		128 ch Redundant		
Safety	ECM		Yes		
	CVM		Yes		
	BIST with status flag		Yes		
	ERROROUT		Yes		
	Clock monitor		Yes		

(2/2)

Product				RH850/P1M 100-pin	RH850/P1M 144-pin
SAR-ADC	ADC 12 bit	module		2	
		Temperature sensor		Yes	
		Analog input	ADCD0	9 ch	12 ch
			ADCD1	10 ch	12 ch
		T & H	ADCD0	6	
			ADCD1	4	
Timer	TAUD (16 bit × 16 ch)	modules		3	
	TAUJ (32 bit × 4 ch)	modules		3	
	TSG3	modules		2	
	TAPA (Hi-Z control)	modules		4	
	ENCA	modules		2	
	OSTM	modules		5	
	OSTM (Output)	modules		2	
	WDT	modules		1	
	TPBA (Timer Pattern Buffer)	modules		2	
	PIC (Peripheral interconnect)	modules		Yes	
	Clock out	modules		2	
Serial communication	RS-CAN	channels		3[*1]/2[*2]	
	FlexRay[*3]	channels		2	
	PSI5	channels		2	
	RSENT	channels		5	6
	SCI 3 (Sync/Async USART)	channels		3	
	RLIN3 (LIN master)	channels		2	
	CSIG (SPI)	channels		1	
	CSIH (SPI)	channels		4	
DataCRC				4	
Debug	NEXUS-JTAG			Yes	
	LPD			Yes	
	AUD-RAM monitor			No	Yes
	Internal Branch Trace (to Trace RAM)			Yes	
	Internal Data Trace (to Trace RAM)			Yes	
	Measurement (Memory Read)			Yes	

Note 1. Only available in devices with 2-MB flash memory.
Note 2. Only available in devices with 1-MB and 512-KB flash memories.
Note 3. Only available in devices with 2- and 1-MB flash memories.
Note 4. Only available in devices with 512-KB flash memory.
Note 5. Interrupt channels: INTC1[31:0], INTC2[383:32]

1.4 Functional Block Configuration

1.4.1 Internal Block Diagram

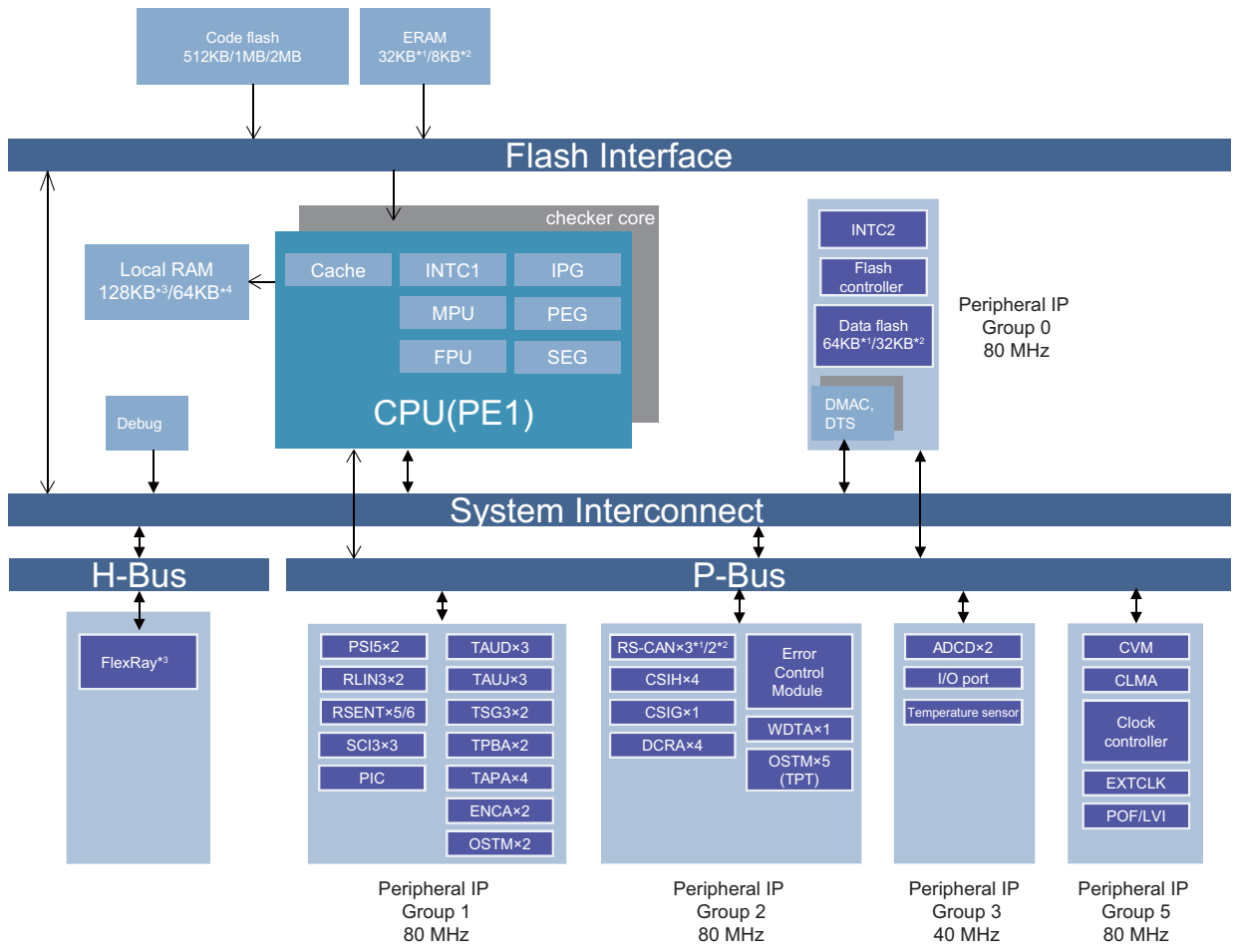

Note 1. Only available in devices with 2-MB flash memory.
Note 2. Only available in devices with 1-MB and 512-KB flash memories.
Note 3. Only available in devices with 2- and 1-MB flash memories.
Note 4. Only available in devices with 512-KB flash memory.

Figure 1.1 Internal Block Diagram

Section 2 Pins

2.1 Pin Connection Diagram

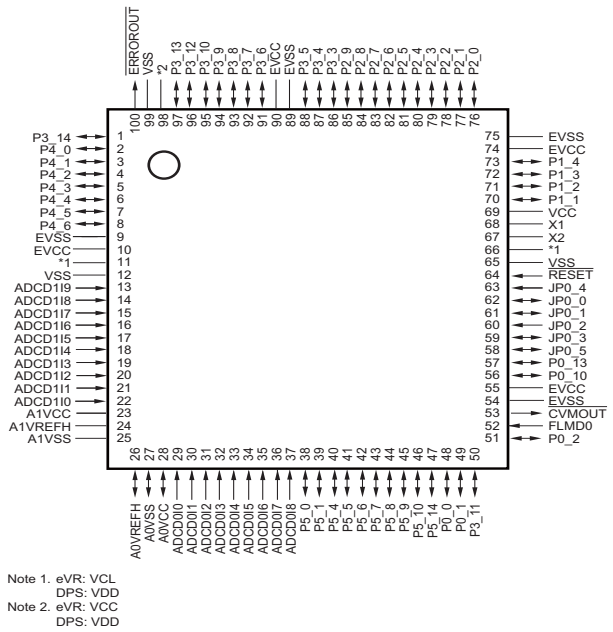

Figure 2.1 Pin Connection Diagram (100 pins)

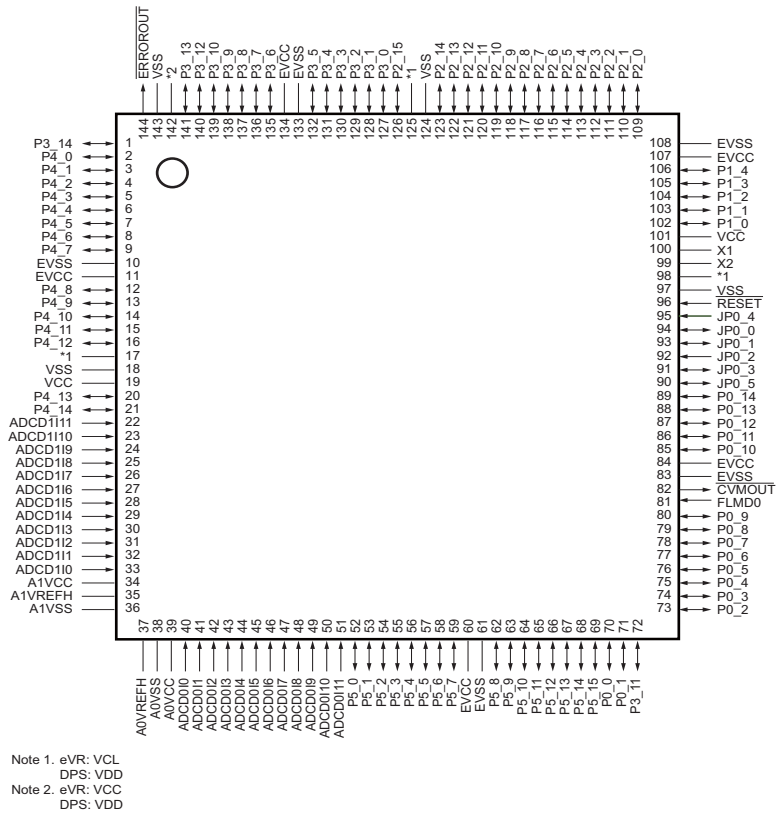

Figure 2.2 Pin Connection Diagram (144 pins)

Table 2.1 shows pin location.

CAUTION

CSIG, CSIH, SCI3, RLIN3, RSCAN, FlexRay and RSENT has limitation of available pin combinations. Details are shown in respective section. Please refer to "Combinations of Pins and Ports"

Table 2.1 Pin Assignment (1/5)

Pin Name	Pin Number			
	Pkg 100 (eVR)	Pkg 100 (DPS)	Pkg 144 (eVR)	Pkg 144 (DPS)
P3_14 / CSIH1SI / TAPA0ESO / INTP7 / TPB1O / EXTCLK0O / NMI / TSG31O7/FLMD1	1	1	1	1
P4_0 / CSIH1SO / TAUJ0I0 / TAUJ0O0 / RLIN30RX / INTP3 / TSG30PTSI0 / ENCA0E0 / FLX0TXDA*2 / ADCD1CNV0	2	2	2	2
P4_1 / CSIH1SCI / CSIH1SCO / TAUJ0I1 / TAUJ0O1 / RLIN30TX / TSG30PTSI1 / ENCA0E1 / FLX0TXENA*2 / ADCD1CNV1	3	3	3	3
P4_2 / RSCAN0RX1 / INTP6 / CSIH1RYO / TAUJ0I2 / TAUJ0O2 / SCI30SCI / SCI30SCO / TSG30PTSI2 / ENCA0EC / FLX0RXDA*2 / INTP11 / ADCD1CNV2	4	4	4	4
P4_3 / CSIH2RYI / RSCAN0TX1 / TAUJ0I3 / TAUJ0O3 / OSTM1O / TSG30CLKI / CSIH1CSS0 / FLX0RXDB*2 / INTP12 / ADCD1CNV3 / TAUD2I0 / TAUD2O0	5	5	5	5
P4_4 / CSIH2SI / TAPA1ESO / INTP8 / CSIH2CSS7 / TSG31PTSI0 / ENCA1E0 / CSIH1CSS1 / FLX0STPWT*2 / ADCD1CNV4 / TAUD2I1 / TAUD2O1	6	6	6	6
P4_5 / CSIH2SO / SCI30RX / INTP0 / RSCAN0RX0 / INTP5 / EXTCLK1O / TSG31PTSI1 / ENCA1E1 / CSIH1CSS2 / FLX0TXDB*2 / TAUD2I2 / TAUD2O2	7	7	7	7
P4_6 / CSIH2SCI / CSIH2SCO / SCI30TX / RSCAN0TX0 / TSG31PTSI2 / ENCA1EC / CSIH1CSS3 / FLX0TXENB*2 / TAUD2I3 / TAUD2O3	8	8	8	8
P4_7 / RSCAN0RX1 / INTP6 / CSIH2RYO / TAUD1O0 / ENCA0TIN0 / CSIH2CSS0 / TSG31CLKI / CSIH1CSS4 / TAUD2I4 / TAUD2O4	—	—	9	9
EVSS	9	9	10	10
EVCC	10	10	11	11
P4_8 / FLX0RXDA*2 / INTP11 / TAUD1O1 / ENCA0TIN1 / CSIH2CSS1 / $\overline{\text{CSIH1SSI}}$/ CSIH1CSS5 / TAUD2I5 / TAUD2O5	—	—	12	12
P4_9 / FLX0TXDA*2 / TAUD1O2 / ENCA1TIN0 / CSIH2CSS2 / CSIH1RYI / CSIH1CSS6 / TAUD2I6 / TAUD2O6	—	—	13	13
P4_10 / FLX0TXENA*2 / TAUD1O3 / ENCA1TIN1 / CSIH2CSS3 / CSIH1RYO / CSIH1CSS7 / TAUD2I7 / TAUD2O7	—	—	14	14
P4_11 / FLX0RXDB*2 / INTP12 / TAUD1O4 / CSIH2CSS4 / TAUJ1I0 / TAUJ1O0 / TAUD2I8 / TAUD2O8	—	—	15	15
P4_12 / FLX0TXDB*2 / TAUD1O5 / CSIH2CSS5 / TAUJ1I1 / TAUJ1O1 / TAUD2I9 / TAUD2O9	—	—	16	16
VCL	11	—	17	—
VDD	—	11	—	17
VSS	12	12	18	18
VCC	—	—	19	19
P4_13 / FLX0TXENB*2 / TAUD1O6 / $\overline{\text{CSIH2SSI}}$ / TAUJ1I2 / TAUJ1O2 / TAUD2I10 / TAUD2O10	—	—	20	20
P4_14 / FLX0STPWT*2 / TAUD1O7 / CSIH2CSS6 / TAUJ1I3 / TAUJ1O3 / TAUD2I11 / TAUD2O11	—	—	21	21
ADCD1I11	—	—	22	22
ADCD1I10	—	—	23	23

Table 2.1 Pin Assignment (2/5)

Pin Name	Pin Number			
	Pkg 100 (eVR)	Pkg 100 (DPS)	Pkg 144 (eVR)	Pkg 144 (DPS)
ADCD1I9	13	13	24	24
ADCD1I8	14	14	25	25
ADCD1I7	15	15	26	26
ADCD1I6	16	16	27	27
ADCD1I5	17	17	28	28
ADCD1I4	18	18	29	29
ADCD1I3	19	19	30	30
ADCD1I2	20	20	31	31
ADCD1I1	21	21	32	32
ADCD1I0	22	22	33	33
A1VCC	23	23	34	34
A1VREFH	24	24	35	35
A1VSS	25	25	36	36
A0VREFH	26	26	37	37
A0VSS	27	27	38	38
A0VCC	28	28	39	39
ADCD0I0	29	29	40	40
ADCD0I1	30	30	41	41
ADCD0I2	31	31	42	42
ADCD0I3	32	32	43	43
ADCD0I4	33	33	44	44
ADCD0I5	34	34	45	45
ADCD0I6	35	35	46	46
ADCD0I7	36	36	47	47
ADCD0I8	37	37	48	48
ADCD0I9	—	—	49	49
ADCD0I10	—	—	50	50
ADCD0I11	—	—	51	51
P5_0 / CSIG0SI / TAUD0O0 / TAUD0I1 / TAUD0O1 / CSIH2CSS1 / SCI30RX / INTP0	38	38	52	52
P5_1 / CSIG0SO / TAUD0O2 / TAUD0I3 / ADCD0CNV0 / TAUD0O3 / TAUD0I2 / CSIH2CSS2 / SCI30TX	39	39	53	53
P5_2 / CSIG0SCI / CSIG0SCO / TAUD0O2 / TAUD0I14 / TAUD0O3 / TAUD0I15 / SCI30SCI / SCI30SCO	—	—	54	54
P5_3 / TAUD0I7 / TAUD0I6	—	—	55	55
P5_4 / CSIG0SCI / CSIG0SCO / TAUD0O4 / TAUD0I5 / ADCD0CNV1 / TAUD0O5 / TAUD0I4 / CSIH2CSS3 / SCI30SCI / SCI30SCO	40	40	56	56
P5_5 / SENT0RX / SENT0SPCO / TAUD0O6 / TAUD0I7 / ADCD0CNV2 / TAUD0O7 / TAUD0I6 / CSIH2CSS4 / SCI31RX / INTP1	41	41	57	57
P5_6 / INTP10 / RSCAN0RX2*[1] / SENT0SPCO / TAUD0O8 / TAUD0I9 / ADCD0CNV3 / TAUD0O9 / TAUD0I8 / CSIH2CSS5 / SCI31TX	42	42	58	58
P5_7 / RSCAN0TX2*[1] / TAUD0O10 / TAUD0I11 / ADCD0CNV4 / TAUD0O11 / TAUD0I10 / CSIH2CSS6 / SCI31SCI / SCI31SCO	43	43	59	59
EVCC	—	—	60	60
EVSS	—	—	61	61
P5_8 / SENT1RX / SENT1SPCO / TAUD0O12 / TAUD0I13 / TAUD0O13 / TAUD0I12 / CSIH2CSS7 / SCI32RX / INTP2	44	44	62	62

Table 2.1 Pin Assignment (3/5)

Pin Name	Pin Number			
	Pkg 100 (eVR)	Pkg 100 (DPS)	Pkg 144 (eVR)	Pkg 144 (DPS)
P5_9 / TAUD0I14 / SENT1SPCO / TAUD0O14 / TAUD0I15 / TAUD0O15 / PSI51DIN / SCI32TX	45	45	63	63
P5_10 / RLIN30RX / INTP3 / ADCDTRG0 / ADCD0CNV0 / PSI51DOUT / SCI32SCI / SCI32SCO	46	46	64	64
P5_11 / RLIN30TX / SENT3RX / SENT3SPCO / TAUD1O10	—	—	65	65
P5_12 / RLIN31RX / INTP4 / SENT2RX / SENT2SPCO / TAUD1O11	—	—	66	66
P5_13 / RLIN31TX / SENT2SPCO / TAUD1O12 / TAUD0I13 / TAUD0I12	—	—	67	67
P5_14 / TAUJ0I0 / TAUJ0O0 / SENT3RX / SENT3SPCO / TAUD1O13 / ADCDTRG1 / ADCD0CNV1 / PSI50DIN / RLIN30RX / INTP3	47	47	68	68
P5_15 / RLIN31RX / INTP4 / SENT3SPCO / RLIN30TX	—	—	69	69
P0_0 / TAUJ0I1 / TAUJ0O1 / SENT3SPCO / TAUD1O14 / ADCD0CNV2 / PSI50DOUT / RLIN30TX	48	48	70	70
P0_1 / TAUJ0I2 / TAUJ0O2 / SENT4RX / SENT4SPCO / TAUD1O15 / ADCD0CNV3 / RLIN31RX / INTP4	49	49	71	71
P3_11 / TAUJ0I3 / TAUJ0O3 / SENT4SPCO / ADCD0CNV4 / RLIN31TX	50	50	72	72
P0_2 / SCI30RX / INTP0 / TAPA1ESO / INTP8 / TAUD2I0 / ADCD0CNV0 / TAUD2O0 / SENT5RX / SENT5SPCO	51	51	73	73
P0_3 / SCI30TX / TAUD1O8 / TAUD2I1 / ADCD0CNV1 / TAUD2O1 / SENT5SPCO/ AUDATA1	—	—	74	74
P0_4 / SCI30SCI / SCI30SCO / TAUD1O9 / TAUD2I2 / ADCD0CNV2 / TAUD2O2 / SENT4SPCO/AUDATA2	—	—	75	75
P0_5 / TAUJ1I0 / TAUJ1O0 / TAUD1O10 / TAUD2I3 / ADCD0CNV3 / TAUD2O3 / SENT3SPCO/AUDATA3	—	—	76	76
P0_6 / TAUJ1I1 / TAUJ1O1 / TAUD1O11 / TAUD2I4 / TAUD2O4 / SENT2SPCO/AUDCK	—	—	77	77
P0_7 / TAUJ1I2 / TAUJ1O2 / TAUD1O12 / TAUD2I5 / ADCDTRG0 / TAUD2O5 / SENT1SPCO / $\overline{\text{AUDSYNC}}$	—	—	78	78
P0_8 / TAUJ1I3 / TAUJ1O3 / TAUD1O13 / TAUD2I6 / ADCDTRG1 / TAUD2O6 / SENT0SPCO / $\overline{\text{AUDRST}}$	—	—	79	79
P0_9 / ADCD1CNV1 / TAUD1O14 / TAUD2I7 / ADCD0CNV4 / TAUD2O7/AUDATA0	—	—	80	80
FLMD0	52	52	81	81
$\overline{\text{CVMOUT}}$	53	53	82	82
EVSS	54	54	83	83
EVCC	55	55	84	84
P0_10 / $\overline{\text{RESETOUT}}$ / ADCD1CNV0 / $\overline{\text{EVTO}}$	56	56	85	85
P0_11 / ADCD1CNV2	—	—	86	86
P0_12 / ADCD1CNV3	—	—	87	87
P0_13 / OSTM0O / TAUD1O15 / TAUD2I7 / INTP9 / TAUD2O7/ $\overline{\text{EVTI}}$	57	57	88	88
P0_14 / ADCD1CNV4	—	—	89	89
JP0_5 / $\overline{\text{DCUTRDY}}$ / LPDCLKOUT	58	58	90	90
JP0_3 / DCUTMS	59	59	91	91
JP0_2 / FLSCI3SCKI (FPCK) / DCUTCK / LPDCLK	60	60	92	92
JP0_1 / FLSCI3TXD (FPDT) / DCUTDO / LPDO	61	61	93	93
JP0_0 / FLSCI3RXD (FPDR) / FLSCI3TXD (FPDT), FLSCI3RXD (FPDR) / DCUTDI / LPDI / LPDIO	62	62	94	94
JP0_4 / $\overline{\text{DCUTRST}}$	63	63	95	95
$\overline{\text{RESET}}$	64	64	96	96
VSS	65	65	97	97

Table 2.1 Pin Assignment (4/5)

Pin Name	Pin Number			
	Pkg 100 (eVR)	Pkg 100 (DPS)	Pkg 144 (eVR)	Pkg 144 (DPS)
VDD	—	66	—	98
VCL	66	—	98	—
X2	67	67	99	99
X1	68	68	100	100
VCC	69	69	101	101
P1_0 / RLIN30TX / CSIH3RYO	—	—	102	102
P1_1 / TAUJ2I0 / TAUJ2O0 / TAUJ1I0 / TAUJ1O0 / TAUD2I12 / TAUD2O12 / RLIN30RX / INTP3 / CSIH2CSS0 / TAUD0I6 / CSIH3RYI	70	70	103	103
P1_2 / TAUJ2I1 / TAUJ2O1 / TAUJ1I1 / TAUJ1O1 / TAUD2I13 / TAUD2O13 / CSIH2SI / TAUD0I8 / CSIH3SI	71	71	104	104
P1_3 / TAUJ2I2 / TAUJ2O2 / TAUJ1I2 / TAUJ1O2 / TAUD2I14 / TAUD2O14 / CSIH2SO / TAUD0I10 / CSIH3SO	72	72	105	105
P1_4 / TAUJ2I3 / TAUJ2O3 / TAUJ1I3 / TAUJ1O3 / TAUD2I15 / TAUD2O15 / CSIH2SCI / CSIH2SCO / CSIH3SCI / CSIH3SCO	73	73	106	106
EVCC	74	74	107	107
EVSS	75	75	108	108
P2_0 / RSCAN0RX0 / INTP5 / CSIH2SI / TAUD2I11 / TAUD2O11 / CSIH3CSS6	76	76	109	109
P2_1 / RSCAN0TX0 / CSIH2SO / TAUD2I12 / TAUD2O12 / CSIH3CSS7 / TSG30O7	77	77	110	110
P2_2 / RSCAN0RX1 / INTP6 / CSIH2SCI / CSIH2SCO / TAUD2I13 / TAUD2O13 / TPB0O / TSG30O0 / CSIH0CSS5	78	78	111	111
P2_3 / RSCAN0TX1 / CSIH2RYI / CSIH2CSS0 / TAUD2I14 / TAUD2O14 / TPB1O / TSG30O1	79	79	112	112
P2_4 / CSIH2RYO / CSIH0CSS2 / RLIN31TX / TAUJ1I3 / TAUJ1O3 / CSIH0SI / TAUD2I11 / TAUD2O11	80	80	113	113
P2_5 / SCI30RX / INTP0 / CSIH0CSS3 / RLIN31RX / INTP4 / CSIH3SO / TSG30O2 / CSIH0SO	81	81	114	114
P2_6 / SCI30TX / OSTM1O / CSIH0SCI / CSIH0SCO / CSIH3SI / CSIH0CSS4 / TSG30O3 / TAUD1I0 / TAUD1O0	82	82	115	115
P2_7 / SCI30SCI / SCI30SCO / CSIH0CSS5 / CSIH1SI / CSIH3SCI / CSIH3SCO / TSG30O4 / TAUD1I1 / TAUD1O1	83	83	116	116
P2_8 / SCI31RX / INTP1 / CSIH3RYO / CSIH0CSS6 / CSIH1SO / CSIH3RYI / CSIH3CSS0 / TSG30O5 / TAUD1I2 / TAUD1O2	84	84	117	117
P2_9 / SCI31TX / CSIH0CSS7 / CSIH1SCI / CSIH1SCO / CSIH3CSS1 / TSG30O6 / TAUD1I3 / TAUD1O3	85	85	118	118
P2_10 / TAUD2I10 / TAUD2O10 / CSIH0RYI / CSIH0CSS6 / OSTM1O	—	—	119	119
P2_11 / TAUD1I0 / TAUD1O0 / TAUD1I1 / TAUD1O1 / CSIH0CSS5 / CSIH1RYI / CSIH0RYO	—	—	120	120
P2_12 / TAUD1I2 / TAUD1O2 / TAUD1I3 / TAUD1O3 / CSIH0CSS4 / CSIH0SO	—	—	121	121
P2_13 / TAUD1I4 / TAUD1O4 / TAUD1I5 / TAUD1O5 / CSIH0CSS3 / CSIH1RYO	—	—	122	122
P2_14 / TAUD1I6 / TAUD1O6 / TAUD1I7 / TAUD1O7 / CSIH0CSS2	—	—	123	123
VSS	—	—	124	124
VCL	—	—	125	—
VDD	—	—	—	125
P2_15 / TAUD1I8 / TAUD1O8 / TAUD1I9 / TAUD1O9 / CSIH0RYI	—	—	126	126
P3_0 / TAUD1I10 / TAUD1O10 / TAUD1I11 / TAUD1O11 / CSIH0SO / CSIG0SI	—	—	127	127
P3_1 / TAUD1I12 / TAUD1O12 / TAUD1I13 / TAUD1O13 / CSIH0SCI / CSIH0SCO / CSIG0SO	—	—	128	128
P3_2 / TAUD1I14 / TAUD1O14 / TAUD1I15 / TAUD1O15 / CSIH0SI / CSIH0CSS7 / CSIG0SCI / CSIG0SCO	—	—	129	129

Table 2.1 Pin Assignment (5/5)

Pin Name	Pin Number			
	Pkg 100 (eVR)	Pkg 100 (DPS)	Pkg 144 (eVR)	Pkg 144 (DPS)
P3_3 / CSIH0RYI / SCI32TX / TAUD1I0 / CSIH2CSS1 / $\overline{\text{CSIH3SSI}}$ / CSIH3CSS4 / TAUD1O0 / TAUD1O1	86	86	130	130
P3_4 / SCI32RX / INTP2 / TAUD1I2 / CSIH2CSS2 / RLIN30RX / INTP3 / CSIG0RYO / CSIH3CSS3 / TAUD1O2 / TAUD1O3	87	87	131	131
P3_5 / SCI31SCI / SCI31SCO / TAUD0I0 / CSIH2CSS3 / CSIG0RYI / RLIN30TX / CSIH3CSS2 / TAUD0O0 / TAUD0O1	88	88	132	132
EVSS	89	89	133	133
EVCC	90	90	134	134
P3_6 / CSIH0SI / TSG31O0 / TAUD0O2 / CSIH3RYI / CSIH2CSS4 / TAUD0O3	91	91	135	135
P3_7 / CSIH0SO / TSG31O1 / RSCAN0RX0 / INTP5 / SCI30RX / INTP0 / CSIH2RYI / CSIH2CSS5 / TAUD0O5	92	92	136	136
P3_8 / CSIH0SCI / CSIH0SCO / TSG31O2 / RSCAN0TX0 / TPB1O / $\overline{\text{CSIH0SSI}}$ / CSIH2CSS6 / TAUD0O7	93	93	137	137
P3_9 / SCI32SCI / SCI32SCO / TSG31O3 / CSIH3CSS5 / CSIH0RYI / CSIH2CSS7 / TAUD0O9	94	94	138	138
P3_10 / TSG31O4 / TAUD1I6 / TAUD0O11	95	95	139	139
P3_12 / CSIH1RYO / TSG31O5 / RSCAN0RX1 / INTP6 / SCI30TX / TAUD1I8 / CSIH0CSS0 / TAUD0O13	96	96	140	140
P3_13 / CSIH1RYI / TSG31O6 / RSCAN0TX1 / SCI30SCI / SCI30SCO / TAUD1I10 / CSIH0CSS1 / TAUD0O15	97	97	141	141
VDD	—	98	—	142
VCC	98	—	142	—
VSS	99	99	143	143
$\overline{\text{ERROROUT}}$	100	100	144	144

Note 1. Only available in devices with 2-MB flash memory.

Note 2. Only available in devices with 2- and 1-MB flash memories.

2.2 Pin Expansion

2.2.1 Overview

This subsection describes pin functions, external pin lists, and external pin states at a reset and in other each operating status.

2.2.2 List of Pin Functions

Table 2.2 lists functions of each pin. “Port number” in the table indicates that the function is supported, while “—” indicates that the function is not supported. Do not use the pin function that is not supported.

Table 2.2 Pin Function (1/15)

Category	Pin name	IO	Function	Alternative Port			
				100-pin		144-pin	
				eVR	DPS	eVR	DPS
NMI	NMI	I	External non-maskable interrupt input	P3_14	P3_14	P3_14	P3_14
INTP	INTP0	I	External interrupt input 0	P3_7/ P2_5/ P0_2/ P5_0/ P4_5	P3_7/ P2_5/ P0_2/ P5_0/ P4_5	P3_7/ P2_5/ P0_2/ P5_0/ P4_5	P3_7/ P2_5/ P0_2/ P5_0/ P4_5
	INTP1	I	External interrupt input 1	P2_8/ P5_5	P2_8/ P5_5	P2_8/ P5_5	P2_8/ P5_5
	INTP2	I	External interrupt input 2	P3_4/ P5_8	P3_4/ P5_8	P3_4/ P5_8	P3_4/ P5_8
	INTP3	I	External interrupt input 3	P3_4/ P1_1/ P5_14/ P5_10/ P4_0	P3_4/ P1_1/ P5_14/ P5_10/ P4_0	P3_4/ P1_1/ P5_14/ P5_10/ P4_0	P3_4/ P1_1/ P5_14/ P5_10/ P4_0
	INTP4	I	External interrupt input 4	P2_5/ P0_1	P2_5/ P0_1	P2_5/ P0_1/ P5_15/ P5_12	P2_5/ P0_1/ P5_15/ P5_12
	INTP5	I	External interrupt input 5	P3_7/ P2_0/ P4_5	P3_7/ P2_0/ P4_5	P3_7/ P2_0/ P4_5	P3_7/ P2_0/ P4_5
	INTP6	I	External interrupt input 6	P3_12/ P2_2/ P4_2	P3_12/ P2_2/ P4_2	P3_12/ P2_2/ P4_7/ P4_2	P3_12/ P2_2/ P4_7/ P4_2
	INTP7	I	External interrupt input 7	P3_14	P3_14	P3_14	P3_14
	INTP8	I	External interrupt input 8	P0_2/ P4_4	P0_2/ P4_4	P0_2/ P4_4	P0_2/ P4_4
	INTP9	I	External interrupt input 9	P0_13	P0_13	P0_13	P0_13
	INTP10	I	External interrupt input 10	P5_6	P5_6	P5_6	P5_6
	INTP11	I	External interrupt input 11	P4_2	P4_2	P4_8/ P4_2	P4_8/ P4_2
	INTP12	I	External interrupt input 12	P4_3	P4_3	P4_11/ P4_3	P4_11/ P4_3
TAUD0	TAUD0I0	I	TAUD0 channel input 0	P3_5	P3_5	P3_5	P3_5
	TAUD0I1	I	TAUD0 channel input 1	P5_0	P5_0	P5_0	P5_0
	TAUD0I2	I	TAUD0 channel input 2	P5_1	P5_1	P5_1	P5_1
	TAUD0I3	I	TAUD0 channel input 3	P5_1	P5_1	P5_1	P5_1
	TAUD0I4	I	TAUD0 channel input 4	P5_4	P5_4	P5_4	P5_4
	TAUD0I5	I	TAUD0 channel input 5	P5_4	P5_4	P5_4	P5_4

Table 2.2 Pin Function (2/15)

Category	Pin name	IO	Function	Alternative Port			
				100-pin		144-pin	
				eVR	DPS	eVR	DPS
TAUD0	TAUD0I6	I	TAUD0 channel input 6	P1_1/ P5_5	P1_1/ P5_5	P1_1/ P5_5/ P5_3	P1_1/ P5_5/ P5_3
	TAUD0I7	I	TAUD0 channel input 7	P5_5	P5_5	P5_5/ P5_3	P5_5/ P5_3
	TAUD0I8	I	TAUD0 channel input 8	P1_2/ P5_6	P1_2/ P5_6	P1_2/ P5_6	P1_2/ P5_6
	TAUD0I9	I	TAUD0 channel input 9	P5_6	P5_6	P5_6	P5_6
	TAUD0I10	I	TAUD0 channel input 10	P1_3/ P5_7	P1_3/ P5_7	P1_3/ P5_7	P1_3/ P5_7
	TAUD0I11	I	TAUD0 channel input 11	P5_7	P5_7	P5_7	P5_7
	TAUD0I12	I	TAUD0 channel input 12	P5_8	P5_8	P5_13/ P5_8	P5_13/ P5_8
	TAUD0I13	I	TAUD0 channel input 13	P5_8	P5_8	P5_13/ P5_8	P5_13/ P5_8
	TAUD0I14	I	TAUD0 channel input 14	P5_9	P5_9	P5_9/ P5_2	P5_9/ P5_2
	TAUD0I15	I	TAUD0 channel input 15	P5_9	P5_9	P5_9/ P5_2	P5_9/ P5_2
	TAUD0O0	O	TAUD0 channel output 0	P3_5/ P5_0	P3_5/ P5_0	P3_5/ P5_0	P3_5/ P5_0
	TAUD0O1	O	TAUD0 channel output 1	P3_5/ P5_0	P3_5/ P5_0	P3_5/ P5_0	P3_5/ P5_0
	TAUD0O2	O	TAUD0 channel output 2	P3_6/ P5_1	P3_6/ P5_1	P3_6/ P5_2/ P5_1	P3_6/ P5_2/ P5_1
	TAUD0O3	O	TAUD0 channel output 3	P3_6/ P5_1	P3_6/ P5_1	P3_6/ P5_2/ P5_1	P3_6/ P5_2/ P5_1
	TAUD0O4	O	TAUD0 channel output 4	P5_4	P5_4	P5_4	P5_4
	TAUD0O5	O	TAUD0 channel output 5	P3_7/ P5_4	P3_7/ P5_4	P3_7/ P5_4	P3_7/ P5_4
	TAUD0O6	O	TAUD0 channel output 6	P5_5	P5_5	P5_5	P5_5
	TAUD0O7	O	TAUD0 channel output 7	P3_8/ P5_5	P3_8/ P5_5	P3_8/ P5_5	P3_8/ P5_5
	TAUD0O8	O	TAUD0 channel output 8	P5_6	P5_6	P5_6	P5_6
	TAUD0O9	O	TAUD0 channel output 9	P3_9/ P5_6	P3_9/ P5_6	P3_9/ P5_6	P3_9/ P5_6
	TAUD0O10	O	TAUD0 channel output 10	P5_7	P5_7	P5_7	P5_7
	TAUD0O11	O	TAUD0 channel output 11	P3_10/ P5_7	P3_10/ P5_7	P3_10/ P5_7	P3_10/ P5_7
	TAUD0O12	O	TAUD0 channel output 12	P5_8	P5_8	P5_8	P5_8
	TAUD0O13	O	TAUD0 channel output 13	P3_12/ P5_8	P3_12/ P5_8	P3_12/ P5_8	P3_12/ P5_8
	TAUD0O14	O	TAUD0 channel output 14	P5_9	P5_9	P5_9	P5_9
	TAUD0O15	O	TAUD0 channel output 15	P3_13/ P5_9	P3_13/ P5_9	P3_13/ P5_9	P3_13/ P5_9
TAUD1	TAUD1I0	I	TAUD1 channel input 0	P3_3/ P2_6	P3_3/ P2_6	P3_3/ P2_11/ P2_6	P3_3/ P2_11/ P2_6
	TAUD1I1	I	TAUD1 channel input 1	P2_7	P2_7	P2_11/ P2_7	P2_11/ P2_7
	TAUD1I2	I	TAUD1 channel input 2	P3_4/ P2_8	P3_4/ P2_8	P3_4/ P2_12/ P2_8	P3_4/ P2_12/ P2_8
	TAUD1I3	I	TAUD1 channel input 3	P2_9	P2_9	P2_12/ P2_9	P2_12/ P2_9

Table 2.2 Pin Function (3/15)

Category	Pin name	IO	Function	Alternative Port			
				100-pin		144-pin	
				eVR	DPS	eVR	DPS
TAUD1	TAUD1I4	I	TAUD1 channel input 4	—	—	P2_13	P2_13
	TAUD1I5	I	TAUD1 channel input 5	—	—	P2_13	P2_13
	TAUD1I6	I	TAUD1 channel input 6	P3_10	P3_10	P3_10/ P2_14	P3_10/ P2_14
	TAUD1I7	I	TAUD1 channel input 7	—	—	P2_14	P2_14
	TAUD1I8	I	TAUD1 channel input 8	P3_12	P3_12	P3_12/ P2_15	P3_12/ P2_15
	TAUD1I9	I	TAUD1 channel input 9	—	—	P2_15	P2_15
	TAUD1I10	I	TAUD1 channel input 10	P3_13	P3_13	P3_13/ P3_0	P3_13/ P3_0
	TAUD1I11	I	TAUD1 channel input 11	—	—	P3_0	P3_0
	TAUD1I12	I	TAUD1 channel input 12	—	—	P3_1	P3_1
	TAUD1I13	I	TAUD1 channel input 13	—	—	P3_1	P3_1
	TAUD1I14	I	TAUD1 channel input 14	—	—	P3_2	P3_2
	TAUD1I15	I	TAUD1 channel input 15	—	—	P3_2	P3_2
	TAUD1O0	O	TAUD1 channel output 0	P3_3/ P2_6	P3_3/ P2_6	P3_3/ P2_11/ P2_6/ P4_7	P3_3/ P2_11/ P2_6/ P4_7
	TAUD1O1	O	TAUD1 channel output 1	P3_3/ P2_7	P3_3/ P2_7	P3_3/ P2_11/ P2_7/ P4_8	P3_3/ P2_11/ P2_7/ P4_8
	TAUD1O2	O	TAUD1 channel output 2	P3_4/ P2_8	P3_4/ P2_8	P3_4/ P2_12/ P2_8/ P4_9	P3_4/ P2_12/ P2_8/ P4_9
	TAUD1O3	O	TAUD1 channel output 3	P3_4/ P2_9	P3_4/ P2_9	P3_4/ P2_12/ P2_9/ P4_10	P3_4/ P2_12/ P2_9/ P4_10
	TAUD1O4	O	TAUD1 channel output 4	—	—	P2_13/ P4_11	P2_13/ P4_11
	TAUD1O5	O	TAUD1 channel output 5	—	—	P2_13/ P4_12	P2_13/ P4_12
	TAUD1O6	O	TAUD1 channel output 6	—	—	P2_14/ P4_13	P2_14/ P4_13
	TAUD1O7	O	TAUD1 channel output 7	—	—	P2_14/ P4_14	P2_14/ P4_14
	TAUD1O8	O	TAUD1 channel output 8	—	—	P2_15/ P0_3	P2_15/ P0_3
	TAUD1O9	O	TAUD1 channel output 9	—	—	P2_15/ P0_4	P2_15/ P0_4
	TAUD1O10	O	TAUD1 channel output 10	—	—	P3_0/ P0_5/ P5_11	P3_0/ P0_5/ P5_11
	TAUD1O11	O	TAUD1 channel output 11	—	—	P3_0/ P0_6/ P5_12	P3_0/ P0_6/ P5_12
	TAUD1O12	O	TAUD1 channel output 12	—	—	P3_1/ P0_7/ P5_13	P3_1/ P0_7/ P5_13
	TAUD1O13	O	TAUD1 channel output 13	P5_14	P5_14	P3_1/ P0_8/ P5_14	P3_1/ P0_8/ P5_14
	TAUD1O14	O	TAUD1 channel output 14	P0_0	P0_0	P3_2/ P0_9/ P0_0	P3_2/ P0_9/ P0_0

Table 2.2 Pin Function (4/15)

Category	Pin name	IO	Function	Alternative Port			
				100-pin		144-pin	
				eVR	DPS	eVR	DPS
TAUD1	TAUD1O15	O	TAUD1 channel output 15	P0_13/ P0_1	P0_13/ P0_1	P3_2/ P0_13/ P0_1	P3_2/ P0_13/ P0_1
TAUD2	TAUD2I0	I	TAUD2 channel input 0	P0_2/ P4_3	P0_2/ P4_3	P0_2/ P4_3	P0_2/ P4_3
	TAUD2I1	I	TAUD2 channel input 1	P4_4	P4_4	P0_3/ P4_4	P0_3/ P4_4
	TAUD2I2	I	TAUD2 channel input 2	P4_5	P4_5	P0_4/ P4_5	P0_4/ P4_5
	TAUD2I3	I	TAUD2 channel input 3	P4_6	P4_6	P0_5/ P4_6	P0_5/ P4_6
	TAUD2I4	I	TAUD2 channel input 4	—	—	P0_6/ P4_7	P0_6/ P4_7
	TAUD2I5	I	TAUD2 channel input 5	—	—	P0_7/ P4_8	P0_7/ P4_8
	TAUD2I6	I	TAUD2 channel input 6	—	—	P0_8/ P4_9	P0_8/ P4_9
	TAUD2I7	I	TAUD2 channel input 7	P0_13	P0_13	P0_13/ P0_9/ P4_10	P0_13/ P0_9/ P4_10
	TAUD2I8	I	TAUD2 channel input 8	—	—	P4_11	P4_11
	TAUD2I9	I	TAUD2 channel input 9	—	—	P4_12	P4_12
	TAUD2I10	I	TAUD2 channel input 10	—	—	P2_10/ P4_13	P2_10/ P4_13
	TAUD2I11	I	TAUD2 channel input 11	P2_4/ P2_0	P2_4/ P2_0	P2_4/ P2_0/ P4_14	P2_4/ P2_0/ P4_14
	TAUD2I12	I	TAUD2 channel input 12	P2_1/ P1_1	P2_1/ P1_1	P2_1/ P1_1	P2_1/ P1_1
	TAUD2I13	I	TAUD2 channel input 13	P2_2/ P1_2	P2_2/ P1_2	P2_2/ P1_2	P2_2/ P1_2
	TAUD2I14	I	TAUD2 channel input 14	P2_3/ P1_3	P2_3/ P1_3	P2_3/ P1_3	P2_3/ P1_3
	TAUD2I15	I	TAUD2 channel input 15	P1_4	P1_4	P1_4	P1_4
	TAUD2O0	O	TAUD2 channel output 0	P0_2/ P4_3	P0_2/ P4_3	P0_2/ P4_3	P0_2/ P4_3
	TAUD2O1	O	TAUD2 channel output 1	P4_4	P4_4	P0_3/ P4_4	P0_3/ P4_4
	TAUD2O2	O	TAUD2 channel output 2	P4_5	P4_5	P0_4/ P4_5	P0_4/ P4_5
	TAUD2O3	O	TAUD2 channel output 3	P4_6	P4_6	P0_5/ P4_6	P0_5/ P4_6
	TAUD2O4	O	TAUD2 channel output 4	—	—	P0_6/ P4_7	P0_6/ P4_7
	TAUD2O5	O	TAUD2 channel output 5	—	—	P0_7/ P4_8	P0_7/ P4_8
	TAUD2O6	O	TAUD2 channel output 6	—	—	P0_8/ P4_9	P0_8/ P4_9
	TAUD2O7	O	TAUD2 channel output 7	P0_13	P0_13	P0_13/ P0_9/ P4_10	P0_13/ P0_9/ P4_10
	TAUD2O8	O	TAUD2 channel output 8	—	—	P4_11	P4_11
	TAUD2O9	O	TAUD2 channel output 9	—	—	P4_12	P4_12
	TAUD2O10	O	TAUD2 channel output 10	—	—	P2_10/ P4_13	P2_10/ P4_13
	TAUD2O11	O	TAUD2 channel output 11	P2_4/ P2_0	P2_4/ P2_0	P2_4/ P2_0/ P4_14	P2_4/ P2_0/ P4_14

Table 2.2 Pin Function (5/15)

Category	Pin name	IO	Function	Alternative Port			
				100-pin		144-pin	
				eVR	DPS	eVR	DPS
TAUD2	TAUD2O12	O	TAUD2 channel output 12	P2_1/ P1_1	P2_1/ P1_1	P2_1/ P1_1	P2_1/ P1_1
	TAUD2O13	O	TAUD2 channel output 13	P2_2/ P1_2	P2_2/ P1_2	P2_2/ P1_2	P2_2/ P1_2
	TAUD2O14	O	TAUD2 channel output 14	P2_3/ P1_3	P2_3/ P1_3	P2_3/ P1_3	P2_3/ P1_3
	TAUD2O15	O	TAUD2 channel output 15	P1_4	P1_4	P1_4	P1_4
TAUJ0	TAUJ0I0	I	TAUJ0 channel input 0	P5_14/ P4_0	P5_14/ P4_0	P5_14/ P4_0	P5_14/ P4_0
	TAUJ0I1	I	TAUJ0 channel input 1	P0_0/ P4_1	P0_0/ P4_1	P0_0/ P4_1	P0_0/ P4_1
	TAUJ0I2	I	TAUJ0 channel input 2	P0_1/ P4_2	P0_1/ P4_2	P0_1/ P4_2	P0_1/ P4_2
	TAUJ0I3	I	TAUJ0 channel input 3	P3_11/ P4_3	P3_11/ P4_3	P3_11/ P4_3	P3_11/ P4_3
	TAUJ0O0	O	TAUJ0 channel output 0	P5_14/ P4_0	P5_14/ P4_0	P5_14/ P4_0	P5_14/ P4_0
	TAUJ0O1	O	TAUJ0 channel output 1	P0_0/ P4_1	P0_0/ P4_1	P0_0/ P4_1	P0_0/ P4_1
	TAUJ0O2	O	TAUJ0 channel output 2	P0_1/ P4_2	P0_1/ P4_2	P0_1/ P4_2	P0_1/ P4_2
	TAUJ0O3	O	TAUJ0 channel output 3	P3_11/ P4_3	P3_11/ P4_3	P3_11/ P4_3	P3_11/ P4_3
TAUJ1	TAUJ1I0	I	TAUJ1 channel input 0	P1_1	P1_1	P1_1/ P0_5/ P4_11	P1_1/ P0_5/ P4_11
	TAUJ1I1	I	TAUJ1 channel input 1	P1_2	P1_2	P1_2/ P0_6/ P4_12	P1_2/ P0_6/ P4_12
	TAUJ1I2	I	TAUJ1 channel input 2	P1_3	P1_3	P1_3/ P0_7/ P4_13	P1_3/ P0_7/ P4_13
	TAUJ1I3	I	TAUJ1 channel input 3	P2_4/ P1_4	P2_4/ P1_4	P2_4/ P1_4/ P0_8/ P4_14	P2_4/ P1_4/ P0_8/ P4_14
	TAUJ1O0	O	TAUJ1 channel output 0	P1_1	P1_1	P1_1/ P0_5/ P4_11	P1_1/ P0_5/ P4_11
	TAUJ1O1	O	TAUJ1 channel output 1	P1_2	P1_2	P1_2/ P0_6/ P4_12	P1_2/ P0_6/ P4_12
	TAUJ1O2	O	TAUJ1 channel output 2	P1_3	P1_3	P1_3/ P0_7/ P4_13	P1_3/ P0_7/ P4_13
	TAUJ1O3	O	TAUJ1 channel output 3	P2_4/ P1_4	P2_4/ P1_4	P2_4/ P1_4/ P0_8/ P4_14	P2_4/ P1_4/ P0_8/ P4_14
TAUJ2	TAUJ2I0	I	TAUJ2 channel input 0	P1_1	P1_1	P1_1	P1_1
	TAUJ2I1	I	TAUJ2 channel input 1	P1_2	P1_2	P1_2	P1_2
	TAUJ2I2	I	TAUJ2 channel input 2	P1_3	P1_3	P1_3	P1_3
	TAUJ2I3	I	TAUJ2 channel input 3	P1_4	P1_4	P1_4	P1_4
	TAUJ2O0	O	TAUJ2 channel output 0	P1_1	P1_1	P1_1	P1_1
	TAUJ2O1	O	TAUJ2 channel output 1	P1_2	P1_2	P1_2	P1_2
	TAUJ2O2	O	TAUJ2 channel output 2	P1_3	P1_3	P1_3	P1_3
	TAUJ2O3	O	TAUJ2 channel output 3	P1_4	P1_4	P1_4	P1_4

Table 2.2 Pin Function (6/15)

Category	Pin name	IO	Function	Alternative Port			
				100-pin		144-pin	
				eVR	DPS	eVR	DPS
TSG30	TSG30O0	O	TSG30 timer up / down status output	P2_2	P2_2	P2_2	P2_2
	TSG30O1	O	TSG30 PWM output 1	P2_3	P2_3	P2_3	P2_3
	TSG30O2	O	TSG30 PWM output 2	P2_5	P2_5	P2_5	P2_5
	TSG30O3	O	TSG30 PWM output 3	P2_6	P2_6	P2_6	P2_6
	TSG30O4	O	TSG30 PWM output 4	P2_7	P2_7	P2_7	P2_7
	TSG30O5	O	TSG30 PWM output 5	P2_8	P2_8	P2_8	P2_8
	TSG30O6	O	TSG30 PWM output 6	P2_9	P2_9	P2_9	P2_9
	TSG30O7	O	TSG30 AD trigger diagnostic output	P2_1	P2_1	P2_1	P2_1
	TSG30PTSI0	I	TSG30 hall sensor input 0	P4_0	P4_0	P4_0	P4_0
	TSG30PTSI1	I	TSG30 hall sensor input 1	P4_1	P4_1	P4_1	P4_1
	TSG30PTSI2	I	TSG30 hall sensor input 2	P4_2	P4_2	P4_2	P4_2
	TSG30CLKI	I	TSG30 external clock input enable	P4_3	P4_3	P4_3	P4_3
TSG31	TSG31O0	O	TSG31 timer up / down status output	P3_6	P3_6	P3_6	P3_6
	TSG31O1	O	TSG31 PWM output 1	P3_7	P3_7	P3_7	P3_7
	TSG31O2	O	TSG31 PWM output 2	P3_8	P3_8	P3_8	P3_8
	TSG31O3	O	TSG31 PWM output 3	P3_9	P3_9	P3_9	P3_9
	TSG31O4	O	TSG31 PWM output 4	P3_10	P3_10	P3_10	P3_10
	TSG31O5	O	TSG31 PWM output 5	P3_12	P3_12	P3_12	P3_12
	TSG31O6	O	TSG31 PWM output 6	P3_13	P3_13	P3_13	P3_13
	TSG31O7	O	TSG31 AD trigger diagnostic output	P3_14	P3_14	P3_14	P3_14
	TSG31PTSI0	I	TSG31 hall sensor input 0	P4_4	P4_4	P4_4	P4_4
	TSG31PTSI1	I	TSG31 hall sensor input 1	P4_5	P4_5	P4_5	P4_5
	TSG31PTSI2	I	TSG31 hall sensor input 2	P4_6	P4_6	P4_6	P4_6
	TSG31CLKI	I	TSG31 external clock input enable	—	—	P4_7	P4_7
ESO	TAPA0ESO	I	Emergency Hi-Z input 0	P3_14	P3_14	P3_14	P3_14
	TAPA1ESO	I	Emergency Hi-Z input 1	P0_2/ P4_4	P0_2/ P4_4	P0_2/ P4_4	P0_2/ P4_4
ENCA0	ENCA0TIN0	I	ENCA0 capture trigger input 0	—	—	P4_7	P4_7
	ENCA0TIN1	I	ENCA0 capture trigger input 1	—	—	P4_8	P4_8
	ENCA0E0	I	ENCA0 encoder input	P4_0	P4_0	P4_0	P4_0
	ENCA0E1	I	ENCA0 encoder input	P4_1	P4_1	P4_1	P4_1
	ENCA0EC	I	ENCA0 encoder input	P4_2	P4_2	P4_2	P4_2
ENCA1	ENCA1TIN0	I	ENCA1 capture trigger input 0	—	—	P4_9	P4_9
	ENCA1TIN1	I	ENCA1 capture trigger input 1	—	—	P4_10	P4_10
	ENCA1E0	I	ENCA1 encoder input	P4_4	P4_4	P4_4	P4_4
	ENCA1E1	I	ENCA1 encoder input	P4_5	P4_5	P4_5	P4_5
	ENCA1EC	I	ENCA1 encoder input	P4_6	P4_6	P4_6	P4_6
OSTM0	OSTM0O	O	OSTM0 timer output	P0_13	P0_13	P0_13	P0_13
OSTM1	OSTM1O	O	OSTM1 timer output	P2_6/ P4_3	P2_6/ P4_3	P2_10/ P2_6/ P4_3	P2_10/ P2_6/ P4_3
TPB0	TPB0O	O	TPB0 timer pattern buffer output 0	P2_2	P2_2	P2_2	P2_2
TPB1	TPB1O	O	TPB0 timer pattern buffer output 1	P3_8/ P2_3/ P3_14	P3_8/ P2_3/ P3_14	P3_8/ P2_3/ P3_14	P3_8/ P2_3/ P3_14
CLKDIV0	EXTCLK0O	O	Clock controller output	P3_14	P3_14	P3_14	P3_14
CLKDIV1	EXTCLK1O	O	Clock controller output	P4_5	P4_5	P4_5	P4_5

Table 2.2 Pin Function (7/15)

Category	Pin name	IO	Function	Alternative Port			
				100-pin		144-pin	
				eVR	DPS	eVR	DPS
CSIG0	CSIG0RYI	I	CSIG0 ready (1) / busy (0) input signal	P3_5	P3_5	P3_5	P3_5
	CSIG0RYO	O	CSIG0 ready (1) / busy (0) output signal	P3_4	P3_4	P3_4	P3_4
	CSIG0SCI	I	CSIG0 serial clock input signal	P5_4	P5_4	P3_2/ P5_4/ P5_2	P3_2/ P5_4/ P5_2
	CSIG0SCO	O	CSIG0 serial clock output signal	P5_4	P5_4	P3_2/ P5_4/ P5_2	P3_2/ P5_4/ P5_2
	CSIG0SI	I	CSIG0 serial data input	P5_0	P5_0	P3_0/ P5_0	P3_0/ P5_0
	CSIG0SO	O	CSIG0 serial data output	P5_1	P5_1	P3_1/ P5_1	P3_1/ P5_1
CSIH0	CSIH0CSS0	O	CSIH0 serial peripheral chip select signal 0	P3_12	P3_12	P3_12	P3_12
	CSIH0CSS1	O	CSIH0 serial peripheral chip select signal 1	P3_13	P3_13	P3_13	P3_13
	CSIH0CSS2	O	CSIH0 serial peripheral chip select signal 2	P2_4	P2_4	P2_14/ P2_4	P2_14/ P2_4
	CSIH0CSS3	O	CSIH0 serial peripheral chip select signal 3	P2_5	P2_5	P2_13/ P2_5	P2_13/ P2_5
	CSIH0CSS4	O	CSIH0 serial peripheral chip select signal 4	P2_6	P2_6	P2_12/ P2_6	P2_12/ P2_6
	CSIH0CSS5	O	CSIH0 serial peripheral chip select signal 5	P2_7/ P2_2	P2_7/ P2_2	P2_11/ P2_7/ P2_2	P2_11/ P2_7/ P2_2
	CSIH0CSS6	O	CSIH0 serial peripheral chip select signal 6	P2_8	P2_8	P2_10/ P2_8	P2_10/ P2_8
	CSIH0CSS7	O	CSIH0 serial peripheral chip select signal 7	P2_9	P2_9	P3_2/ P2_9	P3_2/ P2_9
CSIH0	CSIH0SSI	I	CSIH0 serial SS function control input signal	P3_8	P3_8	P3_8	P3_8
	CSIH0RYI	I	CSIH0 ready (1) / busy (0) input signal	P3_9/ P3_3	P3_9/ P3_3	P3_9/ P3_3/ P2_15/ P2_10	P3_9/ P3_3/ P2_15/ P2_10
	CSIH0RYO	O	CSIH0 ready (1) / busy (0) output signal	—	—	P2_11	P2_11
	CSIH0SCI	I	CSIH0 serial clock input signal	P3_8/ P2_6	P3_8/ P2_6	P3_8/ P3_1/ P2_6	P3_8/ P3_1/ P2_6
	CSIH0SCO	O	CSIH0 serial clock output signal	P3_8/ P2_6	P3_8/ P2_6	P3_8/ P3_1/ P2_6	P3_8/ P3_1/ P2_6
	CSIH0SI	I	CSIH0 serial data input	P3_6/ P2_4	P3_6/ P2_4	P3_6/ P3_2/ P2_4	P3_6/ P3_2/ P2_4
	CSIH0SO	O	CSIH0 serial data output	P3_7/ P2_5	P3_7/ P2_5	P3_7/ P3_0/ P2_12/ P2_5	P3_7/ P3_0/ P2_12/ P2_5
CSIH1	CSIH1CSS0	O	CSIH1 serial peripheral chip select signal 0	P4_3	P4_3	P4_3	P4_3
	CSIH1CSS1	O	CSIH1 serial peripheral chip select signal 1	P4_4	P4_4	P4_4	P4_4
	CSIH1CSS2	O	CSIH1 serial peripheral chip select signal 2	P4_5	P4_5	P4_5	P4_5
	CSIH1CSS3	O	CSIH1 serial peripheral chip select signal 3	P4_6	P4_6	P4_6	P4_6
	CSIH1CSS4	O	CSIH1 serial peripheral chip select signal 4	—	—	P4_7	P4_7
	CSIH1CSS5	O	CSIH1 serial peripheral chip select signal 5	—	—	P4_8	P4_8
	CSIH1CSS6	O	CSIH1 serial peripheral chip select signal 6	—	—	P4_9	P4_9
	CSIH1CSS7	O	CSIH1 serial peripheral chip select signal 7	—	—	P4_10	P4_10
	$\overline{\text{CSIH1SSI}}$	I	CSIH1 serial SS function control input signal	—	—	P4_8	P4_8

Table 2.2 Pin Function (8/15)

Category	Pin name	IO	Function	Alternative Port			
				100-pin		144-pin	
				eVR	DPS	eVR	DPS
CSIH1	CSIH1RYI	I	CSIH1 ready (1) / busy (0) input signal	P3_13	P3_13	P3_13/ P2_11/ P4_9	P3_13/ P2_11/ P4_9
	CSIH1RYO	O	CSIH1 ready (1) / busy (0) output signal	P3_12/ P4_2	P3_12/ P4_2	P3_12/ P2_13/ P4_10/ P4_2	P3_12/ P2_13/ P4_10/ P4_2
	CSIH1SCI	I	CSIH1 serial clock input signal	P2_9/ P4_1	P2_9/ P4_1	P2_9/ P4_1	P2_9/ P4_1
	CSIH1SCO	O	CSIH1 serial clock output signal	P2_9/ P4_1	P2_9/ P4_1	P2_9/ P4_1	P2_9/ P4_1
	CSIH1SI	I	CSIH1 serial data input	P2_7/ P3_14	P2_7/ P3_14	P2_7/ P3_14	P2_7/ P3_14
	CSIH1SO	O	CSIH1 serial data output	P2_8/ P4_0	P2_8/ P4_0	P2_8/ P4_0	P2_8/ P4_0
CSIH2	CSIH2CSS0	O	CSIH2 serial peripheral chip select signal 0	P2_3/ P1_1	P2_3/ P1_1	P2_3/ P1_1/ P4_7	P2_3/ P1_1/ P4_7
	CSIH2CSS1	O	CSIH2 serial peripheral chip select signal 1	P3_3/ P5_0	P3_3/ P5_0	P3_3/ P5_0/ P4_8	P3_3/ P5_0/ P4_8
	CSIH2CSS2	O	CSIH2 serial peripheral chip select signal 2	P3_4/ P5_1	P3_4/ P5_1	P3_4/ P5_1/ P4_9	P3_4/ P5_1/ P4_9
	CSIH2CSS3	O	CSIH2 serial peripheral chip select signal 3	P3_5/ P5_4	P3_5/ P5_4	P3_5/ P5_4/ P4_10	P3_5/ P5_4/ P4_10
	CSIH2CSS4	O	CSIH2 serial peripheral chip select signal 4	P3_6/ P5_5	P3_6/ P5_5	P3_6/ P5_5/ P4_11	P3_6/ P5_5/ P4_11
CSIH2	CSIH2CSS5	O	CSIH2 serial peripheral chip select signal 5	P3_7/ P5_6	P3_7/ P5_6	P3_7/ P5_6/ P4_12	P3_7/ P5_6/ P4_12
	CSIH2CSS6	O	CSIH2 serial peripheral chip select signal 6	P3_8/ P5_7	P3_8/ P5_7	P3_8/ P5_7/ P4_14	P3_8/ P5_7/ P4_14
	CSIH2CSS7	O	CSIH2 serial peripheral chip select signal 7	P3_9/ P5_8/ P4_4	P3_9/ P5_8/ P4_4	P3_9/ P5_8/ P4_4	P3_9/ P5_8/ P4_4
	$\overline{\text{CSIH2SSI}}$	I	CSIH2 serial SS function control input signal	—	—	P4_13	P4_13
	CSIH2RYI	I	CSIH2 ready (1) / busy (0) input signal	P3_7/ P2_3/ P4_3	P3_7/ P2_3/ P4_3	P3_7/ P2_3/ P4_3	P3_7/ P2_3/ P4_3
	CSIH2RYO	O	CSIH2 ready (1) / busy (0) output signal	P2_4	P2_4	P2_4/ P4_7	P2_4/ P4_7
	CSIH2SCI	I	CSIH2 serial clock input signal	P2_2/ P1_4/ P4_6	P2_2/ P1_4/ P4_6	P2_2/ P1_4/ P4_6	P2_2/ P1_4/ P4_6
	CSIH2SCO	O	CSIH2 serial clock output signal	P2_2/ P1_4/ P4_6	P2_2/ P1_4/ P4_6	P2_2/ P1_4/ P4_6	P2_2/ P1_4/ P4_6
	CSIH2SI	I	CSIH2 serial data input	P2_0/ P1_2/ P4_4	P2_0/ P1_2/ P4_4	P2_0/ P1_2/ P4_4	P2_0/ P1_2/ P4_4
	CSIH2SO	O	CSIH2 serial data output	P2_1/ P1_3/ P4_5	P2_1/ P1_3/ P4_5	P2_1/ P1_3/ P4_5	P2_1/ P1_3/ P4_5
CSIH3	CSIH3CSS0	O	CSIH3 serial peripheral chip select signal 0	P2_8	P2_8	P2_8	P2_8
	CSIH3CSS1	O	CSIH3 serial peripheral chip select signal 1	P2_9	P2_9	P2_9	P2_9
	CSIH3CSS2	O	CSIH3 serial peripheral chip select signal 2	P3_5	P3_5	P3_5	P3_5
	CSIH3CSS3	O	CSIH3 serial peripheral chip select signal 3	P3_4	P3_4	P3_4	P3_4

Table 2.2 Pin Function (9/15)

Category	Pin name	IO	Function	Alternative Port			
				100-pin		144-pin	
				eVR	DPS	eVR	DPS
CSIH3	CSIH3CSS4	O	CSIH3 serial peripheral chip select signal 4	P3_3	P3_3	P3_3	P3_3
	CSIH3CSS5	O	CSIH3 serial peripheral chip select signal 5	P3_9	P3_9	P3_9	P3_9
	CSIH3CSS6	O	CSIH3 serial peripheral chip select signal 6	P2_0	P2_0	P2_0	P2_0
	CSIH3CSS7	O	CSIH3 serial peripheral chip select signal 7	P2_1	P2_1	P2_1	P2_1
	CSIH3SSI	I	CSIH3 serial SS function control input signal	P3_3	P3_3	P3_3	P3_3
	CSIH3RYI	I	CSIH3 ready (1) / busy (0) input signal	P3_6/ P2_8/ P1_1	P3_6/ P2_8/ P1_1	P3_6/ P2_8/ P1_1	P3_6/ P2_8/ P1_1
	CSIH3RYO	O	CSIH3 ready (1) / busy (0) output signal	P2_8	P2_8	P2_8/ P1_0	P2_8/ P1_0
	CSIH3SCI	I	CSIH3 serial clock input signal	P2_7/ P1_4	P2_7/ P1_4	P2_7/ P1_4	P2_7/ P1_4
	CSIH3SCO	O	CSIH3 serial clock output signal	P2_7/ P1_4	P2_7/ P1_4	P2_7/ P1_4	P2_7/ P1_4
	CSIH3SI	I	CSIH3 serial data input	P2_6/ P1_2	P2_6/ P1_2	P2_6/ P1_2	P2_6/ P1_2
	CSIH3SO	O	CSIH3 serial data output	P2_5/ P1_3	P2_5/ P1_3	P2_5/ P1_3	P2_5/ P1_3
SCI30	SCI30RX	I	SCI30 data input	P3_7/ P2_5/ P0_2/ P5_0/ P4_5	P3_7/ P2_5/ P0_2/ P5_0/ P4_5	P3_7/ P2_5/ P0_2/ P5_0/ P4_5	P3_7/ P2_5/ P0_2/ P5_0/ P4_5
	SCI30TX	O	SCI30 data output	P3_12/ P2_6/ P5_1/ P4_6	P3_12/ P2_6/ P5_1/ P4_6	P3_12/ P2_6/ P0_3/ P5_1/ P4_6	P3_12/ P2_6/ P0_3/ P5_1/ P4_6
	SCI30SCI	I	SCI30 serial clock input	P3_13/ P2_7/ P5_4/ P4_2	P3_13/ P2_7/ P5_4/ P4_2	P3_13/ P2_7/ P0_4/ P5_4/ P5_2/ P4_2	P3_13/ P2_7/ P0_4/ P5_4/ P5_2/ P4_2
	SCI30SCO	O	SCI30 serial clock output	P3_13/ P2_7/ P5_4/ P4_2	P3_13/ P2_7/ P5_4/ P4_2	P3_13/ P2_7/ P0_4/ P5_4/ P5_2/ P4_2	P3_13/ P2_7/ P0_4/ P5_4/ P5_2/ P4_2
SCI31	SCI31RX	I	SCI31 data input	P2_8/ P5_5	P2_8/ P5_5	P2_8/ P5_5	P2_8/ P5_5
	SCI31TX	O	SCI31 data output	P2_9/ P5_6	P2_9/ P5_6	P2_9/ P5_6	P2_9/ P5_6
	SCI31SCI	I	SCI31 serial clock input	P3_5/ P5_7	P3_5/ P5_7	P3_5/ P5_7	P3_5/ P5_7
	SCI31SCO	O	SCI31 serial clock output	P3_5/ P5_7	P3_5/ P5_7	P3_5/ P5_7	P3_5/ P5_7
SCI32	SCI32RX	I	SCI32 data input	P3_4/ P5_8	P3_4/ P5_8	P3_4/ P5_8	P3_4/ P5_8
	SCI32TX	O	SCI32 data output	P3_3/ P5_9	P3_3/ P5_9	P3_3/ P5_9	P3_3/ P5_9
	SCI32SCI	I	SCI32 serial clock input	P3_9/ P5_10	P3_9/ P5_10	P3_9/ P5_10	P3_9/ P5_10
	SCI32SCO	O	SCI32 serial clock output	P3_9/ P5_10	P3_9/ P5_10	P3_9/ P5_10	P3_9/ P5_10

Table 2.2 Pin Function (10/15)

Category	Pin name	IO	Function	Alternative Port			
				100-pin		144-pin	
				eVR	DPS	eVR	DPS
RLIN30	RLIN30RX	I	RLIN30 data input	P3_4/ P1_1/ P5_14/ P5_10/ P4_0	P3_4/ P1_1/ P5_14/ P5_10/ P4_0	P3_4/ P1_1/ P5_14/ P5_10/ P4_0	P3_4/ P1_1/ P5_14/ P5_10/ P4_0
	RLIN30TX	O	RLIN30 data output	P3_5/ P0_0/ P4_1	P3_5/ P0_0/ P4_1	P3_5/ P1_0/ P0_0/ P5_15/ P5_11/ P4_1	P3_5/ P1_0/ P0_0/ P5_15/ P5_11/ P4_1
RLIN31	RLIN31RX	I	RLIN31 data input	P2_5/ P0_1	P2_5/ P0_1	P2_5/ P0_1/ P5_15/ P5_12	P2_5/ P0_1/ P5_15/ P5_12
	RLIN31TX	O	RLIN31 data output	P2_4/ P3_11	P2_4/ P3_11	P2_4/ P3_11/ P5_13	P2_4/ P3_11/ P5_13
RSCAN0	RSCAN0RX0	I	RSCAN0 receive data input 0	P3_7/ P2_0/ P4_5	P3_7/ P2_0/ P4_5	P3_7/ P2_0/ P4_5	P3_7/ P2_0/ P4_5
	RSCAN0TX0	O	RSCAN0 transmit data output 0	P3_8/ P2_1/ P4_6	P3_8/ P2_1/ P4_6	P3_8/ P2_1/ P4_6	P3_8/ P2_1/ P4_6
	RSCAN0RX1	I	RSCAN0 receive data input 1	P3_12/ P2_2/ P4_2	P3_12/ P2_2/ P4_2	P3_12/ P2_2/ P4_7/ P4_2	P3_12/ P2_2/ P4_7/ P4_2
	RSCAN0TX1	O	RSCAN0 transmit data output 1	P3_13/ P2_3/ P4_3	P3_13/ P2_3/ P4_3	P3_13/ P2_3/ P4_3	P3_13/ P2_3/ P4_3
	RSCAN0RX2[*1]	I	RSCAN0 receive data input 2	P5_6	P5_6	P5_6	P5_6
	RSCAN0TX2[*1]	O	RSCAN0 transmit data output 2	P5_7	P5_7	P5_7	P5_7
FLX0[*2]	FLX0RXDA	I	FLX0 channel A receive data input	P4_2	P4_2	P4_8/ P4_2	P4_8/ P4_2
	FLX0RXDB	I	FLX0 channel B receive data input	P4_3	P4_3	P4_11/ P4_3	P4_11/ P4_3
	FLX0STPWT	I	FLX0 stop watch trigger input	P4_4	P4_4	P4_14/ P4_4	P4_14/ P4_4
	FLX0TXDA	O	FLX0 channel A transmit data output	P4_0	P4_0	P4_9/ P4_0	P4_9/ P4_0
	FLX0TXDB	O	FLX0 channel B transmit data output	P4_5	P4_5	P4_12/ P4_5	P4_12/ P4_5
	FLX0TXENA	O	FLX0 channel A transmit enable	P4_1	P4_1	P4_10/ P4_1	P4_10/ P4_1
	FLX0TXENB	O	FLX0 channel B transmit enable	P4_6	P4_6	P4_13/ P4_6	P4_13/ P4_6
PSI50	PSI50DIN	I	PSI50 receive data input	P5_14	P5_14	P5_14	P5_14
	PSI50DOUT	O	PSI50 transmit data output	P0_0	P0_0	P0_0	P0_0
PSI51	PSI51DIN	I	PSI51 receive data input	P5_9	P5_9	P5_9	P5_9
	PSI51DOUT	O	PSI51 transmit data output	P5_10	P5_10	P5_10	P5_10
SENT0	SENT0RX	I	SENT ch0 sensor data input	P5_5	P5_5	P5_5	P5_5
	SENT0SPCO	O	SENT ch0 SPC extension output	P5_6/ P5_5	P5_6/ P5_5	P0_8/ P5_6/ P5_5	P0_8/ P5_6/ P5_5
SENT1	SENT1RX	I	SENT ch1 sensor data input	P5_8	P5_8	P5_8	P5_8
	SENT1SPCO	O	SENT ch1 SPC extension output	P5_9/ P5_8	P5_9/ P5_8	P0_7/ P5_9/ P5_8	P0_7/ P5_9/ P5_8

Table 2.2 Pin Function (11/15)

Category	Pin name	IO	Function	Alternative Port			
				100-pin		144-pin	
				eVR	DPS	eVR	DPS
SENT2	SENT2RX	I	SENT ch2 sensor data input	—	—	P5_12	P5_12
	SENT2SPCO	O	SENT ch2 SPC extension output	—	—	P0_6/ P5_13/ P5_12	P0_6/ P5_13/ P5_12
SENT3	SENT3RX	I	SENT ch3 sensor data input	P5_14	P5_14	P5_14/ P5_11	P5_14/ P5_11
	SENT3SPCO	O	SENT ch3 SPC extension output	P0_0/ P5_14	P0_0/ P5_14	P0_5/ P0_0/ P5_15/ P5_14/ P5_11	P0_5/ P0_0/ P5_15/ P5_14/ P5_11
SENT4	SENT4RX	I	SENT ch4 sensor data input	P0_1	P0_1	P0_1	P0_1
	SENT4SPCO	O	SENT ch4 SPC extension output	P3_11/ P0_1	P3_11/ P0_1	P0_4/ P3_11/ P0_1	P0_4/ P3_11/ P0_1
SENT5	SENT5RX	I	SENT ch5 sensor data input	P0_2	P0_2	P0_2	P0_2
	SENT5SPCO	O	SENT ch5 SPC extension output	P0_2	P0_2	P0_3/ P0_2	P0_3/ P0_2
ADCD0	ADCDTRG0	I	AD trigger input 0	P5_10	P5_10	P0_7/ P5_10	P0_7/ P5_10
	ADCD0CNV0	O	ADCD0 AD conversion start signal	P0_2/ P5_10/ P5_1	P0_2/ P5_10/ P5_1	P0_2/ P5_10/ P5_1	P0_2/ P5_10/ P5_1
	ADCD0CNV1	O	ADCD0 AD conversion start signal	P5_14/ P5_4	P5_14/ P5_4	P0_3/ P5_14/ P5_4	P0_3/ P5_14/ P5_4
	ADCD0CNV2	O	ADCD0 AD conversion start signal	P0_0/ P5_5	P0_0/ P5_5	P0_4/ P0_0/ P5_5	P0_4/ P0_0/ P5_5
	ADCD0CNV3	O	ADCD0 AD conversion start signal	P0_1/ P5_6	P0_1/ P5_6	P0_5/ P0_1/ P5_6	P0_5/ P0_1/ P5_6
	ADCD0CNV4	O	ADCD0 AD conversion start signal	P3_11/ P5_7	P3_11/ P5_7	P0_9/ P3_11/ P5_7	P0_9/ P3_11/ P5_7
	ADCD0I0	I	ADCD0 input channel	Not alternative	Not alternative	Not alternative	Not alternative
	ADCD0I1	I	ADCD0 input channel	Not alternative	Not alternative	Not alternative	Not alternative
	ADCD0I2	I	ADCD0 input channel	Not alternative	Not alternative	Not alternative	Not alternative
	ADCD0I3	I	ADCD0 input channel	Not alternative	Not alternative	Not alternative	Not alternative
	ADCD0I4	I	ADCD0 input channel	Not alternative	Not alternative	Not alternative	Not alternative
	ADCD0I5	I	ADCD0 input channel	Not alternative	Not alternative	Not alternative	Not alternative
	ADCD0I6	I	ADCD0 input channel	Not alternative	Not alternative	Not alternative	Not alternative
	ADCD0I7	I	ADCD0 input channel	Not alternative	Not alternative	Not alternative	Not alternative
	ADCD0I8	I	ADCD0 input channel	Not alternative	Not alternative	Not alternative	Not alternative
	ADCD0I9	I	ADCD0 input channel	—	—	Not alternative	Not alternative
	ADCD0I10	I	ADCD0 input channel	—	—	Not alternative	Not alternative
	ADCD0I11	I	ADCD0 input channel	—	—	Not alternative	Not alternative

Table 2.2 Pin Function (12/15)

Category	Pin name	IO	Function	Alternative Port			
				100-pin		144-pin	
				eVR	DPS	eVR	DPS
ADCD1	ADCDTRG1	I	AD trigger input 1	P5_14	P5_14	P0_8/ P5_14	P0_8/ P5_14
	ADCD1CNV0	O	ADCD1 AD conversion start signal	P0_10/ P4_0	P0_10/ P4_0	P0_10/ P4_0	P0_10/ P4_0
	ADCD1CNV1	O	ADCD1 AD conversion start signal	P4_1	P4_1	P0_9/ P4_1	P0_9/ P4_1
	ADCD1CNV2	O	ADCD1 AD conversion start signal	P4_2	P4_2	P0_11/ P4_2	P0_11/ P4_2
	ADCD1CNV3	O	ADCD1 AD conversion start signal	P4_3	P4_3	P0_12/ P4_3	P0_12/ P4_3
	ADCD1CNV4	O	ADCD1 AD conversion start signal	P4_4	P4_4	P0_14/ P4_4	P0_14/ P4_4
	ADCD1I0	I	ADCD1 input channel	Not alternative	Not alternative	Not alternative	Not alternative
	ADCD1I1	I	ADCD1 input channel	Not alternative	Not alternative	Not alternative	Not alternative
	ADCD1I2	I	ADCD1 input channel	Not alternative	Not alternative	Not alternative	Not alternative
	ADCD1I3	I	ADCD1 input channel	Not alternative	Not alternative	Not alternative	Not alternative
	ADCD1I4	I	ADCD1 input channel	Not alternative	Not alternative	Not alternative	Not alternative
	ADCD1I5	I	ADCD1 input channel	Not alternative	Not alternative	Not alternative	Not alternative
	ADCD1I6	I	ADCD1 input channel	Not alternative	Not alternative	Not alternative	Not alternative
	ADCD1I7	I	ADCD1 input channel	Not alternative	Not alternative	Not alternative	Not alternative
	ADCD1I8	I	ADCD1 input channel	Not alternative	Not alternative	Not alternative	Not alternative
	ADCD1I9	I	ADCD1 input channel	Not alternative	Not alternative	Not alternative	Not alternative
	ADCD1I10	I	ADCD1 input channel	—	—	Not alternative	Not alternative
	ADCD1I11	I	ADCD1 input channel	—	—	Not alternative	Not alternative
Nexus	DCUTCK	I	Debug clock	JP0_2	JP0_2	JP0_2	JP0_2
	DCUTDI	I	Debug data input	JP0_0	JP0_0	JP0_0	JP0_0
	DCUTDO	O	Debug data output	JP0_1	JP0_1	JP0_1	JP0_1
	DCUTMS	I	Debug mode select	JP0_3	JP0_3	JP0_3	JP0_3
	$\overline{\text{DCUTRDY}}$	O	Debug ready	JP0_5	JP0_5	JP0_5	JP0_5
	$\overline{\text{DCUTRST}}$	I	Debug reset	JP0_4	JP0_4	JP0_4	JP0_4
LPD	LPDCLK	I	LPD clock input (4-pin mode)	JP0_2	JP0_2	JP0_2	JP0_2
	LPDCLKOUT	O	LPD clock output (4-pin mode)	JP0_5	JP0_5	JP0_5	JP0_5
	LPDI	I	LPD data input (4-pin mode)	JP0_0	JP0_0	JP0_0	JP0_0
	LPDIO	I/O	LPD data input / output (1-pin mode)	JP0_0	JP0_0	JP0_0	JP0_0
	LPDO	O	LPD data output (4-pin mode)	JP0_1	JP0_1	JP0_1	JP0_1
Nexus	$\overline{\text{EVTO}}$	O	Debug I/F event output signal	P0_10	P0_10	P0_10	P0_10
	$\overline{\text{EVTI}}$	I	Debug I/F event input signal	P0_13	P0_13	P0_13	P0_13

Table 2.2 Pin Function (13/15)

Category	Pin name	IO	Function	Alternative Port			
				100-pin		144-pin	
				eVR	DPS	eVR	DPS
AUDR	$\overline{\text{AUDRST}}$	I	AUDR reset signal	—	—	P0_8	P0_8
	AUDCK	I	AUDR clock signal	—	—	P0_6	P0_6
	$\overline{\text{AUDSYNC}}$	I	AUDR synchronous signal	—	—	P0_7	P0_7
	AUDATA0	I/O	AUDR data signal	—	—	P0_9	P0_9
	AUDATA1	I/O	AUDR data signal	—	—	P0_3	P0_3
	AUDATA2	I/O	AUDR data signal	—	—	P0_4	P0_4
	AUDATA3	I/O	AUDR data signal	—	—	P0_5	P0_5
FLSCI3	FLSCI3TXD (FPDT)	O	Flash Writer I/F TxD	JP0_0/ JP0_1	JP0_0/ JP0_1	JP0_0/ JP0_1	JP0_0/ JP0_1
	FLSCI3RXD (FPDR)	I	Flash Writer I/F RxD	JP0_0	JP0_0	JP0_0	JP0_0
	FLSCI3SCKI (FPCK)	I	Flash Writer I/F SCK	JP0_2	JP0_2	JP0_2	JP0_2
MODE	FLMD1	I	Secondary operating mode select pin	P3_14	P3_14	P3_14	P3_14
System	FLMD0	I	Primary operating mode select	Not alternative	Not alternative	Not alternative	Not alternative
	$\overline{\text{RESET}}$	I	Reset input	Not alternative	Not alternative	Not alternative	Not alternative
	$\overline{\text{RESETOUT}}$	O	Reset output	P0_10	P0_10	P0_10	P0_10
	X1	—	Main clock crystal oscillator connections	Not alternative	Not alternative	Not alternative	Not alternative
	X2	—	Main clock crystal oscillator connections	Not alternative	Not alternative	Not alternative	Not alternative
CVM	$\overline{\text{CVMOUT}}$	O	CVM internal voltage error detection output signal	Not alternative	Not alternative	Not alternative	Not alternative
Safety	$\overline{\text{ERROROUT}}$	O	Error output signal	Not alternative	Not alternative	Not alternative	Not alternative
JP0	JP0_0	I/O	JTAG port	JP0_0	JP0_0	JP0_0	JP0_0
	JP0_1	I/O	JTAG port	JP0_1	JP0_1	JP0_1	JP0_1
	JP0_2	I	JTAG port	JP0_2	JP0_2	JP0_2	JP0_2
JPORT0	JP0_3	I/O	JTAG port	JP0_3	JP0_3	JP0_3	JP0_3
	JP0_4	I	JTAG port	JP0_4	JP0_4	JP0_4	JP0_4
	JP0_5	I/O	JTAG port	JP0_5	JP0_5	JP0_5	JP0_5
P0	P0_0	I/O	Port	P0_0	P0_0	P0_0	P0_0
	P0_1	I/O	Port	P0_1	P0_1	P0_1	P0_1
	P0_2	I/O	Port	P0_2	P0_2	P0_2	P0_2
	P0_3	I/O	Port	—	—	P0_3	P0_3
	P0_4	I/O	Port	—	—	P0_4	P0_4
	P0_5	I/O	Port	—	—	P0_5	P0_5
	P0_6	I/O	Port	—	—	P0_6	P0_6
	P0_7	I/O	Port	—	—	P0_7	P0_7
	P0_8	I/O	Port	—	—	P0_8	P0_8
	P0_9	I/O	Port	—	—	P0_9	P0_9
	P0_10	I/O	Port	P0_10	P0_10	P0_10	P0_10
	P0_11	I/O	Port	—	—	P0_11	P0_11
	P0_12	I/O	Port	—	—	P0_12	P0_12
	P0_13	I/O	Port	P0_13	P0_13	P0_13	P0_13
	P0_14	I/O	Port	—	—	P0_14	P0_14

Table 2.2 Pin Function (14/15)

Category	Pin name	IO	Function	Alternative Port			
				100-pin		144-pin	
				eVR	DPS	eVR	DPS
P1	P1_0	I/O	Port	—	—	P1_0	P1_0
	P1_1	I/O	Port	P1_1	P1_1	P1_1	P1_1
	P1_2	I/O	Port	P1_2	P1_2	P1_2	P1_2
	P1_3	I/O	Port	P1_3	P1_3	P1_3	P1_3
	P1_4	I/O	Port	P1_4	P1_4	P1_4	P1_4
P2	P2_0	I/O	Port	P2_0	P2_0	P2_0	P2_0
	P2_1	I/O	Port	P2_1	P2_1	P2_1	P2_1
	P2_2	I/O	Port	P2_2	P2_2	P2_2	P2_2
	P2_3	I/O	Port	P2_3	P2_3	P2_3	P2_3
	P2_4	I/O	Port	P2_4	P2_4	P2_4	P2_4
	P2_5	I/O	Port	P2_5	P2_5	P2_5	P2_5
	P2_6	I/O	Port	P2_6	P2_6	P2_6	P2_6
	P2_7	I/O	Port	P2_7	P2_7	P2_7	P2_7
	P2_8	I/O	Port	P2_8	P2_8	P2_8	P2_8
	P2_9	I/O	Port	P2_9	P2_9	P2_9	P2_9
	P2_10	I/O	Port	—	—	P2_10	P2_10
	P2_11	I/O	Port	—	—	P2_11	P2_11
	P2_12	I/O	Port	—	—	P2_12	P2_12
	P2_13	I/O	Port	—	—	P2_13	P2_13
	P2_14	I/O	Port	—	—	P2_14	P2_14
	P2_15	I/O	Port	—	—	P2_15	P2_15
P3	P3_0	I/O	Port	—	—	P3_0	P3_0
	P3_1	I/O	Port	—	—	P3_1	P3_1
	P3_2	I/O	Port	—	—	P3_2	P3_2
	P3_3	I/O	Port	P3_3	P3_3	P3_3	P3_3
	P3_4	I/O	Port	P3_4	P3_4	P3_4	P3_4
	P3_5	I/O	Port	P3_5	P3_5	P3_5	P3_5
P3	P3_6	I/O	Port	P3_6	P3_6	P3_6	P3_6
	P3_7	I/O	Port	P3_7	P3_7	P3_7	P3_7
	P3_8	I/O	Port	P3_8	P3_8	P3_8	P3_8
	P3_9	I/O	Port	P3_9	P3_9	P3_9	P3_9
	P3_10	I/O	Port	P3_10	P3_10	P3_10	P3_10
	P3_11	I/O	Port	P3_11	P3_11	P3_11	P3_11
	P3_12	I/O	Port	P3_12	P3_12	P3_12	P3_12
	P3_13	I/O	Port	P3_13	P3_13	P3_13	P3_13
	P3_14	I/O	Port	P3_14	P3_14	P3_14	P3_14

Table 2.2 Pin Function (15/15)

Category	Pin name	IO	Function	Alternative Port			
				100-pin		144-pin	
				eVR	DPS	eVR	DPS
P4	P4_0	I/O	Port	P4_0	P4_0	P4_0	P4_0
	P4_1	I/O	Port	P4_1	P4_1	P4_1	P4_1
	P4_2	I/O	Port	P4_2	P4_2	P4_2	P4_2
	P4_3	I/O	Port	P4_3	P4_3	P4_3	P4_3
	P4_4	I/O	Port	P4_4	P4_4	P4_4	P4_4
	P4_5	I/O	Port	P4_5	P4_5	P4_5	P4_5
	P4_6	I/O	Port	P4_6	P4_6	P4_6	P4_6
	P4_7	I/O	Port	—	—	P4_7	P4_7
	P4_8	I/O	Port	—	—	P4_8	P4_8
	P4_9	I/O	Port	—	—	P4_9	P4_9
	P4_10	I/O	Port	—	—	P4_10	P4_10
	P4_11	I/O	Port	—	—	P4_11	P4_11
	P4_12	I/O	Port	—	—	P4_12	P4_12
	P4_13	I/O	Port	—	—	P4_13	P4_13
	P4_14	I/O	Port	—	—	P4_14	P4_14
P5	P5_0	I/O	Port	P5_0	P5_0	P5_0	P5_0
	P5_1	I/O	Port	P5_1	P5_1	P5_1	P5_1
	P5_2	I/O	Port	—	—	P5_2	P5_2
	P5_3	I/O	Port	—	—	P5_3	P5_3
	P5_4	I/O	Port	P5_4	P5_4	P5_4	P5_4
	P5_5	I/O	Port	P5_5	P5_5	P5_5	P5_5
	P5_6	I/O	Port	P5_6	P5_6	P5_6	P5_6
	P5_7	I/O	Port	P5_7	P5_7	P5_7	P5_7
	P5_8	I/O	Port	P5_8	P5_8	P5_8	P5_8
	P5_9	I/O	Port	P5_9	P5_9	P5_9	P5_9
	P5_10	I/O	Port	P5_10	P5_10	P5_10	P5_10
	P5_11	I/O	Port	—	—	P5_11	P5_11
	P5_12	I/O	Port	—	—	P5_12	P5_12
	P5_13	I/O	Port	—	—	P5_13	P5_13
	P5_14	I/O	Port	P5_14	P5_14	P5_14	P5_14
	P5_15	I/O	Port	—	—	P5_15	P5_15

Note 1. Only available in devices with 2-MB flash memory.

Note 2. Only available in devices with 2- and 1-MB flash memories.

2.3 Port Functions

2.3.1 Features

Port Group

This product has the following numbers of port groups:

Table 2.3 RH850/P1x Port Group

Product	Number of Group	Name of Group
RH850/P1x	7	P0 to P5, JP0

Port Group Index n

Each port group is identified by its own index “n” (n = 0 to 5) throughout this section; e.g. PMCn for the port mode control register of the Pn pin.

Register Address

All port addresses are given as an offset from the individual base addresses, <JPORT0_base> and <PORT_base>.

Table 2.4 shows the base addresses, <JPORT0_base> and <PORT_base>.

Table 2.4 Port Base Address

Base address	Address
<PORT_base>	FFC1 0000_H
<JPORT0_base>	FFC2 0000_H

2.3.2 Overview

This product has various pins for input/output (I/O) functions, known as ports. The ports are organized in port groups.

This product also has several control registers to allocate the functions other than general I/O purpose to the corresponding pins.

For definitions of pin, port, and port group, see **Section 2.3.2.1, Terms**.

2.3.2.1 Terms

The terms descried in this section are defined as follows.

- Pin:
  Denotes a physical pin. Every pin is denoted by a unique pin number. Most of pins can be used in multiple modes. Thus the pin name indicating its own function is assigned to each pin depending on the selected mode.
- Port group:
  Denotes a group of ports.
- Port mode / Port:
  A pin in port mode functions as a general purpose I/O pin. It is then called port.
  The corresponding name is Pn_m. For example, P0_7 denotes the port 7 of port group 0 and it is referred to as port P0_7.
- Alternative mode:
  In alternative mode, a pin can be used for non-general purpose I/O functions as well; e.g. as the I/O pin of on-chip peripherals. Therefore, the corresponding pin name depends on the selected function. For example, the INTP0 pin denotes the pin for one of the external interrupt inputs.
  Note that two or more different names can refer to the same physical pin, e.g. for P0_2 and INTP0. Those different names indicate the function in which the pin is being operated.

2.3.2.2 Overview of Pin Functions

The pin can operate in the following three different modes:

- Port mode (PMCn.PMCn_m = 0)
  The pin operates as a general purpose I/O port in port mode.
  PMn.PMn_m selects input or output.
- S/W I/O control alternative mode (PMCn.PMCn_m = 1, PIPCn.PIPCn_m = 0)
  The pin is operated by an alternative function in S/W I/O control alternative mode.
  The selection between input and output is made by S/W via the PMn.PMn_m control bits.
- Direct I/O control alternative mode (PMCn.PMCn_m = 1, PIPCn.PIPCn_m = 1)
  The pin is operated by an alternative function in direct I/O control alternative mode.
  In contrast to S/W I/O control alternative mode, input/out is directly controlled by the alternative function in this mode.

Table 2.5 shows the outline of the register settings.

Table 2.5 Pin Function Configuration (Outline)

Mode	Bit				I/O
	PMCn_m	PMn_m	PIPCn_m	PIBCn_m	
Port mode	0	0	X	X	O
		1		1	I
S/W I/O control alternative mode	1	0	0	X	O
		1	0	0	I
Direct I/O control alternative mode		X	1	X	Controlled by the alternative function

- S/W I/O control alternative modes (PIPCn.PIPCn_m = 0):
  - Outputs (PMn_m = 0): Alternative output mode 1 to 6
  - Inputs (PMn_m = 1): Alternative input mode 1 to 6
- Direct I/O control alternative modes (PIPCn.PIPCn_m = 1):
  - Input/Output of alternative output mode 1 to 6 and alternative input mode 1 to 6 are directly controlled by the alternative function.

Table 2.6 Outline of Alternative Mode Selection (PMCn.PMCn_m = 1)

Function	Register				I/O
	PFCAE	PFCE	PFC	PM*1	
Alternative output mode 1 (ALT-OUT1)	0	0	0	0	O
Alternative input mode 1 (ALT-IN1)	0	0	0	1	I
Alternative output mode 2 (ALT-OUT2)	0	0	1	0	O
Alternative input mode 2 (ALT-IN2)	0	0	1	1	I
Alternative output mode 3 (ALT-OUT3)	0	1	0	0	O
Alternative input mode 3 (ALT-IN3)	0	1	0	1	I
Alternative output mode 4 (ALT-OUT4)	0	1	1	0	O
Alternative input mode 4 (ALT-IN4)	0	1	1	1	I
Alternative output mode 5 (ALT-OUT5)	1	0	0	0	O
Alternative input mode 5 (ALT-IN5)	1	0	0	1	I
Alternative output mode 6 (ALT-OUT6)	1	0	1	0	O
Alternative input mode 6 (ALT-IN6)	1	0	1	1	I

Note 1. When PIPCn.PIPCn_m = 1, the I/O direction is directly controlled by the peripheral (alternative) function and PM is ignored.

When a pin is operated in alternative mode (PMCn.PMCn_m = 1), one of several alternative functions can be selected by the PFCn, PFCEn, and PFCAEn registers.

2.3.2.3 Pin Data Input/Output

The registers used for data input and output are described below.

The source of the data to be read via the PPRn register depends on pin mode.

Output data

In port mode (PMCn.PMCn_m = 0), the value of Pn.Pn_m is output from the Pn_m pin.

Input data

A read operation of the PPRn register returns either the value of the Pn_m pin, the associated bit of the port register Pn.Pn_m, or the data output by an alternative function.

The source of the data read via PPRn depends on pin mode and setting of several control bits.

Table 2.7 summarizes the differences of PPRn read modes.

Table 2.7 PPRn_m Read Values

PMCn_m	PMn_m	PIBCn_m	PIPCn_m	PODCEn_m	PODCn_m	Mode	PPRn_m read value
0	1	0	X	X	X	Port input, input buffer disabled	Pn.Pn_m bit
		1		X	X	Port input, input buffer enabled	Pn_m pin
	0	X		0	0	Port push-pull output	Pn.Pn_m bit*1
				0	1	Port N-ch open-drain output	
				1	0	Port push-pull output	
				1	1	Port P-ch open-drain output	
1	1	0	0	X	X	S/W I/O control alternative input	Pn_m pin
		1				Setting prohibited	—
	0	X		0	0	S/W I/O control alternative push-pull output	Output signal from alternative mode*1
				0	1	S/W I/O control alternative N-ch open-drain output	
				1	0	S/W I/O control alternative push-pull output	
				1	1	S/W I/O control alternative P-ch open-drain output	
	X		1	0	0	Direct I/O control alternative input or push-pull output	I/O port in alternative mode: • Input: Pn_m pin • Output: Output signal from alternative mode*1
				0	1	Direct I/O control alternative input or N-ch open-drain output	
				1	0	Direct I/O control alternative input or push-pull output	
				1	1	Direct I/O control alternative input or P-ch open-drain output	

Note 1. When PBDCn.PBDCn_m = 1, Pn_m pin level is read via the PPRn.PPRn_m bit.

The control registers in **Table 2.7** have the following effects:

- PMCn.PMCn_m
  This bit selects either port mode (PMCn_m = 0) or alternative mode (PMCn_m = 1).
- PMn.PMn_m
  This bit selects input (PMn_m = 1) or output (PMn_m = 0) in port mode (PMCn_m = 0) and S/W I/O control alternative mode (PMCn_m = 1, PIPCn_m = 0).
- PIBCn.PIBCn_m
  This bit disables (PIBCn_m = 0) or enables (PIBCn_m = 1) the input buffer in input port mode (PMCn_m = 0 and PMn_m = 1). When the input buffer is disabled, PPRn_m reads the Pn.Pn_m bit, otherwise the Pn_m pin level is returned.
- PIPCn.PIPCn_m
  This bit selects either the S/W or direct I/O control alternative mode.
- PBDCn.PBDCn_m
  Setting this bit to 1 forces to read the Pn_m pin level via PPRn_m. Thus this enables a bidirectional mode, where the level of pin Pn_m can also be read back when the port is operated in an output mode.
- PODCn.PODCn_m and PODCEn.PODCEn_m bits
  These bits select push-pull output (PODCn_m bit = 0), N-ch open-drain output (PODCn_m bit = 1 and PODCEn_m bit = 0), or P-ch open-drain output (PODCn_m bit = 1 and PODCEn_m bit = 1).

Write to the Pn Register

The data to be output via port Pn_m in port mode (PMCn.PMCn_m = 0) is held in the port register Pn.

The Pn data can be rewritten in the following two different ways:

- Direct write to the Pn register
  New data can be directly written to the Pn register.
- Indirect operation to the Pn bit (set/reset/not)
  The indirect Pn operation is possible using the following two registers:
  - Port set/reset register: PSRn
    When the bit PSRn.PSRn_(m+16) = 1, the value of bit PSRn.PSRn_m determines the value of Pn.Pn_m.
    Thus Pn_m can be set/reset without a direct write to Pn.
  - Port NOT register: PNOTn
    Setting PNOTn.PNOTn_m = 1 inverts the bit Pn.Pn_m without a direct write to Pn_m. Additionally, reading the level of the output pin can read the inverted value of the value that was initially set.

The indirect Pn set/reset/not operation provides access to single bits (not limited to one bit) of the Pn register while leaving all other Pn bits untouched.

2.3.3 Port Type

Figure 2.3 shows the overall configuration of the pins. For the details of port blocks, see **Figure 2.4**.

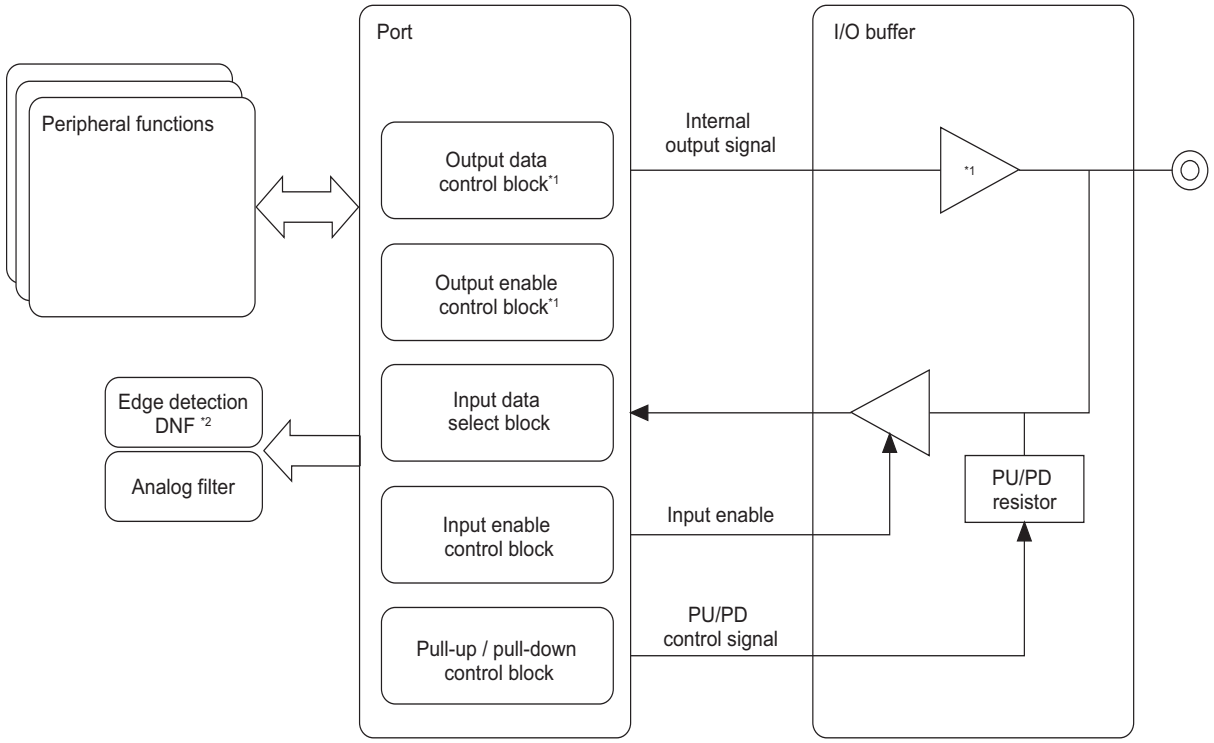

Note 1. Because analog input pins are only for input, they do not incorporate output-related functions.

Note 2. For details of the edge-detection DNF function and the relevant pins, see **Table 2.59, List of Input Pins with a Noise Filter**.

Figure 2.3 Block Diagram of Pin Configuration

Figure 2.4 shows the logical circuitry of the port control functions. The diagram is only a logical reference and does not show the real circuitry.

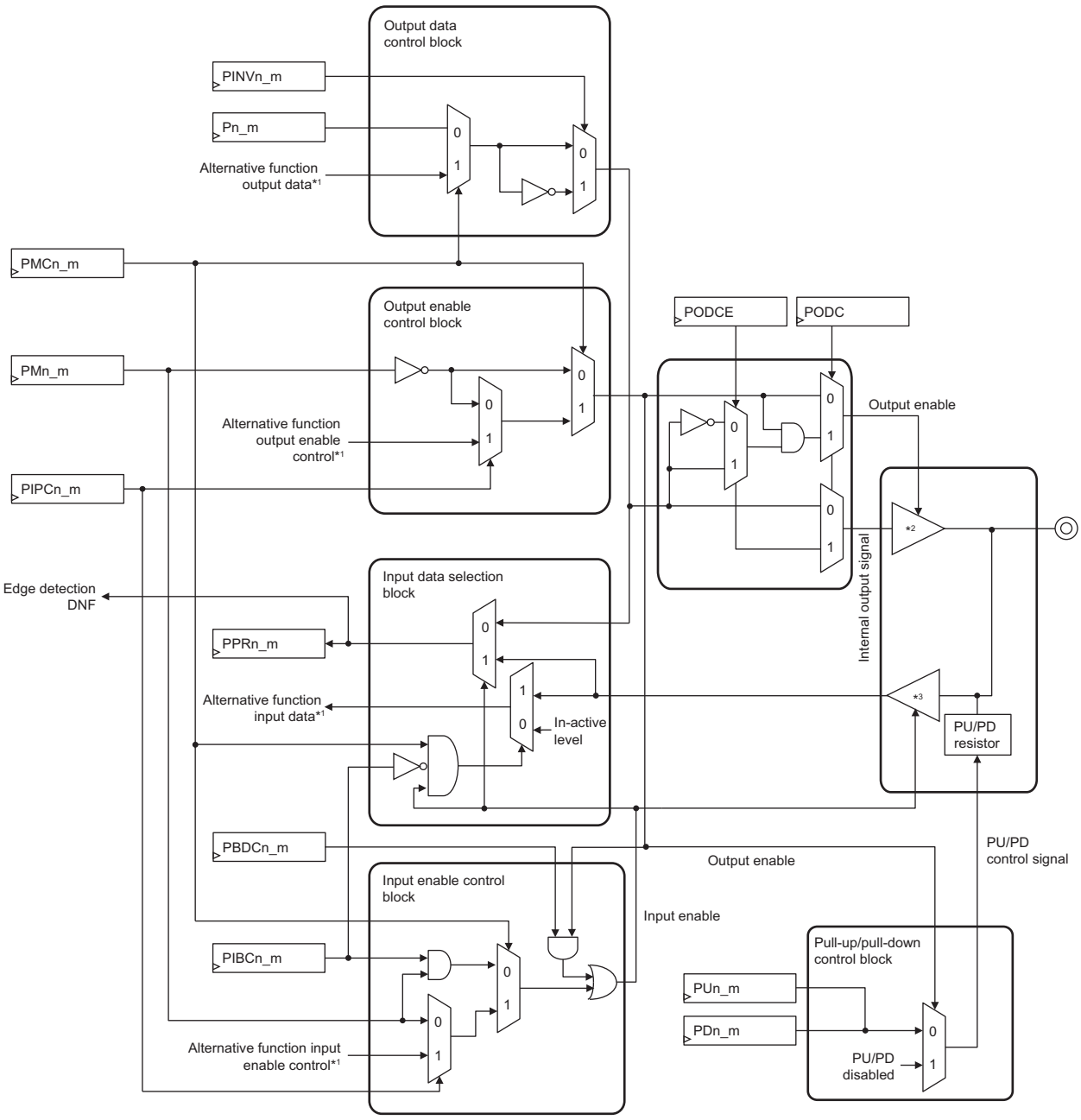

Note 1. This signal is for the alternative function selected by PFCn_m, PFCEn_m, and PFCAEn_m.

Note 2. The output driving ability is set by PDSCn_m and PUCCn_m.

Note 3. The type of the input buffer is set by PISAn.

Figure 2.4 Port Control Logic Diagram

2.3.4 Port Group Configuration Register

This section starts with an overview of all configuration registers and then presents all registers in detail. The configuration registers are classified as follows:

- **2.3.4.2 Pin Function Configuration**
- **2.3.4.3 Pin Data Input/Output**
- **2.3.4.4 Configuration of Electrical Characteristics**

2.3.4.1 Outline

The following registers are used for the configuration of the individual pins of the port groups:

Table 2.8 Registers for Port Group Configuration (1/2)

Register Name	Symbol	Address
Pin function setting		
Port control register	PCRn_m	<PORT_base> + 2000_H + n × 40_H + 4_H × m
	JPCR0_m	<JPORT0_base> + 2000_H + 4_H × m
Port mode control register	PMCn	<PORT_base> + 0014_H + n × 40_H
	JPMC0	<JPORT0_base> + 0014_H
Port mode control set/reset register	PMCSRn	<PORT_base> + 0024_H + n × 40_H
	JPMCSR0	<JPORT0_base> + 0024_H
Port IP control register	PIPCn	<PORT_base> + 4008_H + n × 40_H
Port mode register	PMn	<PORT_base> + 0010_H + n × 40_H
	JPM0	<JPORT0_base> + 0010_H
Port mode set/reset register	PMSRn	<PORT_base> + 0020_H + n × 40_H
	JPMSR0	<JPORT0_base> + 0020_H
Port input buffer control register	PIBCn	<PORT_base> + 4000_H + n × 40_H
	JPIBC0	<JPORT0_base> + 4000_H
Port function control register	PFCn	<PORT_base> + 0018_H + n × 40_H
Port function control expansion register	PFCEn	<PORT_base> + $001C_H$ + n × 40_H
	JPFCE0	<JPORT0_base> + $001C_H$
Port function control addition expansion register	PFCAEn	<PORT_base> + 0028_H + n × 40_H
Pin data input/output		
Port bi-direction control register	PBDCn	<PORT_base> + 4004_H + n × 40_H
	JPBDC0	<JPORT0_base> + 4004_H
Port pin read register	PPRn	<PORT_base> + $000C_H$ + n × 40_H
	JPPR0	<JPORT0_base> + $000C_H$
Port register	Pn	<PORT_base> + 0000_H + n × 40_H
	JP0	<JPORT0_base> + 0000_H
Port NOT register	PNOTn	<PORT_base> + 0008_H + n × 40_H
	JPNOT0	<JPORT0_base> + 0008_H
Port set/reset register	PSRn	<PORT_base> + 0004_H + n × 40_H
	JPSR0	<JPORT0_base> + 0004_H
Port output level inversion register	PINVn	<PORT_base> + 0030_H + n × 40_H

Table 2.8 Registers for Port Group Configuration (2/2)

Register Name	Symbol	Address
Specifying electrical characteristics		
Pull-up option register	PUn	<PORT_base> + $400C_H$ + n × 40_H
	JPU0	<JPORT0_base> + $400C_H$
Pull-down option register	PDn	<PORT_base> + 4010_H + n × 40_H
	JPD0	<JPORT0_base> + 4010_H
Port drive strength control register	PDSCn	<PORT_base> + 4018_H + n × 40_H
	JPDSC0	<JPORT0_base> + 4018_H
Port open-drain control register	PODCn	<PORT_base> + 4014_H + n × 40_H
	JPODC0	<JPORT0_base> + 4014_H
Port open-drain control expansion register	PODCEn	<PORT_base> + $403C_H$ + n × 40_H
Port universal control register	PUCCn	<PORT_base> + 4028_H + n × 40_H
	JPUCC0	<JPORT0_base> + 4028_H
Port input buffer selection register	PISAn	<PORT_base> + $402C_H$ + n × 40_H
	JPISA0	<JPORT0_base> + $402C_H$

Note: n: Port group number
m: Bit number in a port group

Base address

The PORTn base addresses, <PORT_Base> and <JPORT0_Base> are defined in Register Addresses, **Section 2.3.1, Features**.

Value after a reset

The value after a reset depends on the port, and are not described in the following register descriptions, but are given in **Section 2.4.1.1, List of Port Registers**.

2.3.4.2 Pin Function Configuration

(1) PMCn/JPMC0 — Port Mode Control Register

This register specifies whether the individual pins of port group n are in port mode or in alternative mode.

Access: PMCn: This register can be read/written in 16-bit units.
JPMC0: This register can be read/written in 8-bit units.

Address: PMCn: <PORT_base> + 0014_H + n × 40_H
JPMC0: <JPORT0_base> + 0014_H **Note 1**

Value after reset: PMCn: 0000_H
JPMC0: 00_H

Note 1. The number of valid bit positions (the value m) depends on the number of pins included in each device. See the list of registers by group (**Table 2.36, List of Registers in Port Group 0**, **Table 2.37, List of Registers in Port Group 1**, **Table 2.38, List of Registers in Port Group 2**, **Table 2.39, List of Registers in Port Group 3**, **Table 2.40, List of Registers in Port Group 4**,**Table 2.41, List of Registers in Port Group 5**, **Table 2.42, List of Registers in Port Group JP0**) in **Section 2.4.1.1, List of Port Registers**.

Bit	15	14	13	12	11	10	9	8	7	6	5	4	3	2	1	0
	PMCn_15	PMCn_14	PMCn_13	PMCn_12	PMCn_11	PMCn_10	PMCn_9	PMCn_8	PMCn_7	PMCn_6	PMCn_5	PMCn_4	PMCn_3	PMCn_2	PMCn_1	PMCn_0
Value after reset	0	0	0	0	0	0	0	0	0	0	0	0	0	0	0	0
R/W	R/W	R/W	R/W	R/W	R/W	R/W	R/W	R/W	R/W	R/W	R/W	R/W	R/W	R/W	R/W	R/W

Table 2.9 PMCn Register Contents

Bit Position	Bit Name	Function
15 to 0	PMCn_[15:0]	Specifies the operation mode of the corresponding pin. 0: Port mode 1: Alternative mode

CAUTIONS

1. The I/O control is not performed by just setting alternative mode (PMCn.PMCn_m). When the alternative function performs direct I/O control, set also the PIPCn.PIPCn_m bit to 1.
2. When a port is used as an input pin in alternative mode, there is a pin that passes a noise filter. Such a pin might need FCLA0CTLm.DFNAnCTL and the DNFAnEN register to be set. For details, see **Section 2.6, Noise Filter and Edge Level Detection Circuit**.

NOTES

1. The control bits of the JTAG port mode control register (JPMC0) are JPMC0_[7:0].
2. For details about the relevant port groups and bits, see **Section 2.4.1.1, List of Port Registers**.

(2) PMCSRn/JPMCSR0 — Port Mode Control Set/Reset Register

This register provides an alternative method to write data to a bit in the PMCn register.

The upper 16 bits of PMCSRn specify whether the data of the corresponding lower 16 bits of PMCSRn is written to the PMCn.PMCn_m bit.

Access: This register can be read/written in 32-bit units.
PMCSR: Bits 31 to 16 are always read as 0000_H. Reading bits 15 to 0 returns the value of the PMCn register.
JPMCSR: Bits 31 to 8 are always read as $0000\ 00_H$. Reading bits 7 to 0 returns the value of the JPMCn register.

Address: PMCSRn: <PORT_base> + 0024_H + n × 40_H
JPMCSR0: <JPORT0_base> + 0024_H **Note 1**

Value after reset: $0000\ 0000_H$

Note 1. The number of valid bit positions (the value m) depends on the number of pins included in each device. See the list of registers by group (**Table 2.36, List of Registers in Port Group 0**, **Table 2.37, List of Registers in Port Group 1**, **Table 2.38, List of Registers in Port Group 2**, **Table 2.39, List of Registers in Port Group 3**, **Table 2.40, List of Registers in Port Group 4**,**Table 2.41, List of Registers in Port Group 5**, **Table 2.42, List of Registers in Port Group JP0**) in **Section 2.4.1.1, List of Port Registers**.

Bit	31	30	29	28	27	26	25	24	23	22	21	20	19	18	17	16
	PMCSRn_31	PMCSRn_30	PMCSRn_29	PMCSRn_28	PMCSRn_27	PMCSRn_26	PMCSRn_25	PMCSRn_24	PMCSRn_23	PMCSRn_22	PMCSRn_21	PMCSRn_20	PMCSRn_19	PMCSRn_18	PMCSRn_17	PMCSRn_16
Value after reset	0	0	0	0	0	0	0	0	0	0	0	0	0	0	0	0
R/W	R/W	R/W	R/W	R/W	R/W	R/W	R/W	R/W	R/W	R/W	R/W	R/W	R/W	R/W	R/W	R/W

Bit	15	14	13	12	11	10	9	8	7	6	5	4	3	2	1	0
	PMCSRn_15	PMCSRn_14	PMCSRn_13	PMCSRn_12	PMCSRn_11	PMCSRn_10	PMCSRn_9	PMCSRn_8	PMCSRn_7	PMCSRn_6	PMCSRn_5	PMCSRn_4	PMCSRn_3	PMCSRn_2	PMCSRn_1	PMCSRn_0
Value after reset	0	0	0	0	0	0	0	0	0	0	0	0	0	0	0	0
R/W	R/W	R/W	R/W	R/W	R/W	R/W	R/W	R/W	R/W	R/W	R/W	R/W	R/W	R/W	R/W	R/W

Table 2.10 PMCSRn Register Contents

Bit Position	Bit Name	Function
31 to 16	PMCSRn_ [31:16]	Specifies whether the value of the corresponding lower bit of PMCSRn_[15:0] is written to PMCn_m: 0: PMCn_m does not depend on PMCSRn_m. 1: The value of PMCn_m is the same as that of PMCSRn_m. Example: When PMCSRn.PMCSRn_31 = 1, the value of bit PMCSRn.PMCSRn_15 is written to bit PMCn.PMCn_15 and output.
15 to 0	PMCSRn_ [15:0]	Specifies the PMCn_m value when the corresponding upper bit PMCSRn_(m+16) is 1: 0: PMCn_m = 0 1: PMCn_m = 1

NOTES

1. The control bits of the JTAG port mode control set/reset register (JPMCSR0) are JPMCSR0_[31:0].
2. For details about the relevant port groups and bits, see **Section 2.4.1.1, List of Port Registers**.

(3) PIPCn — Port IP Control Register

This register specifies whether the I/O direction of pin Pn_m is controlled by the port mode register PMn.PMn_m or by an alternative function.

When the Pn_m pin is operated in alternative mode (PMCn.PMCn_m = 1) and the alternative function directly controls the I/O direction of Pn_m, PIPCn.PIPCn_m must be set to 1 as well.

This hands over I/O control to the alternative function and overrules the PMn.PMn_m setting.

Access: This register can be read/written in 16-bit units.

Address: PIPCn: <PORT_base> + 4008_H + n × 40_H **Note 1**

Value after reset: 0000_H

Note 1. The number of valid bit positions (the value m) depends on the number of pins included in each device. See the list of registers by group (**Table 2.36, List of Registers in Port Group 0**, **Table 2.37, List of Registers in Port Group 1**, **Table 2.38, List of Registers in Port Group 2**, **Table 2.39, List of Registers in Port Group 3**, **Table 2.40, List of Registers in Port Group 4**,**Table 2.41, List of Registers in Port Group 5**) in **Section 2.4.1.1, List of Port Registers**.

Bit	15	14	13	12	11	10	9	8	7	6	5	4	3	2	1	0
	PIPCn_15	PIPCn_14	PIPCn_13	PIPCn_12	PIPCn_11	PIPCn_10	PIPCn_9	PIPCn_8	PIPCn_7	PIPCn_6	PIPCn_5	PIPCn_4	PIPCn_3	PIPCn_2	PIPCn_1	PIPCn_0
Value after reset	0	0	0	0	0	0	0	0	0	0	0	0	0	0	0	0
R/W	R/W	R/W	R/W	R/W	R/W	R/W	R/W	R/W	R/W	R/W	R/W	R/W	R/W	R/W	R/W	R/W

Table 2.11 PIPCn Register Contents

Bit Position	Bit Name	Function
15 to 0	PIPCn_[15:0]	Specifies the I/O mode. 0: I/O mode is selected by PMn.PMn_m (software I/O control). 1: I/O mode is selected by the peripheral function (direct I/O control).

NOTE

For details about the relevant port groups and bits, see **Section 2.4.1.1, List of Port Registers**.

(4) PMn/JPM0 — Port Mode Register

The PMn register specifies whether the individual pins of port group n are in input mode or in output mode.

Access: PMn: This register can be read/written in 16-bit units.
JPM0: This register can be read/written in 8-bit units.

Address: PMn: <PORT_base> + 0010_H + n × 40_H
JPM0: <JPORT0_base> + 0010_H **Note 1**

Value after reset: PM0: $FBFF_H$, PM1 to 5: $FFFF_H$
JPM0: FF_H

Note 1. The number of valid bit positions (the value m) depends on the number of pins included in each device. See the list of registers by group (**Table 2.36, List of Registers in Port Group 0**, **Table 2.37, List of Registers in Port Group 1**, **Table 2.38, List of Registers in Port Group 2**, **Table 2.39, List of Registers in Port Group 3**, **Table 2.40, List of Registers in Port Group 4**,**Table 2.41, List of Registers in Port Group 5**, **Table 2.42, List of Registers in Port Group JP0**) in **Section 2.4.1.1, List of Port Registers**.

Bit	15	14	13	12	11	10	9	8	7	6	5	4	3	2	1	0
	PMn_15	PMn_14	PMn_13	PMn_12	PMn_11	PMn_10	PMn_9	PMn_8	PMn_7	PMn_6	PMn_5	PMn_4	PMn_3	PMn_2	PMn_1	PMn_0
Value after reset	1	1	1	1	1	*1	1	1	1	1	1	1	1	1	1	1
R/W	R/W	R/W	R/W	R/W	R/W	R/W	R/W	R/W	R/W	R/W	R/W	R/W	R/W	R/W	R/W	R/W

Note 1. PM0: 0
PM1 to PM5: 1

Table 2.12 PMn Register Contents

Bit Position	Bit Name	Function
15 to 0	PMn_[15:0]	Specifies input/output mode of the corresponding pin. 0: Output mode (output enabled) 1: Input mode (output disabled)

NOTES

1. To input pin level, the input buffer needs to be enabled (PIBCn.PIBCn_m = 1).
2. After reset, PIPCn.PIPCn_m = 0 is set (I/O mode is controlled with PMn.PMn_m). Thus, PMn_m specifies the I/O direction of port mode (PMCn.PMCn_m = 0) and alternative mode (PMCn.PMCn_m = 1).
3. The control bits of the JTAG port mode register (JPM0) are JPM0_[7:0].
4. For details about the relevant port groups and bits, see **Section 2.4.1.1, List of Port Registers**.

(5) PMSRn/JPMSR0 — Port Mode Set/Reset Register n

This register provides an alternative method to write data to a bit in the PMn register.

The upper 16 bits of PMSRn specify whether the data of the corresponding lower 16 bits of PMSRn is written to the PMn.PMn_m bit.

Access: This register can be read/written in 32-bit units.
PMSRn: Bits 31 to 16 are always read as 0000_H. Reading bits 15 to 0 returns the value of the PMn register.
JPMSRn: Bits 31 to 8 are always read as $0000\ 00_H$. Reading bits 7 to 0 returns the value of the JPMn register.

Address: PMSRn: <PORT_base> + 0020_H + n × 40_H
JPMSR0: <JPORT0_base> + 0020_H **Note 1**

Value after reset: PMSR0: $0000\ FBFF_H$, PMSR1 to 5: $0000\ FFFF_H$
JPMSR0: $0000\ 00FF_H$

Note 1. The number of valid bit positions (the value m) depends on the number of pins included in each device. See the list of registers by group (**Table 2.36, List of Registers in Port Group 0**, **Table 2.37, List of Registers in Port Group 1**, **Table 2.38, List of Registers in Port Group 2**, **Table 2.39, List of Registers in Port Group 3**, **Table 2.40, List of Registers in Port Group 4**,**Table 2.41, List of Registers in Port Group 5**, **Table 2.42, List of Registers in Port Group JP0**) in **Section 2.4.1.1, List of Port Registers**.

Bit	31	30	29	28	27	26	25	24	23	22	21	20	19	18	17	16
	PMSRn_31	PMSRn_30	PMSRn_29	PMSRn_28	PMSRn_27	PMSRn_26	PMSRn_25	PMSRn_24	PMSRn_23	PMSRn_22	PMSRn_21	PMSRn_20	PMSRn_19	PMSRn_18	PMSRn_17	PMSRn_16
Value after reset	0	0	0	0	0	0	0	0	0	0	0	0	0	0	0	0
R/W	R/W	R/W	R/W	R/W	R/W	R/W	R/W	R/W	R/W	R/W	R/W	R/W	R/W	R/W	R/W	R/W

Bit	15	14	13	12	11	10	9	8	7	6	5	4	3	2	1	0
	PMSRn_15	PMSRn_14	PMSRn_13	PMSRn_12	PMSRn_11	PMSRn_10	PMSRn_9	PMSRn_8	PMSRn_7	PMSRn_6	PMSRn_5	PMSRn_4	PMSRn_3	PMSRn_2	PMSRn_1	PMSRn_0
Value after reset	*1	*1	*1	*1	*1	*2	*1	*1	1	1	1	1	1	1	1	1
R/W	R/W	R/W	R/W	R/W	R/W	R/W	R/W	R/W	R/W	R/W	R/W	R/W	R/W	R/W	R/W	R/W

Note 1. PMSR0 to PMSR5: 1
JPMSR0: 0

Note 2. PMSR1 to PMSR5: 1
PMSR0, JPMSR0: 0

Table 2.13 PMSRn Register Contents

Bit Position	Bit Name	Function
31 to 16	PMSRn_[31:16]	Specifies whether the value of the corresponding lower bit of PMSRn_[15:0] is written to PMn_m: 0: PMn_m does not depend on PMSRn_m. 1: The value of PMn_m is the same as that of PMSRn_m. Example: When PMSRn.PMSRn_31 = 1, the value of bit PMSRn.PMSRn_15 is written to bit PMn.PMn_15 and output.
15 to 0	PMSRn_[15:0]	Specifies the PMn_m value when the corresponding upper bit PMSRn_(m+16) is 1: 0: PMn_m = 0 1: PMn_m = 1

NOTES

1. The control bits of the JTAG port mode set/reset register (JPMSR0) are JPMSR0_[31:0]
2. For details about the relevant port groups and bits, see **Section 2.4.1.1, List of Port Registers**.

(6) PIBCn/JPIBC0 — Port Input Buffer Control Register

This register enables and disables the input buffer in input port mode (PMCn.PMCn_m = 0 and PMn.PMn_m = 1).

Additionally, when pins are in bidirectional mode (PBDCn.PBDCn_m = 1), it is capable of selecting shared output level loop-back function and pin output level-read function with the setting of PIBCn.PIBCn_m. For details, see **(1) PBDCn/JPBDC0 — Port Bi-Direction Control Register** in **Section 2.3.4.3, Pin Data Input/Output**.

Access: PIBCn: This register can be read/written in 16-bit units.
JPIBC0: This register can be read/written in 8-bit units.

Address: PIBCn: <PORT_base> + 4000_H + n × 40_H
JPIBC0: <JPORT0_base> + 4000_H **Note 1**

Value after reset: PIBCn: 0000_H
JPIBC0: 00_H

Note 1. The number of valid bit positions (the value m) depends on the number of pins included in each device. See the list of registers by group (**Table 2.36, List of Registers in Port Group 0**, **Table 2.37, List of Registers in Port Group 1**, **Table 2.38, List of Registers in Port Group 2**, **Table 2.39, List of Registers in Port Group 3**, **Table 2.40, List of Registers in Port Group 4**,**Table 2.41, List of Registers in Port Group 5**, **Table 2.42, List of Registers in Port Group JP0**) in **Section 2.4.1.1, List of Port Registers**.

Bit	15	14	13	12	11	10	9	8	7	6	5	4	3	2	1	0
	PIBCn_15	PIBCn_14	PIBCn_13	PIBCn_12	PIBCn_11	PIBCn_10	PIBCn_9	PIBCn_8	PIBCn_7	PIBCn_6	PIBCn_5	PIBCn_4	PIBCn_3	PIBCn_2	PIBCn_1	PIBCn_0
Value after reset	0	0	0	0	0	0	0	0	0	0	0	0	0	0	0	0
R/W	R/W	R/W	R/W	R/W	R/W	R/W	R/W	R/W	R/W	R/W	R/W	R/W	R/W	R/W	R/W	R/W

Table 2.14 PIBCn Register Contents

Bit Position	Bit Name	Function
15 to 0	PIBCn_[15:0]	Enables/disables the input buffer: 0: Input buffer is disabled. 1: Input buffer is enabled.

NOTES

1. When the input buffer is disabled, it does not consume flow-through current even if the pin level is in Hi-Z state. Thus, the pin does not need to be fixed to a high or low level externally.
2. The control bits of the JTAG port input buffer control register (JPIBC0) are JPIBC0_[7:0].
3. For details about the relevant port groups and bits, see **Section 2.4.1.1, List of Port Registers**.

(7) PFCn — Port Function Control Register

This register, together with the PFCEn and PFCAEn registers, specifies an alternative function of the pins.

Some alternative functions require direct I/O control of pin Pn_m. For such alternative functions PIPCn.PIPCn_m must be set to 1 as well.

For other alternative functions, input/output must be specified by PMn.PMn_m.

Access: This register can be read/written in 16-bit units.

Address: <PORT_base> + 0018_H + n × 40_H **Note 1**

Value after reset: 0000_H

Note 1. The number of valid bit positions (the value m) depends on the number of pins included in each device. See the list of registers by group (**Table 2.36, List of Registers in Port Group 0**, **Table 2.37, List of Registers in Port Group 1**, **Table 2.38, List of Registers in Port Group 2**, **Table 2.39, List of Registers in Port Group 3**, **Table 2.40, List of Registers in Port Group 4**,**Table 2.41, List of Registers in Port Group 5**) in **Section 2.4.1.1, List of Port Registers**.

Bit	15	14	13	12	11	10	9	8	7	6	5	4	3	2	1	0
	PFCn_15	PFCn_14	PFCn_13	PFCn_12	PFCn_11	PFCn_10	PFCn_9	PFCn_8	PFCn_7	PFCn_6	PFCn_5	PFCn_4	PFCn_3	PFCn_2	PFCn_1	PFCn_0
Value after reset	0	0	0	0	0	0	0	0	0	0	0	0	0	0	0	0
R/W	R/W	R/W	R/W	R/W	R/W	R/W	R/W	R/W	R/W	R/W	R/W	R/W	R/W	R/W	R/W	R/W

Table 2.15 PFCn Register Contents

Bit Position	Bit Name	Function
15 to 0	PFCn_[15:0]	Specifies an alternative function of a pin. See **Table 2.6, Outline of Alternative Mode Selection (PMCn.PMCn_m = 1)**.

NOTE

For details about the relevant port groups and bits, see **Section 2.4.1.1, List of Port Registers**.

(8) PFCEn / JPFCE0 — Port Function Control Expansion Register

This register, together with the PFCn and PFCAEn registers, specifies an alternative function of the pins.

Some alternative functions directly controls input/output of pin Pn_m. For such alternative functions PIPCn.PIPCn_m must be set to 1 as well.

For other alternative functions, input/output must be specified by PMn.PMn_m.

Access: PFCEn: This register can be read/written in 16-bit units.
JPFCE0: This register can be read/written in 8-bit units.

Address: PFCEn: <PORT_base> + $001C_H$ + n × 40_H
JPFCE0: <JPORT0_base> + $001C_H$ **Note 1**

Value after reset: PFCEn: 0000_H
JPFCE0: 00_H

Note 1. The number of valid bit positions (the value m) depends on the number of pins included in each device. See the list of registers by group (**Table 2.36, List of Registers in Port Group 0**, **Table 2.37, List of Registers in Port Group 1**, **Table 2.38, List of Registers in Port Group 2**, **Table 2.39, List of Registers in Port Group 3**, **Table 2.40, List of Registers in Port Group 4**,**Table 2.41, List of Registers in Port Group 5**, **Table 2.42, List of Registers in Port Group JP0**) in **Section 2.4.1.1, List of Port Registers**.

Bit	15	14	13	12	11	10	9	8	7	6	5	4	3	2	1	0
	PFCEn_15	PFCEn_14	PFCEn_13	PFCEn_12	PFCEn 11	PFCEn_10	PFCEn_9	PFCEn_8	PFCEn_7	PFCEn_6	PFCEn_5	PFCEn_4	PFCEn_3	PFCEn_2	PFCEn_1	PFCEn_0
Value after reset	0	0	0	0	0	0	0	0	0	0	0	0	0	0	0	0
R/W	R/W	R/W	R/W	R/W	R/W	R/W	R/W	R/W	R/W	R/W	R/W	R/W	R/W	R/W	R/W	R/W

Table 2.16 PFCEn Register Contents

Bit Position	Bit Name	Function
15 to 0	PFCEn_[15:0]	Specifies an alternative function of a pin. See **Table 2.6, Outline of Alternative Mode Selection (PMCn.PMCn_m = 1)** for details.

NOTES

1. The control bits of the JTAG port function control expansion register (JPFCE0) are JPFCE0_[7:0].
2. For details about the relevant port groups and bits, see **Section 2.4.1.1, List of Port Registers**.

(9) PFCAEn — Port Function Control Additional Expansion Register

This register, together with the PFCn and PFCEn registers, specifies an alternative function of the pins.

Some alternative functions directly controls input/output of pin Pn_m. For such an alternative functions PIPCn.PIPCn_m must be set to 1 as well. For other alternative functions, input/output must be specified by PMn.PMn_m.

Access: This register can be read/written in 16-bit units.

Address: <PORT_base> + 0028_H + n × 40_H **Note 1**

Value after reset: 0000_H

Note 1. The number of valid bit positions (the value m) depends on the number of pins included in each device. See the list of registers by group (**Table 2.36, List of Registers in Port Group 0**, **Table 2.37, List of Registers in Port Group 1**, **Table 2.38, List of Registers in Port Group 2**, **Table 2.39, List of Registers in Port Group 3**, **Table 2.40, List of Registers in Port Group 4**,**Table 2.41, List of Registers in Port Group 5**) in **Section 2.4.1.1, List of Port Registers**.

Bit	15	14	13	12	11	10	9	8	7	6	5	4	3	2	1	0
	PFCAEn_15	PFCAEn_14	PFCAEn_13	PFCAEn_12	PFCAEn_11	PFCAEn_10	PFCAEn_9	PFCAEn_8	PFCAEn_7	PFCAEn_6	PFCAEn_5	PFCAEn_4	PFCAEn_3	PFCAEn_2	PFCAEn_1	PFCAEn_0
Value after reset	0	0	0	0	0	0	0	0	0	0	0	0	0	0	0	0
R/W	R/W	R/W	R/W	R/W	R/W	R/W	R/W	R/W	R/W	R/W	R/W	R/W	R/W	R/W	R/W	R/W

Table 2.17 PFCAEn Register Contents

Bit Position	Bit Name	Function
15 to 0	PFCAEn_[15:0]	Specifies an alternative function of a pin. See **Table 2.6, Outline of Alternative Mode Selection (PMCn.PMCn_m = 1)** for details.

Table 2.18 Setting Alternative Functions

PFCAEn_m	PFCEn_m	PFCn_m	PMn_m	Function
0	0	0	1	Alternative input mode 1
			0	Alternative output mode 1
		1	1	Alternative input mode 2
			0	Alternative output mode 2
	1	0	1	Alternative input mode 3
			0	Alternative output mode 3
		1	1	Alternative input mode 4
			0	Alternative output mode 4
1	0	0	1	Alternative input mode 5
			0	Alternative output mode 5
		1	1	Alternative input mode 6
			0	Alternative output mode 6
	1	X	X	Setting prohibited

CAUTION

- After selecting the alternative function by the PFCn_m, PFCEn_m or PFCAEn_m bit, set PMCn_m to 1.
- With this product, the I/O of some functions is multiplexed in two pins, but only either one can be used as a pin function. Setting the same pin function in two pins is prohibited.
  For example, if the a/b/c pin is used as b, the b/d/e pin cannot be used as b. In this case, the b/d/e pin must be configured as the pin function other than b.

NOTE

For details about the relevant port groups and bits, see **Section 2.4.1.1, List of Port Registers**.

2.3.4.3 Pin Data Input/Output

(1) PBDCn/JPBDC0 — Port Bi-Direction Control Register

This register enables the input buffer when a port is used in output mode and sets in bi-direction mode. In bi-direction mode, PPRn.PPRn_m can read the level of the Pn_m pin.

- Alternative output level loopback function
  When the Pn_m pin is used as the alternative output function, the actual pin output level based on the alternative output function can be looped back to the alternative input side by setting PBDCn.PBDCn_m = 1 and PIBCn.PIBCn_m= 0. For example, the pin output level based on the first alternative function can be looped back to the same alternative input side. Also the pin output level can be read via PPRn.PPRn_m.

- Pin output level read function
  When the Pn_m pin is used as the general output port function or the alternative output function, the actual pin output level can be read via PPRn.PPRn_m by setting PBDCn.PBDCn_m = 1 and PIBCn.PIBCn_m = 1. Under this setting, the pin output level will never be looped back to the alternative input side even in alternative output mode.

Access: PBDCn: This register can be read/written in 16-bit units.
JPBDC0: This register can be read/written in 8-bit units.

Address: PBDCn: <PORT_base> + 4004_H + n × 40_H
JPBDC0: <JPORT0_base> + 4004_H **Note 1**

Value after reset: PBDCn: 0000_H
JPBDC0: 00_H

Note 1. The number of valid bit positions (the value m) depends on the number of pins included in each device. See the list of registers by group (**Table 2.36, List of Registers in Port Group 0**, **Table 2.37, List of Registers in Port Group 1**, **Table 2.38, List of Registers in Port Group 2**, **Table 2.39, List of Registers in Port Group 3**, **Table 2.40, List of Registers in Port Group 4**,**Table 2.41, List of Registers in Port Group 5**, **Table 2.42, List of Registers in Port Group JP0**) in **Section 2.4.1.1, List of Port Registers**.

Bit	15	14	13	12	11	10	9	8	7	6	5	4	3	2	1	0
	PBDCn_15	PBDCn_14	PBDCn_13	PBDCn_12	PBDCn_11	PBDCn_10	PBDCn_9	PBDCn_8	PBDCn_7	PBDCn_6	PBDCn_5	PBDCn_4	PBDCn_3	PBDCn_2	PBDCn_1	PBDCn_0
Value after reset	0	0	0	0	0	0	0	0	0	0	0	0	0	0	0	0
R/W	R/W	R/W	R/W	R/W	R/W	R/W	R/W	R/W	R/W	R/W	R/W	R/W	R/W	R/W	R/W	R/W

Table 2.19 PBDCn Register Contents

Bit Position	Bit Name	Function
15 to 0	PBDCn_[15:0]	Enables/disables bi-direction mode of the corresponding pin. 0: Bi-direction mode disabled 1: Bi-direction mode enabled

CAUTION

When the Pn_m port is used as an alternative output function (PMCn.PMCn_m = 1, PMn.PMn_m = 0), if bidirectional mode is enabled (PBDCn.PBDCn_m = 1), the level of the Pn_m pin can be read with PPRn.PPRn_m.

However, the output of the alternative output function is input to the alternative input function of the same pin (the alternative input function that is set with PFCn.PFCn_m, PFCEn.PFCEn_m, and PFCAEn.PFCAEn_m). If this alternative input function is used in another pin, note that the output of the alternative output function and alternative input in other pins are input internally (OR input).

NOTES

1. The control bits of the JTAG port bi-direction control register (JPBDC0) are JPBDC0_[7:0].
2. For details about the relevant port groups and bits, see **Section 2.4.1.1, List of Port Registers**.

(2) PPRn/JPPR0 — Port Pin Read Register

This register reflects an actual Pn_m pin level, a Pn.Pn_m bit value, or an output level of the alternative function. The value to be read depends on various control settings as described in **Table 2.7, PPRn_m Read Values**.

Access: PPRn: This register can be read only in 16-bit units.
JPPR0: This register can only be read in 8-bit units.

Address: PPRn: <PORT_base> + $000C_H$ + n × 40_H
JPPR0: <JPORT0_base> + $000C_H$ **Note 1**

Value after reset: PPRn: 0000_H
JPPR0: 00_H

Note 1. The number of valid bit positions (the value m) depends on the number of pins included in each device. See the list of registers by group (**Table 2.36, List of Registers in Port Group 0**, **Table 2.37, List of Registers in Port Group 1**, **Table 2.38, List of Registers in Port Group 2**, **Table 2.39, List of Registers in Port Group 3**, **Table 2.40, List of Registers in Port Group 4**,**Table 2.41, List of Registers in Port Group 5**, **Table 2.42, List of Registers in Port Group JP0**) in **Section 2.4.1.1, List of Port Registers**.

Bit	15	14	13	12	11	10	9	8	7	6	5	4	3	2	1	0
	PPRn_15	PPRn_14	PPRn_13	PPRn_12	PPRn_11	PPRn_10	PPRn_9	PPRn_8	PPRn_7	PPRn_6	PPRn_5	PPRn_4	PPRn_3	PPRn_2	PPRn_1	PPRn_0
Value after reset	0	0	0	0	0	0	0	0	0	0	0	0	0	0	0	0
R/W	R	R	R	R	R	R	R	R	R	R	R	R	R	R	R	R

Table 2.20 PPRn Register Contents

Bit Position	Bit Name	Function
15 to 0	PPRn_[15:0]	Pin Pn_m, Pn.Pn_m value or alternative function output.

NOTES

1. For details about the read value of the PPRn register, see **Section 2.3.2.3, Pin Data Input/ Output**.
2. The control bits of the JTAG port pin read register (JPPR0) are JPPR0_[7:0].
3. For details about the relevant port groups and bits, see **Section 2.4.1.1, List of Port Registers**.

(3) Pn/JP0 — Port Register

This register sets and holds the Pn.Pn_m data to be output via the related Pn_m port in output port mode (PMCn.PMCn_m = 0 and PMn.PMn_m = 0).

Access: Pn: This register can be read/written in 16-bit units.
JP0: This register can be read/written in 8-bit units.

Address: Pn: <PORT_base> + 0000_H + n × 40_H
JP0: <JPORT0_base> + 0000_H **Note 1**

Value after reset: Pn: 0000_H
JP0: 00_H

Note 1. The number of valid bit positions (the value m) depends on the number of pins included in each device. See the list of registers by group (**Table 2.36, List of Registers in Port Group 0**, **Table 2.37, List of Registers in Port Group 1**, **Table 2.38, List of Registers in Port Group 2**, **Table 2.39, List of Registers in Port Group 3**, **Table 2.40, List of Registers in Port Group 4**,**Table 2.41, List of Registers in Port Group 5**, **Table 2.42, List of Registers in Port Group JP0**) in **Section 2.4.1.1, List of Port Registers**.

Bit	15	14	13	12	11	10	9	8	7	6	5	4	3	2	1	0
	Pn_15	Pn_14	Pn_13	Pn_12	Pn_11	Pn_10	Pn_9	Pn_8	Pn_7	Pn_6	Pn_5	Pn_4	Pn_3	Pn_2	Pn_1	Pn_0
Value after reset	0	0	0	0	0	0	0	0	0	0	0	0	0	0	0	0
R/W	R/W	R/W	R/W	R/W	R/W	R/W	R/W	R/W	R/W	R/W	R/W	R/W	R/W	R/W	R/W	R/W

Table 2.21 Pn Register Contents

Bit Position	Bit Name	Function
15 to 0	Pn_[15:0]	Sets the output level of pin m (m = 0 to 15): 0: Low level output 1: High level output

NOTE

- The bits of this register can be manipulated by various means; refer to the subsection, **Write to the Pn Register** in **Section 2.3.2.3, Pin Data Input/Output**.
- The control bits of the JTAG port register (JP0) are JP0_[7:0].
- For details about the relevant port groups and bits, see **Section 2.4.1.1, List of Port Registers**.

(4) PNOTn/JPNOT0 — Port NOT Register

This register enables inverting the Pn_m bit of the port register without directly writing to Pn.

Access: PNOTn: This register can be written in 16-bit units. The read value is always 0000_H.
JPNOT0: This register can only be written in 8-bit units. The read value is always 00_H.

Address: PNOTn: <PORT_base> + 0008_H + n × 40_H
JPNOT0: <JPORT0_base> + 0008_H **Note 1**

Value after reset: PNOTn: 0000_H
JPNOT0: 00_H

Note 1. The number of valid bit positions (the value m) depends on the number of pins included in each device. See the list of registers by group (**Table 2.36, List of Registers in Port Group 0**, **Table 2.37, List of Registers in Port Group 1**, **Table 2.38, List of Registers in Port Group 2**, **Table 2.39, List of Registers in Port Group 3**, **Table 2.40, List of Registers in Port Group 4**,**Table 2.41, List of Registers in Port Group 5**, **Table 2.42, List of Registers in Port Group JP0**) in **Section 2.4.1.1, List of Port Registers**.

Bit	15	14	13	12	11	10	9	8	7	6	5	4	3	2	1	0
	PNOTn_15	PNOTn_14	PNOTn_13	PNOTn_12	PNOTn_11	PNOTn_10	PNOTn_9	PNOTn_8	PNOTn_7	PNOTn_6	PNOTn_5	PNOTn_4	PNOTn_3	PNOTn_2	PNOTn_1	PNOTn_0
Value after reset	0	0	0	0	0	0	0	0	0	0	0	0	0	0	0	0
R/W	W	W	W	W	W	W	W	W	W	W	W	W	W	W	W	W

Table 2.22 PNOTn Register Contents

Bit Position	Bit Name	Function
15 to 0	PNOTn_[15:0]	Specifies if Pn.Pn_m is inverted or not: 0: Pn.Pn_m is not inverted (Pn_m → Pn_m) 1: Pn.Pn_m is inverted ($\overline{\text{Pn_m}}$ → Pn_m)

NOTES

1. The control bits of the JTAG port not register (JPNOT0) are JPNOT0_[7:0].
2. For details about the relevant port groups and bits, see **Section 2.4.1.1, List of Port Registers**.

(5) PSRn/JPSR0 — Port Set/Reset Register

This register provides an alternative method to write data to a bit in the Pn register.

The upper 16 bits of PSRn specify whether the data of the corresponding lower 16 bits of PSRn. is written to the Pn.Pn_m bit.

Access: This register can be read/written in 32-bit units.
PSRn: Bits 31 to 16 are always read as 0000_H. Reading bits 15 to 0 returns the value of the Pn register.
JPSRn: Bits 31 to 8 are always read as $0000\ 00_H$. Reading bits 7 to 0 returns the value of the JPn register.

Address: PSRn: <PORT_base> + 0004_H + n × 40_H
JPSR0: <JPORT0_base> + 0004_H **Note 1**

Value after reset: PSRn: $0000\ 0000_H$
JPSR0: $0000\ 0000_H$

Note 1. The number of valid bit positions (the value m) depends on the number of pins included in each device. See the list of registers by group (**Table 2.36, List of Registers in Port Group 0**, **Table 2.37, List of Registers in Port Group 1**, **Table 2.38, List of Registers in Port Group 2**, **Table 2.39, List of Registers in Port Group 3**, **Table 2.40, List of Registers in Port Group 4**,**Table 2.41, List of Registers in Port Group 5**, **Table 2.42, List of Registers in Port Group JP0**) in **Section 2.4.1.1, List of Port Registers**.

Bit	31	30	29	28	27	26	25	24	23	22	21	20	19	18	17	16
	PSRn_31	PSRn_30	PSRn_29	PSRn_28	PSRn_27	PSRn_26	PSRn_25	PSRn_24	PSRn_23	PSRn_22	PSRn_21	PSRn_20	PSRn_19	PSRn_18	PSRn_17	PSRn_16
Value after reset	0	0	0	0	0	0	0	0	0	0	0	0	0	0	0	0
R/W	R/W	R/W	R/W	R/W	R/W	R/W	R/W	R/W	R/W	R/W	R/W	R/W	R/W	R/W	R/W	R/W

Bit	15	14	13	12	11	10	9	8	7	6	5	4	3	2	1	0
	PSRn_15	PSRn_14	PSRn_13	PSRn_12	PSRn_11	PSRn_10	PSRn_9	PSRn_8	PSRn_7	PSRn_6	PSRn_5	PSRn_4	PSRn_3	PSRn_2	PSRn_1	PSRn_0
Value after reset	0	0	0	0	0	0	0	0	0	0	0	0	0	0	0	0
R/W	R/W	R/W	R/W	R/W	R/W	R/W	R/W	R/W	R/W	R/W	R/W	R/W	R/W	R/W	R/W	R/W

Table 2.23 PSRn Register Contents

Bit Position	Bit Name	Function
31 to 16	PSRn_[31:16]	Specifies whether the value of the corresponding lower bit of PSRn_[15:0] is written to Pn_m: 0: Pn_m does not depend on PSRn_m. 1: The value of Pn_m is the same as that of PSRn_m. Example: When PSRn.PSRn_31 = 1, the value of bit PSRn.PSRn_15 is written to bit Pn.Pn_15.
15 to 0	PSRn_[15:0]	Specifies the Pn_m value when the corresponding upper bit PSRn_(m+16) is 1: 0: Pn_m = 0 1: Pn_m = 1

NOTES

1. The control bits of the JTAG port set/reset register (JPSR0) are JPSR0_[31:0].
2. For details about the relevant port groups and bits, see **Section 2.4.1.1, List of Port Registers**.

(6) PINVn — Port Output Level Inversion Register

This register enables inverting the output level from a pin. It is effective when the pin is in output mode regardless of port output mode or alternative output mode.

Writing to this register is protected by a special sequence of instructions by using the protection command register PPCMDn.

For details, see **Section 4.3, Write-Protected Registers**.

Access: This register can be read/written in 32-bit units.

Address: <PORT_base> + 0030_H + n × 40_H **Note 1**

Value after reset: $0000\ 0000_H$

Note 1. The number of valid bit positions (the value m) depends on the number of pins included in each device. See the list of registers by group (**Table 2.36, List of Registers in Port Group 0**, **Table 2.37, List of Registers in Port Group 1**, **Table 2.38, List of Registers in Port Group 2**, **Table 2.39, List of Registers in Port Group 3**, **Table 2.40, List of Registers in Port Group 4**,**Table 2.41, List of Registers in Port Group 5**) in **Section 2.4.1.1, List of Port Registers**.

CAUTION

The upper 16 bits are also subject to being written by inverted values in the protected port register write sequence. For details, see **Section 4.3, Write-Protected Registers**.

Bit	31	30	29	28	27	26	25	24	23	22	21	20	19	18	17	16
	—	—	—	—	—	—	—	—	—	—	—	—	—	—	—	—
Value after reset	0	0	0	0	0	0	0	0	0	0	0	0	0	0	0	0
R/W	R/W	R/W	R/W	R/W	R/W	R/W	R/W	R/W	R/W	R/W	R/W	R/W	R/W	R/W	R/W	R/W

Bit	15	14	13	12	11	10	9	8	7	6	5	4	3	2	1	0
	PINVn_15	PINVn_14	PINVn_13	PINVn_12	PINVn_11	PINVn_10	PINVn_9	PINVn_8	PINVn_7	PINVn_6	PINVn_5	PINVn_4	PINVn_3	PINVn_2	PINVn_1	PINVn_0
Value after reset	0	0	0	0	0	0	0	0	0	0	0	0	0	0	0	0
R/W	R/W	R/W	R/W	R/W	R/W	R/W	R/W	R/W	R/W	R/W	R/W	R/W	R/W	R/W	R/W	R/W

Table 2.24 PINVn Register Contents

Bit Position	Bit Name	Function
15 to 0	PINVn_[15:0]	Specifies whether the output level from a pin is inverted or not. 0: Pin output level is not inverted. 1: Pin output level is inverted.

NOTE

For details about the relevant port groups and bits, see **Section 2.4.1.1, List of Port Registers**.

2.3.4.4 Configuration of Electrical Characteristics

(1) PUn/JPU0 — Pull-up Option Register

This register specifies whether an on-chip pull-up resistor is connected to an input pin.

Access: PUn: This register can be read/written in 16-bit units.
JPU0: This register can be read/written in 8-bit units.

Address: PUn: <PORT_base> + $400C_H$ + n × 40_H
JPU0: <JPORT0_base> + $400C_H$ **Note 1**

Value after reset: PUn: 0000_H
JPU0: 00_H

Note 1. The number of valid bit positions (the value m) depends on the number of pins included in each device. See the list of registers by group (**Table 2.36, List of Registers in Port Group 0**, **Table 2.37, List of Registers in Port Group 1**, **Table 2.38, List of Registers in Port Group 2**, **Table 2.39, List of Registers in Port Group 3**, **Table 2.40, List of Registers in Port Group 4**,**Table 2.41, List of Registers in Port Group 5**, **Table 2.42, List of Registers in Port Group JP0**) in **Section 2.4.1.1, List of Port Registers**.

Bit	15	14	13	12	11	10	9	8	7	6	5	4	3	2	1	0
	PUn_15	PUn_14	PUn_13	PUn_12	PUn_11	PUn_10	PUn_9	PUn_8	PUn_7	PUn_6	PUn_5	PUn_4	PUn_3	PUn_2	PUn_1	PUn_0
Value after reset	0	0	0	0	0	0	0	0	0	0	0	0	0	0	0	0
R/W	R/W	R/W	R/W	R/W	R/W	R/W	R/W	R/W	R/W	R/W	R/W	R/W	R/W	R/W	R/W	R/W

Table 2.25 PUn Register Contents

Bit Position	Bit Name	Function
15 to 0	PUn_[15:0]	Specifies whether an on-chip pull-up resistor is connected to the corresponding pin: 0: No on-chip pull-up resistor is connected. 1: On-chip pull-up resistor is connected.

NOTES

1. Do not set PUn.PUn_m = 1 and PDn.PDn_m = 1 to a single pin.
2. The on-chip pull-up resistor has no effect when the pin is operated in output mode.
3. The control bits of the JTAG pull-up option register (JPU0) are JPU0_[7:0].
4. For details about the relevant port groups and bits, see **Section 2.4.1.1, List of Port Registers**.

(2) PDn/JPD0 — Pull-down Option Register

This register specifies whether an on-chip pull-down resistor is connected to an input pin.

Access: PDn: This register can be read/written in 16-bit units.
JPD0: This register can be read/written in 8-bit units.

Address: PDn: <PORT_base> + 4010_H + n × 40_H
JPD0: <JPORT0_base> + 4010_H **Note 1**

Value after reset: PDn: 0000_H
JPD0: 00_H

Note 1. The number of valid bit positions (the value m) depends on the number of pins included in each device. See the list of registers by group (**Table 2.36, List of Registers in Port Group 0**, **Table 2.37, List of Registers in Port Group 1**, **Table 2.38, List of Registers in Port Group 2**, **Table 2.39, List of Registers in Port Group 3**, **Table 2.40, List of Registers in Port Group 4**,**Table 2.41, List of Registers in Port Group 5**, **Table 2.42, List of Registers in Port Group JP0**) in **Section 2.4.1.1, List of Port Registers**.

Bit	15	14	13	12	11	10	9	8	7	6	5	4	3	2	1	0
	PDn_15	PDn_14	PDn_13	PDn_12	PDn_11	PDn_10	PDn_9	PDn_8	PDn_7	PDn_6	PDn_5	PDn_4	PDn_3	PDn_2	PDn_1	PDn_0
Value after reset	0	0	0	0	0	0	0	0	0	0	0	0	0	0	0	0
R/W	R/W	R/W	R/W	R/W	R/W	R/W	R/W	R/W	R/W	R/W	R/W	R/W	R/W	R/W	R/W	R/W

Table 2.26 PDn Register Contents

Bit Position	Bit Name	Function
15 to 0	PDn_[15:0]	Specifies whether a on-chip pull-down resistor is connected to the corresponding pin: 0: No on-chip pull-down resistor is connected. 1: On-chip pull-down resistor is connected.

NOTES

1. Do not set PUn.PUn_m = 1 and PDn.PDn_m = 1 to a single pin.
2. The on-chip pull-down resistor has no effect when the pin is operated in output mode.
3. The control bits of the JTAG pull-down option register (JPD0) are JPD0_[7:0].
4. For details about the relevant port groups and bits, see **Section 2.4.1.1, List of Port Registers**.

(3) PODCn/JPODC0 — Port Open-drain Control Register

This register selects push-pull or open-drain as the output buffer function.

Writing to this register is protected by a special sequence of instructions by using the protection command register PPCMDn or JPPCMDn.

For details, see **Section 4.3, Write-Protected Registers**.

Access: This register can be read/written in 32-bit units.

Address: PODCn: <PORT_base> + 4014_H + n × 40_H
JPODC0: <JPORT0_base> + 4014_H **Note 1**

Value after reset: PODC0: $0000\ 0400_H$, PODC1 to 5: $0000\ 0000_H$
JPODC0: $0000\ 0000_H$

Note 1. The number of valid bit positions (the value m) depends on the number of pins included in each device. See the list of registers by group (**Table 2.36, List of Registers in Port Group 0**, **Table 2.37, List of Registers in Port Group 1**, **Table 2.38, List of Registers in Port Group 2**, **Table 2.39, List of Registers in Port Group 3**, **Table 2.40, List of Registers in Port Group 4**,**Table 2.41, List of Registers in Port Group 5**, **Table 2.42, List of Registers in Port Group JP0**) in **Section 2.4.1.1, List of Port Registers**.

CAUTION

The upper 16 bits are also subject to being written by inverted values in the protected port register write sequence. For details, see **Section 4.3, Write-Protected Registers**.

Bit	31	30	29	28	27	26	25	24	23	22	21	20	19	18	17	16
	—	—	—	—	—	—	—	—	—	—	—	—	—	—	—	—
Value after reset	0	0	0	0	0	0	0	0	0	0	0	0	0	0	0	0
R/W	R	R	R	R	R	R	R	R	R	R	R	R	R	R	R	R

Bit	15	14	13	12	11	10	9	8	7	6	5	4	3	2	1	0
	PODCn_15	PODCn_14	PODCn_13	PODCn_12	PODCn_11	PODCn_10	PODCn_9	PODCn_8	PODCn_7	PODCn_6	PODCn_5	PODCn_4	PODCn_3	PODCn_2	PODCn_1	PODCn_0
Value after reset	0	0	0	0	0	*1	0	0	0	0	0	0	0	0	0	0
R/W	R/W	R/W	R/W	R/W	R/W	R/W	R/W	R/W	R/W	R/W	R/W	R/W	R/W	R/W	R/W	R/W

Note 1. PODC0: 1
PODC1 to PODC5, JPODC0: 0

Table 2.27 PODCn Register Contents

Bit Position	Bit Name	Function
31 to 16	Reserved	When read, the value after reset is read. When writing, write the value after reset.
15 to 0	PODCn_[15:0] (JPODCn_[15:0])	Specify the output circuit characteristics of Pn_m (m = 0 to 15), together with the PODCEn_[15:0] bits.

PODCEn_m	PODCn_m	Output Circuit Characteristics
0	0	Push-pull
0	1	N-ch open-drain
1	0	Push-pull
1	1	P-ch open-drain

Specify the output circuit characteristics of JPn_m (m = 0 to 15).

JPODCn_m	Output Circuit Characteristics
0	Push-pull
1	N-ch open-drain

NOTE

1. The control bits for the JTAG port open-drain control register (JPODC0) are JPODC0_[31:0].
2. For details on the relevant port groups and bits, see **Section 2.4.1.1, List of Port Registers**.

(4) PODCEn — Port Open-drain Control Expansion Register

This register selects push-pull or open-drain as the output buffer function.

Writing to this register is protected by a special sequence of instructions by using the protection command register PPCMDn.

For details, see **Section 4.3, Write-Protected Registers**.

Access: This register can be read/written in 32-bit units.

Address: <PORT_base> + $403C_H$ + n × 40_H **Note 1**

Value after reset: $0000\ 0000_H$

Note 1. The number of valid bit positions (the value m) depends on the number of pins included in each device. See the list of registers by group (**Table 2.36, List of Registers in Port Group 0**, **Table 2.37, List of Registers in Port Group 1**, **Table 2.38, List of Registers in Port Group 2**, **Table 2.39, List of Registers in Port Group 3**, **Table 2.40, List of Registers in Port Group 4**,**Table 2.41, List of Registers in Port Group 5**) in **Section 2.4.1.1, List of Port Registers**.

CAUTION

The upper 16 bits are also subject to being written by inverted values in the protected port register write sequence. For details, see **Section 4.3, Write-Protected Registers**.

Bit	31	30	29	28	27	26	25	24	23	22	21	20	19	18	17	16
	—	—	—	—	—	—	—	—	—	—	—	—	—	—	—	—
Value after reset	0	0	0	0	0	0	0	0	0	0	0	0	0	0	0	0
R/W	R	R	R	R	R	R	R	R	R	R	R	R	R	R	R	R

Bit	15	14	13	12	11	10	9	8	7	6	5	4	3	2	1	0
	PODCEn_15	PODCEn_14	PODCEn_13	PODCEn_12	PODCEn_11	PODCEn_10	PODCEn_9	PODCEn_8	PODCEn_7	PODCEn_6	PODCEn_5	PODCEn_4	PODCEn_3	PODCEn_2	PODCEn_1	PODCEn_0
Value after reset	0	0	0	0	0	0	0	0	0	0	0	0	0	0	0	0
R/W	R/W	R/W	R/W	R/W	R/W	R/W	R/W	R/W	R/W	R/W	R/W	R/W	R/W	R/W	R/W	R/W

Table 2.28 PODCEn Register Contents

Bit Position	Bit Name	Function
31 to 16	Reserved	When read, the value after reset is read. When writing, write the value after reset.
15 to 0	PODCEn_[15:0]	Specify the output circuit characteristics of pin m (m = 0 to 15), together with the PODCn_[15:0] bits.

PODCEn_m	PODCn_m	Output Circuit Characteristics
0	0	Push-pull
0	1	N-ch open-drain
1	0	Push-pull
1	1	P-ch open-drain

(5) PDSCn/JPDSC0 — Port Drive Strength Control Register

This register specifies the output driving abilities of port pins. High- or low-speed mode (high or low drive strength) of an output buffer is selectable by using this function.

Writing to this register is protected by a special sequence of instructions by using the protection command register PPCMDn or JPPCMDn.

For details, see **Section 4.3, Write-Protected Registers**.

Access: This register can be read/written in 32-bit units.

Address: PDSCn: <PORT_base> + 4018_H + n × 40_H
JPDSC0: <JPORT0_base> + 4018_H **Note 1**

Value after reset: PDSC0: 0000 0400_H, PDSC1 to 5: 0000 0000_H
JPDSC0: 0000 0000_H

Note 1. The number of valid bit positions (the value m) depends on the number of pins included in each device. See the list of registers by group (**Table 2.36, List of Registers in Port Group 0**, **Table 2.37, List of Registers in Port Group 1**, **Table 2.38, List of Registers in Port Group 2**, **Table 2.39, List of Registers in Port Group 3**, **Table 2.40, List of Registers in Port Group 4**,**Table 2.41, List of Registers in Port Group 5**, **Table 2.42, List of Registers in Port Group JP0**) in **Section 2.4.1.1, List of Port Registers**.

CAUTION

The upper 16 bits are also subject to being written by inverted values in the protected port register write sequence. For details, see **Section 4.3, Write-Protected Registers**.

Bit	31	30	29	28	27	26	25	24	23	22	21	20	19	18	17	16
	—	—	—	—	—	—	—	—	—	—	—	—	—	—	—	—
Value after reset	0	0	0	0	0	0	0	0	0	0	0	0	0	0	0	0
R/W	R	R	R	R	R	R	R	R	R	R	R	R	R	R	R	R

Bit	15	14	13	12	11	10	9	8	7	6	5	4	3	2	1	0
	PDSCn_15	PDSCn_14	PDSCn_13	PDSCn_12	PDSCn_11	PDSCn_10	PDSCn_9	PDSCn_8	PDSCn_7	PDSCn_6	PDSCn_5	PDSCn_4	PDSCn_3	PDSCn_2	PDSCn_1	PDSCn_0
Value after reset	0	0	0	0	0	*1	0	0	0	0	0	0	0	0	0	0
R/W	R/W	R/W	R/W	R/W	R/W	R/W	R/W	R/W	R/W	R/W	R/W	R/W	R/W	R/W	R/W	R/W

Note 1. PDSC0: 1
PDSC1 to PDSC5, JPDSC0: 0

Table 2.29 PDSCn Register Contents

Bit Position	Bit Name	Function
15 to 0	PDSCn_[15:0]	Specifies the output buffer characteristics of pin m (m = 0 to 15), together with the PUCCn_[15:0] bits.

PUCCn_m	PDSCn_m	Output Buffer Characteristics
0	0	SLOW
0	1	FAST
1	0	MIDDLE
1	1	MIDDLE

NOTES

1. The control bits for the JTAG port drive strength control register (JPDSC0) is JPDSC0_[31:0].
2. For details about the relevant port groups and bits, see **Section 2.4.1.1, List of Port Registers**.
3. For the output buffer characteristics of the driving ability, see **Section 37.9.2, Driving Ability**.
4. Settings for driving ability are effective even if an alternative function is in use on the pin.

5. When the driving ability is set to “fast”, the pin produces a larger driving current than when the setting is “slow”. For the allowable total driving currents, see **Section 37.8.3, Allowed Output Current**.

(6) PUCCn/JPUCC0 — Port Universal Control Register

This register expands the function to specify the characteristics of an output buffer.

It can specify three output buffer characteristics, together with the Port Drive Strength Control Register (PDSCn).

Writing to this register is protected by a special sequence of instructions by using the protection command register PPCMDn or JPPCMDn.

For details, see **Section 4.3, Write-Protected Registers**.

Access: This register can be read/written in 32-bit units.

Address: PUCCn: <PORT_base> + 4028_H + n × 40_H
JPUCC0: <JPORT0_base> + 4028_H **Note 1**

Value after reset: PUCCn: $0000\ 0000_H$
JPUCC0: $0000\ 0000_H$

Note 1. The number of valid bit positions (the value m) depends on the number of pins included in each device. See the list of registers by group (**Table 2.36, List of Registers in Port Group 0**, **Table 2.37, List of Registers in Port Group 1**, **Table 2.38, List of Registers in Port Group 2**, **Table 2.39, List of Registers in Port Group 3**, **Table 2.40, List of Registers in Port Group 4**,**Table 2.41, List of Registers in Port Group 5**, **Table 2.42, List of Registers in Port Group JP0**) in **Section 2.4.1.1, List of Port Registers**.

CAUTION

The upper 16 bits are also subject to being written by inverted values in the protected port register write sequence. For details, see **Section 4.3, Write-Protected Registers**.

Bit	31	30	29	28	27	26	25	24	23	22	21	20	19	18	17	16
	—	—	—	—	—	—	—	—	—	—	—	—	—	—	—	—
Value after reset	0	0	0	0	0	0	0	0	0	0	0	0	0	0	0	0
R/W	R	R	R	R	R	R	R	R	R	R	R	R	R	R	R	R

Bit	15	14	13	12	11	10	9	8	7	6	5	4	3	2	1	0
	PUCCn_15	PUCCn_14	PUCCn_13	PUCCn_12	PUCCn_11	PUCCn_10	PUCCn_9	PUCCn_8	PUCCn_7	PUCCn_6	PUCCn_5	PUCCn_4	PUCCn_3	PUCCn_2	PUCCn_1	PUCCn_0
Value after reset	0	0	0	0	0	0	0	0	0	0	0	0	0	0	0	0
R/W	R/W	R/W	R/W	R/W	R/W	R/W	R/W	R/W	R/W	R/W	R/W	R/W	R/W	R/W	R/W	R/W

Table 2.30 PUCCn Register Contents

Bit Position	Bit Name	Function
15 to 0	PUCCn_[15:0]	Specifies the output buffer characteristics of pin m (m = 0 to 15), together with the PDSCn_[15:0] bits.

PUCCn_m	PDSCn_m	Output buffer characteristics
0	0	SLOW
0	1	FAST
1	0	MIDDLE
1	1	MIDDLE

NOTES

1. The control bits of the JTAG port universal control register (JPUCC0) are JPUCC0_[31:0].
2. For details about the relevant port groups and bits, see **Section 2.4.1.1, List of Port Registers**.
3. For the output buffer characteristics of the driving ability, see **Section 37.9.2, Driving Ability**.
4. Settings for driving ability are effective even if an alternative function is in use on the pin.
5. When the driving ability is set to “fast”, the pin produces a larger driving current than when the setting is “slow”. For the allowable total driving currents, see **Section 37.8.3, Allowed Output Current**.

(7) PISAn/JPISA0 — Port Input Buffer Selection Register

This register specifies the input buffer characteristics.

Access: PISAn: This register can be read/written in 16-bit units.
JPISA0: This register can be read/written in 8-bit units.

Address: PISAn: <PORT_base> + $402C_H$ + n × 40_H
JPISA0: <JPORT0_base> + $402C_H$ **Note 1**

Value after reset: PISA0: 0400_H, PISA1 to 4: 0000_H
JPISA0: 00_H

Note 1. The number of valid bit positions (the value m) depends on the number of pins included in each device. See the list of registers by group (**Table 2.36, List of Registers in Port Group 0**, **Table 2.37, List of Registers in Port Group 1**, **Table 2.38, List of Registers in Port Group 2**, **Table 2.39, List of Registers in Port Group 3**, **Table 2.40, List of Registers in Port Group 4**, **Table 2.42, List of Registers in Port Group JP0**) in **Section 2.4.1.1, List of Port Registers**.

Bit	15	14	13	12	11	10	9	8	7	6	5	4	3	2	1	0
	PISAn_15	PISAn_14	PISAn_13	PISAn_12	PISAn_11	PISAn_10	PISAn_9	PISAn_8	PISAn_7	PISAn_6	PISAn_5	PISAn_4	PISAn_3	PISAn_2	PISAn_1	PISAn_0
Value after reset	0	0	0	0	0	*1	0	0	0	0	0	0	0	0	0	0
R/W	R/W	R/W	R/W	R/W	R/W	R/W	R/W	R/W	R/W	R/W	R/W	R/W	R/W	R/W	R/W	R/W

Note 1. PISA0: 1
PISA1 to PISA4, JPISA0: 0

Table 2.31 PISAn Register Contents

Bit Position	Bit Name	Function
15 to 0	PISAn_[15:0]	Specify the input buffer characteristics. 0: Type 1 (Schmitt) 1: Type 2 (CMOS)

NOTES

1. For details about the definition of type 1 and type 2, see **Section 2.3.5.4, Input Buffer Control (PISA)**.
2. For details about the relevant port groups and bits, see **Section 2.4.1.1, List of Port Registers**.
3. The control bits for the JTAG port input buffer select register (JPISA0) are JPISA0_[7:0]

2.3.4.5 Pin-unit Register

(1) PCRn_m/JPCR0_m — Port Control Register

Each register of a port group can be accessed via this register and a PCR register can set some functions of a single pin. For example, setting bit 6 of the PCRn_m register to 1 sets bit m of the PMCn register to 1 also.

Access: This register can be read/written in 32-bit units.

Address: PCRn_m: <PORT_base> + 2000_H + n × 40_H + 4_H × m
JPCR0_m: <JPORT0_base> + 2000_H + 4_H × m[Note 1]

Value after reset: PCR0_10: 1140 0000_H, PCRn_m except for PCR0_10: 0000 0010_H
JPCR0_m: 0000 0010_H

Note 1. The number of valid bit positions (the value m) depends on the number of pins included in each device. See the list of registers by group (**Table 2.36, List of Registers in Port Group 0**, **Table 2.37, List of Registers in Port Group 1**, **Table 2.38, List of Registers in Port Group 2**, **Table 2.39, List of Registers in Port Group 3**, **Table 2.40, List of Registers in Port Group 4**,**Table 2.41, List of Registers in Port Group 5**, **Table 2.42, List of Registers in Port Group JP0**) in **Section 2.4.1.1, List of Port Registers**.

Note 2. The PINVn, PODCn, PODCEn, PUCCn, and PDSCn registers cannot be set via this register.

Bit	31	30	29	28	27	26	25	24	23	22	21	20	19	18	17	16
	—	PINV	—	PODC	PODCE	—	PUCC	PDSC	—	PISA	—	—	PU	PD	PBDC	PIBC
Value after reset	0	0	0	*1	0	0	0	*1	0	*1	0	0	0	0	0	0
R/W	R	R	R	R	R	R	R	R	R	R/W	R	R	R/W	R/W	R/W	R/W

Bit	15	14	13	12	11	10	9	8	7	6	5	4	3	2	1	0
	—	—	—	P	—	—	—	PPR	—	PMC	PIPC	PM	—	PFCAE	PFCE	PFC
Value after reset	0	0	0	0	0	0	0	0	0	0	0	*2	0	0	0	0
R/W	R	R	R	R/W	R	R	R	R	R	R/W	R/W	R/W	R	R/W	R/W	R/W

Note 1. PCR0_10: 1
PCRn_m except PCR0_10, JPCR0_m: 0

Note 2. PCR0_10: 0
PCRn_m except PCR0_10, JPCR0_m: 1

Table 2.32 PCRn_m Register Contents (1/2)

Bit Position	Bit Name	Function
31	Reserved	When read, the value after reset is read. When writing, write the value after reset.
30	PINV	The value of bit m of the PINVn register can be read.
29	Reserved	When read, the value after reset is read. When writing, write the value after reset.
28	PODC	The value of bit m of the PODCn register can be read.
27	PODCE	The value of bit m of the PODCEn register can be read.
26	Reserved	When read, the value after reset is read. When writing, write the value after reset.
25	PUCC	The value of bit m of the PUCCn register can be read.
24	PDSC	The value of bit m of the PDSCn register can be read.
23	Reserved	When read, the value after reset is read. When writing, write the value after reset.
22	PISA	Same function as bit m of the PISAn register.
21, 20	Reserved	When read, the value after reset is read. When writing, write the value after reset.
19	PU	Same function as bit m of the PUn register

Table 2.32 PCRn_m Register Contents (2/2)

Bit Position	Bit Name	Function
18	PD	Same function as bit m of the PDn register
17	PBDC	Same function as bit m of the PBDCn register
16	PIBC	Same function as bit m of the PIBCn register
15 to 13	Reserved	When read, the value after reset is read. When writing, write the value after reset.
12	P	Same function as bit m of the Pn register
11 to 9	Reserved	When read, the value after reset is read. When writing, write the value after reset.
8	PPR	The value of bit m of the PPRn register can be read.
7	Reserved	When read, the value after reset is read. When writing, write the value after reset.
6	PMC	Same function as bit m of the PMCn register
5	PIPC	Same function as bit m of the PIPCn register
4	PM	Same function as bit m of the PMn register
3	Reserved	When read, the value after reset is read. When writing, write the value after reset.
2	PFCAE	Same function as bit m of the PFCAEn register
1	PFCE	Same function as bit m of the PFCEn register
0	PFC	Same function as bit m of the PFCn register

NOTE

For details about the relevant port groups and bits, see **Section 2.4.1.1, List of Port Registers**.

2.3.4.6 Example of Port Configuration Flowchart

The followings are examples of the port configuration flow.

CAUTION

When a pin is set to an alternative output mode while the PIPCn.PIPCn_m bit is 0, it may be temporarily switched to an alternative input mode. This occurs during the period between setting of the PMCn.PMCn_m bit to 1 and setting of the PMn.PMn_m bit to 0. Due to this possibility of a pin being temporarily switched to an alternative input mode, if a pin has an interrupt-related signal as an alternative function, disable the interrupt or make sure that it is ignored.

(1) Batch Setting

The following shows an example to collectively set a port group.

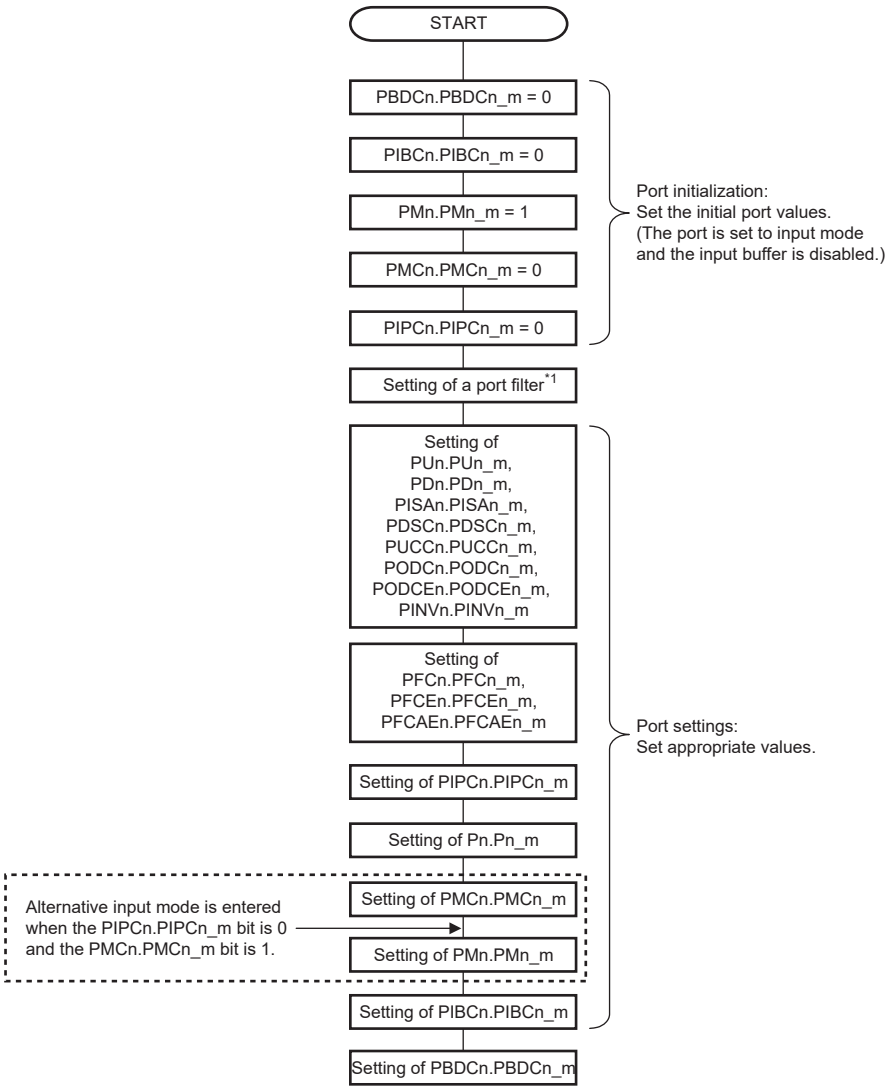

Note 1. While PMCn.PMCn_m bit is 0, an interrupt may be triggered during the configuration of the port registers under the following conditions:

For NMI and INTP7-9 interrupt signals:

– The port filter is set to rising edge or both edges detection and the PMCn.PMCn_m bit is set to 1 while the input terminal is at high level.

For INTP0-6 and INTP10-12 interrupt signals:

– The port filter is set to falling edge or both edges detection and the PMCn.PMCn_m bit is set to 1 while the input terminal is at low level.

In order to avoid an unintended interrupt occurrence, use the following configuration sequence:

1. Configure the PMCn register.
2. Wait for the period of pulse rejection.
3. Configure the edge/level detection register.

Figure 2.5 Example of Port Configuration Flow (batch setting)

(2) Individual Setting

The following shows an example to individually set a port group.

And it is capable of setting simultaneous bits at once within the configurable range described below by using PCRn_m register.

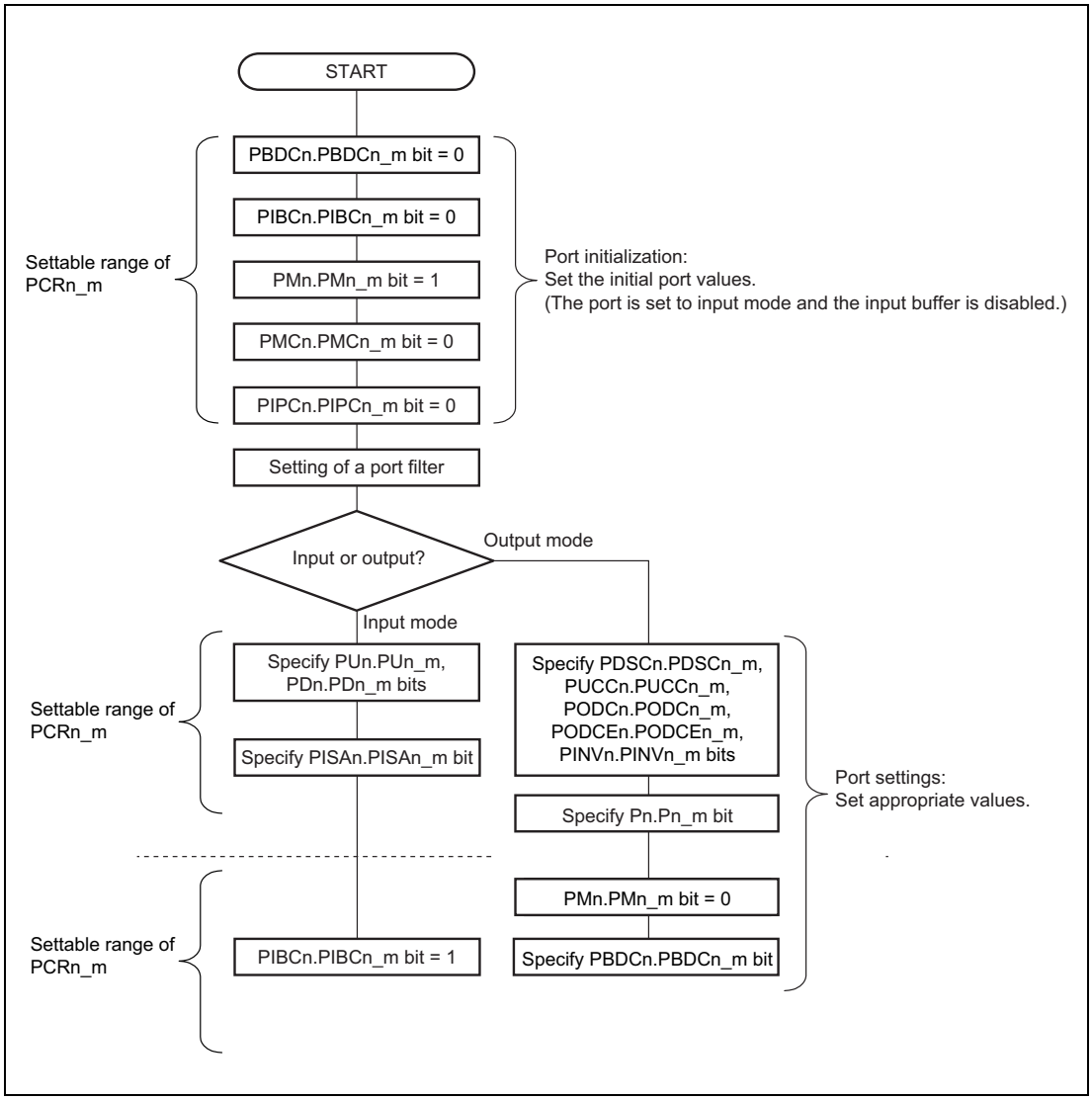

Figure 2.6 Example of Port Configuration Flow (in port mode)

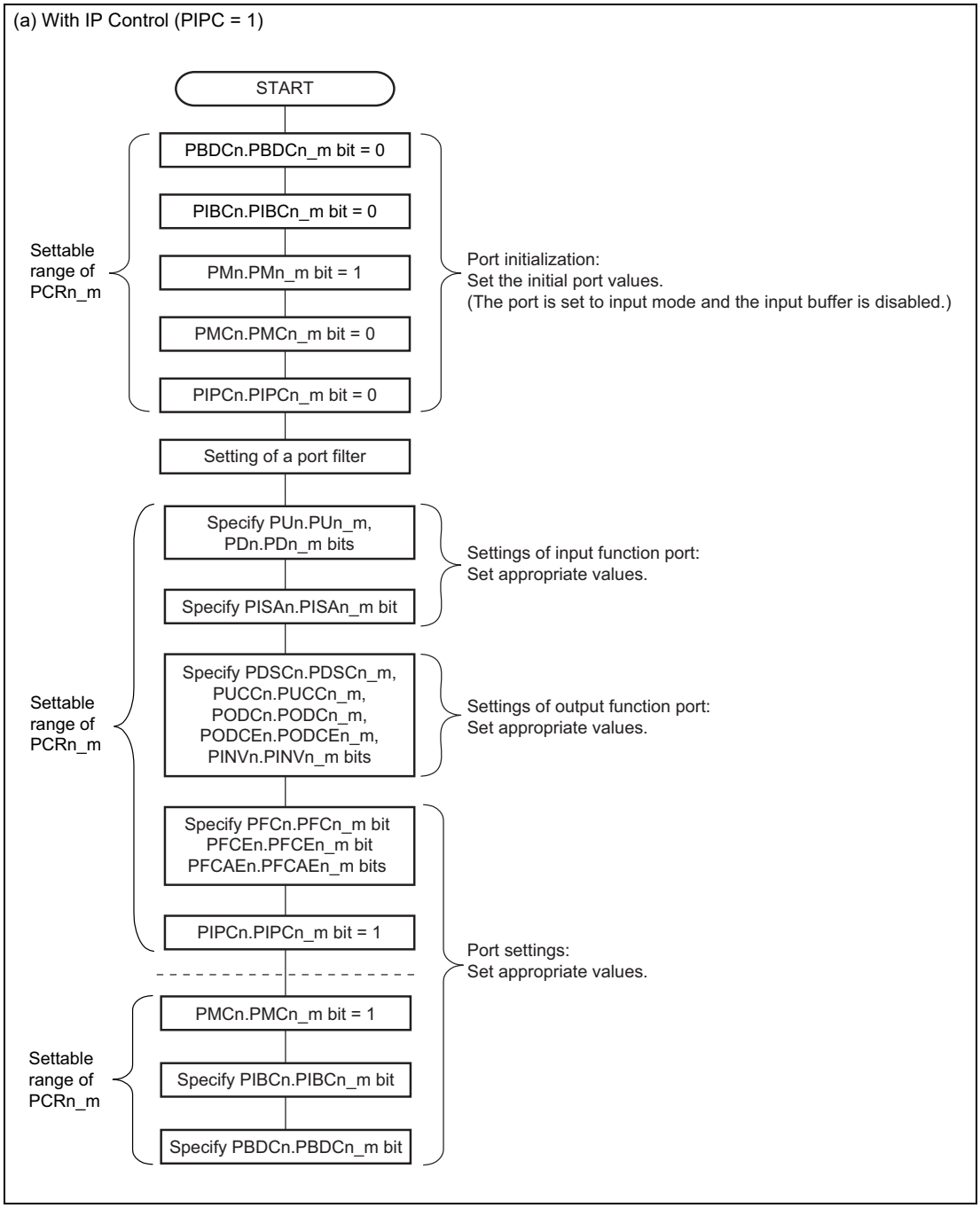

Figure 2.7 Example of Port Configuration Flow (in alternative mode)(1/2)

(b) Without IP Control (PIPC = 0)

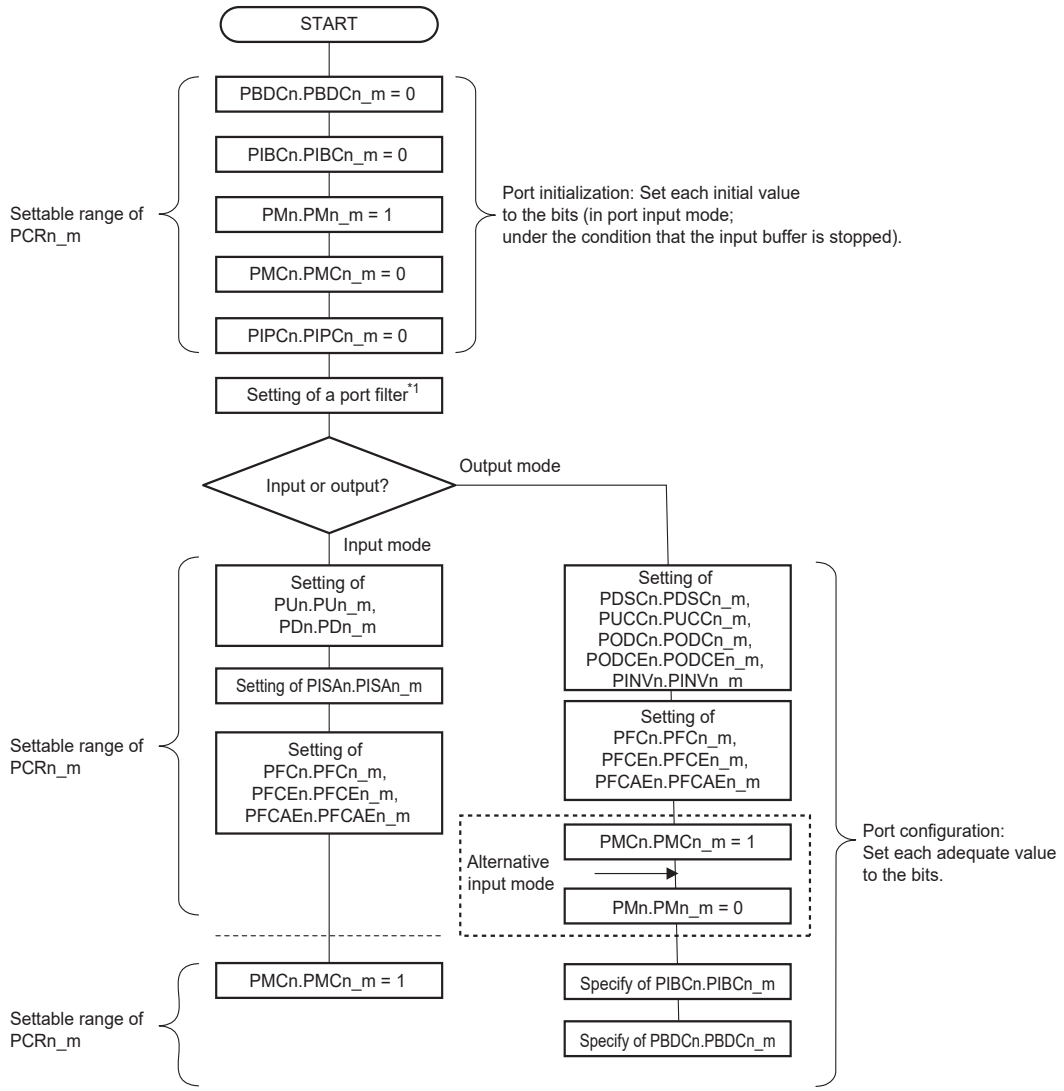

Note 1. While PMCn.PMCn_m bit is 0, an interrupt may be triggered during the configuration of the port registers under the following conditions:

For NMI and INTP7-9 interrupt signals:

– The port filter is set to rising edge or both edges detection and the PMCn.PMCn_m bit is set to 1 while the input terminal is at high level.

For INTP0-6 and INTP10-12 interrupt signals:

– The port filter is set to falling edge or both edges detection and the PMCn.PMCn_m bit is set to 1 while the input terminal is at low level.

In order to avoid an unintended interrupt occurrence, use the following configuration sequence:

1. Configure the PMCn register.
2. Wait for the period of pulse rejection.
3. Configure the edge/level detection register.

Figure 2.8 Example of Port Configuration Flow (in alternative mode) (2/2)

2.3.5 Functional Selection

2.3.5.1 Register Configuration in Use of the Alternative Function

When the pin alternative function is used, set PMCn_m = 1 and select the alternative numbers of PFCn_m, PFCEn_m, and PFCAEn_m. In several peripheral functions, a single alternative I/O function is allocated to multiple pins. However, such an alternative function should not be enabled in multiple pins at the same time. For example, an external interrupt input, INTP0 is allocated to P0_2 and P2_5, but this alternative function can only be selected in either of them.

2.3.5.2 Alternative Function to be used in Direct I/O Control Alternative Mode

When the pins listed in **Table 2.33** are used, switch to direct I/O control alternative mode. When setting PIPCn_m = 1, the PMn_m value which has been set is ignored because the peripheral function enables or disables inputs and outputs of the buffer.

Table 2.33 List of the Pins which is Available for Direct I/O Control Alternative Mode Setting

Function	Pin Name
CSIH0	CSIH0SCO
	CSIH0SO
CSIH1	CSIH1SCO
	CSIH1SO
CSIH2	CSIH2SCO
	CSIH2SO
CSIH3	CSIH3SCO
	CSIH3SO
CSIG0	CSIG0SCO
	CSIG0SO
TSG30	TSG30O1
	TSG30O2
	TSG30O3
	TSG30O4
	TSG30O5
	TSG30O6
TSG31	TSG31O1
	TSG31O2
	TSG31O3
	TSG31O4
	TSG31O5
	TSG31O6

CAUTION

Do not set PIPCn_m to 1 at pins not listed in Table 2.33.

2.3.5.3 Register Setting in Use of an Analog Input Pin

Since ADCDnIm (SAR-A/D) for an analog input are always connected to the A/D converter, setting of a port register to select a pin function is not required.

2.3.5.4 Input Buffer Control (PISA)

This device can select the input buffer characteristics (type 1 or type 2) of a port with the PISAn register. The following table lists applicable pins.

Table 2.34 Selection of Input Buffer Characteristics (1/2)

Port Name	Input Buffer Selection		Remarks	Device			
	Type 1 (PISAn_m = 0)	Type 2 (PISAn_m = 1)		100-pin (eVR)	100-pin (DPS)	144-pin (eVR)	144-pin (DPS)
P0_3	SHMT	CMOS		—	—	√	√
P0_4	SHMT	CMOS		—	—	√	√
P0_5	SHMT	CMOS		—	—	√	√
P0_6	SHMT	CMOS		—	—	√	√
P0_7	SHMT	CMOS		—	—	√	√
P0_8	SHMT	CMOS		—	—	√	√
P0_9	SHMT	CMOS		—	—	√	√
P0_13	SHMT	CMOS		√	√	√	√
P1_1	SHMT	CMOS		√	√	√	√
P1_2	SHMT	CMOS		√	√	√	√
P1_3	SHMT	CMOS		√	√	√	√
P1_4	SHMT	CMOS		√	√	√	√
P2_0	SHMT	CMOS		√	√	√	√
P2_1	SHMT	CMOS		√	√	√	√
P2_2	SHMT	CMOS		√	√	√	√
P2_5	SHMT	CMOS		√	√	√	√
P2_7	SHMT	CMOS		√	√	√	√
P2_12	SHMT	CMOS		—	—	√	√
P3_0	SHMT	CMOS		—	—	√	√
P3_1	SHMT	CMOS		—	—	√	√
P3_14	SHMT	CMOS		√	√	√	√
P4_0	SHMT	CMOS		√	√	√	√
P4_1	SHMT	CMOS		√	√	√	√
P4_2	SHMT	CMOS		√	√	√	√
P4_3	SHMT	CMOS		√	√	√	√
P4_4	SHMT	CMOS		√	√	√	√
P4_5	SHMT	CMOS		√	√	√	√
P4_6	SHMT	CMOS		√	√	√	√
P4_9	SHMT	CMOS		—	—	√	√
P4_10	SHMT	CMOS		—	—	√	√
P4_12	SHMT	CMOS		—	—	√	√
P4_13	SHMT	CMOS		—	—	√	√
JP0_0	SHMT	CMOS		√	√	√	√
JP0_1	SHMT	CMOS		√	√	√	√

Table 2.34 Selection of Input Buffer Characteristics (2/2)

Port Name	Input Buffer Selection		Remarks	Device			
	Type 1 (PISAn_m = 0)	Type 2 (PISAn_m = 1)		100-pin (eVR)	100-pin (DPS)	144-pin (eVR)	144-pin (DPS)
JP0_2	SHMT	CMOS		√	√	√	√
JP0_3	SHMT	CMOS		√	√	√	√
JP0_5	SHMT	CMOS		√	√	√	√

2.3.5.5 Output Buffer Control (PDSC, PUCC)

This device can select the output driver strength (SLOW, MIDDLE, or FAST) of a port with the PDSCn and PUCCn registers. The following table lists applicable pins.

Table 2.35 Selection of Output Driving Ability (1/3)

Port Name	Device			
	100-pin (eVR)	100-pin (DPS)	144-pin (eVR)	144-pin (DPS)
P0_0	√	√	√	√
P0_1	√	√	√	√
P0_2	√	√	√	√
P0_3	—	—	√	√
P0_4	—	—	√	√
P0_5	—	—	√	√
P0_6	—	—	√	√
P0_7	—	—	√	√
P0_8	—	—	√	√
P0_9	—	—	√	√
P0_10	√	√	√	√
P0_11	—	—	√	√
P0_12	—	—	√	√
P0_13	√	√	√	√
P0_14	—	—	√	√
P1_0	—	—	√	√
P1_1	√	√	√	√
P1_2	√	√	√	√
P1_3	√	√	√	√
P1_4	√	√	√	√
P2_0	√	√	√	√
P2_1	√	√	√	√
P2_2	√	√	√	√
P2_3	√	√	√	√
P2_4	√	√	√	√
P2_5	√	√	√	√
P2_6	√	√	√	√
P2_7	√	√	√	√
P2_8	√	√	√	√
P2_9	√	√	√	√
P2_10	—	—	√	√
P2_11	—	—	√	√
P2_12	—	—	√	√
P2_13	—	—	√	√
P2_14	—	—	√	√
P2_15	—	—	√	√
P3_0	—	—	√	√
P3_1	—	—	√	√
P3_2	—	—	√	√

Table 2.35 Selection of Output Driving Ability (2/3)

Port Name	Device			
	100-pin (eVR)	100-pin (DPS)	144-pin (eVR)	144-pin (DPS)
P3_3	√	√	√	√
P3_4	√	√	√	√
P3_5	√	√	√	√
P3_6	√	√	√	√
P3_7	√	√	√	√
P3_8	√	√	√	√
P3_9	√	√	√	√
P3_10	√	√	√	√
P3_11	√	√	√	√
P3_12	√	√	√	√
P3_13	√	√	√	√
P3_14	√	√	√	√
P4_0	√	√	√	√
P4_1	√	√	√	√
P4_2	√	√	√	√
P4_3	√	√	√	√
P4_4	√	√	√	√
P4_5	√	√	√	√
P4_6	√	√	√	√
P4_7	—	—	√	√
P4_8	—	—	√	√
P4_9	—	—	√	√
P4_10	—	—	√	√
P4_11	—	—	√	√
P4_12	—	—	√	√
P4_13	—	—	√	√
P4_14	—	—	√	√
P5_0	√	√	√	√
P5_1	√	√	√	√
P5_2	—	—	√	√
P5_3	—	—	√	√
P5_4	√	√	√	√
P5_5	√	√	√	√
P5_6	√	√	√	√
P5_7	√	√	√	√
P5_8	√	√	√	√
P5_9	√	√	√	√
P5_10	√	√	√	√
P5_11	—	—	√	√
P5_12	—	—	√	√
P5_13	—	—	√	√
P5_14	√	√	√	√
P5_15	—	—	√	√

Table 2.35 Selection of Output Driving Ability (3/3)

Port Name	Device			
	100-pin (eVR)	100-pin (DPS)	144-pin (eVR)	144-pin (DPS)
JP0_0	√	√	√	√
JP0_1	√	√	√	√
JP0_3	√	√	√	√
JP0_5	√	√	√	√

2.4 Organization of Port Groups

2.4.1 Port Function

2.4.1.1 List of Port Registers

Table 2.36 to **Table 2.42** show detailed bitmaps of control registers in each port group of the 144-pin products. In the bitmap field, "√" means an effective bit and "—" means a reserved one. Reserved areas are always read as the value after a reset. The write value also should be the value after a reset.

Bits corresponding to pins that are not present in 100-pin products are reserved.

For pins that are not present in 100-pin products, see **Table 2.2, Pin Function**.

Table 2.36 List of Registers in Port Group 0 (1/2)

Port group name	Register name	R/W	Value after reset	Access size	Bitmap																Remarks
					15	14	13	12	11	10	9	8	7	6	5	4	3	2	1	0	
0	P0	R/W	0000_H	16	—	√	√	√	√	√	√	√	√	√	√	√	√	√	√	√	
	PSR0	R/W	$0000\ 0000_H$	32	—	√	√	√	√	√	√	√	√	√	√	√	√	√	√	√	Lower 16 bits
					—	√	√	√	√	√	√	√	√	√	√	√	√	√	√	√	Upper 16 bits
	PPR0	R	0000_H	16	—	√	√	√	√	√	√	√	√	√	√	√	√	√	√	√	
	PM0	R/W	$FBFF_H$	16	—	√	√	√	√	√	√	√	√	√	√	√	√	√	√	√	
	PMC0	R/W	0000_H	16	—	√	√	√	√	√	√	√	√	√	√	√	√	√	√	√	
	PFC0	R/W	0000_H	16	—	√	√	√	√	√	√	√	√	√	√	√	√	√	√	√	
	PFCE0	R/W	0000_H	16	—	—	√	—	—	—	√	√	√	√	√	√	√	√	√	√	
	PNOT0	W	0000_H	16	—	√	√	√	√	√	√	√	√	√	√	√	√	√	√	√	
	PFCAE0	R/W	0000_H	16	—	—	—	—	—	—	—	√	√	√	√	√	√	√	√	√	
	PMSR0	R/W	$0000\ FBFF_H$	32	—	√	√	√	√	√	√	√	√	√	√	√	√	√	√	√	Lower 16 bits
					—	√	√	√	√	√	√	√	√	√	√	√	√	√	√	√	Upper 16 bits
	PMCSR0	R/W	$0000\ 0000_H$	32	√	√	√	√	√	√	√	√	√	√	√	√	√	√	√	√	Lower 16 bits
					√	√	√	√	√	√	√	√	√	√	√	√	√	√	√	√	Upper 16 bits
	PIBC0	R/W	0000_H	16	—	√	√	√	√	√	√	√	√	√	√	√	√	√	√	√	
	PBDC0	R/W	0000_H	16	—	√	√	√	√	√	√	√	√	√	√	√	√	√	√	√	
	PIPC0	R/W	0000_H	16	—	√	√	√	√	√	√	√	√	√	√	√	√	√	√	√	
	PU0	R/W	0000_H	16	—	√	√	√	√	√	√	√	√	√	√	√	√	√	√	√	
	PD0	R/W	0000_H	16	—	√	√	√	√	√	√	√	√	√	√	√	√	√	√	√	
	PODC0	R/W	$0000\ 0400_H$	32	—	√	√	√	√	√	√	√	√	√	√	√	√	√	√	√	Lower 16 bits
					—	—	—	—	—	—	—	—	—	—	—	—	—	—	—	—	Upper 16 bits
	PDSC0	R/W	$0000\ 0400_H$	32	—	√	√	√	√	√	√	√	√	√	√	√	√	√	√	√	Lower 16 bits
					—	—	—	—	—	—	—	—	—	—	—	—	—	—	—	—	Upper 16 bits
	PUCC0	R/W	$0000\ 0000_H$	32	—	√	√	√	√	√	√	√	√	√	√	√	√	√	√	√	Lower 16 bits
					—	—	—	—	—	—	—	—	—	—	—	—	—	—	—	—	Upper 16 bits
	PISA0	R/W	0400_H	16	—	—	√	—	—	—	√	√	√	√	√	√	√	—	—	—	
	PPROTS0	R	$0000\ 0000_H$	32	—	—	—	—	—	—	—	—	—	—	—	—	—	—	—	√	Lower 16 bits
					—	—	—	—	—	—	—	—	—	—	—	—	—	—	—	—	Upper 16 bits
	PPCMD0	W	$0000\ 0000_H$	32	—	—	—	—	—	—	—	—	√	√	√	√	√	√	√	√	Lower 16 bits
					—	—	—	—	—	—	—	—	—	—	—	—	—	—	—	—	Upper 16 bits
	PODCE0	R/W	$0000\ 0000_H$	32	—	√	√	√	√	√	√	√	√	√	√	√	√	√	√	√	Lower 16 bits
					—	—	—	—	—	—	—	—	—	—	—	—	—	—	—	—	Upper 16 bits
	PINV0	R/W	$0000\ 0000_H$	32	—	√	√	√	√	√	√	√	√	√	√	√	√	√	√	√	Lower 16 bits
					—	—	—	—	—	—	—	—	—	—	—	—	—	—	—	—	Upper 16 bits
	PCR0_0	R/W	$0000\ 0010_H$	32	—	—	—	√	—	—	—	√	—	√	√	√	—	√	√	√	Lower 16 bits
					—	√	—	√	√	—	√	√	—	—	—	—	√	√	√	√	Upper 16 bits
	PCR0_1	R/W	$0000\ 0010_H$	32	—	—	—	√	—	—	—	√	—	√	√	√	—	√	√	√	Lower 16 bits
					—	√	—	√	√	—	√	√	—	—	—	—	√	√	√	√	Upper 16 bits

Table 2.36 List of Registers in Port Group 0 (2/2)

Port group name	Register name	R/W	Value after reset	Access size	Bitmap																Remarks
					15	14	13	12	11	10	9	8	7	6	5	4	3	2	1	0	
0	PCR0_2	R/W	$0000\ 0010_H$	32	—	—	—	√	—	—	—	√	—	√	√	√	—	√	√	√	Lower 16 bits
					—	√	—	√	√	—	√	√	—	—	—	—	√	√	√	√	Upper 16 bits
	PCR0_3	R/W	$0000\ 0010_H$	32	—	—	—	√	—	—	—	√	—	√	√	√	—	√	√	√	Lower 16 bits
					—	√	—	√	√	—	√	√	—	√	—	—	√	√	√	√	Upper 16 bits
	PCR0_4	R/W	$0000\ 0010_H$	32	—	—	—	√	—	—	—	√	—	√	√	√	—	√	√	√	Lower 16 bits
					—	√	—	√	√	—	√	√	—	√	—	—	√	√	√	√	Upper 16 bits
	PCR0_5	R/W	$0000\ 0010_H$	32	—	—	—	√	—	—	—	√	—	√	√	√	—	√	√	√	Lower 16 bits
					—	√	—	√	√	—	√	√	—	√	—	—	√	√	√	√	Upper 16 bits
	PCR0_6	R/W	$0000\ 0010_H$	32	—	—	—	√	—	—	—	√	—	√	√	√	—	√	√	√	Lower 16 bits
					—	√	—	√	√	—	√	√	—	√	—	—	√	√	√	√	Upper 16 bits
	PCR0_7	R/W	$0000\ 0010_H$	32	—	—	—	√	—	—	—	√	—	√	√	√	—	√	√	√	Lower 16 bits
					—	√	—	√	√	—	√	√	—	√	—	—	√	√	√	√	Upper 16 bits
	PCR0_8	R/W	$0000\ 0010_H$	32	—	—	—	√	—	—	—	√	—	√	√	√	—	√	√	√	Lower 16 bits
					—	√	—	√	√	—	√	√	—	√	—	—	√	√	√	√	Upper 16 bits
	PCR0_9	R/W	$0000\ 0010_H$	32	—	—	—	√	—	—	—	√	—	√	√	√	—	—	√	√	Lower 16 bits
					—	√	—	√	√	—	√	√	—	√	—	—	√	√	√	√	Upper 16 bits
	PCR0_10	R/W	$1140\ 0000_H$	32	—	—	—	√	—	—	—	√	—	√	√	√	—	—	—	√	Lower 16 bits
					—	√	—	√	√	—	√	√	—	—	—	—	√	√	√	√	Upper 16 bits
	PCR0_11	R/W	$0000\ 0010_H$	32	—	—	—	√	—	—	—	√	—	√	√	√	—	—	—	√	Lower 16 bits
					—	√	—	√	√	—	√	√	—	—	—	—	√	√	√	√	Upper 16 bits
	PCR0_12	R/W	$0000\ 0010_H$	32	—	—	—	√	—	—	—	√	—	√	√	√	—	—	—	√	Lower 16 bits
					—	√	—	√	√	—	√	√	—	—	—	—	√	√	√	√	Upper 16 bits
	PCR0_13	R/W	$0000\ 0010_H$	32	—	—	—	√	—	—	—	√	—	√	√	√	—	—	√	√	Lower 16 bits
					—	√	—	√	√	—	√	√	—	√	—	—	√	√	√	√	Upper 16 bits
	PCR0_14	R/W	$0000\ 0010_H$	32	—	—	—	√	—	—	—	√	—	√	√	√	—	—	—	√	Lower 16 bits
					—	√	—	√	√	—	√	√	—	—	—	—	√	√	√	√	Upper 16 bits

Table 2.37 List of Registers in Port Group 1

Port group name	Register name	R/W	Value after reset	Access size	Bitmap																Remarks
					15	14	13	12	11	10	9	8	7	6	5	4	3	2	1	0	
1	P1	R/W	0000_H	16	—	—	—	—	—	—	—	—	—	—	—	√	√	√	√	√	
	PSR1	R/W	$0000\ 0000_H$	32	—	—	—	—	—	—	—	—	—	—	—	√	√	√	√	√	Lower 16 bits
					—	—	—	—	—	—	—	—	—	—	—	√	√	√	√	√	Upper 16 bits
	PPR1	R	0000_H	16	—	—	—	—	—	—	—	—	—	—	—	√	√	√	√	√	
	PM1	R/W	$FFFF_H$	16	—	—	—	—	—	—	—	—	—	—	—	√	√	√	√	√	
	PMC1	R/W	0000_H	16	—	—	—	—	—	—	—	—	—	—	—	√	√	√	√	√	
	PFC1	R/W	0000_H	16	—	—	—	—	—	—	—	—	—	—	—	√	√	√	√	√	
	PFCE1	R/W	0000_H	16	—	—	—	—	—	—	—	—	—	—	—	√	√	√	√	√	
	PNOT1	W	0000_H	16	—	—	—	—	—	—	—	—	—	—	—	√	√	√	√	√	
	PFCAE1	R/W	0000_H	16	—	—	—	—	—	—	—	—	—	—	—	√	√	√	√	√	
	PMSR1	R/W	$0000\ FFFF_H$	32	—	—	—	—	—	—	—	—	—	—	—	√	√	√	√	√	Lower 16 bits
					—	—	—	—	—	—	—	—	—	—	—	√	√	√	√	√	Upper 16 bits
	PMCSR1	R/W	$0000\ 0000_H$	32	—	—	—	—	—	—	—	—	—	—	—	√	√	√	√	√	Lower 16 bits
					—	—	—	—	—	—	—	—	—	—	—	√	√	√	√	√	Upper 16 bits
	PIBC1	R/W	0000_H	16	—	—	—	—	—	—	—	—	—	—	—	√	√	√	√	√	
	PBDC1	R/W	0000_H	16	—	—	—	—	—	—	—	—	—	—	—	√	√	√	√	√	
	PIPC1	R/W	0000_H	16	—	—	—	—	—	—	—	—	—	—	—	√	√	—	—	—	
	PU1	R/W	0000_H	16	—	—	—	—	—	—	—	—	—	—	—	√	√	√	√	√	
	PD1	R/W	0000_H	16	—	—	—	—	—	—	—	—	—	—	—	√	√	√	√	√	
	PODC1	R/W	$0000\ 0000_H$	32	—	—	—	—	—	—	—	—	—	—	—	√	√	√	√	√	Lower 16 bits
					—	—	—	—	—	—	—	—	—	—	—	—	—	—	—	—	Upper 16 bits
	PDSC1	R/W	$0000\ 0000_H$	32	—	—	—	—	—	—	—	—	—	—	—	√	√	√	√	√	Lower 16 bits
					—	—	—	—	—	—	—	—	—	—	—	—	—	—	—	—	Upper 16 bits
	PUCC1	R/W	$0000\ 0000_H$	32	—	—	—	—	—	—	—	—	—	—	—	√	√	√	√	√	Lower 16 bits
					—	—	—	—	—	—	—	—	—	—	—	—	—	—	—	—	Upper 16 bits
	PISA1	R/W	0000_H	16	—	—	—	—	—	—	—	—	—	—	—	√	√	√	√	—	
	PPROTS1	R	$0000\ 0000_H$	32	—	—	—	—	—	—	—	—	—	—	—	—	—	—	—	√	Lower 16 bits
					—	—	—	—	—	—	—	—	—	—	—	—	—	—	—	—	Upper 16 bits
	PPCMD1	W	$0000\ 0000_H$	32	—	—	—	—	—	—	—	—	√	√	√	√	√	√	√	√	Lower 16 bits
					—	—	—	—	—	—	—	—	—	—	—	—	—	—	—	—	Upper 16 bits
	PODCE1	R/W	$0000\ 0000_H$	32	—	—	—	—	—	—	—	—	—	—	—	√	√	√	√	√	Lower 16 bits
					—	—	—	—	—	—	—	—	—	—	—	—	—	—	—	—	Upper 16 bits
	PINV1	R/W	$0000\ 0000_H$	32	—	—	—	—	—	—	—	—	—	—	—	√	√	√	√	√	Lower 16 bits
					—	—	—	—	—	—	—	—	—	—	—	—	—	—	—	—	Upper 16 bits
	PCR1_0	R/W	$0000\ 0010_H$	32	—	—	—	√	—	—	—	√	—	√	—	√	—	√	√	√	Lower 16 bits
					—	√	—	√	√	—	√	√	—	—	—	—	√	√	√	√	Upper 16 bits
	PCR1_1	R/W	$0000\ 0010_H$	32	—	—	—	√	—	—	—	√	—	√	—	√	—	√	√	√	Lower 16 bits
					—	√	—	√	√	—	√	√	—	√	—	—	√	√	√	√	Upper 16 bits
	PCR1_2	R/W	$0000\ 0010_H$	32	—	—	—	√	—	—	—	√	—	√	—	√	—	√	√	√	Lower 16 bits
					—	√	—	√	√	—	√	√	—	√	—	—	√	√	√	√	Upper 16 bits
	PCR1_3	R/W	$0000\ 0010_H$	32	—	—	—	√	—	—	—	√	—	√	√	√	—	√	√	√	Lower 16 bits
					—	√	—	√	√	—	√	√	—	√	—	—	√	√	√	√	Upper 16 bits
	PCR1_4	R/W	$0000\ 0010_H$	32	—	—	—	√	—	—	—	√	—	√	√	√	—	√	√	√	Lower 16 bits
					—	√	—	√	√	—	√	√	—	√	—	—	√	√	√	√	Upper 16 bits

Table 2.38 List of Registers in Port Group 2 (1/2)

Port group name	Register name	R/W	Value after reset	Access size	Bitmap																Remarks
					15	14	13	12	11	10	9	8	7	6	5	4	3	2	1	0	
2	P2	R/W	0000_H	16	√	√	√	√	√	√	√	√	√	√	√	√	√	√	√	√	
	PSR2	R/W	$0000\ 0000_H$	32	√	√	√	√	√	√	√	√	√	√	√	√	√	√	√	√	Lower 16 bits
					√	√	√	√	√	√	√	√	√	√	√	√	√	√	√	√	Upper 16 bits
	PPR2	R	0000_H	16	√	√	√	√	√	√	√	√	√	√	√	√	√	√	√	√	
	PM2	R/W	$FFFF_H$	16	√	√	√	√	√	√	√	√	√	√	√	√	√	√	√	√	
	PMC2	R/W	0000_H	16	√	√	√	√	√	√	√	√	√	√	√	√	√	√	√	√	
	PFC2	R/W	0000_H	16	√	√	√	√	√	√	√	√	√	√	√	√	√	√	√	√	
	PFCE2	R/W	0000_H	16	√	√	√	√	√	√	√	√	√	√	√	√	√	√	√	√	
	PNOT2	W	0000_H	16	√	√	√	√	√	√	√	√	√	√	√	√	√	√	√	√	
	PFCAE2	R/W	0000_H	16	√	√	√	√	√	√	√	√	√	√	√	√	√	√	√	—	
	PMSR2	R/W	$0000\ FFFF_H$	32	√	√	√	√	√	√	√	√	√	√	√	√	√	√	√	√	Lower 16 bits
					√	√	√	√	√	√	√	√	√	√	√	√	√	√	√	√	Upper 16 bits
	PMCSR2	R/W	$0000\ 0000_H$	32	√	√	√	√	√	√	√	√	√	√	√	√	√	√	√	√	Lower 16 bits
					√	√	√	√	√	√	√	√	√	√	√	√	√	√	√	√	Upper 16 bits
	PIBC2	R/W	0000_H	16	√	√	√	√	√	√	√	√	√	√	√	√	√	√	√	√	
	PBDC2	R/W	0000_H	16	√	√	√	√	√	√	√	√	√	√	√	√	√	√	√	√	
	PIPC2	R/W	0000_H	16	—	—	—	√	—	—	√	√	√	√	√	—	√	√	√	—	
	PU2	R/W	0000_H	16	√	√	√	√	√	√	√	√	√	√	√	√	√	√	√	√	
	PD2	R/W	0000_H	16	√	√	√	√	√	√	√	√	√	√	√	√	√	√	√	√	
	PODC2	R/W	$0000\ 0000_H$	32	√	√	√	√	√	√	√	√	√	√	√	√	√	√	√	√	Lower 16 bits
					—	—	—	—	—	—	—	—	—	—	—	—	—	—	—	—	Upper 16 bits
	PDSC2	R/W	$0000\ 0000_H$	32	√	√	√	√	√	√	√	√	√	√	√	√	√	√	√	√	Lower 16 bits
					—	—	—	—	—	—	—	—	—	—	—	—	—	—	—	—	Upper 16 bits
	PUCC2	R/W	$0000\ 0000_H$	32	√	√	√	√	√	√	√	√	√	√	√	√	√	√	√	√	Lower 16 bits
					—	—	—	—	—	—	—	—	—	—	—	—	—	—	—	—	Upper 16 bits
	PISA2	R/W	0000_H	16	—	—	—	√	—	—	—	—	√	—	√	—	—	√	√	√	
	PPROTS2	R	$0000\ 0000_H$	32	—	—	—	—	—	—	—	—	—	—	—	—	—	—	—	√	Lower 16 bits
					—	—	—	—	—	—	—	—	—	—	—	—	—	—	—	—	Upper 16 bits
	PPCMD2	W	$0000\ 0000_H$	32	—	—	—	—	—	—	—	—	√	√	√	√	√	√	√	√	Lower 16 bits
					—	—	—	—	—	—	—	—	—	—	—	—	—	—	—	—	Upper 16 bits
	PODCE2	R/W	$0000\ 0000_H$	32	√	√	√	√	√	√	√	√	√	√	√	√	√	√	√	√	Lower 16 bits
					—	—	—	—	—	—	—	—	—	—	—	—	—	—	—	—	Upper 16 bits
	PINV2	R/W	$0000\ 0000_H$	32	√	√	√	√	√	√	√	√	√	√	√	√	√	√	√	√	Lower 16 bits
					—	—	—	—	—	—	—	—	—	—	—	—	—	—	—	—	Upper 16 bits
	PCR2_0	R/W	$0000\ 0010_H$	32	—	—	—	√	—	—	—	√	—	√	—	√	—	—	√	√	Lower 16 bits
					—	√	—	√	√	—	√	√	—	√	—	—	√	√	√	√	Upper 16 bits
	PCR2_1	R/W	$0000\ 0010_H$	32	—	—	—	√	—	—	—	√	—	√	√	√	—	√	√	√	Lower 16 bits
					—	√	—	√	√	—	√	√	—	√	—	—	√	√	√	√	Upper 16 bits
	PCR2_2	R/W	$0000\ 0010_H$	32	—	—	—	√	—	—	—	√	—	√	√	√	—	√	√	√	Lower 16 bits
					—	√	—	√	√	—	√	√	—	√	—	—	√	√	√	√	Upper 16 bits
	PCR2_3	R/W	$0000\ 0010_H$	32	—	—	—	√	—	—	—	√	—	√	√	√	—	√	√	√	Lower 16 bits
					—	√	—	√	√	—	√	√	—	—	—	—	√	√	√	√	Upper 16 bits
	PCR2_4	R/W	$0000\ 0010_H$	32	—	—	—	√	—	—	—	√	—	√	—	√	—	√	√	√	Lower 16 bits
					—	√	—	√	√	—	√	√	—	—	—	—	√	√	√	√	Upper 16 bits
	PCR2_5	R/W	$0000\ 0010_H$	32	—	—	—	√	—	—	—	√	—	√	√	√	—	√	√	√	Lower 16 bits
					—	√	—	√	√	—	√	√	—	√	—	—	√	√	√	√	Upper 16 bits
	PCR2_6	R/W	$0000\ 0010_H$	32	—	—	—	√	—	—	—	√	—	√	√	√	—	√	√	√	Lower 16 bits
					—	√	—	√	√	—	√	√	—	—	—	—	√	√	√	√	Upper 16 bits

Table 2.38 List of Registers in Port Group 2 (2/2)

Port group name	Register name	R/W	Value after reset	Access size	Bitmap																Remarks
					15	14	13	12	11	10	9	8	7	6	5	4	3	2	1	0	
2	PCR2_7	R/W	$0000\ 0010_H$	32	—	—	—	√	—	—	—	√	—	√	√	√	—	√	√	√	Lower 16 bits
					—	√	—	√	√	—	√	√	—	√	—	—	√	√	√	√	Upper 16 bits
	PCR2_8	R/W	$0000\ 0010_H$	32	—	—	—	√	—	—	—	√	—	√	√	√	—	√	√	√	Lower 16 bits
					—	√	—	√	√	—	√	√	—	—	—	—	√	√	√	√	Upper 16 bits
	PCR2_9	R/W	$0000\ 0010_H$	32	—	—	—	√	—	—	—	√	—	√	√	√	—	√	√	√	Lower 16 bits
					—	√	—	√	√	—	√	√	—	—	—	—	√	√	√	√	Upper 16 bits
	PCR2_10	R/W	$0000\ 0010_H$	32	—	—	—	√	—	—	—	√	—	√	—	√	—	√	√	√	Lower 16 bits
					—	√	—	√	√	—	√	√	—	—	—	—	√	√	√	√	Upper 16 bits
	PCR2_11	R/W	$0000\ 0010_H$	32	—	—	—	√	—	—	—	√	—	√	—	√	—	√	√	√	Lower 16 bits
					—	√	—	√	√	—	√	√	—	—	—	—	√	√	√	√	Upper 16 bits
	PCR2_12	R/W	$0000\ 0010_H$	32	—	—	—	√	—	—	—	√	—	√	√	√	—	√	√	√	Lower 16 bits
					—	√	—	√	√	—	√	√	—	√	—	—	√	√	√	√	Upper 16 bits
	PCR2_13	R/W	$0000\ 0010_H$	32	—	—	—	√	—	—	—	√	—	√	—	√	—	√	√	√	Lower 16 bits
					—	√	—	√	√	—	√	√	—	—	—	—	√	√	√	√	Upper 16 bits
	PCR2_14	R/W	$0000\ 0010_H$	32	—	—	—	√	—	—	—	√	—	√	—	√	—	√	√	√	Lower 16 bits
					—	√	—	√	√	—	√	√	—	—	—	—	√	√	√	√	Upper 16 bits
	PCR2_15	R/W	$0000\ 0010_H$	32	—	—	—	√	—	—	—	√	—	√	—	√	—	√	√	√	Lower 16 bits
					—	√	—	√	√	—	√	√	—	—	—	—	√	√	√	√	Upper 16 bits

Table 2.39 List of Registers in Port Group 3 (1/2)

Port group name	Register name	R/W	Value after reset	Access size	Bitmap																Remarks
					15	14	13	12	11	10	9	8	7	6	5	4	3	2	1	0	
3	P3	R/W	0000_H	16	—	√	√	√	√	√	√	√	√	√	√	√	√	√	√	√	
	PSR3	R/W	$0000\ 0000_H$	32	—	√	√	√	√	√	√	√	√	√	√	√	√	√	√	√	Lower 16 bits
					—	√	√	√	√	√	√	√	√	√	√	√	√	√	√	√	Upper 16 bits
	PPR3	R	0000_H	16	—	√	√	√	√	√	√	√	√	√	√	√	√	√	√	√	
	PM3	R/W	$FFFF_H$	16	—	√	√	√	√	√	√	√	√	√	√	√	√	√	√	√	
	PMC3	R/W	0000_H	16	—	√	√	√	√	√	√	√	√	√	√	√	√	√	√	√	
	PFC3	R/W	0000_H	16	—	√	√	√	√	√	√	√	√	√	√	√	√	√	√	√	
	PFCE3	R/W	0000_H	16	—	√	√	√	√	—	√	√	√	√	√	√	√	√	√	√	
	PNOT3	W	0000_H	16	—	√	√	√	√	√	√	√	√	√	√	√	√	√	√	√	
	PFCAE3	R/W	0000_H	16	—	√	√	√	√	√	√	√	√	√	√	√	√	√	√	√	
	PMSR3	R/W	$0000\ FFFF_H$	32	—	√	√	√	√	√	√	√	√	√	√	√	√	√	√	√	Lower 16 bits
					—	√	√	√	√	√	√	√	√	√	√	√	√	√	√	√	Upper 16 bits
	PMCSR3	R/W	$0000\ 0000_H$	32	—	√	√	√	√	√	√	√	√	√	√	√	√	√	√	√	Lower 16 bits
					—	√	√	√	√	√	√	√	√	√	√	√	√	√	√	√	Upper 16 bits
	PIBC3	R/W	0000_H	16	—	√	√	√	√	√	√	√	√	√	√	√	√	√	√	√	
	PBDC3	R/W	0000_H	16	—	√	√	√	√	√	√	√	√	√	√	√	√	√	√	√	
	PIPC3	R/W	0000_H	16	—	√	√	√	√	√	√	√	√	—	—	—	—	√	√	√	
	PU3	R/W	0000_H	16	—	√	√	√	√	√	√	√	√	√	√	√	√	√	√	√	
	PD3	R/W	0000_H	16	—	√	√	√	√	√	√	√	√	√	√	√	√	√	√	√	
	PODC3	R/W	$0000\ 0000_H$	32	—	√	√	√	√	√	√	√	√	√	√	√	√	√	√	√	Lower 16 bits
					—	—	—	—	—	—	—	—	—	—	—	—	—	—	—	—	Upper 16 bits
	PDSC3	R/W	$0000\ 0000_H$	32	—	√	√	√	√	√	√	√	√	√	√	√	√	√	√	√	Lower 16 bits
					—	—	—	—	—	—	—	—	—	—	—	—	—	—	—	—	Upper 16 bits
	PUCC3	R/W	$0000\ 0000_H$	32	—	√	√	√	√	√	√	√	√	√	√	√	√	√	√	√	Lower 16 bits
					—	—	—	—	—	—	—	—	—	—	—	—	—	—	—	—	Upper 16 bits
	PISA3	R/W	0000_H	16	—	√	—	—	—	—	—	—	—	—	—	—	—	—	√	√	
	PPROTS3	R	$0000\ 0000_H$	32	—	—	—	—	—	—	—	—	—	—	—	—	—	—	—	√	Lower 16 bits
					—	—	—	—	—	—	—	—	—	—	—	—	—	—	—	—	Upper 16 bits
	PPCMD3	W	$0000\ 0000_H$	32	—	—	—	—	—	—	—	—	√	√	√	√	√	√	√	√	Lower 16 bits
					—	—	—	—	—	—	—	—	—	—	—	—	—	—	—	—	Upper 16 bits
	PODCE3	R/W	$0000\ 0000_H$	32	—	√	√	√	√	√	√	√	√	√	√	√	√	√	√	√	Lower 16 bits
					—	—	—	—	—	—	—	—	—	—	—	—	—	—	—	—	Upper 16 bits
	PINV3	R/W	$0000\ 0000_H$	32	—	√	√	√	√	√	√	√	√	√	√	√	√	√	√	√	Lower 16 bits
					—	—	—	—	—	—	—	—	—	—	—	—	—	—	—	—	Upper 16 bits
	PCR3_0	R/W	$0000\ 0010_H$	32	—	—	—	√	—	—	—	√	—	√	√	√	—	√	√	√	Lower 16 bits
					—	√	—	√	√	—	√	√	—	√	—	—	√	√	√	√	Upper 16 bits
	PCR3_1	R/W	$0000\ 0010_H$	32	—	—	—	√	—	—	—	√	—	√	√	√	—	√	√	√	Lower 16 bits
					—	√	—	√	√	—	√	√	—	√	—	—	√	√	√	√	Upper 16 bits
	PCR3_2	R/W	$0000\ 0010_H$	32	—	—	—	√	—	—	—	√	—	√	√	√	—	√	√	√	Lower 16 bits
					—	√	—	√	√	—	√	√	—	—	—	—	√	√	√	√	Upper 16 bits
	PCR3_3	R/W	$0000\ 0010_H$	32	—	—	—	√	—	—	—	√	—	√	—	√	—	√	√	√	Lower 16 bits
					—	√	—	√	√	—	√	√	—	—	—	—	√	√	√	√	Upper 16 bits
	PCR3_4	R/W	$0000\ 0010_H$	32	—	—	—	√	—	—	—	√	—	√	—	√	—	√	√	√	Lower 16 bits
					—	√	—	√	√	—	√	√	—	—	—	—	√	√	√	√	Upper 16 bits
	PCR3_5	R/W	$0000\ 0010_H$	32	—	—	—	√	—	—	—	√	—	√	—	√	—	√	√	√	Lower 16 bits
					—	√	—	√	√	—	√	√	—	—	—	—	√	√	√	√	Upper 16 bits
	PCR3_6	R/W	$0000\ 0010_H$	32	—	—	—	√	—	—	—	√	—	√	—	√	—	√	√	√	Lower 16 bits
					—	√	—	√	√	—	√	√	—	—	—	—	√	√	√	√	Upper 16 bits

Table 2.39 List of Registers in Port Group 3 (2/2)

Port group name	Register name	R/W	Value after reset	Access size	Bitmap																Remarks
					15	14	13	12	11	10	9	8	7	6	5	4	3	2	1	0	
3	PCR3_7	R/W	$0000\ 0010_H$	32	—	—	—	√	—	—	—	√	—	√	√	√	—	√	√	√	Lower 16 bits
					—	√	—	√	√	—	√	√	—	—	—	—	√	√	√	√	Upper 16 bits
	PCR3_8	R/W	$0000\ 0010_H$	32	—	—	—	√	—	—	—	√	—	√	√	√	—	√	√	√	Lower 16 bits
					—	√	—	√	√	—	√	√	—	—	—	—	√	√	√	√	Upper 16 bits
	PCR3_9	R/W	$0000\ 0010_H$	32	—	—	—	√	—	—	—	√	—	√	√	√	—	√	√	√	Lower 16 bits
					—	√	—	√	√	—	√	√	—	—	—	—	√	√	√	√	Upper 16 bits
	PCR3_10	R/W	$0000\ 0010_H$	32	—	—	—	√	—	—	—	√	—	√	√	√	—	√	—	√	Lower 16 bits
					—	√	—	√	√	—	√	√	—	—	—	—	√	√	√	√	Upper 16 bits
	PCR3_11	R/W	$0000\ 0010_H$	32	—	—	—	√	—	—	—	√	—	√	√	√	—	√	√	√	Lower 16 bits
					—	√	—	√	√	—	√	√	—	—	—	—	√	√	√	√	Upper 16 bits
	PCR3_12	R/W	$0000\ 0010_H$	32	—	—	—	√	—	—	—	√	—	√	√	√	—	√	√	√	Lower 16 bits
					—	√	—	√	√	—	√	√	—	—	—	—	√	√	√	√	Upper 16 bits
	PCR3_13	R/W	$0000\ 0010_H$	32	—	—	—	√	—	—	—	√	—	√	√	√	—	√	√	√	Lower 16 bits
					—	√	—	√	√	—	√	√	—	—	—	—	√	√	√	√	Upper 16 bits
	PCR3_14	R/W	$0000\ 0010_H$	32	—	—	—	√	—	—	—	√	—	√	√	√	—	√	√	√	Lower 16 bits
					—	√	—	√	√	—	√	√	—	√	—	—	√	√	√	√	Upper 16 bits

Table 2.40 List of Registers in Port Group 4

Port group name	Register name	R/W	Value after reset	Access size	Bitmap																Remarks
					15	14	13	12	11	10	9	8	7	6	5	4	3	2	1	0	
4	P4	R/W	0000_H	16	—	√	√	√	√	√	√	√	√	√	√	√	√	√	√	√	
	PSR4	R/W	$0000\ 0000_H$	32	—	√	√	√	√	√	√	√	√	√	√	√	√	√	√	√	Lower 16 bits
					—	√	√	√	√	√	√	√	√	√	√	√	√	√	√	√	Upper 16 bits
	PPR4	R	0000_H	16	—	√	√	√	√	√	√	√	√	√	√	√	√	√	√	√	
	PM4	R/W	$FFFF_H$	16	—	√	√	√	√	√	√	√	√	√	√	√	√	√	√	√	
	PMC4	R/W	0000_H	16	—	√	√	√	√	√	√	√	√	√	√	√	√	√	√	√	
	PFC4	R/W	0000_H	16	—	√	√	√	√	√	√	√	√	√	√	√	√	√	√	√	
	PFCE4	R/W	0000_H	16	—	√	√	√	√	√	√	√	√	√	√	√	√	√	√	√	
	PNOT4	W	0000_H	16	—	√	√	√	√	√	√	√	√	√	√	√	√	√	√	√	
	PFCAE4	R/W	0000_H	16	—	√	√	√	√	√	√	√	√	√	√	√	√	√	√	√	
	PMSR4	R/W	$0000\ FFFF_H$	32	—	√	√	√	√	√	√	√	√	√	√	√	√	√	√	√	Lower 16 bits
					—	√	√	√	√	√	√	√	√	√	√	√	√	√	√	√	Upper 16 bits
	PMCSR4	R/W	$0000\ 0000_H$	32	—	√	√	√	√	√	√	√	√	√	√	√	√	√	√	√	Lower 16 bits
					—	√	√	√	√	√	√	√	√	√	√	√	√	√	√	√	Upper 16 bits
	PIBC4	R/W	0000_H	16	—	√	√	√	√	√	√	√	√	√	√	√	√	√	√	√	
	PBDC4	R/W	0000_H	16	—	√	√	√	√	√	√	√	√	√	√	√	√	√	√	√	
	PIPC4	R/W	0000_H	16	—	—	—	—	—	—	—	—	—	√	√	√	√	√	√	√	
	PU4	R/W	0000_H	16	—	√	√	√	√	√	√	√	√	√	√	√	√	√	√	√	
	PD4	R/W	0000_H	16	—	√	√	√	√	√	√	√	√	√	√	√	√	√	√	√	
	PODC4	R/W	$0000\ 0000_H$	32	—	√	√	√	√	√	√	√	√	√	√	√	√	√	√	√	Lower 16 bits
					—	—	—	—	—	—	—	—	—	—	—	—	—	—	—	—	Upper 16 bits
	PDSC4	R/W	$0000\ 0000_H$	32	—	√	√	√	√	√	√	√	√	√	√	√	√	√	√	√	Lower 16 bits
					—	—	—	—	—	—	—	—	—	—	—	—	—	—	—	—	Upper 16 bits
	PUCC4	R/W	$0000\ 0000_H$	32	—	√	√	√	√	√	√	√	√	√	√	√	√	√	√	√	Lower 16 bits
					—	—	—	—	—	—	—	—	—	—	—	—	—	—	—	—	Upper 16 bits
	PISA4	R/W	0000_H	16	—	—	√	√	—	√	√	—	—	√	√	√	√	√	√	√	
	PPROTS4	R	$0000\ 0000_H$	32	—	—	—	—	—	—	—	—	—	—	—	—	—	—	—	√	Lower 16 bits
					—	—	—	—	—	—	—	—	—	—	—	—	—	—	—	—	Upper 16 bits
	PPCMD4	W	$0000\ 0000_H$	32	—	—	—	—	—	—	—	—	√	√	√	√	√	√	√	√	Lower 16 bits
					—	—	—	—	—	—	—	—	—	—	—	—	—	—	—	—	Upper 16 bits
	PODCE4	R/W	$0000\ 0000_H$	32	—	√	√	√	√	√	√	√	√	√	√	√	√	√	√	√	Lower 16 bits
					—	—	—	—	—	—	—	—	—	—	—	—	—	—	—	—	Upper 16 bits
	PINV4	R/W	$0000\ 0000_H$	32	—	√	√	√	√	√	√	√	√	√	√	√	√	√	√	√	Lower 16 bits
					—	—	—	—	—	—	—	—	—	—	—	—	—	—	—	—	Upper 16 bits
	PCR4_0	R/W	$0000\ 0010_H$	32	—	—	—	√	—	—	—	√	—	√	√	√	—	√	√	√	Lower 16 bits
					—	√	—	√	√	—	√	√	—	√	—	—	√	√	√	√	Upper 16 bits
	PCR4_1	R/W	$0000\ 0010_H$	32	—	—	—	√	—	—	—	√	—	√	√	√	—	√	√	√	Lower 16 bits
					—	√	—	√	√	—	√	√	—	√	—	—	√	√	√	√	Upper 16 bits
	PCR4_2	R/W	$0000\ 0010_H$	32	—	—	—	√	—	—	—	√	—	√	√	√	—	√	√	√	Lower 16 bits
					—	√	—	√	√	—	√	√	—	√	—	—	√	√	√	√	Upper 16 bits
	PCR4_3	R/W	$0000\ 0010_H$	32	—	—	—	√	—	—	—	√	—	√	√	√	—	√	√	√	Lower 16 bits
					—	√	—	√	√	—	√	√	—	√	—	—	√	√	√	√	Upper 16 bits
	PCR4_4	R/W	$0000\ 0010_H$	32	—	—	—	√	—	—	—	√	—	√	√	√	—	√	√	√	Lower 16 bits
					—	√	—	√	√	—	√	√	—	√	—	—	√	√	√	√	Upper 16 bits
	PCR4_5	R/W	$0000\ 0010_H$	32	—	—	—	√	—	—	—	√	—	√	√	√	—	√	√	√	Lower 16 bits
					—	√	—	√	√	—	√	√	—	√	—	—	√	√	√	√	Upper 16 bits
	PCR4_6	R/W	$0000\ 0010_H$	32	—	—	—	√	—	—	—	√	—	√	√	√	—	√	√	√	Lower 16 bits
					—	√	—	√	√	—	√	√	—	√	—	—	√	√	√	√	Upper 16 bits

Table 2.40 List of Registers in Port Group 4

Port group name	Register name	R/W	Value after reset	Access size	Bitmap																Remarks
					15	14	13	12	11	10	9	8	7	6	5	4	3	2	1	0	
4	PCR4_7	R/W	$0000\ 0010_H$	32	—	—	—	√	—	—	—	√	—	√	—	√	—	√	√	√	Lower 16 bits
					—	√	—	√	√	—	√	√	—	—	—	—	√	√	√	√	Upper 16 bits
	PCR4_8	R/W	$0000\ 0010_H$	32	—	—	—	√	—	—	—	√	—	√	—	√	—	√	√	√	Lower 16 bits
					—	√	—	√	√	—	√	√	—	—	—	—	√	√	√	√	Upper 16 bits
	PCR4_9	R/W	$0000\ 0010_H$	32	—	—	—	√	—	—	—	√	—	√	—	√	—	√	√	√	Lower 16 bits
					—	√	—	√	√	—	√	√	—	√	—	—	√	√	√	√	Upper 16 bits
	PCR4_10	R/W	$0000\ 0010_H$	32	—	—	—	√	—	—	—	√	—	√	—	√	—	√	√	√	Lower 16 bits
					—	√	—	√	√	—	√	√	—	√	—	—	√	√	√	√	Upper 16 bits
	PCR4_11	R/W	$0000\ 0010_H$	32	—	—	—	√	—	—	—	√	—	√	—	√	—	√	√	√	Lower 16 bits
					—	√	—	√	√	—	√	√	—	—	—	—	√	√	√	√	Upper 16 bits
	PCR4_12	R/W	$0000\ 0010_H$	32	—	—	—	√	—	—	—	√	—	√	—	√	—	√	√	√	Lower 16 bits
					—	√	—	√	√	—	√	√	—	√	—	—	√	√	√	√	Upper 16 bits
	PCR4_13	R/W	$0000\ 0010_H$	32	—	—	—	√	—	—	—	√	—	√	—	√	—	√	√	√	Lower 16 bits
					—	√	—	√	√	—	√	√	—	√	—	—	√	√	√	√	Upper 16 bits
	PCR4_14	R/W	$0000\ 0010_H$	32	—	—	—	√	—	—	—	√	—	√	—	√	—	√	√	√	Lower 16 bits
					—	√	—	√	√	—	√	√	—	—	—	—	√	√	√	√	Upper 16 bits

Table 2.41 List of Registers in Port Group 5 (1/2)

Port group name	Register name	R/W	Value after reset	Access size	Bitmap																Remarks
					15	14	13	12	11	10	9	8	7	6	5	4	3	2	1	0	
5	P5	R/W	0000_H	16	√	√	√	√	√	√	√	√	√	√	√	√	√	√	√	√	
	PSR5	R/W	$0000\ 0000_H$	32	√	√	√	√	√	√	√	√	√	√	√	√	√	√	√	√	Lower 16 bits
					√	√	√	√	√	√	√	√	√	√	√	√	√	√	√	√	Upper 16 bits
	PPR5	R	0000_H	16	√	√	√	√	√	√	√	√	√	√	√	√	√	√	√	√	
	PM5	R/W	$FFFF_H$	16	√	√	√	√	√	√	√	√	√	√	√	√	√	√	√	√	
	PMC5	R/W	0000_H	16	√	√	√	√	√	√	√	√	√	√	√	√	√	√	√	√	
	PFC5	R/W	0000_H	16	√	√	√	√	√	√	√	√	√	√	√	√	—	√	√	√	
	PFCE5	R/W	0000_H	16	—	√	√	√	√	√	√	√	√	√	√	√	√	√	√	√	
	PNOT5	W	0000_H	16	√	√	√	√	√	√	√	√	√	√	√	√	√	√	√	√	
	PFCAE5	R/W	0000_H	16	√	√	√	—	—	√	√	√	√	√	√	√	√	√	√	√	
	PMSR5	R/W	$0000\ FFFF_H$	32	√	√	√	√	√	√	√	√	√	√	√	√	√	√	√	√	Lower 16 bits
					√	√	√	√	√	√	√	√	√	√	√	√	√	√	√	√	Upper 16 bits
	PMCSR5	R/W	$0000\ 0000_H$	32	√	√	√	√	√	√	√	√	√	√	√	√	√	√	√	√	Lower 16 bits
					√	√	√	√	√	√	√	√	√	√	√	√	√	√	√	√	Upper 16 bits
	PIBC5	R/W	0000_H	16	√	√	√	√	√	√	√	√	√	√	√	√	√	√	√	√	
	PBDC5	R/W	0000_H	16	√	√	√	√	√	√	√	√	√	√	√	√	√	√	√	√	
	PIPC5	R/W	0000_H	16	—	√	√	√	√	√	√	√	√	√	√	√	—	√	√	—	
	PU5	R/W	0000_H	16	√	√	√	√	√	√	√	√	√	√	√	√	√	√	√	√	
	PD5	R/W	0000_H	16	√	√	√	√	√	√	√	√	√	√	√	√	√	√	√	√	
	PODC5	R/W	$0000\ 0000_H$	32	√	√	√	√	√	√	√	√	√	√	√	√	√	√	√	√	Lower 16 bits
					—	—	—	—	—	—	—	—	—	—	—	—	—	—	—	—	Upper 16 bits
	PDSC5	R/w	$0000\ 0000_H$	32	√	√	√	√	√	√	√	√	√	√	√	√	√	√	√	√	Lower 16 bits
					—	—	—	—	—	—	—	—	—	—	—	—	—	—	—	—	Upper 16 bits
	PUCC5	R/W	$0000\ 0000_H$	32	√	√	√	√	√	√	√	√	√	√	√	√	√	√	√	√	Lower 16 bits
					—	—	—	—	—	—	—	—	—	—	—	—	—	—	—	—	Upper 16 bits
	PPROTS5	R	$0000\ 0000_H$	32	—	—	—	—	—	—	—	—	—	—	—	—	—	—	—	√	Lower 16 bits
					—	—	—	—	—	—	—	—	—	—	—	—	—	—	—	—	Upper 16 bits
	PPCMD5	W	$0000\ 0000_H$	32	—	—	—	—	—	—	—	—	√	√	√	√	√	√	√	√	Lower 16 bits
					—	—	—	—	—	—	—	—	—	—	—	—	—	—	—	—	Upper 16 bits
	PODCE5	R/W	$0000\ 0000_H$	32	√	√	√	√	√	√	√	√	√	√	√	√	√	√	√	√	Lower 16 bits
					—	—	—	—	—	—	—	—	—	—	—	—	—	—	—	—	Upper 16 bits
	PINV5	R/W	$0000\ 0000_H$	32	√	√	√	√	√	√	√	√	√	√	√	√	√	√	√	√	Lower 16 bits
					—	—	—	—	—	—	—	—	—	—	—	—	—	—	—	—	Upper 16 bits
	PCR5_0	R/W	$0000\ 0010_H$	32	—	—	—	√	—	—	—	√	—	√	—	√	—	√	√	√	Lower 16 bits
					—	√	—	√	√	—	√	√	—	—	—	—	√	√	√	√	Upper 16 bits
	PCR5_1	R/W	$0000\ 0010_H$	32	—	—	—	√	—	—	—	√	—	√	√	√	—	√	√	√	Lower 16 bits
					—	√	—	√	√	—	√	√	—	—	—	—	√	√	√	√	Upper 16 bits
	PCR5_2	R/W	$0000\ 0010_H$	32	—	—	—	√	—	—	—	√	—	√	√	√	—	√	√	√	Lower 16 bits
					—	√	—	√	√	—	√	√	—	—	—	—	√	√	√	√	Upper 16 bits
	PCR5_3	R/W	$0000\ 0010_H$	32	—	—	—	√	—	—	—	√	—	√	—	√	—	√	√	√	Lower 16 bits
					—	√	—	√	√	—	√	√	—	—	—	—	√	√	√	√	Upper 16 bits
	PCR5_4	R/W	$0000\ 0010_H$	32	—	—	—	√	—	—	—	√	—	√	√	√	—	√	√	√	Lower 16 bits
					—	√	—	√	√	—	√	√	—	—	—	—	√	√	√	√	Upper 16 bits
	PCR5_5	R/W	$0000\ 0010_H$	32	—	—	—	√	—	—	—	√	—	√	√	√	—	√	√	√	Lower 16 bits
					—	√	—	√	√	—	√	√	—	—	—	—	√	√	√	√	Upper 16 bits
	PCR5_6	R/W	$0000\ 0010_H$	32	—	—	—	√	—	—	—	√	—	√	√	√	—	√	√	√	Lower 16 bits
					—	√	—	√	√	—	√	√	—	—	—	—	√	√	√	√	Upper 16 bits

Table 2.41 List of Registers in Port Group 5 (2/2)

Port group name	Register name	R/W	Value after reset	Access size	Bitmap																Remarks
					15	14	13	12	11	10	9	8	7	6	5	4	3	2	1	0	
5	PCR5_7	R/W	$0000\ 0010_H$	32	—	—	—	√	—	—	—	√	—	√	√	√	—	√	√	√	Lower 16 bits
					—	√	—	√	√	—	√	√	—	—	—	—	√	√	√	√	Upper 16 bits
	PCR5_8	R/W	$0000\ 0010_H$	32	—	—	—	√	—	—	—	√	—	√	√	√	—	√	√	√	Lower 16 bits
					—	√	—	√	√	—	√	√	—	—	—	—	√	√	√	√	Upper 16 bits
	PCR5_9	R/W	$0000\ 0010_H$	32	—	—	—	√	—	—	—	√	—	√	√	√	—	√	√	√	Lower 16 bits
					—	√	—	√	√	—	√	√	—	—	—	—	√	√	√	√	Upper 16 bits
	PCR5_10	R/W	$0000\ 0010_H$	32	—	—	—	√	—	—	—	√	—	√	√	√	—	√	√	√	Lower 16 bits
					—	√	—	√	√	—	√	√	—	—	—	—	√	√	√	√	Upper 16 bits
	PCR5_11	R/W	$0000\ 0010_H$	32	—	—	—	√	—	—	—	√	—	√	√	√	—	—	√	√	Lower 16 bits
					—	√	—	√	√	—	√	√	—	—	—	—	√	√	√	√	Upper 16 bits
	PCR5_12	R/W	$0000\ 0010_H$	32	—	—	—	√	—	—	—	√	—	√	√	√	—	—	√	√	Lower 16 bits
					—	√	—	√	√	—	√	√	—	—	—	—	√	√	√	√	Upper 16 bits
	PCR5_13	R/W	$0000\ 0010_H$	32	—	—	—	√	—	—	—	√	—	√	√	√	—	√	√	√	Lower 16 bits
					—	√	—	√	√	—	√	√	—	—	—	—	√	√	√	√	Upper 16 bits
	PCR5_14	R/W	$0000\ 0010_H$	32	—	—	—	√	—	—	—	√	—	√	√	√	—	√	√	√	Lower 16 bits
					—	√	—	√	√	—	√	√	—	—	—	—	√	√	√	√	Upper 16 bits
	PCR5_15	R/W	$0000\ 0010_H$	32	—	—	—	√	—	—	—	√	—	√	—	√	—	√	—	√	Lower 16 bits
					—	√	—	√	√	—	√	√	—	—	—	—	√	√	√	√	Upper 16 bits

Table 2.42 List of Registers in Port Group JP0

Port group name	Register name	R/W	Value after reset	Access size	Bitmap																Remarks
					15	14	13	12	11	10	9	8	7	6	5	4	3	2	1	0	
JP0	JP0	R/W	00_H	8	—	—	—	—	—	—	—	—	—	—	√	—	√	—	√	√	
	JPSR0	R/W	$0000\ 0000_H$	32	—	—	—	—	—	—	—	—	—	—	√	—	√	—	√	√	Lower 16 bits
					—	—	—	—	—	—	—	—	—	—	√	—	√	—	√	√	Upper 16 bits
	JPPR0	R	00_H	8	—	—	—	—	—	—	—	—	—	—	√	√	√	√	√	√	
	JPM0	R/W	FF_H	8	—	—	—	—	—	—	—	—	—	—	√	—	√	—	√	√	
	JPMC0	R/W	00_H	8	—	—	—	—	—	—	—	—	—	—	—	—	—	√	√	√	
	JPFCE0	R/W	00_H	8	—	—	—	—	—	—	—	—	—	—	—	—	—	√	√	√	
	JPNOT0	W	00_H	8	—	—	—	—	—	—	—	—	—	—	√	—	√	—	√	√	
	JPMSR0	R/W	$0000\ 00FF_H$	32	—	—	—	—	—	—	—	—	—	—	√	—	√	—	√	√	Lower 16 bits
					—	—	—	—	—	—	—	—	—	—	√	—	√	—	√	√	Upper 16 bits
	JPMCSR0	R/W	$0000\ 0000_H$	32	—	—	—	—	—	—	—	—	—	—	—	—	—	√	√	√	Lower 16 bits
					—	—	—	—	—	—	—	—	—	—	—	—	—	√	√	√	Upper 16 bits
	JPIBC0	R/W	00_H	8	—	—	—	—	—	—	—	—	—	—	√	—	√	√	√	√	
	JPBDC0	R/W	00_H	8	—	—	—	—	—	—	—	—	—	—	√	—	√	—	√	√	
	JPU0	R/W	00_H	8	—	—	—	—	—	—	—	—	—	—	√	—	√	√	√	√	
	JPD0	R/W	00_H	8	—	—	—	—	—	—	—	—	—	—	√	—	√	√	√	√	
	JPODC0	R/W	$0000\ 0000_H$	32	—	—	—	—	—	—	—	—	—	—	√	—	√	—	√	√	Lower 16 bits
					—	—	—	—	—	—	—	—	—	—	—	—	—	—	—	—	Upper 16 bits
	JPDSC0	R/W	$0000\ 0000_H$	32	—	—	—	—	—	—	—	—	—	—	√	—	√	—	√	√	Lower 16 bits
					—	—	—	—	—	—	—	—	—	—	—	—	—	—	—	—	Upper 16 bits
	JPUCC0	R/W	$0000\ 0000_H$	32	—	—	—	—	—	—	—	—	—	—	√	—	√	—	√	√	Lower 16 bits
					—	—	—	—	—	—	—	—	—	—	—	—	—	—	—	—	Upper 16 bits
	JPISA0	R/W	00_H	8	—	—	—	—	—	—	—	—	—	—	√	—	√	√	√	√	
	JPPROTS0	R	$0000\ 0000_H$	32	—	—	—	—	—	—	—	—	—	—	—	—	—	—	—	√	Lower 16 bits
					—	—	—	—	—	—	—	—	—	—	—	—	—	—	—	—	Upper 16 bits
	JPPCMD0	W	$0000\ 0000_H$	32	—	—	—	—	—	—	—	—	√	√	√	√	√	√	√	√	Lower 16 bits
					—	—	—	—	—	—	—	—	—	—	—	—	—	—	—	—	Upper 16 bits
	JPCR0_0	R/W	$0000\ 0010_H$	32	—	—	—	√	—	—	—	√	—	√	—	√	—	—	√	—	Lower 16 bits
					—	—	—	√	—	—	√	√	—	√	—	—	√	√	√	√	Upper 16 bits
	JPCR0_1	R/W	$0000\ 0010_H$	32	—	—	—	√	—	—	—	√	—	√	—	√	—	—	√	—	Lower 16 bits
					—	—	—	√	—	—	√	√	—	√	—	—	√	√	√	√	Upper 16 bits
	JPCR0_2	R/W	$0000\ 0010_H$	32	—	—	—	—	—	—	—	√	—	√	—	—	—	—	√	—	Lower 16 bits
					—	—	—	—	—	—	—	—	—	√	—	—	√	√	—	√	Upper 16 bits
	JPCR0_3	R/W	$0000\ 0010_H$	32	—	—	—	√	—	—	—	√	—	—	—	√	—	—	—	—	Lower 16 bits
					—	—	—	√	—	—	√	√	—	√	—	—	√	√	√	√	Upper 16 bits
	JPCR0_4	R/W	$0000\ 0010_H$	32	—	—	—	—	—	—	—	√	—	—	—	—	—	—	—	—	Lower 16 bits
					—	—	—	—	—	—	—	—	—	—	—	—	—	—	—	—	Upper 16 bits
	JPCR0_5	R/W	$0000\ 0010_H$	32	—	—	—	√	—	—	—	√	—	—	—	√	—	—	—	—	Lower 16 bits
					—	—	—	√	—	—	√	√	—	√	—	—	√	√	√	√	Upper 16 bits

Note: The JPPR0.JPPR0_4 bit is used to read the level on the $\overline{\text{DCUTRST}}$ pin.

2.4.1.2 List of Alternative Function Pins

Table 2.43 to **Table 2.49** show the list of alternative functions of each port pin. In the tables, "—" means a reserved bit which cannot be selected.

2.4.1.3 Port 0 (P0)

Table 2.43 Port 0 (P0)

Port Mode (PMC0_m = 0)	Alternative Mode (PMC0_m = 1)												Dedicated Function	Device			
	1st Alternative		2nd Alternative		3rd Alternative		4th Alternative		5th Alternative		6th Alternative			100-pin		144-pin	
	Input	Output	Input	Output	Input	Output	Input	Output	Input	Output	Input	Output		eVR	DPS	eVR	DPS
P0_0	TAUJ0I1	TAUJ0O1		SENT3SPCO		TAUD1O14		ADCD0CNV2		PSI50DOUT		RLIN30TX		√	√	√	√
P0_1	TAUJ0I2	TAUJ0O2	SENT4RX	SENT4SPCO		TAUD1O15		ADCD0CNV3			RLIN31RX/ INTP4			√	√	√	√
P0_2	SCI30RX/ INTP0		TAPA1ESO/ INTP8		TAUD2I0	ADCD0CNV0		TAUD2O0			SENT5RX	SENT5SPCO		√	√	√	√
P0_3		SCI30TX		TAUD1O8	TAUD2I1	ADCD0CNV1		TAUD2O1				SENT5SPCO	AUDATA1	—	—	√	√
P0_4	SCI30SCI	SCI30SCO		TAUD1O9	TAUD2I2	ADCD0CNV2		TAUD2O2				SENT4SPCO	AUDATA2	—	—	√	√
P0_5	TAUJ1I0	TAUJ1O0		TAUD1O10	TAUD2I3	ADCD0CNV3		TAUD2O3				SENT3SPCO	AUDATA3	—	—	√	√
P0_6	TAUJ1I1	TAUJ1O1		TAUD1O11	TAUD2I4			TAUD2O4				SENT2SPCO	AUDCK	—	—	√	√
P0_7	TAUJ1I2	TAUJ1O2		TAUD1O12	TAUD2I5		ADCDTRG0	TAUD2O5				SENT1SPCO	$\overline{\text{AUDSYNC}}$	—	—	√	√
P0_8	TAUJ1I3	TAUJ1O3		TAUD1O13	TAUD2I6		ADCDTRG1	TAUD2O6				SENT0SPCO	$\overline{\text{AUDRST}}$	—	—	√	√
P0_9		ADCD1CNV1		TAUD1O14	TAUD2I7	ADCD0CNV4		TAUD2O7					AUDATA0	—	—	√	√
P0_10				ADCD1CNV0									$\overline{\text{RESET}}$ $\overline{\text{OUT}}$ $\overline{\text{EVTO}}$	√	√	√	√
P0_11				ADCD1CNV2										—	—	√	√
P0_12				ADCD1CNV3										—	—	√	√
P0_13		OSTM0O		TAUD1O15	TAUD2I7		INTP9	TAUD2O7					$\overline{\text{EVTI}}$	√	√	√	√
P0_14				ADCD1CNV4										—	—	√	√

Note: P0_10: $\overline{\text{RESETOUT}}$

P0_10 is in initial state, and outputs low level.

After reset release, the setting will be as below.

- PM0.PM0_10 = 0: output port
- PODC0.PODC0_10: Nch open-drain output

After release from the reset state, the operation described in **Section 8.2.1, Reset Output ($\overline{\text{RESETOUT}}$)**, is enabled by output of the high level (P0.P0_10 = 1).

2.4.1.4 Port 1 (P1)

Table 2.44 Port 1 (P1)

Port Mode (PMC1_m = 0)	Alternative Mode (PMC1_m = 1)												Dedicated Function	Device			
	1st Alternative		2nd Alternative		3rd Alternative		4th Alternative		5th Alternative		6th Alternative			100-pin		144-pin	
	Input	Output	Input	Output	Input	Output	Input	Output	Input	Output	Input	Output		eVR	DPS	eVR	DPS
P1_0								RLIN30TX				CSIH3RYO		—	—	√	√
P1_1	TAUJ2I0	TAUJ2O0	TAUJ1I0	TAUJ1O0	TAUD2I12	TAUD2O12	RLIN30RX/ INTP3	CSIH2CSS0	TAUD0I6		CSIH3RYI			√	√	√	√
P1_2	TAUJ2I1	TAUJ2O1	TAUJ1I1	TAUJ1O1	TAUD2I13	TAUD2O13	CSIH2SI		TAUD0I8		CSIH3SI			√	√	√	√
P1_3	TAUJ2I2	TAUJ2O2	TAUJ1I2	TAUJ1O2	TAUD2I14	TAUD2O14		CSIH2SO	TAUD0I10			CSIH3SO		√	√	√	√
P1_4	TAUJ2I3	TAUJ2O3	TAUJ1I3	TAUJ1O3	TAUD2I15	TAUD2O15	CSIH2SCI	CSIH2SCO			CSIH3SCI	CSIH3SCO		√	√	√	√

2.4.1.5 Port 2 (P2)

Table 2.45 Port 2 (P2)

Port Mode (PMC2_m = 0)	Alternative Mode (PMC2_m = 1)												Dedicated Function	Device			
	1st Alternative		2nd Alternative		3rd Alternative		4th Alternative		5th Alternative		6th Alternative			100-pin		144-pin	
	Input	Output	Input	Output	Input	Output	Input	Output	Input	Output	Input	Output		eVR	DPS	eVR	DPS
P2_0	RSCAN0RX0/ INTP5		CSIH2SI		TAUD2I11	TAUD2O11		CSIH3CSS6						√	√	√	√
P2_1		RSCAN0TX0		CSIH2SO	TAUD2I12	TAUD2O12		CSIH3CSS7		TSG30O7				√	√	√	√
P2_2	RSCAN0RX1/ INTP6		CSIH2SCI	CSIH2SCO	TAUD2I13	TAUD2O13		TPB0O		TSG30O0		CSIH0CSS5		√	√	√	√
P2_3		RSCAN0TX1	CSIH2RYI	CSIH2CSS0	TAUD2I14	TAUD2O14		TPB1O		TSG30O1				√	√	√	√
P2_4		CSIH2RYO		CSIH0CSS2		RLIN31TX	TAUJ1I3	TAUJ1O3	CSIH0SI		TAUD2I11	TAUD2O11		√	√	√	√
P2_5	SCI30RX/ INTP0			CSIH0CSS3	RLIN31RX/ INTP4			CSIH3SO		TSG30O2		CSIH0SO		√	√	√	√
P2_6		SCI30TX		OSTM1O	CSIH0SCI	CSIH0SCO	CSIH3SI	CSIH0CSS4		TSG30O3	TAUD1I0	TAUD1O0		√	√	√	√
P2_7	SCI30SCI	SCI30SCO		CSIH0CSS5	CSIH1SI		CSIH3SCI	CSIH3SCO		TSG30O4	TAUD1I1	TAUD1O1		√	√	√	√
P2_8	SCI31RX/ INTP1	CSIH3RYO		CSIH0CSS6		CSIH1SO	CSIH3RYI	CSIH3CSS0		TSG30O5	TAUD1I2	TAUD1O2		√	√	√	√
P2_9		SCI31TX		CSIH0CSS7	CSIH1SCI	CSIH1SCO		CSIH3CSS1		TSG30O6	TAUD1I3	TAUD1O3		√	√	√	√
P2_10					TAUD2I10	TAUD2O10			CSIH0RYI	CSIH0CSS6		OSTM1O		—	—	√	√
P2_11	TAUD1I0			TAUD1O0	TAUD1I1			TAUD1O1		CSIH0CSS5	CSIH1RYI	CSIH0RYO		—	—	√	√
P2_12	TAUD1I2			TAUD1O2	TAUD1I3			TAUD1O3		CSIH0CSS4		CSIH0SO		—	—	√	√
P2_13	TAUD1I4			TAUD1O4	TAUD1I5			TAUD1O5		CSIH0CSS3		CSIH1RYO		—	—	√	√
P2_14	TAUD1I6			TAUD1O6	TAUD1I7			TAUD1O7		CSIH0CSS2				—	—	√	√
P2_15	TAUD1I8			TAUD1O8	TAUD1I9			TAUD1O9	CSIH0RYI					—	—	√	√

2.4.1.6 Port 3 (P3)

Table 2.46 Port 3 (P3)

Port Mode (PMC3_m = 0)	Alternative Mode (PMC3_m = 1)												Dedicated Function	Device			
	1st Alternative		2nd Alternative		3rd Alternative		4th Alternative		5th Alternative		6th Alternative			100-pin		144-pin	
	Input	Output	Input	Output	Input	Output	Input	Output	Input	Output	Input	Output		eVR	DPS	eVR	DPS
P3_0	TAUD1I10			TAUD1O10	TAUD1I11			TAUD1O11		CSIH0SO	CSIG0SI			—	—	√	√
P3_1	TAUD1I12			TAUD1O12	TAUD1I13			TAUD1O13	CSIH0SCI	CSIH0SCO		CSIG0SO		—	—	√	√
P3_2	TAUD1I14			TAUD1O14	TAUD1I15			TAUD1O15	CSIH0SI	CSIH0CSS7	CSIG0SCI	CSIG0SCO		—	—	√	√
P3_3	CSIH0RYI	SCI32TX	TAUD1I0	CSIH2CSS1			$\overline{\text{CSIH3SSI}}$	CSIH3CSS4		TAUD1O0		TAUD1O1		√	√	√	√
P3_4	SCI32RX/ INTP2		TAUD1I2	CSIH2CSS2	RLIN30RX/ INTP3	CSIG0RYO		CSIH3CSS3		TAUD1O2		TAUD1O3		√	√	√	√
P3_5	SCI31SCI	SCI31SCO	TAUD0I0	CSIH2CSS3	CSIG0RYI	RLIN30TX		CSIH3CSS2		TAUD0O0		TAUD0O1		√	√	√	√
P3_6	CSIH0SI			TSG31O0				TAUD0O2	CSIH3RYI	CSIH2CSS4		TAUD0O3		√	√	√	√
P3_7		CSIH0SO		TSG31O1	RSCAN0RX0/ INTP5		SCI30RX/ INTP0		CSIH2RYI	CSIH2CSS5		TAUD0O5		√	√	√	√
P3_8	CSIH0SCI	CSIH0SCO		TSG31O2		RSCAN0TX0		TPB1O	$\overline{\text{CSIH0SSI}}$	CSIH2CSS6		TAUD0O7		√	√	√	√
P3_9	SCI32SCI	SCI32SCO		TSG31O3				CSIH3CSS5	CSIH0RYI	CSIH2CSS7		TAUD0O9		√	√	√	√
P3_10				TSG31O4					TAUD1I6			TAUD0O11		√	√	√	√
P3_11	TAUJ0I3	TAUJ0O3		SENT4SPCO				ADCD0CNV4				RLIN31TX		√	√	√	√
P3_12		CSIH1RYO		TSG31O5	RSCAN0RX1/ INTP6			SCI30TX	TAUD1I8	CSIH0CSS0		TAUD0O13		√	√	√	√
P3_13	CSIH1RYI			TSG31O6		RSCAN0TX1	SCI30SCI	SCI30SCO	TAUD1I10	CSIH0CSS1		TAUD0O15		√	√	√	√
P3_14	CSIH1SI		TAPA0ESO/ INTP7	TPB1O		EXTCLK0O	NMI					TSG31O7	FLMD1	√	√	√	√

2.4.1.7 Port 4 (P4)

Table 2.47 Port 4 (P4)

Port Mode (PMC4_m = 0)	Alternative Mode (PMC4_m = 1)												Dedicated Function	Device			
	1st Alternative		2nd Alternative		3rd Alternative		4th Alternative		5th Alternative		6th Alternative			100-pin		144-pin	
	Input	Output	Input	Output	Input	Output	Input	Output	Input	Output	Input	Output		eVR	DPS	eVR	DPS
P4_0		CSIH1SO	TAUJ0I0	TAUJ0O0	RLIN30RX/ INTP3		TSG30PTSI0/ ENCA0E0			FLX0TXDA*1		ADCD1CNV0		√	√	√	√
P4_1	CSIH1SCI	CSIH1SCO	TAUJ0I1	TAUJ0O1		RLIN30TX	TSG30PTSI1/ ENCA0E1			FLX0TXENA *1		ADCD1CNV1		√	√	√	√
P4_2	RSCAN0RX1/ INTP6	CSIH1RYO	TAUJ0I2	TAUJ0O2	SCI30SCI	SCI30SCO	TSG30PTSI2/ ENCA0EC		FLX0RXDA*1/ INTP11			ADCD1CNV2		√	√	√	√
P4_3	CSIH2RYI	RSCAN0TX1	TAUJ0I3	TAUJ0O3		OSTM1O	TSG30CLKI	CSIH1CSS0	FLX0RXDB*1/ INTP12	ADCD1CNV3	TAUD2I0	TAUD2O0		√	√	√	√
P4_4	CSIH2SI		TAPA1ESO/ INTP8			CSIH2CSS7	TSG31PTSI0/ ENCA1E0	CSIH1CSS1	FLX0STPWT *1	ADCD1CNV4	TAUD2I1	TAUD2O1		√	√	√	√
P4_5		CSIH2SO	SCI30RX/ INTP0		RSCAN0RX0/ INTP5	EXTCLK1O	TSG31PTSI1/ ENCA1E1	CSIH1CSS2		FLX0TXDB*1	TAUD2I2	TAUD2O2		√	√	√	√
P4_6	CSIH2SCI	CSIH2SCO		SCI30TX		RSCAN0TX0	TSG31PTSI2/ ENCA1EC	CSIH1CSS3		FLX0TXENB *1	TAUD2I3	TAUD2O3		√	√	√	√
P4_7	RSCAN0RX1/ INTP6	CSIH2RYO		TAUD1O0	ENCA0TIN0	CSIH2CSS0	TSG31CLKI			CSIH1CSS4	TAUD2I4	TAUD2O4		—	—	√	√
P4_8	FLX0RXDA*1/ INTP11			TAUD1O1	ENCA0TIN1	CSIH2CSS1	$\overline{\text{CSIH1SSI}}$			CSIH1CSS5	TAUD2I5	TAUD2O5		—	—	√	√
P4_9		FLX0TXDA*1		TAUD1O2	ENCA1TIN0	CSIH2CSS2	CSIH1RYI			CSIH1CSS6	TAUD2I6	TAUD2O6		—	—	√	√
P4_10		FLX0TXENA *1		TAUD1O3	ENCA1TIN1	CSIH2CSS3		CSIH1RYO		CSIH1CSS7	TAUD2I7	TAUD2O7		—	—	√	√
P4_11	FLX0RXDB*1/ INTP12			TAUD1O4		CSIH2CSS4	TAUJ1I0	TAUJ1O0			TAUD2I8	TAUD2O8		—	—	√	√
P4_12		FLX0TXDB*1		TAUD1O5		CSIH2CSS5	TAUJ1I1	TAUJ1O1			TAUD2I9	TAUD2O9		—	—	√	√
P4_13		FLX0TXENB *1		TAUD1O6	$\overline{\text{CSIH2SSI}}$		TAUJ1I2	TAUJ1O2			TAUD2I10	TAUD2O10		—	—	√	√
P4_14	FLX0STPWT *1			TAUD1O7		CSIH2CSS6	TAUJ1I3	TAUJ1O3			TAUD2I11	TAUD2O11		—	—	√	√

Note 1. Only available in devices with 2- and 1-MB flash memories.

2.4.1.8 Port 5 (P5)

Table 2.48 Port 5 (P5)

Port Mode (PMC5_m = 0)	Alternative Mode (PMC5_m = 1)												Dedicated Function	Device			
	1st Alternative		2nd Alternative		3rd Alternative		4th Alternative		5th Alternative		6th Alternative			100-pin		144-pin	
	Input	Output	Input	Output	Input	Output	Input	Output	Input	Output	Input	Output		eVR	DPS	eVR	DPS
P5_0	CSIG0SI			TAUD0O0	TAUD0I1			TAUD0O1		CSIH2CSS1	SCI30RX/ INTP0			√	√	√	√
P5_1		CSIG0SO		TAUD0O2	TAUD0I3	ADCD0CNV0		TAUD0O3	TAUD0I2	CSIH2CSS2		SCI30TX		√	√	√	√
P5_2	CSIG0SCI	CSIG0SCO		TAUD0O2	TAUD0I14			TAUD0O3	TAUD0I15		SCI30SCI	SCI30SCO		—	—	√	√
P5_3					TAUD0I7				TAUD0I6					—	—	√	√
P5_4	CSIG0SCI	CSIG0SCO		TAUD0O4	TAUD0I5	ADCD0CNV1		TAUD0O5	TAUD0I4	CSIH2CSS3	SCI30SCI	SCI30SCO		√	√	√	√
P5_5	SENT0RX	SENT0SPCO		TAUD0O6	TAUD0I7	ADCD0CNV2		TAUD0O7	TAUD0I6	CSIH2CSS4	SCI31RX/ INTP1			√	√	√	√
P5_6	RSCAN0RX2 *1/INTP10	SENT0SPCO		TAUD0O8	TAUD0I9	ADCD0CNV3		TAUD0O9	TAUD0I8	CSIH2CSS5		SCI31TX		√	√	√	√
P5_7		RSCAN0TX2 *1		TAUD0O10	TAUD0I11	ADCD0CNV4		TAUD0O11	TAUD0I10	CSIH2CSS6	SCI31SCI	SCI31SCO		√	√	√	√
P5_8	SENT1RX	SENT1SPCO		TAUD0O12	TAUD0I13			TAUD0O13	TAUD0I12	CSIH2CSS7	SCI32RX/ INTP2			√	√	√	√
P5_9	TAUD0I14	SENT1SPCO		TAUD0O14	TAUD0I15			TAUD0O15	PSI51DIN			SCI32TX		√	√	√	√
P5_10	RLIN30RX/ INTP3						ADCDTRG0	ADCD0CNV0		PSI51DOUT	SCI32SCI	SCI32SCO		√	√	√	√
P5_11		RLIN30TX	SENT3RX	SENT3SPCO		TAUD1O10								—	—	√	√
P5_12	RLIN31RX/ INTP4		SENT2RX	SENT2SPCO		TAUD1O11								—	—	√	√
P5_13		RLIN31TX		SENT2SPCO		TAUD1O12	TAUD0I13		TAUD0I12					—	—	√	√
P5_14	TAUJ0I0	TAUJ0O0	SENT3RX	SENT3SPCO		TAUD1O13	ADCDTRG1	ADCD0CNV1	PSI50DIN		RLIN30RX/ INTP3			√	√	√	√
P5_15	RLIN31RX/ INTP4			SENT3SPCO								RLIN30TX		—	—	√	√

Note 1. Only available in devices with 2-MB flash memory.

2.4.1.9 Port JP0 (JP0)

Table 2.49 Port JP0 (JP0)

Port Mode (JPMC0_m = 0)	Alternative Mode (JPMC0_m = 1)												Dedicated Function	Device			
	1st Alternative		2nd Alternative		3rd Alternative		4th Alternative		5th Alternative		6th Alternative			100-pin		144-pin	
	Input	Output	Input	Output	Input	Output	Input	Output	Input	Output	Input	Output		eVR	DPS	eVR	DPS
JP0_0					FLSCI3RXD (FPDR)	FLSCI3TXD (FPDT)							DCUTDI/LPDI/ LPDIO	√	√	√	√
JP0_1						FLSCI3TXD (FPDT)							DCUTDO/LPDO	√	√	√	√
JP0_2					FLSCI3SCKI (FPCK)[								DCUTCK/ LPDCLK	√	√	√	√
JP0_3													DCUTMS	√	√	√	√
JP0_4													$\overline{\text{DCUTRST}}$	√	√	√	√
JP0_5													$\overline{\text{DCUTRDY}}$/ LPDCLKOUT	√	√	√	√

2.4.2 Handling of Unused Pins

The alternative functions can be selected in the option bytes.

We recommend use of pull-up/-down resistor with the value of 1 KΩ or above.

When pull-up/-down resistor is used, connect a resistor between two pins. Do not directly connect the pins with a wire.

Table 2.50 Handling of Unused Pins (JP0)

Pin Name	Alternative Function	Handling when of Unused Pins
JP0_0	GPI/O	Input: When input buffer is disabled in input port mode (JPIBC0_m=0 and JPMC0_m=0): Open When input buffer is enabled in input port mode or input is selected in S/W I/O control alternative mode (JPIBC0_m = 1 or JPMC0_m = 1): Connected to EVCC or EVSS through resistor Output: Open
	DCUTDI	Connected to EVCC through resistor
	LPDIO	
	LPDI	Open
JP0_1	GPI/O	Input: When input buffer is disabled in input port mode (JPIBC0_m=0 and JPMC0_m=0): Open When input buffer is enabled in input port mode or input is selected in S/W I/O control alternative mode (JPIBC0_m=1 or JPMC0_m=1): Connected to EVCC or EVSS through resistor Output: Open
	DCUTDO	Open
	LPDO	Open
JP0_2	GPI	Input: When input buffer is disabled in input port mode (JPIBC0_m=0 and JPMC0_m=0): Open When input buffer is enabled in input port mode or input is selected in S/W I/O control alternative mode (JPIBC0_m=1 or JPMC0_m=1): Connected to EVCC or EVSS through resistor Output: No output
	DCUTCK	Open
	LPDCLK	Open
JP0_3	GPI/O	Input: When input buffer is disabled in input port mode (JPIBC0_m=0 and JPMC0_m=0): Open When input buffer is enabled in input port mode or input is selected in S/W I/O control alternative mode (JPIBC0_m=1 or JPMC0_m=1): Connected to EVCC or EVSS through resistor Output: Open
	DCUTMS	Connected to EVCC through resistor
JP0_4	$\overline{\text{DCUTRST}}$	Connected to VSS
JP0_5	GPI/O	Input: When input buffer is disabled in input port mode (JPIBC0_m=0 and JPMC0_m=0): Open When input buffer is enabled in input port mode or input is selected in S/W I/O control alternative mode (JPIBC0_m=1 or JPMC0_m=1): Connected to EVCC or EVSS through resistor Output: Open
	$\overline{\text{DCUTRDY}}$	Open
	LPDCLKOUT	Open

Table 2.51 Handling of Unused Pins (P0) (1/2)

Pin Name	Alternative Function	Handling of Unused Pins
P0_0 P0_1 P0_2	GPI/O	Input: When input buffer is disabled in input port mode (PIBCn_m=0 and PMCn_m=0): Open When input buffer is enabled in input port mode or input is selected in S/W I/O control alternative mode (PIBCn_m=1 or PMCn_m=1): Connected to EVCC or EVSS through resistor Output: Open
P0_3	GPI/O	Input: When input buffer is disabled in input port mode (PIBCn_m=0 and PMCn_m=0): Open When input buffer is enabled in input port mode or input is selected in S/W I/O control alternative mode (PIBCn_m=1 or PMCn_m=1): Connected to EVCC or EVSS through resistor Output: Open
	AUDATA1	Open
P0_4	GPI/O	Input: When input buffer is disabled in input port mode (PIBCn_m=0 and PMCn_m=0): Open When input buffer is enabled in input port mode or input is selected in S/W I/O control alternative mode (PIBCn_m=1 or PMCn_m=1): Connected to EVCC or EVSS through resistor Output: Open
	AUDATA2	Open
P0_5	GPI/O	Input: When input buffer is disabled in input port mode (PIBCn_m=0 and PMCn_m=0): Open When input buffer is enabled in input port mode or input is selected in S/W I/O control alternative mode (PIBCn_m=1 or PMCn_m=1): Connected to EVCC or EVSS through resistor Output: Open
	AUDATA3	Open
P0_6	GPI/O	Input: When input buffer is disabled in input port mode (PIBCn_m=0 and PMCn_m=0): Open When input buffer is enabled in input port mode or input is selected in S/W I/O control alternative mode (PIBCn_m=1 or PMCn_m=1): Connected to EVCC or EVSS through resistor Output: Open
	AUDCK	Open
P0_7	GPI/O	Input: When input buffer is disabled in input port mode (PIBCn_m=0 and PMCn_m=0): Open When input buffer is enabled in input port mode or input is selected in S/W I/O control alternative mode (PIBCn_m=1 or PMCn_m=1): Connected to EVCC or EVSS through resistor Output: Open
	$\overline{\text{AUDSYNC}}$	Open
P0_8	GPI/O	Input: When input buffer is disabled in input port mode (PIBCn_m=0 and PMCn_m=0): Open When input buffer is enabled in input port mode or input is selected in S/W I/O control alternative mode (PIBCn_m=1 or PMCn_m=1): Connected to EVCC or EVSS through resistor Output: Open
	$\overline{\text{AUDRST}}$	Open

Table 2.51 Handling of Unused Pins (P0) (2/2)

Pin Name	Alternative Function	Handling of Unused Pins
P0_9	GPI/O	Input: When input buffer is disabled in input port mode (PIBCn_m=0 and PMCn_m=0): Open When input buffer is enabled in input port mode or input is selected in S/W I/O control alternative mode (PIBCn_m=1 or PMCn_m=1): Connected to EVCC or EVSS through resistor Output: Open
	AUDATA0	Open
P0_10	GPI/O $\overline{\text{RESETOUT}}$	Input: When input buffer is disabled in input port mode (PIBCn_m=0 and PMCn_m=0): Open When input buffer is enabled in input port mode or input is selected in S/W I/O control alternative mode (PIBCn_m=1 or PMCn_m=1): Connected to EVSS through resistor Output: Open
	$\overline{\text{EVTO}}$	Open
P0_11 P0_12	GPI/O	Input: When input buffer is disabled in input port mode (PIBCn_m=0 and PMCn_m=0): Open When input buffer is enabled in input port mode or input is selected in S/W I/O control alternative mode (PIBCn_m=1 or PMCn_m=1): Connected to EVCC or EVSS through resistor Output: Open
P0_13	GPI/O	Input: When input buffer is disabled in input port mode (PIBCn_m=0 and PMCn_m=0): Open When input buffer is enabled in input port mode or input is selected in S/W I/O control alternative mode (PIBCn_m=1 or PMCn_m=1): Connected to EVCC or EVSS through resistor Output: Open
	$\overline{\text{EVTI}}$	Open
P0_14	GPI/O	Input: When input buffer is disabled in input port mode (PIBCn_m=0 and PMCn_m=0): Open When input buffer is enabled in input port mode or input is selected in S/W I/O control alternative mode (PIBCn_m=1 or PMCn_m=1): Connected to EVCC or EVSS through resistor Output: Open

Table 2.52 Handling of Unused Pins (P1)

Pin Name	Alternative Function	Handling of Unused Pins
P1_0 P1_1 P1_2 P1_3 P1_4	GPI/O	Input: When input buffer is disabled in input port mode (PIBCn_m=0 and PMCn_m=0): Open When input buffer is enabled in input port mode or input is selected in S/W I/O control alternative mode (PIBCn_m=1 or PMCn_m=1): Connected to EVCC or EVSS through resistor Output: Open

Table 2.53 Handling of Unused Pins (P2)

Pin Name	Alternative Function	Handling of Unused Pins
P2_0	GPI/O	Input: When input buffer is disabled in input port mode (PIBCn_m=0 and PMCn_m=0): Open When input buffer is enabled in input port mode or input is selected in S/W I/O control alternative mode (PIBCn_m=1 or PMCn_m=1): Connected to EVCC or EVSS through resistor Output: Open
P2_1		
P2_2		
P2_3		
P2_4		
P2_5		
P2_6		
P2_7		
P2_8		
P2_9		
P2_10		
P2_11		
P2_12		
P2_13		
P2_14		
P2_15		

Table 2.54 Handling of Unused Pins (P3)

Pin Name	Alternative Function	Handling of Unused Pins
P3_0	GPI/O	Input: When input buffer is disabled in input port mode (PIBCn_m=0 and PMCn_m=0): Open When input buffer is enabled in input port mode or input is selected in S/W I/O control alternative mode (PIBCn_m=1 or PMCn_m=1): Connected to EVCC or EVSS through resistor Output: Open
P3_1		
P3_2		
P3_3		
P3_4		
P3_5		
P3_6		
P3_7		
P3_8		
P3_9		
P3_10		
P3_11		
P3_12		
P3_13		
P3_14	FLMD1	Connected to EVSS through resistor

Table 2.55 Handling of Unused Pins (P4)

Pin Name	Alternative Function	Handling of Unused Pins
P4_0	GPI/O	Input: When input buffer is disabled in input port mode (PIBCn_m=0 and PMCn_m=0): Open When input buffer is enabled in input port mode or input is selected in S/W I/O control alternative mode (PIBCn_m=1 or PMCn_m=1): Connected to EVCC or EVSS through resistor Output: Open
P4_1		
P4_2		
P4_3		
P4_4		
P4_5		
P4_6		
P4_7		
P4_8		
P4_9		
P4_10		
P4_11		
P4_12		
P4_13		
P4_14		

Table 2.56 Handling of Unused Pins (P5)

Pin Name	Alternative Function	Handling of Unused Pins
P5_0	GPI/O	Input: When input buffer is disabled in input port mode (PIBCn_m=0 and PMCn_m=0): Open When input buffer is enabled in input port mode or input is selected in S/W I/O control alternative mode (PIBCn_m=1 or PMCn_m=1): Connected to EVCC or EVSS through resistor Output: Open
P5_1		
P5_2		
P5_3		
P5_4		
P5_5		
P5_6		
P5_7		
P5_8		
P5_9		
P5_10		
P5_11		
P5_12		
P5_13		
P5_14		
P5_15		

Table 2.57 Handling of Unused Pins (Others)

Pin Name	Alternative Function	Handling of Unused Pins
FLMD0		Connected to EVSS through resistor
$\overline{\text{RESET}}$		This pin must be used.
$\overline{\text{CVMOUT}}$		Open
$\overline{\text{ERROROUT}}$		Open
X1		This pin must be used.
X2		This pin must be used.
VCC		This pin must be used.
VSS		This pin must be used.
VDD		This pin must be used.
VCL		This pin must be used. One of the VCL3 pins can be left open-circuit in the case of the 144-pin products.
EVCC		This pin must be used.
EVSS		This pin must be used.
A0VCC		This pin must be used.
A0VREFH		This pin must be used.
A0VSS		This pin must be used.
A1VCC		This pin must be used.
A1VREFH		This pin must be used.
AIVSS		This pin must be used.

Table 2.58 Handling of Unused Pins (ADCD0, ADCD1)

Pin Name	Alternative Function	Handling of Unused Pins
ADCD0I0	ADIN	Connected to A0VCC or A0VSS.
ADCD0I1		
ADCD0I2		
ADCD0I3		
ADCD0I4		
ADCD0I5		
ADCD0I6		
ADCD0I7		
ADCD0I8		
ADCD0I9		
ADCD0I10		
ADCD0I11		
ADCD1I0	ADIN	Connected to A1VCC or A1VSS.
ADCD1I1		
ADCD1I2		
ADCD1I3		
ADCD1I4		
ADCD1I5		
ADCD1I6		
ADCD1I7		
ADCD1I8		
ADCD1I9		
ADCD1I10		
ADCD1I11		

2.5 DNF

Digital Noise Filter (DNF) eliminates digital noise from external input signals. This product includes two sorts of DNF: peripheral function DNF and edge detection DNF.

2.5.1 Example of Noise Elimination

Figure 2.9 shows an example of noise elimination in peripheral function DNF and edge detection DNF. In this example, the sampling clock, the sampling count, and the current output level are set to 1/2 of the DNF input clock, two (twice), and low, respectively. "○" in the figure means that high level is detected.

In input examples 1, 2, and 3, in which the same level is detected twice consecutively, the change in the input signal is output internally.

In input examples 4, 5, and 6, in which the same level is not detected twice consecutively, input signal is regarded as noise and eliminated. Therefore, no change in the internal output is found.

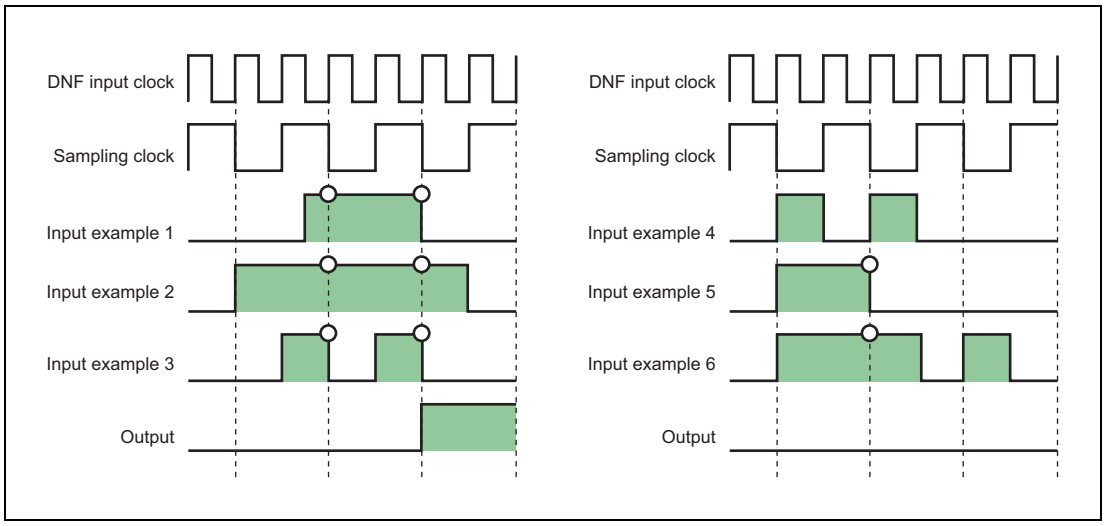

Figure 2.9 Timing Chart of Digital Noise Elimination

2.6 Noise Filter and Edge Level Detection Circuit

Some signals that are input to a pin pass the filter to eliminate noises and glitches. This product supports both analog filter and digital filter.

Additionally, the product also supports the function of detecting an edge or level after a pass through a filter.

The first section describes port input signals to which filters are allocated and the types of the filters, the noise filter and edge level detection control register and its control bits, and an overview of the register address and others.

For details about the digital/analog filter function and the noise filter and edge level detection control register, see **Section 2.6.1, Allocation of Port Filters**.

2.6.1 Allocation of Port Filters

The following is a list of input pins that have analog filter or digital filter.

Table 2.59 List of Input Pins with a Noise Filter (1/6)

Input Pin	Filter Type	Digital Noise Elimination Control Register		Digital Noise Elimination Sampling Clock Source Selection Register	Digital Noise Elimination Enable Register			Filter Control Register		Device			
										100-pin		144-pin	
		Control Register	Address	Sampling Clock Source (DNFCKSnC.CKSCn[1:0])	Control Register	Control Bit	Address	Control Register	Address	eVR	DPS	eVR	DPS
INTP0/SCI30RX	Type A	DNFA0CTL	FFC3 0000_H	DNFCKS100C.CKSC100[1:0] 00: Setting prohibited 01: High-speed peripheral clock CLK_HSB 10: High-speed peripheral clock CLK_HSB/2 11: Setting prohibited	DNFA0EN	DNFA0NFENL0	FFC3 0004_H	FCLA1CTL0	FFC3 4020_H	√	√	√	√
INTP1/SCI31RX	Type A	DNFA0CTL	FFC3 0000_H		DNFA0EN	DNFA0NFENL1	FFC3 0004_H	FCLA1CTL1	FFC3 4024_H	√	√	√	√
INTP2/SCI32RX	Type A	DNFA0CTL	FFC3 0000_H		DNFA0EN	DNFA0NFENL2	FFC3 0004_H	FCLA1CTL2	FFC3 4028_H	√	√	√	√
INTP3/RLIN30RX	Type A	DNFA1CTL	FFC3 0100_H		DNFA1EN	DNFA1NFENL0	FFC3 0104_H	FCLA1CTL3	FFC3 $402C_H$	√	√	√	√
INTP4/RLIN31RX	Type A	DNFA1CTL	FFC3 0100_H		DNFA1EN	DNFA1NFENL1	FFC3 0104_H	FCLA1CTL4	FFC3 4030_H	√	√	√	√
INPT5/RSCAN0RX0	Type A	DNFA2CTL	FFC3 0200_H		DNFA2EN	DNFA2NFENL0	FFC3 0204_H	FCLA1CTL5	FFC3 4034_H	√	√	√	√
INTP6/RSCAN0RX1	Type A	DNFA2CTL	FFC3 0200_H		DNFA2EN	DNFA2NFENL1	FFC3 0204_H	FCLA1CTL6	FFC3 4038_H	√	√	√	√
INTP7/TAPA0ESO	Type B	DNFA3CTL	FFC3 0300_H		DNFA3EN	DNFA3NFENL0	FFC3 0304_H	FCLA1CTL7	FFC3 $403C_H$	√	√	√	√
INTP8/TAPA1ESO	Type B	DNFA3CTL	FFC3 0300_H		DNFA3EN	DNFA3NFENL1	FFC3 0304_H	FCLA2CTL0	FFC3 4040_H	√	√	√	√
INTP9	Type C	DNFA4CTL	FFC3 0400_H		DNFA4EN	DNFA4NFENL0	FFC3 0404_H	FCLA2CTL1	FFC3 4044_H	√	√	√	√
INTP10/RSCAN0RX2[*1]	Type A	DNFA2CTL	FFC3 0200_H		DNFA2EN	DNFA2NFENL2	FFC3 0204_H	FCLA2CTL2	FFC3 4048_H	√	√	√	√
INTP11/FLX0RXDA[*2]	Type A	DNFA2CTL	FFC3 0200_H		DNFA2EN	DNFA2NFENL3	FFC3 0204_H	FCLA2CTL3	FFC3 $404C_H$	√	√	√	√
INTP12/FLX0RXDB[*2]	Type A	DNFA2CTL	FFC3 0200_H		DNFA2EN	DNFA2NFENL4	FFC3 0204_H	FCLA2CTL4	FFC3 4050_H	√	√	√	√
NMI	Type C	DNFA4CTL	FFC3 0400_H		DNFA4EN	DNFA4NFENL1	FFC3 0404_H	FCLA0CTL0	FFC3 4000_H	√	√	√	√

Table 2.59 List of Input Pins with a Noise Filter (2/6)

Input Pin	Filter Type	Digital Noise Elimination Control Register		Digital Noise Elimination Sampling Clock Source Selection Register	Digital Noise Elimination Enable Register			Filter Control Register		Device			
										100-pin		144-pin	
		Control Register	Address	Sampling Clock Source (DNFCKSnC.CKSCn[1:0])	Control Register	Control Bit	Address	Control Register	Address	eVR	DPS	eVR	DPS
TAUD0I0	Type E	DNFA5CTL	FFC3 0500$_H$	DNFCKS108C.CKSC108[1:0] 00: Setting prohibited 01: High-speed peripheral clock CLK_HSB 10: High-speed peripheral clock CLK_HSB/2 11: TAUD0TCKEN0	DNFA5EN	DNFA5NFENL0	FFC3 0504$_H$	—	—	√	√	√	√
TAUD0I1	Type E	DNFA5CTL	FFC3 0500$_H$		DNFA5EN	DNFA5NFENL1	FFC3 0504$_H$	—	—	√	√	√	√
TAUD0I2	Type E	DNFA6CTL	FFC3 0600$_H$		DNFA6EN	DNFA6NFENL0	FFC3 0604$_H$	—	—	√	√	√	√
TAUD0I3	Type E	DNFA6CTL	FFC3 0600$_H$		DNFA6EN	DNFA6NFENL1	FFC3 0604$_H$	—	—	√	√	√	√
TAUD0I4	Type E	DNFA7CTL	FFC3 0700$_H$		DNFA7EN	DNFA7NFENL0	FFC3 0704$_H$	—	—	√	√	√	√
TAUD0I5	Type E	DNFA7CTL	FFC3 0700$_H$		DNFA7EN	DNFA7NFENL1	FFC3 0704$_H$	—	—	√	√	√	√
TAUD0I6	Type E	DNFA8CTL	FFC3 0800$_H$		DNFA8EN	DNFA8NFENL0	FFC3 0804$_H$	—	—	√	√	√	√
TAUD0I7	Type E	DNFA8CTL	FFC3 0800$_H$		DNFA8EN	DNFA8NFENL1	FFC3 0804$_H$	—	—	√	√	√	√
TAUD0I8	Type E	DNFA9CTL	FFC3 0900$_H$		DNFA9EN	DNFA9NFENL0	FFC3 0904$_H$	—	—	√	√	√	√
TAUD0I9	Type E	DNFA9CTL	FFC3 0900$_H$		DNFA9EN	DNFA9NFENL1	FFC3 0904$_H$	—	—	√	√	√	√
TAUD0I10	Type E	DNFA9CTL	FFC3 0900$_H$		DNFA9EN	DNFA9NFENL2	FFC3 0904$_H$	—	—	√	√	√	√
TAUD0I11	Type E	DNFA9CTL	FFC3 0900$_H$		DNFA9EN	DNFA9NFENL3	FFC3 0904$_H$	—	—	√	√	√	√
TAUD0I12	Type E	DNFA9CTL	FFC3 0900$_H$		DNFA9EN	DNFA9NFENL4	FFC3 0904$_H$	—	—	√	√	√	√
TAUD0I13	Type E	DNFA9CTL	FFC3 0900$_H$		DNFA9EN	DNFA9NFENL5	FFC3 0904$_H$	—	—	√	√	√	√
TAUD0I14	Type E	DNFA9CTL	FFC3 0900$_H$		DNFA9EN	DNFA9NFENL6	FFC3 0904$_H$	—	—	√	√	√	√
TAUD0I15	Type E	DNFA9CTL	FFC3 0900$_H$		DNFA9EN	DNFA9NFENL7	FFC3 0904$_H$	—	—	√	√	√	√

Table 2.59 List of Input Pins with a Noise Filter (3/6)

Input Pin	Filter Type	Digital Noise Elimination Control Register		Digital Noise Elimination Sampling Clock Source Selection Register	Digital Noise Elimination Enable Register			Filter Control Register		Device			
										100-pin		144-pin	
		Control Register	Address	Sampling Clock Source (DNFCKSnC.CKSCn[1:0])	Control Register	Control Bit	Address	Control Register	Address	eVR	DPS	eVR	DPS
TAUD1I0	Type E	DNFA10CTL	FFC3 0A00$_H$	DNFCKS109C.CKSC109[1:0] 00: Setting prohibited 01: High-speed peripheral clock CLK_HSB 10: High-speed peripheral clock CLK_HSB/2 11: TAUD1TCKEN0	DNFA10EN	DNFA10NFENL0	FFC3 0A04$_H$	—	—	√	√	√	√
TAUD1I1	Type E	DNFA10CTL	FFC3 0A00$_H$		DNFA10EN	DNFA10NFENL1	FFC3 0A04$_H$	—	—	√	√	√	√
TAUD1I2	Type E	DNFA11CTL	FFC3 0B00$_H$		DNFA11EN	DNFA11NFENL0	FFC3 0B04$_H$	—	—	√	√	√	√
TAUD1I3	Type E	DNFA11CTL	FFC3 0B00$_H$		DNFA11EN	DNFA11NFENL1	FFC3 0B04$_H$	—	—	√	√	√	√
TAUD1I4	Type E	DNFA12CTL	FFC3 0C00$_H$		DNFA12EN	DNFA12NFENL0	FFC3 0C04$_H$	—	—	—	—	√	√
TAUD1I5	Type E	DNFA12CTL	FFC3 0C00$_H$		DNFA12EN	DNFA12NFENL1	FFC3 0C04$_H$	—	—	—	—	√	√
TAUD1I6	Type E	DNFA13CTL	FFC3 0D00$_H$		DNFA13EN	DNFA13NFENL0	FFC3 0D04$_H$	—	—	√	√	√	√
TAUD1I7	Type E	DNFA13CTL	FFC3 0D00$_H$		DNFA13EN	DNFA13NFENL1	FFC3 0D04$_H$	—	—	—	—	√	√
TAUD1I8	Type E	DNFA14CTL	FFC3 0E00$_H$		DNFA14EN	DNFA14NFENL0	FFC3 0E04$_H$	—	—	√	√	√	√
TAUD1I9	Type E	DNFA14CTL	FFC3 0E00$_H$		DNFA14EN	DNFA14NFENL1	FFC3 0E04$_H$	—	—	—	—	√	√
TAUD1I10	Type E	DNFA14CTL	FFC3 0E00$_H$		DNFA14EN	DNFA14NFENL2	FFC3 0E04$_H$	—	—	√	√	√	√
TAUD1I11	Type E	DNFA14CTL	FFC3 0E00$_H$		DNFA14EN	DNFA14NFENL3	FFC3 0E04$_H$	—	—	—	—	√	√
TAUD1I12	Type E	DNFA14CTL	FFC3 0E00$_H$		DNFA14EN	DNFA14NFENL4	FFC3 0E04$_H$	—	—	—	—	√	√
TAUD1I13	Type E	DNFA14CTL	FFC3 0E00$_H$		DNFA14EN	DNFA14NFENL5	FFC3 0E04$_H$	—	—	—	—	√	√
TAUD1I14	Type E	DNFA14CTL	FFC3 0E00$_H$		DNFA14EN	DNFA14NFENL6	FFC3 0E04$_H$	—	—	—	—	√	√
TAUD1I15	Type E	DNFA14CTL	FFC3 0E00$_H$		DNFA14EN	DNFA14NFENL7	FFC3 0E04$_H$	—	—	—	—	√	√

Table 2.59 List of Input Pins with a Noise Filter (4/6)

Input Pin	Filter Type	Digital Noise Elimination Control Register		Digital Noise Elimination Sampling Clock Source Selection Register	Digital Noise Elimination Enable Register			Filter Control Register		Device			
										100-pin		144-pin	
		Control Register	Address	Sampling Clock Source (DNFCKSnC.CKSCn[1:0])	Control Register	Control Bit	Address	Control Register	Address	eVR	DPS	eVR	DPS
TAUD2I0	Type E	DNFA15CTL	FFC3 0F00$_H$	DNFCKS110C.CKSC110[1:0] 00: Setting prohibited 01: High-speed peripheral clock CLK_HSB 10: High-speed peripheral clock CLK_HSB/2 11: TAUD2TCKEN0	DNFA15EN	DNFA15NFENL0	FFC3 0F04$_H$	—	—	√	√	√	√
TAUD2I1	Type E	DNFA15CTL	FFC3 0F00$_H$		DNFA15EN	DNFA15NFENL1	FFC3 0F04$_H$	—	—	√	√	√	√
TAUD2I2	Type E	DNFA16CTL	FFC3 1000$_H$		DNFA16EN	DNFA16NFENL0	FFC3 1004$_H$	—	—	√	√	√	√
TAUD2I3	Type E	DNFA16CTL	FFC3 1000$_H$		DNFA16EN	DNFA16NFENL1	FFC3 1004$_H$	—	—	√	√	√	√
TAUD2I4	Type E	DNFA17CTL	FFC3 1100$_H$		DNFA17EN	DNFA17NFENL0	FFC3 1104$_H$	—	—	—	—	√	√
TAUD2I5	Type E	DNFA17CTL	FFC3 1100$_H$		DNFA17EN	DNFA17NFENL1	FFC3 1104$_H$	—	—	—	—	√	√
TAUD2I6	Type E	DNFA18CTL	FFC3 1200$_H$		DNFA18EN	DNFA18NFENL0	FFC3 1204$_H$	—	—	—	—	√	√
TAUD2I7	Type E	DNFA18CTL	FFC3 1200$_H$		DNFA18EN	DNFA18NFENL1	FFC3 1204$_H$	—	—	√	√	√	√
TAUD2I8	Type E	DNFA19CTL	FFC3 1300$_H$		DNFA19EN	DNFA19NFENL0	FFC3 1304$_H$	—	—	—	—	√	√
TAUD2I9	Type E	DNFA19CTL	FFC3 1300$_H$		DNFA19EN	DNFA19NFENL1	FFC3 1304$_H$	—	—	—	—	√	√
TAUD2I10	Type E	DNFA19CTL	FFC3 1300$_H$		DNFA19EN	DNFA19NFENL2	FFC3 1304$_H$	—	—	—	—	√	√
TAUD2I11	Type E	DNFA19CTL	FFC3 1300$_H$		DNFA19EN	DNFA19NFENL3	FFC3 1304$_H$	—	—	√	√	√	√
TAUD2I12	Type E	DNFA19CTL	FFC3 1300$_H$		DNFA19EN	DNFA19NFENL4	FFC3 1304$_H$	—	—	√	√	√	√
TAUD2I13	Type E	DNFA19CTL	FFC3 1300$_H$		DNFA19EN	DNFA19NFENL5	FFC3 1304$_H$	—	—	√	√	√	√
TAUD2I14	Type E	DNFA19CTL	FFC3 1300$_H$		DNFA19EN	DNFA19NFENL6	FFC3 1304$_H$	—	—	√	√	√	√
TAUD2I15	Type E	DNFA19CTL	FFC3 1300$_H$		DNFA19EN	DNFA19NFENL7	FFC3 1304$_H$	—	—	√	√	√	√
TAUJ0I0	Type E	DNFA20CTL	FFC3 1400$_H$	DNFCKS112C.CKSC112[1:0] 00: Setting prohibited 01: High-speed peripheral clock CLK_HSB 10: High-speed peripheral clock CLK_HSB/2 11: TAUJ0TCKEN0	DNFA20EN	DNFA20NFENL0	FFC3 1404$_H$	—	—	√	√	√	√
TAUJ0I1	Type E	DNFA21CTL	FFC3 1500$_H$		DNFA21EN	DNFA21NFENL0	FFC3 1504$_H$	—	—	√	√	√	√
TAUJ0I2	Type E	DNFA22CTL	FFC3 1600$_H$		DNFA22EN	DNFA22NFENL0	FFC3 1604$_H$	—	—	√	√	√	√
TAUJ0I3	Type E	DNFA23CTL	FFC3 1700$_H$		DNFA23EN	DNFA23NFENL0	FFC3 1704$_H$	—	—	√	√	√	√
TAUJ1I0	Type E	DNFA24CTL	FFC3 1800$_H$	DNFCKS113C.CKSC113[1:0] 00: Setting prohibited 01: High-speed peripheral clock CLK_HSB 10: High-speed peripheral clock CLK_HSB/2 11: TAUJ1TCKEN0	DNFA24EN	DNFA24NFENL0	FFC3 1804$_H$	—	—	√	√	√	√
TAUJ1I1	Type E	DNFA25CTL	FFC3 1900$_H$		DNFA25EN	DNFA25NFENL0	FFC3 1904$_H$	—	—	√	√	√	√
TAUJ1I2	Type E	DNFA26CTL	FFC3 1A00$_H$		DNFA26EN	DNFA26NFENL0	FFC3 1A04$_H$	—	—	√	√	√	√
TAUJ1I3	Type E	DNFA27CTL	FFC3 1B00$_H$		DNFA27EN	DNFA27NFENL0	FFC3 1B04$_H$	—	—	√	√	√	√
TAUJ2I0	Type E	DNFA28CTL	FFC3 1C00$_H$	DNFCKS114C.CKSC114[1:0] 00: Setting prohibited 01: High-speed peripheral clock CLK_HSB 10: High-speed peripheral clock CLK_HSB/2 11: TAUJ2TCKEN0	DNFA28EN	DNFA28NFENL0	FFC3 1C04$_H$	—	—	√	√	√	√
TAUJ2I1	Type E	DNFA29CTL	FFC3 1D00$_H$		DNFA29EN	DNFA29NFENL0	FFC3 1D04$_H$	—	—	√	√	√	√
TAUJ2I2	Type E	DNFA30CTL	FFC3 1E00$_H$		DNFA30EN	DNFA30NFENL0	FFC3 1E04$_H$	—	—	√	√	√	√
TAUJ2I3	Type E	DNFA31CTL	FFC3 1F00$_H$		DNFA31EN	DNFA31NFENL0	FFC3 1F04$_H$	—	—	√	√	√	√

Table 2.59 List of Input Pins with a Noise Filter (5/6)

Input Pin	Filter Type	Digital Noise Elimination Control Register		Digital Noise Elimination Sampling Clock Source Selection Register	Digital Noise Elimination Enable Register			Filter Control Register		Device			
										100-pin		144-pin	
		Control Register	Address	Sampling Clock Source (DNFCKSnC.CKSCn[1:0])	Control Register	Control Bit	Address	Control Register	Address	eVR	DPS	eVR	DPS
TSG30PTSI0/ENCA0E0	Type E	DNFA32CTL	FFC3 2000_H	DNFCKS104C.CKSC104[1:0] 00: Setting prohibited 01: High-speed peripheral clock CLK_HSB 10: High-speed peripheral clock CLK_HSB/2 11: Setting prohibited	DNFA32EN	DNFA32NFENL0	FFC3 2004_H	—	—	√	√	√	√
TSG30PTSI1/ENCA0E1	Type E	DNFA32CTL	FFC3 2000_H		DNFA32EN	DNFA32NFENL1	FFC3 2004_H	—	—	√	√	√	√
TSG30PTSI2/ENCA0EC	Type E	DNFA33CTL	FFC3 2100_H		DNFA33EN	DNFA33NFENL0	FFC3 2104_H	—	—	√	√	√	√
TSG30CLKI	Type E	DNFA34CTL	FFC3 2200_H		DNFA34EN	DNFA34NFENL0	FFC3 2204_H	—	—	√	√	√	√
TSG31PTSI0/ENCA1E0	Type E	DNFA35CTL	FFC3 2300_H	DNFCKS105C.CKSC105[1-0] 00: Setting prohibited 01: High-speed peripheral clock CLK_HSB 10: High-speed peripheral clock CLK_HSB/2 11: Setting prohibited	DNFA35EN	DNFA35NFENL0	FFC3 2304_H	—	—	√	√	√	√
TSG31PTSI1/ENCA1E1	Type E	DNFA35CTL	FFC3 2300_H		DNFA35EN	DNFA35NFENL1	FFC3 2304_H	—	—	√	√	√	√
TSG31PTSI2/ENCA1EC	Type E	DNFA36CTL	FFC3 2400_H		DNFA36EN	DNFA36NFENL0	FFC3 2404_H	—	—	√	√	√	√
TSG31CLKI	Type E	DNFA37CTL	FFC3 2500_H		DNFA37EN	DNFA37NFENL0	FFC3 2504_H	—	—	—	—	√	√
ENCA0TIN0	Type E	DNFA38CTL	FFC3 2600_H	DNFCKS104C.CKSC104[1:0] 00: Setting prohibited 01: High-speed peripheral clock CLK_HSB 10: High-speed peripheral clock CLK_HSB/2 11: Setting prohibited	DNFA38EN	DNFA38NFENL0	FFC3 2604_H			—	—	√	√
ENCA0TIN1	Type E	DNFA38CTL	FFC3 2600_H		DNFA38EN	DNFA38NFENL1	FFC3 2604_H			—	—	√	√
ENCA1TIN0	Type E	DNFA39CTL	FFC3 2700_H	DNFCKS105C.CKSC105[1:0] 00: Setting prohibited 01: High-speed peripheral clock CLK_HSB 10: High-speed peripheral clock CLK_HSB/2 11: Setting prohibited	DNFA39EN	DNFA39NFENL0	FFC3 2704_H			—	—	√	√
ENCA1TIN1	Type E	DNFA39CTL	FFC3 2700_H		DNFA39EN	DNFA39NFENL1	FFC3 2704_H			—	—	√	√
CSIG0RYI	Type F	DNFA40CTL	FFC3 2800_H	DNFCKS102C.CKSC102[1:0] 00: Setting prohibited 01: High-speed peripheral clock CLK_HSB 10: High-speed peripheral clock CLK_HSB/2 11: Setting prohibited	DNFA40EN	DNFA40NFENL0	FFC3 2804_H	—	—	√	√	√	√
CSIH0RYI	Type F	DNFA40CTL	FFC3 2800_H		DNFA40EN	DNFA40NFENL1	FFC3 2804_H	—	—	√	√	√	√
CSIH1RYI	Type F	DNFA40CTL	FFC3 2800_H		DNFA40EN	DNFA40NFENL2	FFC3 2804_H	—	—	√	√	√	√
CSIH2RYI	Type F	DNFA40CTL	FFC3 2800_H		DNFA40EN	DNFA40NFENL3	FFC3 2804_H	—	—	√	√	√	√
CSIH3RYI	Type F	DNFA40CTL	FFC3 2800_H		DNFA40EN	DNFA40NFENL4	FFC3 2804_H	—	—	√	√	√	√
ADCDTRG0	Type F	DNFA41CTL	FFC3 2900_H	DNFCKS101C.CKSC101[1:0] 00: Setting prohibited 01: High-speed peripheral clock CLK_HSB 10: High-speed peripheral clock CLK_HSB/2 11: Setting prohibited	DNFA41EN	DNFA41NFENL0	FFC3 2904_H	—	—	√	√	√	√
ADCDTRG1	Type F	DNFA41CTL	FFC3 2900_H		DNFA41EN	DNFA41NFENL1	FFC3 2904_H	—	—	√	√	√	√
SENT0RX	Type D	DNFA42CTL	FFC3 $2A00_H$	DNFCKS106C.CKSC106[1:0] 00: Setting prohibited 01: High-speed peripheral clock CLK_HSB 10: High-speed peripheral clock CLK_HSB/2 11: Setting prohibited	DNFA42EN	DNFA42NFENL0	FFC3 $2A04_H$	FCLA3CTL0	FFC3 4060_H	√	√	√	√
SENT1RX	Type D	DNFA42CTL	FFC3 $2A00_H$		DNFA42EN	DNFA42NFENL1	FFC3 $2A04_H$	FCLA3CTL1	FFC3 4064_H	√	√	√	√
SENT2RX	Type D	DNFA42CTL	FFC3 $2A00_H$		DNFA42EN	DNFA42NFENL2	FFC3 $2A04_H$	FCLA3CTL2	FFC3 4068_H	—	—	√	√
SENT3RX	Type D	DNFA42CTL	FFC3 $2A00_H$		DNFA42EN	DNFA42NFENL3	FFC3 $2A04_H$	FCLA3CTL3	FFC3 406C H	√	√	√	√
SENT4RX	Type D	DNFA42CTL	FFC3 $2A00_H$		DNFA42EN	DNFA42NFENL4	FFC3 $2A04_H$	FCLA3CTL4	FFC3 4070_H	√	√	√	√
SENT5RX	Type D	DNFA42CTL	FFC3 $2A00_H$		DNFA42EN	DNFA42NFENL5	FFC3 $2A04_H$	FCLA3CTL5	FFC3 4074_H	√	√	√	√

Table 2.59 List of Input Pins with a Noise Filter (6/6)

Input Pin	Filter Type	Digital Noise Elimination Control Register		Digital Noise Elimination Sampling Clock Source Selection Register	Digital Noise Elimination Enable Register			Filter Control Register		Device			
										100-pin		144-pin	
		Control Register	Address	Sampling Clock Source (DNFCKSnC.CKSCn[1:0])	Control Register	Control Bit	Address	Control Register	Address	eVR	DPS	eVR	DPS
PSI50DIN	Type D	DNFA43CTL	FFC3 2B00$_H$	DNFCKS107C.CKSC107[1:0] 00: Setting prohibited 01: High-speed peripheral clock CLK_HSB 10: High-speed peripheral clock CLK_HSB/2 11: Setting prohibited	DNFA43EN	DNFA43NFENL0	FFC3 2B04$_H$	FCLA4CTL0	FFC3 4080$_H$	√	√	√	√
PSI51DIN	Type D	DNFA43CTL	FFC3 2B00$_H$		DNFA43EN	DNFA43NFENL1	FFC3 2B04$_H$	FCLA4CTL1	FFC3 4084$_H$	√	√	√	√
$\overline{\text{RESET}}$	ANF	—	—	—	—	—	—	—	—	√	√	√	√
$\overline{\text{DCUTRST}}$	ANF	—	—	—	—	—	—	—	—	√	√	√	√
FLMD0	ANF	—	—	—	—	—	—	—	—	√	√	√	√

Note 1. Only available in devices with 2-MB flash memory.

Note 2. Only available in devices with 2-MB and 1-MB memories.

2.6.2 Filter Type

2.6.2.1 Digital Filter Type A (INTP/RXD Alternative) Input Pin

The input pin of digital filter type A has a digital filter and the edge detection function. The digital filter and edge detection are controlled with the following registers. Interrupt signals and data received signals of peripheral functions are shared.

- Filter control register FCLAnCTLm
  Ports with each digital filter have the dedicated FCLAnCTLm register.
- Digital noise elimination control register DNFAnCTL
  Each DNFAnCTL control register controls digital filter processing.
- Digital noise elimination enable register DNFAnEN
  The register enables or disables digital noise elimination.

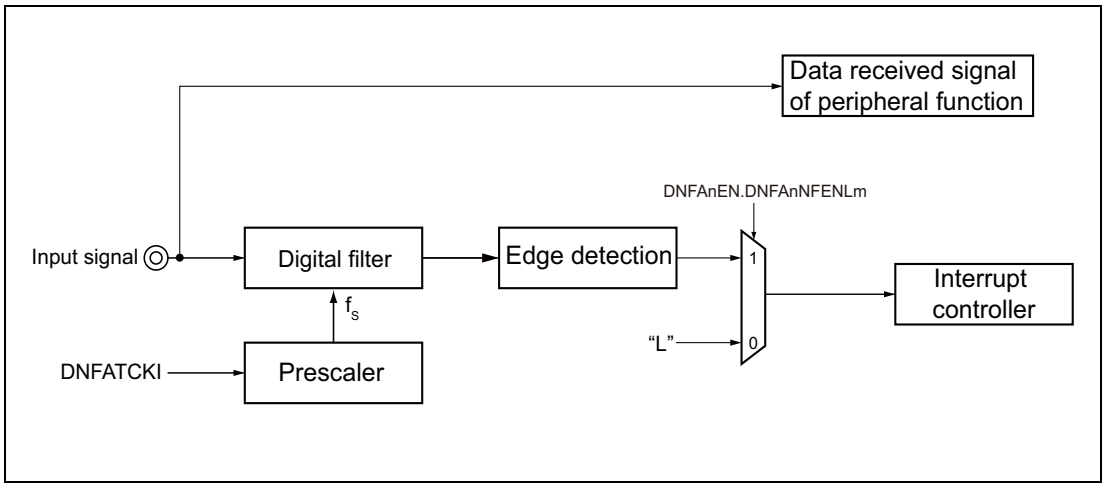

Figure 2.10 Block Diagram of Digital Filter Type A

CAUTION

Set DNFAnEN.DNFAnNFENLm to 1 to enable input to interrupt controller.

2.6.2.2 Digital Filter Type B (INTP/ESO Alternative) Input Pin

The input pin of digital filter type B has a digital filter, analog filter, and the edge detection function. The digital filter and edge detection are controlled with the following registers. Interrupt signals and Hi-Z output control signals are shared.

- Filter control register FCLAnCTLm
  Ports with each digital filter have the dedicated FCLAnCTLm register.
- Digital noise elimination control register DNFAnCTL
  Each DNFAnCTL control register controls digital filter processing.
- Digital noise elimination enable register DNFAnEN
  The register selects a digital filter or analog filter.

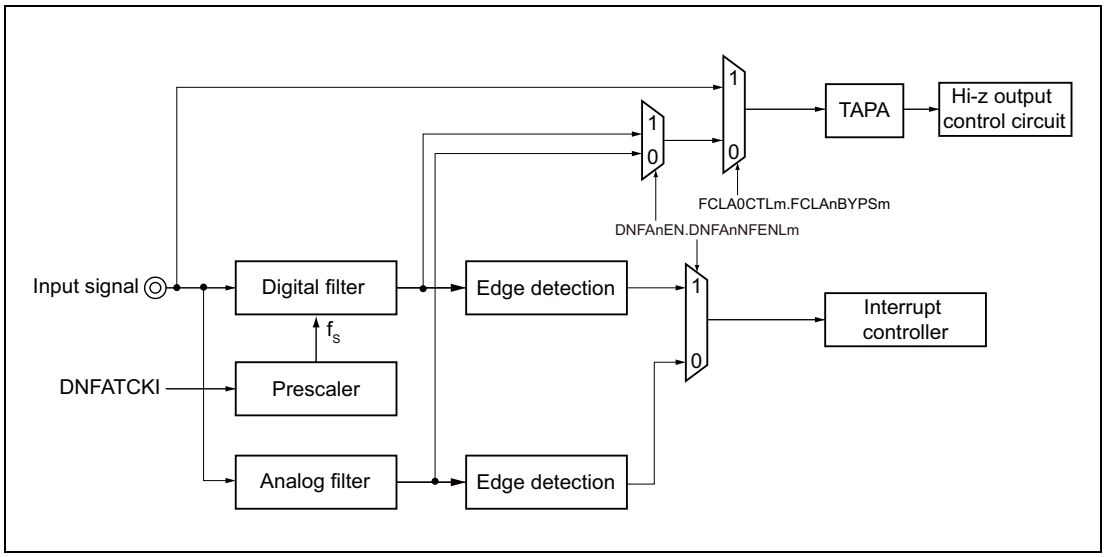

Figure 2.11 Block Diagram of Digital Filter Type B

2.6.2.3 Digital Filter Type C (for INTP9 and NMI) Input Pin

The input pin of digital filter type C has a digital filter and the edge detection function. The digital filter and edge detection are controlled with the following registers.

- Filter control register FCLAnCTLm
  Ports with each digital filter have the dedicated FCLAnCTLm register.
- Digital noise elimination control register DNFAnCTL
  Each DNFAnCTL control register controls digital filter processing.
- Digital noise elimination enable register DNFAnEN
  The register enables or disables digital noise elimination.

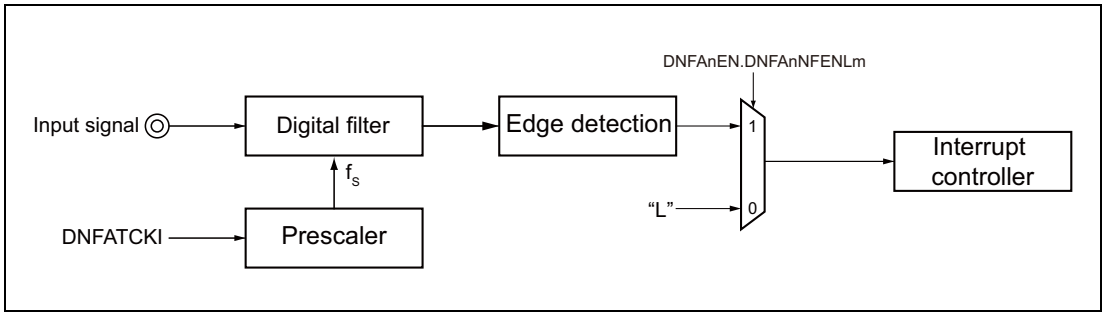

Figure 2.12 Block Diagram of Digital Filter Type C

CAUTION

Set DNFAnEN.DNFAnNFENLm to 1 to enable input to interrupt controller.

2.6.2.4 Digital Filter Type D (for SENT, PSI5) Input Pin

The input pin of digital filter type D has a digital filter and analog filter. The digital filter and analog filter are controlled with the following registers.

- Filter control register FCLAnCTLm
  The dedicated FCLAnCTLm register is available for each port with digital filter.
- Digital noise elimination control register DNFAnCTL
  Each DNFAnCTL control register controls digital filter processing.
- Digital noise elimination enable register DNFAnEN
  The register selects a digital filter or analog filter.

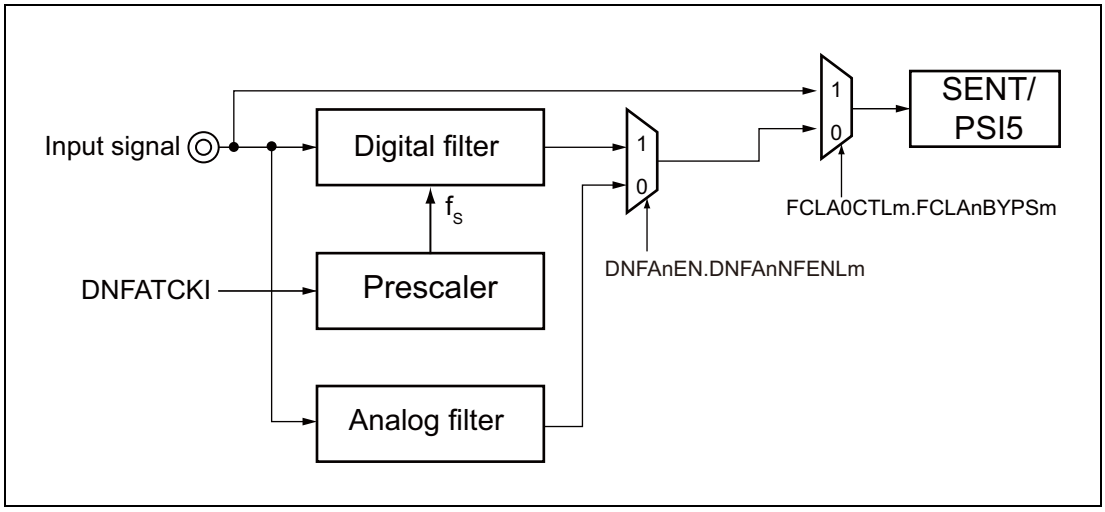

Figure 2.13 Block Diagram of Digital Filter Type D

2.6.2.5 Digital Filter Type E (No Edge Detection) Input Pin

The input pin of digital filter type E has a digital filter. The digital filter is controlled with the following register.

- Digital noise elimination control register DNFAnCTL
  Each DNFAnCTL control register controls digital filter processing.
- Digital noise elimination enable register DNFAnEN
  This register enables or disables digital noise elimination.

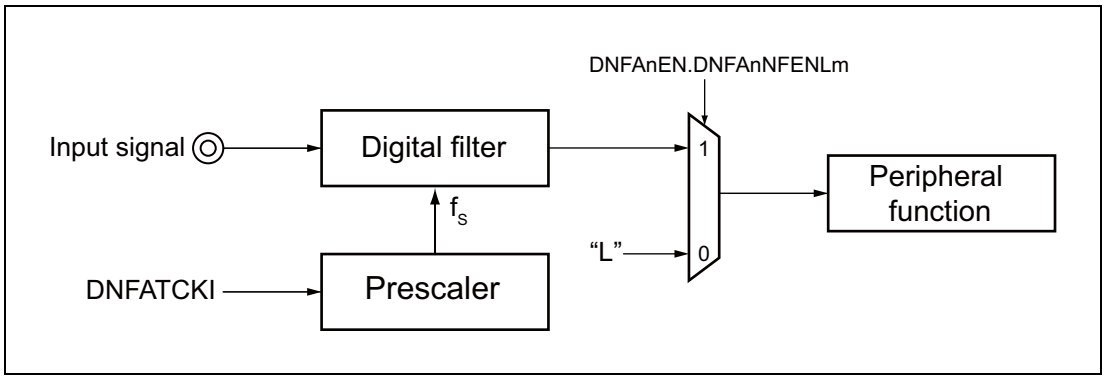

Figure 2.14 Block Diagram of Digital Filter Type E

2.6.2.6 Digital Filter Type F (No Edge Detection) Input Pin

The input pin of digital filter type F has a digital filter. The digital filter is controlled with the following register.

- Digital noise elimination control register DNFAnCTL
  Each DNFAnCTL control register controls digital filter processing.
- Digital noise elimination enable register DNFAnEN
  This register enables or disables digital noise elimination.

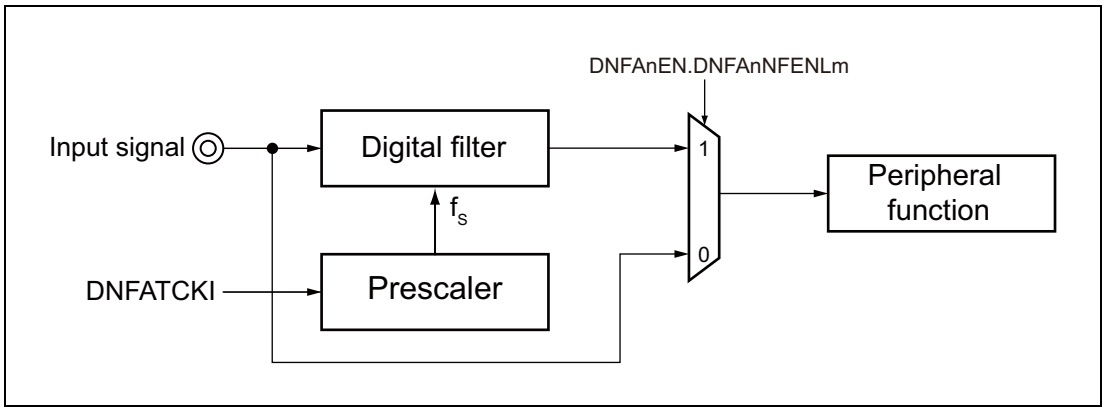

Figure 2.15 Block Diagram of Digital Filter Type F

2.6.2.7 Analog Filter ANF Input Pin

The analog filter input pin has only an analog filter.

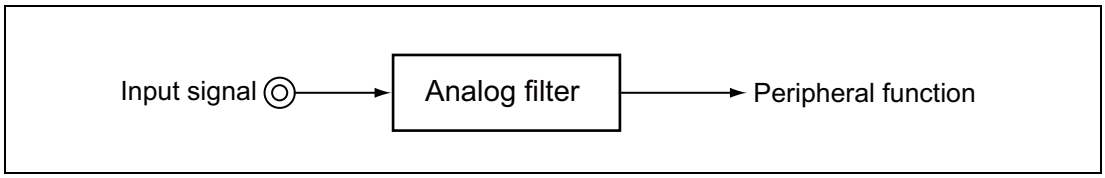

Figure 2.16 Block Diagram of Analog Filter ANF

2.6.3 Registers

2.6.3.1 List of Registers

The digital noise filter is controlled and operated by the following registers.

Table 2.60 List of Digital Noise Filter Registers

Register Name	Symbol	Address
Filter control register	FCLAnCTLm	See **Table 2.59, List of Input Pins with a Noise Filter**.
Digital noise elimination control register	DNFAnCTL	FFC3 0000_H + n × 100_H
Digital noise elimination enable register	DNFAnEN	FFC3 0000_H + n × 100_H + 4_H
Digital noise elimination enable register L	DNFAnENL	FFC3 0000_H + n × 100_H + C_H
Digital noise elimination sampling clock source select register	DNFCKSnC	See **Section 2.6.3.6, DNFCKSnC — Digital Noise Elimination Sampling Clock Source Selection Register**.
Digital noise elimination sampling clock source status register	DNFCSCnSTAT	See **Section 2.6.3.7, DNFCSCnSTAT — Digital Noise Elimination Sampling Clock Source Status Register**.

CAUTIONS

1. **Do not change any setting of any related control register (FCLAnCTLm, DNFAnCTL, DNFAnEN, DNFAnENL, and DNFCKSnC) while the digital filter is enabled (DNFAnEN.DNFAnNFENLm = 1). Attempting to change any of the settings may lead to unexpected output from the filter.**
2. **Each of the registers has bits to which no function is assigned. Unless otherwise specified, do not write any value other than the initial value to these bits. Correct operation cannot be guaranteed if writing of other values is attempted.**

2.6.3.2 FCLAnCTLm — Filter Control Register

This register controls the analog and digital filter operation.

Operations differ according to the file type. For details, see **Section 2.6.2, Filter Type**.

Access: This register can be read or written in 8-bit or 1-bit units.

Address: The allocation of input signals to FCLAnCTLm registers and the address of each register are shown in the tables in **Table 2.59, List of Input Pins with a Noise Filter**.

Value after reset: 00_H

Bit	7	6	5	4	3	2	1	0
	FCLAnBYPSm	—	—	—	—	—	FCLAnINTFm	FCLAnINTRm
Value after reset	0	0	0	0	0	0	0	0
R/W	R/W	R	R	R	R	R	R/W	R/W

Table 2.61 FCLAnCTLm Register Contents

Bit Position	Bit Name	Function
7	FCLAnBYPSm	Filter and bypass control of the alternative function 0: Filters and bypasses are disabled. 1: Filters and bypasses are enabled.
6 to 2	Reserved	When read, the value after reset is read. When writing, write the value after reset.
1	FCLAnINTFm	Falling edge detection control 0: Falling edge detection disabled 1: Falling edge detection enabled
0	FCLAnINTRm	Rising edge detection control 0: Rising edge detection disabled 1: Rising edge detection enabled

NOTE

For details about the relevant Pins, see **Table 2.59, List of Input Pins with a Noise Filter**.

2.6.3.3 DNFAnCTL — Digital Noise Elimination Control Register

This register specifies characteristics of the digital noise elimination filter.

Access: This register can be read/written in 8-bit units.

Address: For the correspondence between the DNFAnCTL register and input signals, and the addresses of individual registers, see **Table 2.59, List of Input Pins with a Noise Filter**.

Value after reset: 00_H

Bit	7	6	5	4	3	2	1	0
	—	DNFAnNFSTS[1:0]		—	—	DNFAnPRS[2:0]		
Value after reset	0	0	0	0	0	0	0	0
R/W	R	R/W	R/W	R	R	R/W	R/W	R/W

Table 2.62 DNFAnCTL Register Contents

Bit Position	Bit Name	Function
7	Reserved	When read, the value after reset is read. When writing, write the value after reset.
6, 5	DNFAnNFSTS [1:0]	The DNFAnNFSTS[1:0] bits specify the number of samples used to judge whether an external signal pulse is valid.

DNFAnNFSTS[1:0]	Number of Samples
00_B	2
01_B	3
10_B	4
11_B	5

Bit Position	Bit Name	Function
4, 3	Reserved	When read, the value after reset is read. When writing, write the value after reset.
2 to 0	DNFAnPRS [2:0]	Selects a digital filter sampling clock frequency

DNFAnPRS[2:0]	Sampling Frequency
000_B	DNFATCKI / 1
001_B	DNFATCKI / 2
010_B	DNFATCKI / 4
011_B	DNFATCKI / 8
100_B	DNFATCKI / 16
101_B	DNFATCKI / 32
110_B	DNFATCKI / 64
111_B	DNFATCKI / 128

NOTE

For details about the relevant Pins, see **Table 2.59, List of Input Pins with a Noise Filter**.

2.6.3.4 DNFAnEN — Digital Noise Elimination Enable Register

This register enables or disables digital noise elimination for an arbitrary input signal.

Operations differ according to the file type. For details, see **Section 2.6.2, Filter Type**.

Access: This register can be read/written in 16-bit units.

Address: For the correspondence between the DNFAnEN register and input signals, and the addresses of individual registers, see **Table 2.59, List of Input Pins with a Noise Filter**.

Value after reset: 0000_H

Bit	15	14	13	12	11	10	9	8	7	6	5	4	3	2	1	0
	—	—	—	—	—	—	—	—	DNFAn NFENL7	DNFAn NFENL6	DNFAn NFENL5	DNFAn NFENL4	DNFAn NFENL3	DNFAn NFENL2	DNFAn NFENL1	DNFAn NFENL0
Value after reset	0	0	0	0	0	0	0	0	0	0	0	0	0	0	0	0
R/W	R	R	R	R	R	R	R	R	R/W	R/W	R/W	R/W	R/W	R/W	R/W	R/W

Table 2.63 DNFAnEN Register Contents

Bit Position	Bit Name	Function
15 to 8	Reserved	When read, the value after reset is read. When writing, write the value after reset.
7 to 0	DNFAnNFENL [7:0]	Digital Noise Elimination Control 0: Digital noise elimination disabled (Analog noise elimination is enabled.)*1 1: Digital noise elimination enabled

Note 1. For digital filter type B and D

NOTE

- For details about the relevant Pins, see **Table 2.59, List of Input Pins with a Noise Filter**.
- Bits DNFAnNFENL[7:0] which are not listed in the List of Input Pins with Noise Filter are reserved. When read, the value after reset is read. When writing, write the value after reset.

2.6.3.5 DNFAnENL — Digital Noise Elimination Enable Register

Settings in this register correspond to those of the 8 low-order bits of the DNFAnEN register.

Access: This register can be read/written 8- and 1- bit units.

Address: FFC3 $0000_H + n \times 100_H + C_H$

Value after reset: 00_H

Bit	7	6	5	4	3	2	1	0
	DNFAn NFENL7	DNFAn NFENL6	DNFAn NFENL5	DNFAn NFENL4	DNFAn NFENL3	DNFAn NFENL2	DNFAn NFENL1	DNFAn NFENL0
Value after reset	0	0	0	0	0	0	0	0
R/W	R/W	R/W	R/W	R/W	R/W	R/W	R/W	R/W

For details of the respective bit functions, see **Section 2.6.3.4, DNFAnEN — Digital Noise Elimination Enable Register**.

2.6.3.6 DNFCKSnC — Digital Noise Elimination Sampling Clock Source Selection Register

This register selects the clock source for digital noise sampling clock frequency (DNFATCKI). (n = 100 to 114)

Access: This register can be read / written in 32-bit units.

Address:
DNFCKS100C FFF8 9100$_H$
DNFCKS101C FFF8 9108$_H$
DNFCKS106C FFF8 9110$_H$
DNFCKS107C FFF8 9118$_H$
DNFCKS108C FFF8 9120$_H$
DNFCKS109C FFF8 9128$_H$
DNFCKS110C FFF8 9130$_H$
DNFCKS112C FFF8 9138$_H$
DNFCKS113C FFF8 9140$_H$
DNFCKS114C FFF8 9148$_H$
DNFCKS104C FFF8 9150$_H$
DNFCKS105C FFF8 9158$_H$
DNFCKS102C FFF8 9160$_H$

Value after reset: 0000 0002$_H$

Bit	31	30	29	28	27	26	25	24	23	22	21	20	19	18	17	16
	—	—	—	—	—	—	—	—	—	—	—	—	—	—	—	—
Value after reset	0	0	0	0	0	0	0	0	0	0	0	0	0	0	0	0
R/W	R	R	R	R	R	R	R	R	R	R	R	R	R	R	R	R

Bit	15	14	13	12	11	10	9	8	7	6	5	4	3	2	1	0
	—	—	—	—	—	—	—	—	—	—	—	—	—	CKSCn [1:0]		—
Value after reset	0	0	0	0	0	0	0	0	0	0	0	0	0	0	1	0
R/W	R	R	R	R	R	R	R	R	R	R	R	R	R	R/W	R/W	R

Table 2.64 DNFCKSnC Register Contents

Bit Position	Bit Name	Function
31 to 3	Reserved	When read, the value after reset is read. When writing, write the value after reset.
2, 1	CKSCn[1:0]	These bits specify the sampling frequency of the source clock used to judge whether an external signal pulse is valid.

CKSCn1	CKSCn0	Sampling Clock Source
0	0	Setting prohibited
0	1	Selects a clock source for digital filter sampling clock frequency (DNFATCKI). DNFATCKI differs depending on the relevant input signal. For details, see **Table 2.59, List of Input Pins with a Noise Filter**.
1	0	
1	1	

Bit Position	Bit Name	Function
0	Reserved	When read, the value after reset is read. When writing, write the value after reset.

2.6.3.7 DNFCSCnSTAT — Digital Noise Elimination Sampling Clock Source Status Register

This register is used to check the status of the sampling clock source for digital noise sampling clock (DNFATCKI). (n = 100 to 114)

Access: This register can be read only in 32-bit units.

Address: DNFCSC100STAT FFF8 9104_H
DNFCSC101STAT FFF8 $910C_H$
DNFCSC106STAT FFF8 9114_H
DNFCSC107STAT FFF8 $911C_H$
DNFCSC108STAT FFF8 9124_H
DNFCSC109STAT FFF8 $912C_H$
DNFCSC110STAT FFF8 9134_H
DNFCSC112STAT FFF8 $913C_H$
DNFCSC113STAT FFF8 9144_H
DNFCSC114STAT FFF8 $914C_H$
DNFCSC104STAT FFF8 9154_H
DNFCSC105STAT FFF8 $915C_H$
DNFCSC102STAT FFF8 9164_H

Value after reset: $0000\ 0003_H$

Bit	31	30	29	28	27	26	25	24	23	22	21	20	19	18	17	16
	—	—	—	—	—	—	—	—	—	—	—	—	—	—	—	—
Value after reset	0	0	0	0	0	0	0	0	0	0	0	0	0	0	0	0
R/W	R	R	R	R	R	R	R	R	R	R	R	R	R	R	R	R

Bit	15	14	13	12	11	10	9	8	7	6	5	4	3	2	1	0
	—	—	—	—	—	—	—	—	—	—	—	—	—	CLKSELn[1:0]		CLK ACTn
Value after reset	0	0	0	0	0	0	0	0	0	0	0	0	0	0	1	1
R/W	R	R	R	R	R	R	R	R	R	R	R	R	R	R	R	R

Table 2.65 DNFCSCnSTAT Register Contents

Bit Position	Bit Name	Function
31 to 3	Reserved	When read, the value after reset is read. When writing, write the value after reset.
2, 1	CLKSELn[1:0]	Sampling clock source selected can be checked.
0	CLKACTn	Operation of clock source selected by the DNFCKSnC Register can be checked. 0: The clock source stops 1: The clock source in operation

CKSCn1	CKSCn0	Number of Samples
0	0	Setting prohibited
0	1	Clock source (DNFATCKI) selected by the DNFCKSnC Register can be checked. DNFATCKI differs depending on the relevant input signal. For details, see **Table 2.59, List of Input Pins with a Noise Filter**.
1	0	
1	1	

2.6.4 Notes for Digital Noise Filter

(1) When digital filter output signal is input for alternative function:
Enable the digital filter (DNFAnEN.DNFAnENm (m = 0 to 7) = 1), and switch the port pin to alternative function after a lapse of the following time.

s = DNFAnNFSTS[1:0] + 2
Time = s × 1/fs + 2 × 1/DNFATCKI

(2) When an event output signal of the digital filter is used as an interrupt:
Enable the digital filter (DNFAnEN.DNFAnENm (m = 0 to 7) = 1 while interrupt is disabled.
Enable the digital filter and clear the interrupt request flag after a lapse of the following time, then enable the interrupt.

Time = s × 1/fs + 3 × 1/DNFATCKI

2.7 Pin State

Table 2.66, **Table 2.67**, and **Table 2.68** show detailed pin states. Some pins may be excluded depending on grades and packages of the product. For the pins included in each product, see **Table 2.1, Pin Assignment**, in **Section 2.1, Pin Connection Diagram**.

Table 2.66 Pin State in Single Chip Mode (Normal Mode)

Port	Pin Category	OPAUDR/ OPJTAG/ OPEVTI/ OPEVTO	Power OFF	$\overline{\text{DCUTRST}}$ = L				
				$\overline{\text{RESET}}$ pin = L Power ON	Reset Release[Note]	HW-BIST	RUN (User program)	CVM Reset
GPIO		—	—	Hi-Z	Hi-Z	Hi-Z	Operate	Hi-Z
P0_3 to P0_9	GPIO (/AUDR)	OPAUDR = 1	—	Hi-Z	Hi-Z	Hi-Z	Operate	Hi-Z
	$\overline{\text{AUDRST}}$	OPAUDR = 0	—	Hi-Z	Hi-Z	Hi-Z	Operate	Hi-Z
	AUDCK							
	$\overline{\text{AUDSYNC}}$							
	AUDATA[3:0]							
JP0_x	JP0_0 to JP0_3, JP0_5	OPJTAG = 00	—	Hi-Z	Hi-Z	Hi-Z	Operate	Hi-Z
	DCUTDI	OPJTAG = 11	—					
	DCUTDO							
	DCUTCK							
	DCUTMS							
	$\overline{\text{DCUTRDY}}$							
	LPDI	OPJTAG = 01	—					
	LPDO							
	LPDCLK							
	JP0_3							
	LPDCLKOUT							
	LPDIO	OPJTAG = 10	—					
	JP0_1 to P0_3, JP0_5							
P0_13	GPIO (EVTI)	OPEVTI = 1	—	Hi-Z			Operate	Hi-Z
	$\overline{\text{EVTI}}$	OPEVTI = 0	—					
$\overline{\text{RESET}}$		—	—	L (PD)	H (PD)	H (PD)	H (PD)	H (PD)
$\overline{\text{ERROROUT}}$		—	—	Hi-Z before $\overline{\text{RESET}}$ is released.	L	L	Operate	Hi-Z
P0_10	$\overline{\text{RESETOUT}}$ (/GPIO)	OPEVTO = 1 or $\overline{\text{DCUTRST}}$ = L	—	L	L	L	H*3 (set "High" by user program)	L
	$\overline{\text{EVTO}}$	OPEVTO = 0 and $\overline{\text{DCUTRST}}$ = H	—	N.A.	N.A.	N.A.	N.A.	N.A.
$\overline{\text{CVMOUT}}$		—	—	L → H*1	H	H	H	L
FLMD0*2		—	—	L (PD)	L (PD)	L (PD)	L (PD)	L (PD)
P3_14	FLMD1(/GPIO)	—	—	Hi-Z	Hi-Z	Hi-Z	Operate*3	Hi-Z
X1/X2		—	—	Stop → Run	Run	Run	Run	Run
ANI		—	—	Hi-Z	Hi-Z	Hi-Z	Operate	Hi-Z
$\overline{\text{DCUTRST}}$		—	—	L (PD)	L (PD)	L (PD)	L (PD)	L (PD)

Note: The states listed in the table are those following release from a pin reset, ECM reset, SW reset, or CVM reset.

Note 1. The $\overline{\text{CVMOUT}}$ pin retains the state of its voltage once it has been driven high even if the pin reset signal is driven to the low level.

Note 2. Drive FLMD0 low.

Note 3. This pin functions as a port pin.

Table 2.67 Pin State in Single Chip Mode (Debug Mode)

Port	Pin Category	OPAUDR/ OPJTAG/ OPEVTI/ OPEVTO	$\overline{\text{DCUTRST}}$ = H				
			RUN	$\overline{\text{RESET}}$ pin = L	Reset Release[Note]	Debug Reset	CVM Reset
GPIO		—	Operate	Hi-Z	Hi-Z	Hi-Z	Hi-Z
P0_3 to P0_9	GPIO (/AUDR)	OPAUDR = 1	Operate	Hi-Z	Hi-Z	Hi-Z	Hi-Z
	$\overline{\text{AUDRST}}$	OPAUDR = 0	Operate	Hi-Z	Hi-Z	Hi-Z	Hi-Z
	AUDCK						
	$\overline{\text{AUDSYNC}}$						
	AUDATA[3:0]						
JP0_x	JP0_0 to JP0_3, JP0_5	OPJTAG = 00	N.A.			N.A.	N.A.
	DCUTDI	OPJTAG = 11	Operate (If JTAG is selected based on OPJTAG setting.)			Operate	Operate
	DCUTDO						
	DCUTCK						
	DCUTMS						
	$\overline{\text{DCUTRDY}}$						
	LPDI	OPJTAG = 01	Operate (If LPD4P is selected based on OPJTAG setting.)				
	LPDO						
	LPDCLK						
	JP0_3		Operate	Hi-Z	Hi-Z	Hi-Z	Hi-Z
	LPDCLKOUT		Operate (if LPD4P is selected based on OPJTAG setting)			Operate	Operate
	LPDIO	OPJTAG = 10	Operate (If LPD1P is selected based on OPJTAG setting.)			Operate	Operate
	JP0_1 to JP0_3, JP0_5		Operate	Hi-Z	Hi-Z	Hi-Z	Hi-Z
P0_13	GPIO (EVTI)	OPEVTI = 1	Operate	Hi-Z	Hi-Z	Hi-Z	Hi-Z
	$\overline{\text{EVTI}}$	OPEVTI = 0	Operate (If $\overline{\text{EVTI}}$ is selected based on OPEVTI setting.)			Operate	Operate
$\overline{\text{RESET}}$		—	H (PD)	L (PD)	H (PD)	H (PD)	H (PD)
$\overline{\text{ERROROUT}}$		—	Operate	Hi-Z	L	L	Hi-Z
P0_10	$\overline{\text{RESETOUT}}$ (/GPIO)	$\overline{\text{OPEVTO}}$ = 1 or $\overline{\text{DCUTRST}}$ = L	H*1 (Set to "High" by user program)	L	L	L	L
	$\overline{\text{EVTO}}$	OPEVTO = 0 and $\overline{\text{DCUTRST}}$ = H	Operate (If $\overline{\text{EVTO}}$ is selected based on OPJTAG setting.)			Operate	Operate
$\overline{\text{CVMOUT}}$		—	H	H	H	L	L
FLMD0*2		—	L (PD)	L (PD)	L (PD)	L (PD)	L (PD)
P3_14	FLMD1(/GPIO)	—	Operate*1	Hi-Z	Hi-Z	Hi-Z	Hi-Z
X1/X2		—	Run	Run	Run	Run	Run
ANI		—	Operate	Hi-Z	Hi-Z	Hi-Z	Hi-Z
$\overline{\text{DCUTRST}}$		—	H (PD)	H (PD)	H (PD)	H (PD)	H (PD)

Note: The states listed in the table are those following release from a pin reset, debug reset, ECM reset, SW reset, or CVM reset.

Note 1. This pin functions as a port pin.
Note 2. Drive FLMD0 low.

Table 2.68 Pin State in Serial Programming Mode

Port	Pin Category	OPAUDR/ OPJTAG/ OPEVTI/ OPEVTO	Power OFF	$\overline{\text{DCUTRST}}$ = L		
				$\overline{\text{RESET}}$ pin = L	Reset Release[Note]	RUN (Serial Programming Mode)
				Power ON		
GPIO		—	—	Hi-Z	Hi-Z	Operate
P0_3 to P0_9	GPIO (/AUDR)	OPAUDR = x	—	Hi-Z	Hi-Z	Operate as GPIO (not depend on OPAUDR setting)
JP0_x	JTAG PORT (FLSCI3RXD (FPDR)/ FLSCI3TXD (FPDT)/ FLSCI3SCKI (FPCK))	OPJTAG = xx	—	Hi-Z	Hi-Z	Operate
P0_13	GPIO ($\overline{\text{EVTI}}$)	OPEVTI = x	—	Hi-Z	Hi-Z	Operate as GPIO (not depend on OPEVTI setting)
$\overline{\text{RESET}}$		—	—	L (PD)	H (PD)	H (PD)
$\overline{\text{ERROROUT}}$		—	—	Hi-Z	L	Operate
P0_10	$\overline{\text{RESETOUT}}$(/GPIO)	OPEVTO = x or $\overline{\text{DCUTRST}}$ = x	—	L	L	L
$\overline{\text{CVMOUT}}$		—	—	L → H	H (masked) *1	H (masked) *1
FLMD0*2		—	—	H (PD)	H (PD)	H (PD)
P3_14	FLMD1(/GPIO)*2	—	—	L	L	L
X1/X2		—	—	Stop→ Run	Run	Run
ANI		—	—	Hi-Z	Hi-Z	Operate
$\overline{\text{DCUTRST}}$		—	—	L (PD)	L (PD)	L (PD)

Note 1. $\overline{\text{CVMOUT}}$ is masked and outputs high level in serial programming mode.
Note 2. Drive the FLMD0 pin to the high level and the FLMD1 pin to the low level.

Section 3 CPU System

3.1 Overview

3.1.1 Block Configuration

Figure 3.1 shows the block configuration diagram.

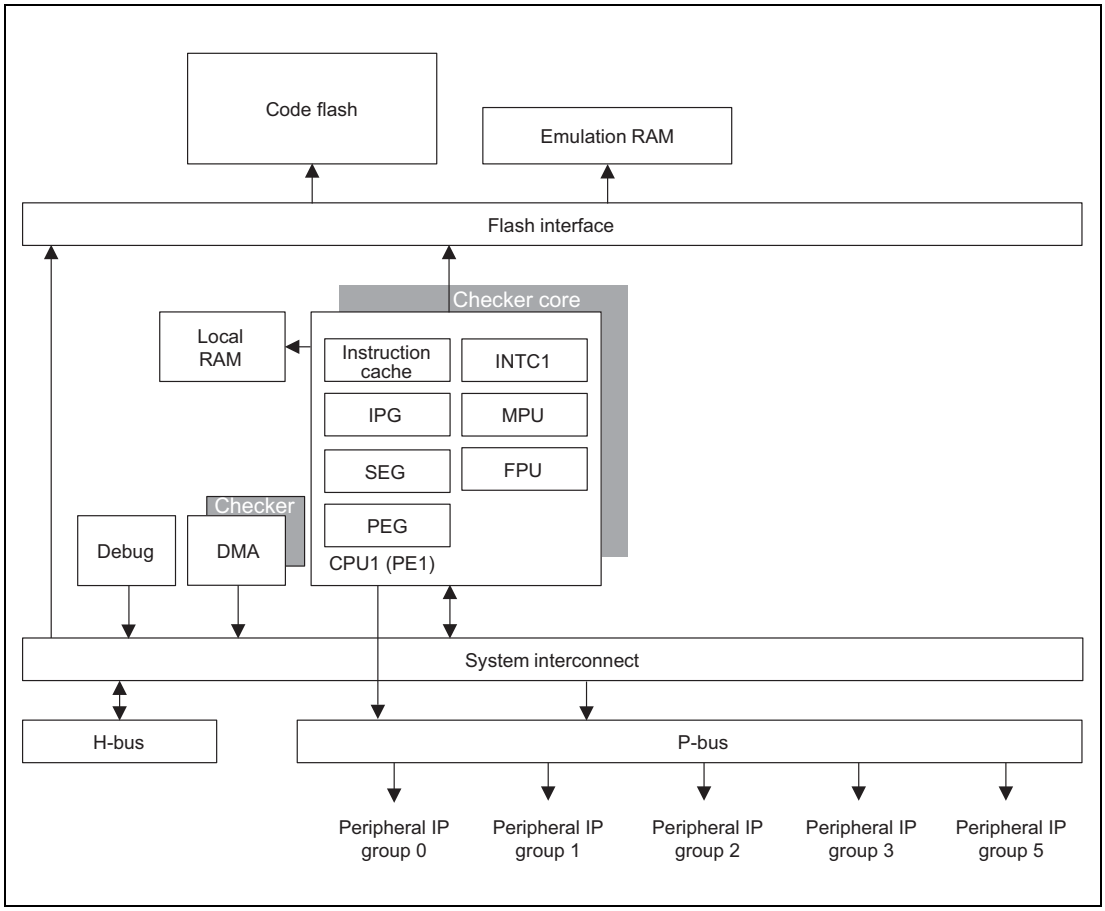

Figure 3.1 Block Configuration Diagram

CPU1 (PE1)

The RH850 G3M core is included as a main CPU. CPU1 also includes the checker core for safety assurance.

Local RAM

A high-speed accessible local RAM is included.

Code Flash

A mass code flash is included for program storage. CPU1 and the code flash are connected with each other via the code flash interface.

Emulation RAM

It is a RAM to emulate the code flash. The programs can be replaced by controlling from an external tool without rewriting the code flash.

Data Flash

It is a flash memory being rewritable by the CPU.

P-Bus and H-Bus

The P-bus and H-bus connect the peripheral IPs. The P-bus is divided into five, peripheral IP groups 0 to 3, and 5.

INTC1, INTC2

The interrupt controller consists of INTC1 and INTC2. INTC1 has a redundant configuration with the checker core.

DMA

Two DMA transfer modules, DMAC and DTS, are included. The DMA is provided with a checker for safety.

Slave Guard

The slave guard is a system to prevent unauthorized access from the specific bus master, consisting of the following guard structures.

(1) PE Guard (PEG)

The PE guard is a system to prevent unauthorized access to the resources in the PE from the external master. Access from the PE itself is only enabled but all other accesses are disabled after release from the reset state.

(2) Peripheral Guard (PBG)

The peripheral guard is a system to prevent unauthorized access to peripheral devices from the external master. Peripheral devices are in the unprotected state (accessible from all bus masters) after release from the reset state.

3.2 CPU

3.2.1 Core Functions

3.2.1.1 Features

Table 3.1 lists features of the RH850G3M core.

Table 3.1 Features of the RH850G3M Core

Item	Feature
CPU	• Advanced 32-bit architecture for embedded control • 32-bit internal data bus • Thirty-two 32-bit general registers • RISC-type instruction sets – Long-/short-format load/store instructions – Three-operand instructions – Instruction sets based on C language • CPU operating modes – User mode and supervisor mode • Address space: 4-Gbyte linear address space for both data and instructions • Instructions: A snooze instruction (SNOOZE) is included for temporary suspension by switching the CPU clock signal (CLK_CPU) off for 32 clock cycles.
Coprocessor	• A floating-point operation coprocessor (FPU) mounted – Supports single precision (32 bits) and double precision (64 bits). – Supports data types and exceptions conforming to IEEE754. – Rounding mode: Neighborhood, 0 direction, +∞ direction, and -∞ direction – Handling denormalized numbers: Rounding down to 0 or exception notification to conform to IEEE754
Exception/ Interrupt	• 16 interrupt priority levels settable for each channel • Vector selection method selectable according to performance request or memory usage – Direct branching exception vectors – Indirect branching exception vectors referring to the address table • Supports the high-speed save/restore processing of the context by the dedicated instructions (PUSHSP and POPSP) at the generation of an interrupt
Memory management	• Memory protection function (MPU): 12 areas settable
Cache	• Instruction cache

3.2.1.2 Register Set

The program registers and system registers which are included in this CPU are described in this section.

(1) Program Registers

Program registers include the general-purpose registers (r0 to r31) and program counter (PC). Though general-purpose register r0 always retains 0, the values of r1 to r31 after reset are undefined.

Table 3.2 List of Program Registers

Program Register	Name	Function	Description
General-purpose registers	r0	Zero register	Always retains “0”
	r1	Assembler reserved register	Used as working register for generating addresses
	r2	Register for address and data variables (used when the real-time OS used does not use this register)	
	r3	Stack pointer (SP)	Used for generating a stack frame when a function is called
	r4	Global pointer (GP)	Used for accessing a global variable in the data area
	r5	Text pointer (TP)	Used as a register that indicates the start of the text area (area where program code is placed)
	r6 to r29	Register for addresses and data variables	
	r30	Element pointer (EP)	Used as a base pointer for generating addresses when accessing memory
	r31	Link pointer (LP)	Used when the compiler calls a function
Program counter	PC	Retains instruction addresses during execution of programs	

NOTE

For further descriptions of r1, r3 to r5, and r31 used for an assembler and/or C compiler, see the specification of each software development environment.

(a) General — Purpose Registers

A total of 32 general-purpose registers (r0 to r31) are provided. All of these registers can be used for either data variables or address variables.

Of the general-purpose registers, r0 to r5, r30, and r31 are assumed to be used for special purposes in software development environments, so it is necessary to note the following when using them.

1. r0, r3, and r30

   These registers are implicitly used by instructions.

   r0 is a register that always retains “0”. It is used for operations that use 0 and addressing with base address being 0.

   r3 is implicitly used by the PREPARE, DISPOSE, PUSHSP, and POPSP instructions.

   r30 is used as a base pointer when the SLD instruction or SST instruction accesses memory.

2. r1, r4, r5, and r31

   These registers are implicitly used by the assembler and C compiler.

   When using these registers, register contents must first be saved so they are not lost and can be restored after the registers are used.

3. r2

   This register might be used by a real-time OS in some cases. If the real-time OS that is being used is not using r2, r2 can be used as a register for address variables or data variables.

(b) PC — Program Counter

The PC retains the address of the instruction being executed.

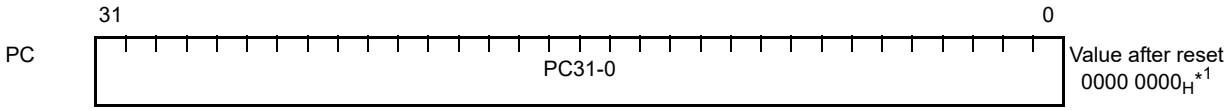

Table 3.3 PC Register Contents

Bit Position	Bit Name	Function	R/W	Value After Reset
31 to 1	PC31-1	These bits indicate the address of the instruction being executed.	R/W	*1
0	PC0	This bit is fixed to 0, and branching to an odd number address is disabled.	R/W	0

Note 1. This value varies depending on whether the variable reset vector function is used. For details, see **Section Section 35, Flash Memory**.

(2) Basic System Registers

The basic system registers are used to control CPU status and to retain exception information.

System registers are read from or written to by using the LDSR or STSR instructions and specifying the system register number, which is made up of a register number and selection ID.

Table 3.4 Basic System Registers

Register No. (reg.ID, sel.ID)	Symbol	Function	Access Permission
SR0, 0	EIPC	Status save registers when acknowledging EI level exception	SV
SR1, 0	EIPSW	Status save registers when acknowledging EI level exception	SV
SR2, 0	FEPC	Status save registers when acknowledging FE level exception	SV
SR3, 0	FEPSW	Status save registers when acknowledging FE level exception	SV
SR5, 0	PSW	Program status word	*1
SR6, 0	FPSR	Refer to **(4) FPU Function Registers**.	CU0 and SV
SR7, 0	FPEPC	Refer to **(4) FPU Function Registers**.	CU0 and SV
SR8, 0	FPST	Refer to **(4) FPU Function Registers**.	CU0
SR9, 0	FPCC	Refer to **(4) FPU Function Registers**.	CU0
SR10, 0	FPCFG	Refer to **(4) FPU Function Registers**.	CU0
SR11, 0	FPEC	Refer to **(4) FPU Function Registers**.	CU0 and SV
SR13, 0	EIIC	EI level exception cause	SV
SR14, 0	FEIC	FE level exception cause	SV
SR16, 0	CTPC	CALLT execution status save register	UM
SR17, 0	CTPSW	CALLT execution status save register	UM
SR20, 0	CTBP	CALLT base pointer	UM
SR28, 0	EIWR	EI level exception working register	SV
SR29, 0	FEWR	FE level exception working register	SV
SR31, 0	(BSEL)	(Reserved for backwards compatibility with the V850E2 series)*2	SV
SR0, 1	MCFG0	Machine configuration	SV
SR2, 1	RBASE	Reset vector base address	SV
SR3, 1	EBASE	Exception handler vector address	SV
SR4, 1	INTBP	Base address of the interrupt handler table	SV
SR5, 1	MCTL	CPU control	SV
SR6, 1	PID	Processor ID	SV
SR11, 1	SCCFG	SYSCALL operation setting	SV
SR12, 1	SCBP	SYSCALL base pointer	SV
SR0, 2	HTCFG0	Thread configuration	SV
SR6, 2	MEA	Memory error address	SV
SR7, 2	ASID	Address space ID	SV
SR8, 2	MEI	Memory error information	SV

Note 1. The access permission differs depending on the bit. For details, refer to the PSW register described in **(2) Basic System Registers**.

Note 2. This register is reserved for backwards compatibility with the V850E2 series.

(a) EIPC — Status Save Register when Acknowledging EI Level Exception

When an EI level exception is acknowledged, the address of the instruction that was being executed when the EI level exception occurred, or of the next instruction, is saved to the EIPC register (see *"Types of Exceptions"* in *the RH850G3M User's Manual: Software*).

Because there is only one pair of EI level exception status save registers, when processing multiple exceptions, the contents of these registers must be saved by a program.

Be sure to set an even-numbered address to the EIPC register. An odd-numbered address must not be specified.

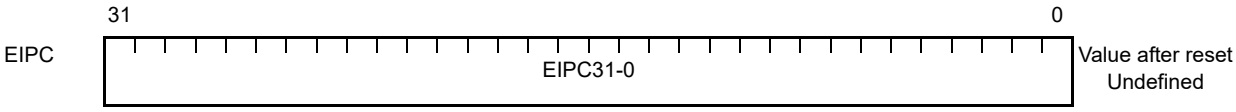

Table 3.5 EIPC Register Contents

Bit Position	Bit Name	Function	R/W	Value After Reset
31 to 1	EIPC31-1	These bits indicate the PC saved when an EI level exception is acknowledged.	R/W	Undefined
0	EIPC0	This bit indicates the PC saved when an EI level exception is acknowledged. Always set this bit to 0. Even if it is set to 1, the value transferred to the PC when the EIRET instruction is executed is 0.	R/W	Undefined

(b) EIPSW — Status Save Register when Acknowledging EI Level Exception

When an EI level exception is acknowledged, the current PSW setting is saved to the EIPSW register.

Because there is only one pair of EI level exception status save registers, when processing multiple exceptions, the contents of these registers must be saved by a program.

CAUTION

Bits 11 to 9 are related to the debugging function and therefore cannot normally be changed.

	31	30	29									19	18		16	15	14		12	11		9	8	7	6	5	4	3	2	1	0	
EIPSW	0	UM	0	0	0	0	0	0	0	0	0	0	0	CU2-0		EBV	0	0	0	Debug			0	NP	EP	ID	SAT	CY	OV	S	Z	Value after reset 0000 0020_H

Table 3.6 EIPSW Register Contents

Bit Position	Bit Name	Function	R/W	Value After Reset
31	Reserved	When read, the value after reset is read. When writing, write the value after reset.	R	0
30	UM	This bit stores the PSW.UM bit setting when an EI level exception is acknowledged.	R/W	0
29 to 19	Reserved	When read, the value after reset is read. When writing, write the value after reset.	R	0
18 to 16	CU2-0	These bits store the PSW.CU 2 to 0 field setting when an EI level exception is acknowledged.(CU2 and CU1 are reserved for future expansion. Be sure to clear to 0.)	R/W	0
15	EBV	This bit stores the PSW.EBV bit setting when an EI level exception is acknowledged.	R/W	0
14 to 12	Reserved	When read, the value after reset is read. When writing, write the value after reset.	R	0
11 to 9	Debug	These bits save the PSW.Debug field when an EI level exception is acknowledged.	R/W	0
8	Reserved	When read, the value after reset is read. When writing, write the value after reset.	R	0
7	NP	This bit stores the PSW.NP bit setting when an EI level exception is acknowledged.	R/W	0
6	EP	This bit stores the PSW.EP bit setting when an EI level exception is acknowledged.	R/W	0
5	ID	This bit stores the PSW.ID bit setting when an EI level exception is acknowledged.	R/W	1
4	SAT	This bit stores the PSW.SAT bit setting when an EI level exception is acknowledged.	R/W	0
3	CY	This bit stores the PSW.CY bit setting when an EI level exception is acknowledged.	R/W	0
2	OV	This bit stores the PSW.OV bit setting when an EI level exception is acknowledged.	R/W	0
1	S	This bit stores the PSW.S bit setting when an EI level exception is acknowledged.	R/W	0
0	Z	This bit stores the PSW.Z bit setting when an EI level exception is acknowledged.	R/W	0

(c) FEPC — Status Save Register when Acknowledging FE Level Exception

When an FE level exception is acknowledged, the address of the instruction that was being executed when the FE level exception occurred, or of the next instruction, is saved to the FEPC register (see "*Types of Exceptions*" in *the RH850G3M User's Manual: Software*).

Because there is only one pair of FE level exception status save registers, when processing multiple exceptions, the contents of these registers must be saved by a program.

Be sure to set an even-numbered address to the FEPC register. An odd-numbered address must not be specified.

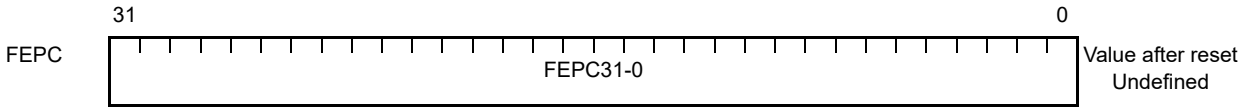

Table 3.7 FEPC Register Contents

Bit Position	Bit Name	Function	R/W	Value After Reset
31 to 1	FEPC31-1	These bits indicate the PC saved when an FE level exception is acknowledged.	R/W	Undefined
0	FEPC0	This bit indicates the PC saved when an FE level exception is acknowledged. Always set this bit to 0. Even if it is set to 1, the value transferred to the PC when the FERET instruction is executed is 0.	R/W	Undefined

(d) FEPSW — Status Save Register when Acknowledging FE Level Exception

When an FE level exception is acknowledged, the current PSW setting is saved to the FEPSW register.

Because there is only one pair of FE level exception status save registers, when processing multiple exceptions, the contents of these registers must be saved by a program.

CAUTION

Bits 11 to 9 are used for debugging, and cannot be modified normally.

	31	30	29									19	18		16	15	14			12	11		9	8	7	6	5	4	3	2	1	0	
FEPSW	0	UM	0	0	0	0	0	0	0	0	0	0	CU2-0			EBV	0	0	0	Debug				0	NP	EP	ID	SAT	CY	OV	S	Z	Value after reset 0000 0020_H

Table 3.8 FEPSW Register Contents

Bit Position	Bit Name	Function	R/W	Value After Reset
31	Reserved	When read, the value after reset is read. When writing, write the value after reset.	R	0
30	UM	This bit stores the PSW.UM bit setting when an FE level exception is acknowledged.	R/W	0
29 to 19	Reserved	When read, the value after reset is read. When writing, write the value after reset.	R	0
18 to 16	CU2-0	These bits store the PSW.CU 2 to 0 field setting when an FE level exception is acknowledged. (CU2 and CU1 are reserved for future expansion. Be sure to clear to 0.)	R/W	0
15	EBV	This bit stores the PSW.EBV bit setting when an FE level exception is acknowledged.	R/W	0
14 to 12	Reserved	When read, the value after reset is read. When writing, write the value after reset.	R	0
11 to 9	Debug	These bits save the PSW.Debug field when an FE level exception is acknowledged.	R/W	0
8	Reserved	When read, the value after reset is read. When writing, write the value after reset.	R	0
7	NP	This bit stores the PSW.NP bit setting when an FE level exception is acknowledged.	R/W	0
6	EP	This bit stores the PSW.EP bit setting when an FE level exception is acknowledged.	R/W	0
5	ID	This bit stores the PSW.ID bit setting when an FE level exception is acknowledged.	R/W	1
4	SAT	This bit stores the PSW.SAT bit setting when an FE level exception is acknowledged.	R/W	0
3	CY	This bit stores the PSW.CY bit setting when an FE level exception is acknowledged.	R/W	0
2	OV	This bit stores the PSW.OV bit setting when an FE level exception is acknowledged.	R/W	0
1	S	This bit stores the PSW.S bit setting when an FE level exception is acknowledged.	R/W	0
0	Z	This bit stores the PSW.Z bit setting when an FE level exception is acknowledged.	R/W	0

(e) PSW — Program Status Word

PSW (program status word) is a set of flags that indicate the program status (instruction execution result) and bits that indicate the operation status of the CPU (flags are bits in the PSW that are referenced by a condition instruction (Bcond, CMOV, etc.)).

CAUTIONS

1. When the LDSR instruction is used to change the contents of bits 7 to 0 in this register, the changed contents become valid from the instruction following the LDSR instruction.
2. The access permission for the PSW register differs depending on the bit. All bits can be read, but some bits can only be written under certain conditions. See **Table 3.9, Access Permission for PSW Register** for the access permission for each bit.

Table 3.9 Access Permission for PSW Register

Bit		Access Permission When Reading	Access Permission When Writing
30	UM	UM	SV*1
18 to 16	CU2-0		SV*1
15	EBV		SV*1
11 to 9	Debug		Special*1
7	NP		SV*1
6	EP		SV*1
5	ID		SV*1
4	SAT		UM
3	CY		UM
2	OV		UM
1	S		UM
0	Z		UM

Note 1. The access permission for the whole PSW register is UM, so the PIE exception does not occur even if the register is written by using an LDSR instruction when PSW.UM is 1. In this case, writing is ignored.

PSW

31	30	29										19	18		16	15	14		12	11		9	8	7	6	5	4	3	2	1	0
0	UM	0	0	0	0	0	0	0	0	0	0	0	CU2-0			EBV	0	0	0	Debug			0	NP	EP	ID	SAT	CY	OV	S	Z

Value after reset $0000\ 0020_H$

Table 3.10 PSW Register Contents (1/2)

Bit Position	Bit Name	Function	R/W	Value After Reset
31	Reserved	When read, the value after reset is read. When writing, write the value after reset.	R	0
30	UM	This bit indicates that the CPU is in user mode (UM mode). 0: Supervisor mode 1: User mode	R/W	0
29 to 19	Reserved	When read, the value after reset is read. When writing, write the value after reset.	R	0
18 to 16	CU2-CU0	These bits indicate the coprocessor use permissions. When the bit corresponding to the coprocessor is 0, a coprocessor unusable exception occurs if an instruction for the coprocessor is executed or a coprocessor resource (system register) is accessed. CU2 bit 18: (Reserved for future expansion. Be sure to clear to 0.) CU1 bit 17: (Reserved for future expansion. Be sure to clear to 0.) CU0 bit 16: FPU	R/W	000

Table 3.10 PSW Register Contents (2/2)

Bit Position	Bit Name	Function	R/W	Value After Reset
15	EBV	This bit indicates the reset vector and exception vector operation. See the descriptions of the RBASE register and the EBASE register.	R/W	0
14 to 12	Reserved	When read, the value after reset is read. When writing, write the value after reset.	R	0
11 to 9	Debug	These bits are used in the debugging functions of development tools. In normal operation, clear these bits to 0.	—	0
8	Reserved	When read, the value after reset is read. When writing, write the value after reset.	R	0
7	NP	This bit disables the acknowledgement of FE-level exceptions. When an FE level exception is acknowledged, this bit is set to 1, disabling the acknowledgement of EI-level and FE-level exceptions. For exceptions that are disabled from being acknowledged due to the NP bit, see "*List of Exception Sources*" in *the RH850G3M User's Manual: Software*. 0: Acknowledgement of an FE level exception is enabled. 1: Acknowledgement of an FE level exception is disabled.	R/W	0
6	EP	This bit indicates that an exception other than an interrupt is being serviced. It is set to 1 when the corresponding exception occurs. This bit does not affect acknowledging an exception request even when it is set to 1. 0: An interrupt is being serviced. 1: An exception other than an interrupt is being serviced.	R/W	0
5	ID	This bit disables the acknowledgement of EI-level exceptions. It is set to 1 when an EI or FE level exception is acknowledged, disabling the acknowledgement of EI level exceptions. See "*List of Exception Sources*" in *the RH850G3M User's Manual: Software* for exceptions that are disabled from being acknowledged due to the DI bit. This bit is also used to disable the acknowledgement of EI level exceptions in critical sections of ordinary programs and while interrupts are being serviced. It is set to 1 when the DI instruction is executed, and cleared to 0 when the EI instruction is executed. Changes in the ID bit due to an EI or DI instruction will be effective from the next instruction. 0: Acknowledgement of an EI level exception is enabled. 1: Acknowledgement of an EI level exception is disabled.	R/W	1
4	SAT*[1]	This bit indicates that the operation result is saturated because the result of a saturated operation instruction operation has overflowed. This is a cumulative flag, so when the operation result of the saturated operation instruction becomes saturated, this bit is set to 1, but it is not cleared to 0 when the operation result for a subsequent instruction is not saturated. This bit is cleared to 0 by the LDSR instruction. This bit is neither set to 1 nor cleared to 0 when an arithmetic operation instruction is executed. 0: Not saturated 1: Saturated	R/W	0
3	CY	This bit indicates whether a carry or borrow has occurred in the operation result. 0: Carry and borrow have not occurred. 1: Carry or borrow has occurred.	R/W	0
2	OV*[1]	This bit indicates whether or not an overflow has occurred during an operation. 0: Overflow has not occurred. 1: Overflow has occurred.	R/W	0
1	S*[1]	This bit indicates whether or not the result of an operation is negative. 0: Result of operation is positive or 0. 1: Result of operation is negative	R/W	0
0	Z	This bit indicates whether or not the result of an operation is 0. 0: Result of operation is not 0. 1: Result of operation is 0.	R/W	0

Note 1. The operation result of the saturation processing is determined in accordance with the contents of the OV flag and S flag during a saturated operation. When only the OV flag is set to 1 during a saturated operation, the SAT flag is set to 1.

Operation result status	Flag status			Operation result after saturation processing
	SAT	OV	S	
Exceeded positive maximum value	1	1	0	7FFF $FFFF_H$
Exceeded negative maximum value	1	1	1	8000 0000_H
Positive (maximum value not exceeded)	Value prior to operation is retained.	0	0	Operation result itself
Negative (maximum value not exceeded)			1	

(f) EIIC — EI Level Exception Source Register

The EIIC register retains the source of any EI level exception that occurs. The value retained in this register is an exception code corresponding to a specific exception source.

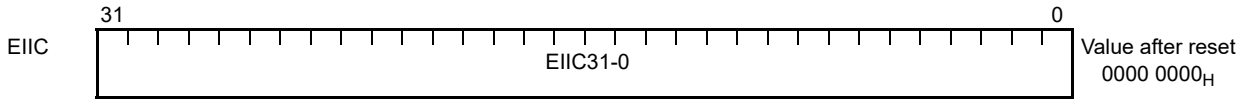

Table 3.11 EIIC Register Contents

Bit Position	Bit Name	Function	R/W	Value After Reset
31 to 0	EIIC31-0	These bits store the exception source code when an EI level exception occurs. For the exception source code to be stored, see **Table 6.12, Interrupt Exception Handler and Priority**, and "*List of Exception Sources*" in *the RH850G3M User's Manual: Software*. The EIIC31-16 field stores detailed exception source codes defined individually for each exception. If there is no particular definition, these bits are set to 0.	R/W	0

(g) FEIC — FE Level Exception Source Register

The FEIC register retains the source of any FE level exception that occurs. The value retained in this register is an exception code corresponding to a specific exception source.

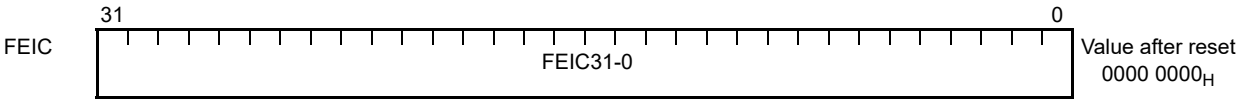

Table 3.12 FEIC Register Contents

Bit Position	Bit Name	Function	R/W	Value After Reset
31 to 0	FEIC31-0	These bits store the exception source code when an FE level exception occurs. For the exception source code to be stored, see **Table 6.12, Interrupt Exception Handler and Priority**, and "*List of Exception Sources*" in *the RH850G3M User's Manual: Software*. The FEIC31-16 field stores detailed exception source codes defined individually for each exception. If there is no particular definition, these bits are set to 0.	R/W	0

(h) CTPC — Status Save Register when Executing CALLT Register

When a CALLT instruction is executed, the address of the next instruction after the CALLT instruction is saved to CTPC. Be sure to set an even-numbered address to the CTPC register. An odd-numbered address must not be specified.

	31	0	
CTPC	CTPC31-0		Value after reset Undefined

Table 3.13 CTPC Register Contents

Bit Position	Bit Name	Function	R/W	Value After Reset
31 to 1	CTPC31-1	These bits indicate the PC of the instruction after the CALLT instruction.	R/W	Undefined
0	CTPC0	This bit indicates the PC of the instruction after the CALLT instruction. Always set this bit to 0. Even if it is set to 1, the value transferred to the PC when the CTRET instruction is executed is 0.	R/W	Undefined

(i) CTPSW — Status Save Register when Executing CALLT Register

When a CALLT instruction is executed, some of the PSW (program status word) settings are saved to CTPSW.

	31																											5	4	3	2	1	0	
CTPSW	0	0	0	0	0	0	0	0	0	0	0	0	0	0	0	0	0	0	0	0	0	0	0	0	0	0	0	0	SAT	CY	OV	S	Z	Value after reset $0000\ 0000_H$

Table 3.14 CTPSW Register Contents

Bit Position	Bit Name	Function	R/W	Value After Reset
31 to 5	Reserved	When read, the value after reset is read. When writing, write the value after reset.	R	0
4	SAT	This bit stores the PSW.SAT bit setting when the CALLT instruction is executed.	R/W	0
3	CY	This bit stores the PSW.CY bit setting when the CALLT instruction is executed.	R/W	0
2	OV	This bit stores the PSW.OV bit setting when the CALLT instruction is executed.	R/W	0
1	S	This bit stores the PSW.S bit setting when the CALLT instruction is executed.	R/W	0
0	Z	This bit stores the PSW.Z bit setting when the CALLT instruction is executed.	R/W	0

(j) CTBP — CALLT Base Pointer Register

The CTBP register is used to specify table addresses of the CALLT instruction and generate target addresses.

Be sure to set the CTBP register to a half word address.

	31 … 0	
CTBP	CTBP31-0	Value after reset Undefined

Table 3.15 CTBP Register Contents

Bit Position	Bit Name	Function	R/W	Value After Reset
31 to 1	CTBP31-1	These bits indicate the base pointer address of the CALLT instruction. These bits indicate the first address in the table used by the CALLT instruction.	R/W	Undefined
0	CTBP0	These bits indicate the base pointer address of the CALLT instruction. These bits indicate the first address in the table used by the CALLT instruction. Always set this bit to 0.	R	0

(k) ASID — Address Space ID Register

This is the address space ID. This is used to identify the address space provided by the memory management function.

	31 … 10	9 … 0	
ASID	0 0 0 0 0 0 0 0 0 0 0 0 0 0 0 0 0 0 0 0 0 0	ASID	Value after reset Undefined

Table 3.16 ASID Register Contents

Bit Position	Bit Name	Function	R/W	Value After Reset
31 to 10	Reserved	When read, the value after reset is read. When writing, write the value after reset.	R	0
9 to 0	ASID	This is the address space ID.	R/W	Undefined

(l) EIWR — EI Level Exception Working Register

The EIWR register is used as a working register when an EI level exception has occurred.

	31 … 0	
EIWR	EIWR31-0	Value after reset Undefined

Table 3.17 EIWR Register Contents

Bit Position	Bit Name	Function	R/W	Value After Reset
31 to 0	EIWR31-0	These bits constitute a working register that can be used for any purpose during the processing of an EI level exception. Use this register for purposes such as storing the values of general-purpose registers.	R/W	Undefined

(m) FEWR — FE Level Exception Working Register

The FEWR register is used as a working register when an FE level exception has occurred.

	31 … 0	
FEWR	FEWR31-0	Value after reset Undefined

Table 3.18 FEWR Register Contents

Bit Position	Bit Name	Function	R/W	Value After Reset
31 to 0	FEWR31-0	These bits constitute a working register that can be used for any purpose during the processing of an FE level exception. Use this register for purposes such as storing the values of general-purpose registers.	R/W	Undefined

(n) HTCFG0 — Thread Configuration Register

	31													19 18	16 15	14															0	
HTCFG0	0	0	0	0	0	0	0	0	0	0	0	0	0	PEID		1	0	0	0	0	0	0	0	0	0	0	0	0	0	0	0	Value after reset *1

Table 3.19 HTCFG0 Register Contents

Bit Position	Bit Name	Function	R/W	Value After Reset
31 to 19	Reserved	When read, the value after reset is read.	R	0
18 to 16	PEID	These bits indicate the processor element number.	R	*1
15	Reserved	When read, the value after reset is read.	R	1
14 to 0	Reserved	When read, the value after reset is read.	R	0

Note 1. The value for CPU1 (PE1) in this device is 001_B.

(o) MEA — Memory Error Address Register

	31 … 0	
MEA	MEA	Value after reset Undefined

Table 3.20 MEA Register Contents

Bit Position	Bit Name	Function	R/W	Value After Reset
31 to 0	MEA	These bits store an address when a MAE (misaligning) or MPU violation occurs.	R/W	Undefined

(p) MEI — Memory Error Information Register

This register is used to store information about the instruction that caused the exception when a misaligned (MAE) or memory protection (MDP) exception occurs.

	31										21	20				16	15				11	10	9	8	7	6	5				1	0	
MEI	0	0	0	0	0	0	0	0	0	0	0	REG					0	0	0	0	0	DS		U	0	0	ITYPE				R W	Value after reset Undefined

Table 3.21 MEI Register Contents

Bit Position	Bit Name	Function	R/W	Value After Reset
31 to 21	Reserved	When read, the value after reset is read. When writing, write the value after reset.	R	0
20 to 16	REG4-0	These bits indicate the number of the source or destination register accessed by the instruction that caused the exception. For details, see **Table 3.22, Instructions Causing Exceptions and Values of MEI Register**.	R/W	Undefined
15 to 11	Reserved	When read, the value after reset is read. When writing, write the value after reset.	R	0
10, 9	DS	These bits indicate the type of data handled by the instruction that caused the exception.*1 0: Byte (8 bits) 1: Half word (16 bits) 2: Word (32 bits) 3: Double-word (64 bits) For details, see **Table 3.22, Instructions Causing Exceptions and Values of MEI Register**.	R/W	Undefined
8	U	These bits indicate the sign extension method of the instruction that caused the exception. 0: Signed 1: Unsigned For details, see **Table 3.22, Instructions Causing Exceptions and Values of MEI Register**.	R/W	Undefined
7, 6	Reserved	When read, the value after reset is read. When writing, write the value after reset.	R	0
5 to 1	ITYPE4-0	These bits indicate the instruction that caused the exception. For details, see **Table 3.22, Instructions Causing Exceptions and Values of MEI Register**.	R/W	Undefined
0	RW	This bit indicates whether the operation of the instruction that caused the exception was read (Load-memory) or write (Store-memory) 0: Read (Load-memory) 1: Write (Store-memory) For details, see **Table 3.22, Instructions Causing Exceptions and Values of MEI Register**.	R/W	Undefined

Note 1. Even if the data is divided and access is made several times due to the specifications of the hardware, the original data type indicated by the instruction is stored.

Table 3.22 Instructions Causing Exceptions and Values of MEI Register (1/2)

Instruction	REG	DS	U	RW	ITYPE
SLD.B	dst	0 (Byte)	0 (Signed)	0 (Read)	00000_B
SLD.BU	dst	0 (Byte)	1 (Unsigned)	0 (Read)	00000_B
SLD.H	dst	1 (Half-word)	0 (Signed)	0 (Read)	00000_B
SLD.HU	dst	1 (Half-word)	1 (Unsigned)	0 (Read)	00000_B
SLD.W	dst	2 (Word)	0 (Signed)	0 (Read)	00000_B
SST.B	src	0 (Byte)	0 (Signed)	1 (Write)	00000_B
SST.H	src	1 (Half-word)	0 (Signed)	1 (Write)	00000_B

Table 3.22 Instructions Causing Exceptions and Values of MEI Register (2/2)

Instruction	REG	DS	U	RW	ITYPE
SST.W	src	2 (Word)	0 (Signed)	1 (Write)	00000_B
LD.B (disp16)	dst	0 (Byte)	0 (Signed)	0 (Read)	00001_B
LD.BU (disp16)	dst	0 (Byte)	1 (Unsigned)	0 (Read)	00001_B
LD.H (disp16)	dst	1 (Half-word)	0 (Signed)	0 (Read)	00001_B
LD.HU (disp16)	dst	1 (Half-word)	1 (Unsigned)	0 (Read)	00001_B
LD.W (disp16)	dst	2 (Word)	0 (Signed)	0 (Read)	00001_B
ST.B (disp16)	src	0 (Byte)	0 (Signed)	1 (Write)	00001_B
ST.H (disp16)	src	1 (Half-word)	0 (Signed)	1 (Write)	00001_B
ST.W (disp16)	src	2 (Word)	0 (Signed)	1 (Write)	00001_B
LD.B (disp23)	dst	0 (Byte)	0 (Signed)	0 (Read)	00010_B
LD.BU (disp23)	dst	0 (Byte)	1 (Unsigned)	0 (Read)	00010_B
LD.H (disp23)	dst	1 (Half-word)	0 (Signed)	0 (Read)	00010_B
LD.HU (disp23)	dst	1 (Half-word)	1 (Unsigned)	0 (Read)	00010_B
LD.W (disp23)	dst	2 (Word)	0 (Signed)	0 (Read)	00010_B
ST.B (disp23)	src	0 (Byte)	0 (Signed)	1 (Write)	00010_B
ST.H (disp23)	src	1 (Half-word)	0 (Signed)	1 (Write)	00010_B
ST.W (disp23)	src	2 (Word)	0 (Signed)	1 (Write)	00010_B
LD.DW (disp23)	dst	3 (Double-word)	0 (Signed)	0 (Read)	00010_B
ST.DW (disp23)	src	3 (Double-word)	0 (Signed)	1 (Write)	00010_B
LDL.W	dst	2 (Word)	0 (Signed)	0 (Read)	00111_B
STC.W	src	2 (Word)	0 (Signed)	1 (Write)	00111_B
CAXI	dst	2 (Word)	1 (Unsigned)	0 (Read)*1	01000_B
SET1	—	0 (Byte)	1 (Unsigned)	0 (Read)*1	01001_B
CLR1	—	0 (Byte)	1 (Unsigned)	0 (Read)*1	01001_B
NOT1	—	0 (Byte)	1 (Unsigned)	0 (Read)*1	01001_B
TST1	—	0 (Byte)	1 (Unsigned)	0 (Read)	01001_B
PREPARE	—	2 (Word)	1 (Unsigned)	1 (Write)	01100_B
DISPOSE	—	2 (Word)	1 (Unsigned)	0 (Read)	01100_B
PUSHSP	—	2 (Word)	1 (Unsigned)	1 (Write)	01101_B
POPSP	—	2 (Word)	1 (Unsigned)	0 (Read)	01101_B
SWITCH	—	1 (Half-word)	0 (Signed)	0 (Read)	10000_B
CALLT	—	1 (Half-word)	1 (Unsigned)	0 (Read)	10001_B
SYSCALL	—	2 (Word)	1 (Unsigned)	0 (Read)	10010_B
CACHE	—	—	—	0/1*2	10100_B
Interrupt (table reference)*3	—	2 (Word)	1 (Unsigned)	0 (Read)	10101_B

Note 1. This exception occurs when the instruction executes a read access.

Note 2. It depends on actual operation.

Note 3. An exception occurs when the table reference interrupt vector is read.

NOTE

dst: Destination register number, src: Source register number

(q) RBASE — Reset Vector Base Address Register

This register indicates the reset vector address when there is a reset. If the PSW.EBV bit is 0, this vector address is also used as the exception vector address.

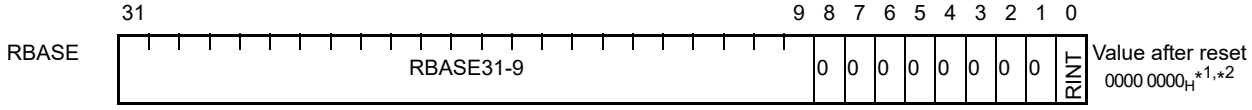

Table 3.23 RBASE Register Contents

Bit Position	Bit Name	Function	R/W	Value After Reset
31 to 9	RBASE31-9	These bits indicate the reset vector when there is a reset. When PSW.EBV = 0, this address is also used as the exception vector. The RBASE8 to 0 bits are implicitly set to 0.	R	*1
8 to 1	Reserved	When read, the value after reset is read. When writing, write the value after reset.	R	0
0	RINT	When the RINT bit is set, the offset address of the exception handler used during interrupt servicing is decremented. For details, see "*Direct Vector Method*" in *the RH850G3M User's Manual: Software*. This bit is valid when PSW.EBV = 0.	R	*2

Note 1. This value varies depending on whether the variable reset vector function is used. For details, see **Section Section 35, Flash Memory**.

Note 2. The value in this device is 0_B.

(r) EBASE — Exception Handler Vector Address Register

This register indicates the exception handler vector address. This register is valid when the PSW.EBV bit is 1.

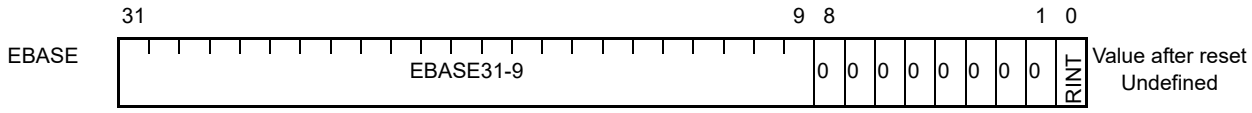

Table 3.24 EBASE Register Contents

Bit Position	Bit Name	Function	R/W	Value After Reset
31 to 9	EBASE31-9	The exception handler routine address is changed to the address resulting from adding the offset address of each exception to the base address specified for this register. The EBASE8 to EBASE1 bits are implicitly set to 0.	R/W	Undefined
8 to 1	Reserved	When read, the value after reset is read. When writing, write the value after reset.	R	0
0	RINT	When the RINT bit is set, the offset address of the exception handler used during interrupt servicing is decremented. For details, see "*Direct Vector Method*" in *the RH850G3M User's Manual: Software*.	R/W	Undefined

(s) INTBP — Base Address of the Interrupt Handler Table Register

This register indicates the base address of the address table when the table reference method is selected as the interrupt handler address selection method.

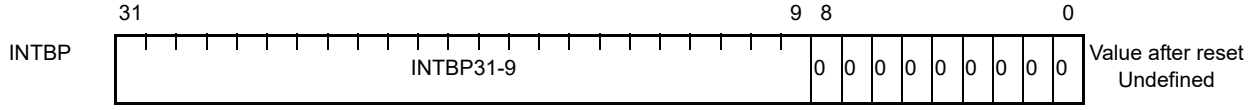

Table 3.25 INTBP Register Contents

Bit Position	Bit Name	Function	R/W	Value After Reset
31 to 9	INTBP31-9	These bits indicate the base pointer address for an interrupt prescribed in the expanded specifications. The value indicated by these bits is the first address in the table used to determine the exception handler when the interrupt prescribed by the expanded specifications (EIINT0 to EIINT511) is acknowledged. The INTBP8 to 0 bits are implicitly set to 0.	R/W	Undefined
8 to 0	Reserved	When read, the value after reset is read. When writing, write the value after reset.	R	0

(t) PID — Processor ID Register

The PID register retains a processor identifier that is unique to the CPU. The PID register is a read-only register.

CAUTION

The PID register indicates information used to identify the incorporated CPU core and CPU core configuration. Usage such that the software behavior varies dynamically according to the PID register information is not assumed.

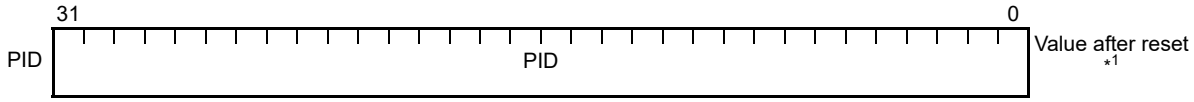

Table 3.26 PID Register Contents

Bit Position	Bit Name	Function	R/W	Value After Reset
31 to 24	PID	Architecture identifier This identifier indicates the architecture of the processor.	R	05_H
23 to 8		Function identifier This identifier indicates the functions of the processor. These bits indicate whether or not functions defined per bit are implemented (1: implemented, 0: not implemented). Bit 23-11 Reserved Bit 10 Double-precision floating-point operation function Bit 9 Single-precision floating-point operation function Bit 8 Memory protection function (MPU)	R	8007_H
7 to 0		Version identifier This identifier indicates the version of the processor.	R	03_H

Note 1. The value in this device is 0580 0703_H.

(u) SCCFG — SYSCALL Operation Setting Register

This register is used to specify operations related to the SYSCALL instruction. Be sure to set an appropriate value to this register before using the SYSCALL instruction.

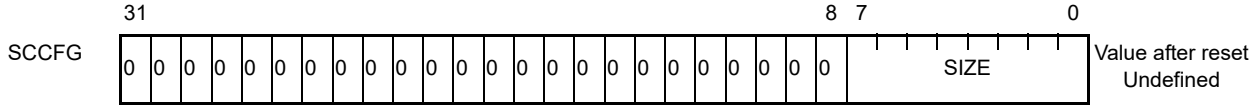

Table 3.27 SCCFG Register Contents

Bit Position	Bit Name	Function	R/W	Value After Reset
31 to 8	Reserved	When read, the value after reset is read. When writing, write the value after reset.	R	0
7 to 0	SIZE	These bits specify the maximum number of entries of a table that the SYSCALL instruction references. The maximum number of entries the SYSCALL instruction references is 1 if SIZE is 0, and 256 if SIZE is 255. By setting the maximum number of entries appropriately in accordance with the number of functions branched by the SYSCALL instruction, the memory area can be effectively used. If a vector exceeding the maximum number of entries is specified for the SYSCALL instruction, the first entry is selected. Place an error processing routine at the first entry.	R/W	Undefined

(v) SCBP — SYSCALL Base Pointer Register

The SCBP register is used to specify a table address of the SYSCALL instruction and generate a target address. Be sure to set an appropriate value to this register before using the SYSCALL instruction.

Be sure to set a word address to the SCBP register.

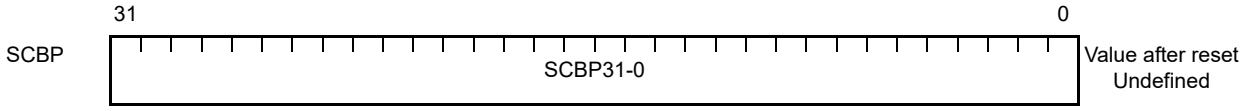

Table 3.28 SCBP Register Contents

Bit Position	Bit Name	Function	R/W	Value After Reset
31 to 2	SCBP31-2	These bits indicate the base pointer address of the SYSCALL instruction. These bits indicate the first address in the table used by the SYSCALL instruction.	R/W	Undefined
1, 0	SCBP1-0	These bits indicate the base pointer address of the SYSCALL instruction. These bits indicate the first address in the table used by the SYSCALL instruction. Always set these bits to 0.	R	0

(w) MCFG0 — Machine Configuration Register

This register indicates the CPU configuration.

	31							24 23							16 15											3	2	1	0	
MCFG0	0	0	0	0	0	0	0	0	SPID						0	0	0	0	0	0	0	0	0	0	0	0	1	0	0	Value after reset *1

Table 3.29 MCFG0 Register Contents

Bit Position	Bit Name	Function	R/W	Value After Reset
31 to 24	Reserved	When read, the value after reset is read. When writing, write the value after reset.	R	0
23 to 16	SPID	Bits 23 to 18: Not supported by this device. (Reserved for future expansion. Be sure to clear to 0.) Bits 17, 16: Indicate the system protection number	R/W	*1
15 to 3	Reserved	When read, the value after reset is read. When writing, write the value after reset.	R	0
2	Reserved	When read, the value after reset is read. When writing, write the value after reset.	R	1
1, 0	Reserved	When read, the value after reset is read. When writing, write the value after reset.	R	0

Note 1. The value for CPU1 (PE1) in this device is 01_B.

(x) MCTL — Machine Control Register

This register is used to control the CPU.

	31	30																												1	0	
MCTL	1	0	0	0	0	0	0	0	0	0	0	0	0	0	0	0	0	0	0	0	0	0	0	0	0	0	0	0	0	0	UIC	Value after reset $8000\ 0000_H$

Table 3.30 MCTL Register Contents

Bit Position	Bit Name	Function	R/W	Value After Reset
31	Reserved	When read, the value after reset is read. When writing, write the value after reset.	R	1
30 to 1	Reserved	When read, the value after reset is read. When writing, write the value after reset.	R	0
0	UIC	This bit is used to control the interrupt enable/disable operation in user mode. When this bit is set to 1, executing the EI/DI instruction become possible in user mode.	R/W	0

(3) Interrupt Function Registers

(a) Interrupt Function System Register

Reading from/writing to an interrupt function system register is performed by specifying the system register number, which consists of the register number and selection identifier, with the LDSR or STSR instructions.

Table 3.31 Interrupt Function System Registers

Register No. (reg.ID, sel.ID)	Symbol	Function	Access Permission
SR7, 1	FPIPR	FPI exception interrupt priority setting	SV
SR10, 2	ISPR	Priority of interrupt being serviced	SV
SR11, 2	PMR	Interrupt priority masking	SV
SR12, 2	ICSR	Interrupt control status	SV
SR13, 2	INTCFG	Interrupt function setting	SV

(1) FPIPR — FPI Exception Interrupt Priority Setting Register

This register specifies the FPI exception interrupt priority.

	31																											5	4			0	
FPIPR	0	0	0	0	0	0	0	0	0	0	0	0	0	0	0	0	0	0	0	0	0	0	0	0	0	0	0	0	FPIPR				Value after reset $0000\ 0000_H$

Table 3.32 FPIPR Register Contents

Bit Position	Bit Name	Function	R/W	Value After Reset
31 to 5	Reserved	When read, the value after reset is read. When writing, write the value after reset.	R	0
4 to 0	FPIPR	These bits specify the priority of the floating-point operation exception interrupt (FPI, indicating imprecision). Values from 0 to 16 should be used; the settings 17 and higher are prohibited. FPI exceptions are handled according to this interrupt priority, which is specified in advance. When generated at the same time as another interrupt with the same priority level, the FPI takes priority. **CAUTION** If these bits are set to 17 or higher values, handling is as if the setting were 16.	R/W	0

(2) ISPR — Priority of Interrupt being Serviced Register

This register holds the priority of the EIINTn interrupt being serviced. This priority value is then used to perform priority ceiling processing when multiple interrupts are generated.

	31																16 15															0	
ISPR	0	0	0	0	0	0	0	0	0	0	0	0	0	0	0	0	ISP15-0																Value after reset 0000 0000_H

Table 3.33 ISPR Register Contents

Bit Position	Bit Name	Function	R/W	Value After Reset
31 to 16	Reserved	When read, the value after reset is read. When writing, write the value after reset.	R	0
15 to 0	ISP15-0	These bits indicate the acknowledgment status of an EIINTn interrupt with a priority*1 that corresponds to the relevant bit position. 0: An interrupt request for an interrupt whose priority corresponds to the relevant bit position has not been acknowledged. 1: An interrupt request for an interrupt whose priority corresponds to the relevant position is being serviced by the CPU core. The bit positions correspond to the following priority levels: Bit — Priority 0 — Priority 0 (highest) 1 — Priority 1 : 14 — Priority 14 15 — Priority 15 When an interrupt request (EIINTn) is acknowledged, the bit corresponding to the acknowledged interrupt request is automatically set to 1. If PSW.EP is 0 when the EIRET instruction is executed, the bit with the highest priority among the ISP15-0 bits that are set (0 is the highest priority) is cleared to 0.*2 While a bit in this register is set to 1, lower priority interrupts (EIINTn) and FPI exception*3 are masked. Priority level judgment is therefore not performed when the system is determining whether to acknowledge an exception, meaning that exceptions will not be acknowledged. For details, see "*Direct Vector Method*" in *the RH850G3M User's Manual: Software*. When performing software-based priority control using the PMR register, be sure to clear this register by using the INTCFG.ISPC bit.	R*4	0

Note 1. See "*Interrupt Exception Priority and Priority Masking*" in *the RH850G3M User's Manual: Software* for the details.

Note 2. Interrupt acknowledgment and auto-updating of values when the EIRET instruction is executed are disabled by setting the INTCFG.ISPC bit to 1. We recommend auto-updating, so in normal cases, clear the INTCFG.ISPC bit to 0.

Note 3. Since FPI exceptions have the same level of priority as this interrupt (EIINTn), they are affected by interrupts in the same way as the ISPR. The priority of the FPI exception is set by the FPIPR register.

Note 4. This is R or R/W, depending on the setting of the INTCFG.ISPC bit. It is recommended to use this register as a read-only (R) register.

(3) PMR — Interrupt Priority Masking Register

This register is used to mask the specified interrupt priority.

	31															16	15															0	
PMR	0	0	0	0	0	0	0	0	0	0	0	0	0	0	0	0	PM15-0																Value after reset 0000 0000_H

Table 3.34 PMR Register Contents

Bit Position	Bit Name	Function	R/W	Value After Reset
31 to 16	Reserved	When read, the value after reset is read. When writing, write the value after reset.	R	0
15 to 0	PM15-0	These bits mask an interrupt request with a priority level that corresponds to the relevant bit position. 0: Servicing of an interrupt request with a priority that corresponds to the relevant bit position is enabled. 1: Servicing of an interrupt request with a priority that corresponds to the relevant bit position is disabled. The bit positions correspond to the following priority levels: Bit — Priority 0 — Priority 0 (highest) 1 — Priority 1 : 14 — Priority 14 15 — Priority 15 and priority 16 (lowest) While a bit in this register is set to 1, interrupts (EIINTn) with the priority corresponding to that bit and FPI exception*1 are masked. Priority level judgment is therefore not performed when the system is determining whether to acknowledge an exception, meaning that exceptions will not be acknowledged*2.	R/W	0

Note 1. Since a FPI exception is specified as the same level of priority as that of an interrupt (EIINTn), it is affected by the PMR like interrupts. The priority of FPI exception is set by the FPIPR register.

Note 2. Specify the masks by setting the bits to 1 in order from the lowest-priority bit. For example, $FF00_H$ can be set, but $F0F0_H$ or $00FF_H$ cannot.

(4) ICSR — Interrupt Control Status Register

This register indicates the interrupt control status in the CPU.

	31																														2	1	0	
ICSR	0	0	0	0	0	0	0	0	0	0	0	0	0	0	0	0	0	0	0	0	0	0	0	0	0	0	0	0	0	0	0	PMFP	PMEI	Value after reset 0000 0000_H

Table 3.35 ICSR Register Contents

Bit Position	Bit Name	Function	R/W	Value After Reset
31 to 2	Reserved	When read, the value after reset is read. When writing, write the value after reset.	R	0
1	PMFP	This bit indicates that an FPI exception with the priority level masked by the PMR register exists. Be sure to clear this bit to 0.	R	0
0	PMEI	This bit indicates that an interrupt (EIINTn) with the priority level masked by the PMR register exists	R	0

(5) INTCFG — Interrupt Function Setting Register

This register is used to specify settings related to the CPU's internal interrupt function.

	31																															1	0	
INTCFG	0	0	0	0	0	0	0	0	0	0	0	0	0	0	0	0	0	0	0	0	0	0	0	0	0	0	0	0	0	0	0	0	ISPC	Value after reset $0000\ 0000_H$

Table 3.36 INTCFG Register Contents

Bit Position	Bit Name	Function	R/W	Value After Reset
31 to 1	Reserved	When read, the value after reset is read. When writing, write the value after reset.	R	0
0	ISPC	This bit changes how the ISPR register is written. 0: The ISPR register is automatically updated. Updates triggered by the program (via execution of LDSR instruction) are ignored. 1: The ISPR register is not automatically updated. Updates triggered by the program (via execution of LDSR instruction) are performed. If this bit is cleared to 0, the bits of the ISPR register are automatically set to 1 when an interrupt (EIINTn) is acknowledged, and cleared to 0 when the EIRET instruction is executed. In this case, the bits are not updated by an LDSR instruction executed by the program. If this bit is set to 1, the bits of the ISPR register are not updated by the acknowledgement of an interrupt (EIINTn) or by execution of the EIRET instruction. In this case, the bits can be updated by an LDSR instruction executed by the program. In normal cases, the ISPC bit should be cleared. When performing software-based priority control, however, set this bit to 1 and perform priority control by using the PMR register.	R/W	0

(4) FPU Function Registers

(a) Floating-point Operation Registers

The FPU uses the CPU general-purpose registers (r0 to r31). There are no register files used only for floating-point operations.

- Single-precision floating-point instruction

  Thirty-two 32-bit registers can be specified. These general-purpose registers correspond to r0 to r31.

- Double-precision floating-point instruction

  Sixteen 64-bit registers can be specified. Paired general-purpose registers are used as register pairs ({r1, r0}, {r3, r2} … {r31, r30}). Each register pair is specified in the instruction format with an even numbered register. Because r0 is a zero register (always holds "0"), in principle {r1, r0} cannot be used by a double-precision floating-point instruction.

(b) Floating-point System Registers

The FPU can use the following system registers to control floating-point operation. Reading from/ writing to a floating-point system register is performed by specifying the system register number, which consists of the register number and selection identifier, with the LDSR or STSR instructions. For details of the registers, see "*Floating-Point Function System Registers*" in *the RH850G3M User's Manual: Software*.

Table 3.37 FPU System Registers

Register No. (reg.ID, sel.ID)	Symbol	Function	Access Permission
SR6, 0	FPSR	Floating-point operation setting/status	CU0 and SV
SR7, 0	FPEPC	Floating-point operation exception program counter	CU0 and SV
SR8, 0	FPST	Floating-point status	CU0
SR9, 0	FPCC	Floating-point operation comparison result	CU0
SR10, 0	FPCFG	Floating-point function setting	CU0
SR11, 0	FPEC	Floating-point operation exception control	CU0 and SV

(5) MPU Function Registers

(a) MPU Function System Registers

Reading from/writing to an MPU function system register is performed by specifying the system register number, which consists of the register number and selection identifier, with the LDSR or STSR instructions.

Table 3.38 MPU Function System Registers (1/2)

Register No. (reg.ID, sel.ID)	Symbol	Function	Access Permission
SR0, 5	MPM	Memory protection operation mode setting	SV
SR1, 5	MPRC	MPU region control	SV
SR4, 5	MPBRGN	MPU base region number	SV
SR5, 5	MPTRGN	MPU end region number	SV
SR8, 5	MCA	Memory protection setting check address	SV
SR9, 5	MCS	Memory protection setting check size	SV
SR10, 5	MCC	Memory protection setting check command	SV
SR11, 5	MCR	Memory protection setting check result	SV
SR0, 6	MPLA0	Protection area minimum address	SV
SR1, 6	MPUA0	Protection area maximum address	SV
SR2, 6	MPAT0	Protection area attribute	SV
SR4, 6	MPLA1	Protection area minimum address	SV
SR5, 6	MPUA1	Protection area maximum address	SV
SR6, 6	MPAT1	Protection area attribute	SV
SR8, 6	MPLA2	Lower address of the protection area	SV
SR9, 6	MPUA2	Protection area maximum address	SV
SR10, 6	MPAT2	Protection area attribute	SV
SR12, 6	MPLA3	Protection area minimum address	SV
SR13, 6	MPUA3	Protection area maximum address	SV
SR14, 6	MPAT3	Protection area attribute	SV
SR16, 6	MPLA4	Protection area minimum address	SV
SR17, 6	MPUA4	Protection area maximum address	SV
SR18, 6	MPAT4	Protection area attribute	SV
SR20, 6	MPLA5	Protection area minimum address	SV
SR21, 6	MPUA5	Protection area maximum address	SV
SR22, 6	MPAT5	Protection area attribute	SV
SR24, 6	MPLA6	Protection area minimum address	SV
SR25, 6	MPUA6	Protection area maximum address	SV
SR26, 6	MPAT6	Protection area attribute	SV
SR28, 6	MPLA7	Protection area minimum address	SV
SR29, 6	MPUA7	Protection area maximum address	SV
SR30, 6	MPAT7	Protection area attribute	SV
SR0, 7	MPLA8	Protection area minimum address	SV
SR1, 7	MPUA8	Protection area maximum address	SV
SR2, 7	MPAT8	Protection area attribute	SV
SR4, 7	MPLA9	Protection area minimum address	SV
SR5, 7	MPUA9	Protection area maximum address	SV

Table 3.38 MPU Function System Registers (2/2)

Register No. (reg.ID, sel.ID)	Symbol	Function	Access Permission
SR6, 7	MPAT9	Protection area attribute	SV
SR8, 7	MPLA10	Protection area minimum address	SV
SR9, 7	MPUA10	Protection area maximum address	SV
SR10, 7	MPAT10	Protection area attribute	SV
SR12, 7	MPLA11	Protection area minimum address	SV
SR13, 7	MPUA11	Protection area maximum address	SV
SR14, 7	MPAT11	Protection area attribute	SV

Note 1. The number of incorporated MPLAn, MPUAn, and MPATn registers depends on the device. The number of protection areas in this device is 12 (n = 0 to 11).

(1) MPM — Memory Protection Operation Mode Register

The memory protection mode register is used to define the basic operating state of the memory protection function.

	31																					11	10	9	8	7						2	1	0	
MPM	0	0	0	0	0	0	0	0	0	0	0	0	0	0	0	0	0	0	0	0	0	0	DX	DW	DR	0	0	0	0	0	0	SVP	MPE	Value after reset 0000 0000_H

Table 3.39 MPM Register Contents

Bit Position	Bit Name	Function	R/W	Value After Reset
31 to 11	Reserved	When read, the value after reset is read. When writing, write the value after reset.	R	0
10	DX	This bit is not supported by this device. (Reserved for future expansion. Be sure to clear to 0.)	R	0
9	DW	This bit is not supported by this device. (Reserved for future expansion. Be sure to clear to 0.)	R	0
8	DR	This bit is not supported by this device. (Reserved for future expansion. Be sure to clear to 0.)	R	0
7 to 2	Reserved	When read, the value after reset is read. When writing, write the value after reset.	R	0
1	SVP	In SV mode. (when PSW.UM = 0), this bit is used to specify whether to restrict access according to the SX, SW, and SR bits of the MPAT register for each protection area.*1 0: As usual, implicitly enable all access in SV mode. 1: Restrict access according to the SX, SW, and SR bits even in SV mode.*2	R/W	0
0	MPE	This bit is used to specify whether to enable or disable MPU function. 0: Disable 1: Enable	R/W	0

Note 1. If the SVP bit is set to 1, access will be restricted in accord with the setting for each protection area, even in SV mode. Therefore, specify the protection area before setting the SVP bit to prevent restriction of access by the program itself.

Note 2. If access is restricted in SV mode, execution of MDP exceptions or the MIP exception handling itself might not be possible depending on the settings. Be careful to specify settings so that access to the memory area necessary for the exception handler and exception handling is permitted.

(2) MPRC — MPU Region Control Register

Bits used to perform special memory protection function operations are located in this register.

	31															16	15	14	13	12	11	10	9	8	7	6	5	4	3	2	1	0	
MPRC	0	0	0	0	0	0	0	0	0	0	0	0	0	0	0	0	E15	E14	E13	E12	E11	E10	E9	E8	E7	E6	E5	E4	E3	E2	E1	E0	Value after reset 0000 0000_H

Table 3.40 MPRC Register Contents

Bit Position	Bit Name	Function	R/W	Value After Reset
31 to 16	Reserved	When read, the value after reset is read. When writing, write the value after reset.	R	0
15 to 12	E15-E12	This bit is not supported by this device. (Reserved for future expansion. Be sure to clear to 0.)	R	0
11 to 0	E11-E0	These are the enable bits for each protection area. Bit En is a copy of bit MPATn.E (where n = 11 to 0). The number of protection areas in this device is 12.	R/W	0

(3) MPBRGN — MPU Base Region Register

This register indicates the minimum usable MPU area number.

	31																											5	4			0	
MPBRGN	0	0	0	0	0	0	0	0	0	0	0	0	0	0	0	0	0	0	0	0	0	0	0	0	0	0	0	0	MPBRGN				Value after reset 0000 0000_H

Table 3.41 MPBRGN Register Contents

Bit Position	Bit Name	Function	R/W	Value After Reset
31 to 5	Reserved	When read, the value after reset is read.	R	0
4 to 0	MPBRGN	These bits indicate the smallest number of an MPU area. These bits are always read as 0.	R	0

(4) MPTRGN — MPU End Region Register

This register indicates the maximum usable MPU area number + 1.

	31																											5	4			0	
MPTRGN	0	0	0	0	0	0	0	0	0	0	0	0	0	0	0	0	0	0	0	0	0	0	0	0	0	0	0	0	MPTRGN				Value after reset 0000 $000C_H$

Table 3.42 MPTRGN Register Contents

Bit Position	Bit Name	Function	R/W	Value After Reset
31 to 5	Reserved	When read, the value after reset is read.	R	0
4 to 0	MPTRGN	These bits indicate the largest number of an MPU area + 1. These bits indicate the maximum number of MPU areas incorporated into the hardware. The number of protection areas in this device is 12.	R	12

(5) MCA — Memory Protection Setting Check Address Register

This register is used to specify the base address of the area for which a memory protection setting check is to be performed.

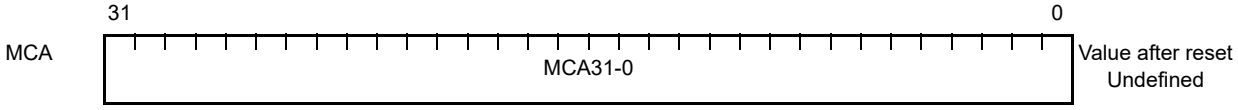

Table 3.43 MCA Register Contents

Bit Position	Bit Name	Function	R/W	Value After Reset
31 to 0	MCA31-0	These bits are used to specify the start address of the memory area subject to a memory protection setting check in bytes.	R/W	Undefined

(6) MCS — Memory Protection Setting Check Size Register

This register is used to specify the size of the area for which a memory protection setting check is to be performed.

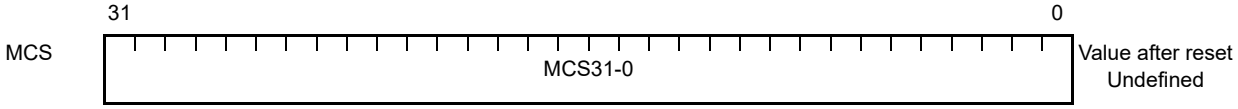

Table 3.44 MCS Register Contents

Bit Position	Bit Name	Function	R/W	Value After Reset
31 to 0	MCS31-0	These bits specify the size of the target area to specify the size of memory area subject to a memory protection setting check in bytes. These bits specify the size in bytes of a memory area that is subject to a memory protection setting. Checking in areas below the address value in the MCS register is not possible because the specified size is handled as an unsigned integer. Do not set 0000 0000_H in the MCS register.	R/W	Undefined

(7) MCC — Memory Protection Setting Check Command Register

This command register is used to start a memory protection setting check.

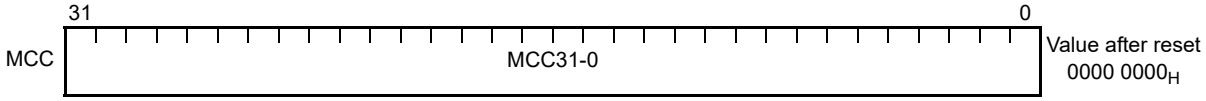

Table 3.45 MCC Register Contents

Bit Position	Bit Name	Function	R/W	Value After Reset
31 to 0	MCC31-MCC0	When any value is written to the MCC register, a memory protection setting check starts. Setting the MCA and MCS registers and then writing to this register leads to storage of the result of checking in the MCR register. Since writing any value to this register starts the check, doing so does not require any extra registers when r0 is used as a source register. The result of checking is reflected in MCR according to any area setting regardless of the setting of the PSW.UM bit. The value read from the MCC register is always 0000 0000_H.	R/W	0

(8) MCR — Memory Protection Setting Check Result Register

This register is used to store the results of a memory protection setting check.

Be sure to clear bit 31 to 9, 7 to 5, and 3 to 0.

CAUTIONS

1. If the specified area to be checked crosses 0000 0000_H, it is judged as an area setting error, and the MCR.OV bit is set to 1. This means that the MCR.OV bit must be checked to access the check results. Do not use the check result until it is confirmed that the result is not invalid (OV = 0).
2. When the default set (MPM.DX, DW, DR) is set to 1, it disables sometimes to get the correct result. If the specified default is to be enabled, do not use the memory protection setting check function.

	31																						9	8	7	6	5	4	3	2	1	0	
MCR	0	0	0	0	0	0	0	0	0	0	0	0	0	0	0	0	0	0	0	0	0	0	0	OV	0	0	SXE	SWE	SRE	UXE	UWE	URE	Value after reset Undefined

Table 3.46 MCR Register Contents

Bit Position	Bit Name	Function	R/W	Value After Reset
31 to 9	Reserved	When read, the value after reset is read. When writing, write the value after reset.	R	0
8	OV	If the specified area includes 0000 0000_H or 7FFF $FFFF_H$, 1 is stored in this bit. In other cases, 0 is stored in this bit.	R/W	Undefined
7, 6	Reserved	When read, the value after reset is read. When writing, write the value after reset.	R	0
5	SXE	If the specified area is contained within one protection area and execution is permitted for that area in supervisor mode, 1 is stored in this bit. In other cases, 0 is stored in this bit.	R/W	Undefined
4	SWE	If the specified area is contained within one protection area and writing to that area is permitted in supervisor mode, 1 is stored in this bit. In other cases, 0 is stored in this bit.	R/W	Undefined
3	SRE	If the specified area is contained within one protection area and reading from that area is permitted in supervisor mode, 1 is stored in this bit. In other cases, 0 is stored in this bit.	R/W	Undefined
2	UXE	If the specified area is contained within one protection area and execution is permitted for that area in user mode, 1 is stored in this bit. In other cases, 0 is stored in this bit.	R/W	Undefined
1	UWE	If the specified area is contained within one protection area and writing to that area is permitted in user mode, 1 is stored in this bit. In other cases, 0 is stored in this bit.	R/W	Undefined
0	URE	If the specified area is contained within one protection area and reading from that area is permitted in user mode, 1 is stored in this bit. In other cases, 0 is stored in this bit.	R/W	Undefined

(9) MPLAn — Protection Area Minimum Address Register

These registers indicate the minimum address of area n (where n = 0 to 11).

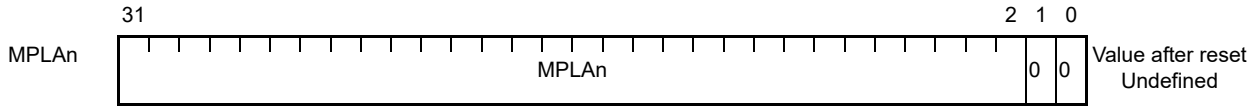

Table 3.47 MPLAn Register Contents

Bit Position	Bit Name	Function	R/W	Value After Reset
31 to 2	MPLA31-2	These bits indicate the minimum address of area n. The MPLA1-0 bits are implicitly set to 0.	R/W	Undefined
1, 0	Reserved	When read, the value after reset is read. When writing, write the value after reset.	R	0

(10) MPUAn — Protection Area Maximum Address Register

These registers indicate the maximum address of area n (where n = 0 to 11).

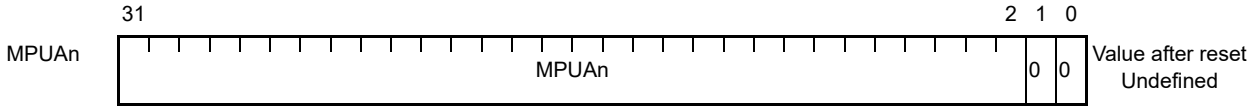

Table 3.48 MPUAn Register Contents

Bit Position	Bit Name	Function	R/W	Value After Reset
31 to 2	MPUA31-2	These bits indicate the maximum address of area n. The MPUA1-0 bits are implicitly set to 1.	R/W	Undefined
1, 0	Reserved	When read, the value after reset is read. When writing, write the value after reset.	R	0

(11) MPATn — Protection Area Attribute Register

These registers indicate the attributes of area n (where n = 0 to 11).

	31					26	25								16	15							8	7	6	5	4	3	2	1	0	
MPATn	0	0	0	0	0	0	ASID									0	0	0	0	0	0	0	0	E	G	SX	SW	SR	UX	UW	UR	Value after reset Undefined

Table 3.49 MPATn Register Contents

Bit Position	Bit Name	Function	R/W	Value After Reset
31 to 26	Reserved	When read, the value after reset is read. When writing, write the value after reset.	R	0
25 to 16	ASID	These bits indicate the ASID value to be used as the area match condition.	R/W	Undefined
15 to 8	Reserved	When read, the value after reset is read. When writing, write the value after reset.	R	0
7	E	This bit indicates whether area n is enabled or disabled. 0: Area n is disabled. 1: Area n is enabled.	R/W	0
6	G	0: ASID match is the condition. 1: ASID match is not the condition. When this bit is 0, the condition of the area match is MPATn.ASID = ASID.ASID. When this bit is 1, the values of MPATn.ASID and ASID.ASID is not the condition.	R/W	Undefined
5	SX	This bit indicates the execution privilege in supervisor mode.*1 0: Execution is disabled. 1: Execution is enabled.	R/W	Undefined
4	SW	This bit indicates the write permission in supervisor mode.*1 0: Writing is disabled. 1: Writing is enabled.	R/W	Undefined
3	SR	This bit indicates the read permission in supervisor mode*1 0: Reading is disabled. 1: Reading is enabled.	R/W	Undefined
2	UX	This bit indicates the execution privilege in user mode. 0: Execution is disabled. 1: Execution is enabled.	R/W	Undefined
1	UW	This bit indicates the write permission in user mode. 0: Writing is disabled. 1: Writing is enabled.	R/W	Undefined
0	UR	This bit indicates the read permission in user mode. 0: Reading is disabled. 1: Reading is enabled.	R/W	Undefined

Note 1. If access is restricted in SV mode, execution of MDP exceptions or the MIP exception handling itself might not be possible depending on the settings. Be careful to specify settings so that access to the memory area necessary for the exception handler and exception handling is permitted.

(6) Cache Operation Function registers

(a) Cache Control Function System Registers

Reading from/writing to a cache control function system register is performed by specifying the system register number, which consists of the register number and selection identifier, with the LDSR or STSR instructions.

Table 3.50 Cache Control System Registers

Register No. (reg.ID, sel.ID)	Symbol	Function	Access Permission
SR16, 4	ICTAGL	Instruction cache tag Lo access	SV
SR17, 4	ICTAGH	Instruction cache tag Hi access	SV
SR18, 4	ICDATL	Instruction cache data Lo access	SV
SR19, 4	ICDATH	Instruction cache data Hi access	SV
SR24, 4	ICCTRL	Instruction cache control	SV
SR26, 4	ICCFG	Instruction cache configuration	SV
SR28, 4	ICERR	Instruction cache error	SV

(1) ICTAGL — Instruction Cache Tag Lo Access Register

This register is used for CIST and CILD instructions for the instruction cache. This register holds values to be stored in the tag RAM of the instruction cache by the execution of CIST instructions and values read from the tag RAM of the instruction cache by the execution of CILD instructions.

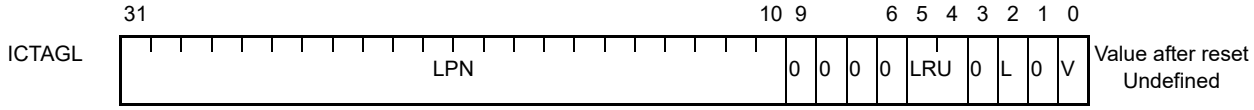

Table 3.51 ICTAGL Register Contents

Bit Position	Bit Name	Function	R/W	Value After Reset
31 to 10	LPN	These bits hold the values of bits 24 to 11, i.e. the physical page numbers. When writing, always write 0 to bits 31 to 25 and to bit 10.	R/W	Undefined
9 to 6	Reserved	When read, the value after reset is read. When writing, write the value after reset.	R	0
5, 4	LRU	These bits indicate the LRU information of the specified cache line. The CIST instruction cannot be used to change the LRU information to desired values.	R/W	Undefined
3	Reserved	When read, the value after reset is read. When writing, write the value after reset.	R	0
2	L	This bit holds the lock information.	R/W	Undefined
1	Reserved	When read, the value after reset is read. When writing, write the value after reset.	R	0
0	V	This bit retains whether the specified cache line is enabled or disabled.	R/W	Undefined

(2) ICTAGH — Instruction Cache Tag Hi Access Register

This register is used for a CIST or CILD instruction for the instruction cache. This register stores the value to be stored in the instruction cache tag RAM on CIST execution and the value read from the instruction cache tag RAM on CILD execution.

	31	30	29	28	27			24	23		16	15		8	7	6	5			2	1	0	
ICTAGH	WD	PD	WT	PT	0	0	0	0	DATAECC			TAGECC			0	*1	0	0	0	0	*1		Value after reset Undefined

Note 1. Undefined

Table 3.52 ICTAGH Register Contents

Bit Position	Bit Name	Function	R/W	Value After Reset
31	WD	When this bit is set to 1, executing a CIST instruction updates the cache data RAM.	R/W	Undefined
30	PD	When this bit is set to 1 during CIST execution, values in the DATAECC field are overwritten by ECC values for data RAM. When this value is 0, the ECC values are generated automatically from the write data.	R/W	Undefined
29	WT	This bit updates the cache tag RAM when this bit is set to 1 before CIST execution.	R/W	Undefined
28	PT	When this bit is set to 1 during CIST execution, values in the TAGECC field are overwritten by ECC for tag RAM. When this value is 0, ECC is generated automatically from the write data.	R/W	Undefined
27 to 24	Reserved	When read, the value after reset is read. When writing, write the value after reset.	R	0
23 to 16	DATAECC	These bits retain ECC of the data RAM.	R/W	Undefined
15 to 8	TAGECC	These bits retain ECC of the tag RAM. Be sure to clear bit 15 to 0.	R/W	Undefined
7	Reserved	When read, the value after reset is read. When writing, write the value after reset.	R	0
6	Reserved	When read, an undefined value is read. When writing, always write 0.	R/W	Undefined
5 to 2	Reserved	When read, the value after reset is read. When writing, write the value after reset.	R	0
1, 0	Reserved	When read, an undefined value is read. When writing, always write 0.	R/W	Undefined

(3) ICDATL — Instruction Cache Data Lo Access Register

This register is used for a CIST or CILD instruction for the instruction cache. This register stores the value to be stored in the instruction cache data RAM on CIST execution and the value read from the instruction cache data RAM on CILD execution.

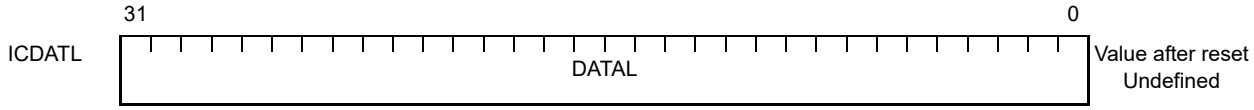

Table 3.53 ICDATL Register Contents

Bit Position	Bit Name	Function	R/W	Value After Reset
31 to 0	DATAL	These bits retain the values of bits 31 to 0 or of bit 95 to 64 from the instruction data of the block within the specified cache line. The offset of the index specifies the target range of bit numbers. Index offset = 0000: bits 31 to 0 Index offset = 1000: bits 95 to 64	R/W	Undefined

(4) ICDATH — Instruction Cache Data Hi Access Register

This register is used for a CIST or CILD instruction for the instruction cache. This register stores the value to be stored in the instruction cache data RAM on CIST execution and the value read from the instruction cache data RAM on CILD execution.

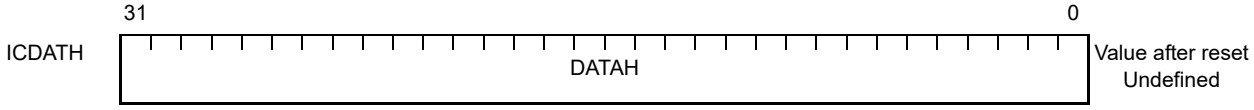

Table 3.54 ICDATH Register Contents

Bit Position	Bit Name	Function	R/W	Value After Reset
31 to 0	DATAH	These bits retain the values of bit 63 to 32 or those of bit 127 to 96 from the instruction data of the block within the specified cache line. The index offset specifies the bit number to be retained. Index offset = 0000: bit 63 to 32 Index offset = 1000: bit 127 to 96	R/W	Undefined

(5) ICCTRL — Instruction Cache Control Register

This register controls the instruction cache.

	31													18	17	16	15							9	8	7					3	2	1	0	
ICCTRL	0	0	0	0	0	0	0	0	0	0	0	0	0	0	D1EIV	1	0	0	0	0	0	0	0	ICHCLR	0	0	0	0	0	ICHEIV	ICHEMK	ICHEN	Value after reset $0001\ 0003_H$

Table 3.55 ICCTRL Register Contents

Bit Position	Bit Name	Function	R/W	Value After Reset
31 to 18	Reserved	When read, the value after reset is read. When writing, write the value after reset.	R	0
17	D1EIV	This bit selects the operation in response to 1-bit errors in the data RAM. 0: The error is corrected and then processing continues, but the address of the entry that had an error is retained. 1: The error is not corrected, the entry is cleared, and fetching is repeated. This bit is read as the previous value until the setting is actually reflected in the instruction cache.	R/W	0
16	Reserved	When read, the value after reset is read. When writing, write the value after reset.	R	1
15 to 9	Reserved	When read, the value after reset is read. When writing, write the value after reset.	R	0
8	ICHCLR	Setting this bit to 1 selects clearing of the whole instruction cache in a single operation. After this bit has been set to 1, it will be read as 1 until clearing is completed. The bit is cleared to 0 once clearing of the cache is completed.	R/W	0
7 to 3	Reserved	When read, the value after reset is read. When writing, write the value after reset.	R	0
2	ICHEIV	Setting this bit to 1 allows the instruction cache to be automatically disabled (ICHEN bit to be cleared to 0) when a cache error occurs.	R/W	0
1	ICHEMK	Setting this bit to 1 selects masking of cache error exception notifications for the CPU when cache errors are encountered.	R/W	1
0	ICHEN	This bit disables or enables the instruction cache. 0: Instruction cache is disabled. 1: Instruction cache is enabled. This bit is read as the previous value until the setting is actually reflected in the instruction cache.	R/W	1

(6) ICCFG — Instruction Cache Configuration Register

This register shows the configuration of the instruction cache.

	31															17	16	15	14					8	7			4	3			0	
ICCFG	0	0	0	0	0	0	0	0	0	0	0	0	0	0	0	1	0	ICHSIZE							ICHLINE				ICHWAY				Value after reset 0001 0844$_H$

Table 3.56 ICCFG Register Contents

Bit Position	Bit Name	Function	R/W	Value After Reset
31 to 17	Reserved	When read, the value after reset is read.	R	0
16	Reserved	When read, the value after reset is read.	R	1
15	Reserved	When read, the value after reset is read.	R	0
14 to 8	ICHSIZE	These bits indicate the capacity (in Kbytes) of the instruction cache. 000 1000: 8 Kbytes	R	08_H
7 to 4	ICHLINE	These bits indicate the number of lines per 1 way in the instruction cache. 0100: 128 lines	R	4_H
3 to 0	ICHWAY	These bits indicate the number of ways of the instruction cache. 0100: 4 ways	R	4_H

(7) ICERR — Instruction Cache Error Register

This register stores cache error data of the instruction cache.

Once the ICHERR bit is set to 1, subsequent cache error data is not stored in this register until the ICHERR bit is cleared to 0.
Also, the ICERR register is not updated during cache operation by a CILD instruction.

	31	30	29	28	27	26	25	24	23	22	21	20	19	18	17	16	15	14	13	12		5	4	3	2	1	0	
ICERR	CISTW	0	ESMH	ESPBSE	ESTE1	ESTE2	ESDC	ESDE	0	0	ERMMH	ERMPBSE	ERMTE1	ERMTE2	ERMDC	ERMDE	0	ICHE WY			ICHEIX		ICHERQ	ICHED	ICHET	0	ICHERR	Value after reset Undefined

Table 3.57 ICERR Register Contents

Bit Position	Bit Name	Function	R/W	Value After Reset
31	CISTW	This bit is set to indicate that the destination way specified for a CISTI instruction was in error. Although the entry information is overwritten so that writing is completed, the V bit will be cleared the next time the cache line is read (i.e. reading will be judged to have missed the cache). However, setting of this bit is not accompanied by an exception for the CPU.	R/W	0
30	Reserved	When read, the value after reset is read. When writing, write the value after reset.	R	0
29	ESMH	Error status: multi-hit	R/W	Undefined
28	ESPBSE	Error status: WAY error	R/W	Undefined
27	ESTE1	Error status: 1-bit error in the tag RAM	R/W	Undefined
26	ESTE2	Error status: 2-bit error in the tag RAM	R/W	Undefined
25	ESDC	Error status: 1-bit correction in the data RAM	R/W	Undefined
24	ESDE	Error status: 2-bit error in the data RAM	R/W	Undefined
23, 22	Reserved	When read, the value after reset is read. When writing, write the value after reset.	R	0
21	ERMMH	Error exception notification mask: multi-hit	R/W	0
20	ERMPBSE	Error exception notification mask: WAY error	R/W	0
19	ERMTE1	Error exception notification mask: 1-bit error in the tag RAM	R/W	0
18	ERMTE2	Error exception notification mask: 2-bit error in the tag RAM	R/W	0
17	ERMDC	Error exception notification mask: 1-bit correction in the data RAM	R/W	0
16	ERMDE	Error exception notification mask: 2-bit error in the data RAM	R/W	0
15	Reserved	When read, the value after reset is read. When writing, write the value after reset.	R	0
14, 13	ICHEWY	These bits retain a way number where a cache error occurs.	R/W	Undefined
12 to 5	ICHEIX	These bits retain a cache index where a cache error occurs.	R/W	Undefined
4	ICHERQ	Setting of this bit to 1 indicates that the CPU is being notified of a cache error exception. If cache error exceptions are masked, however, the CPU is not notified of an exception even when this bit is set to 1.	R/W	0
3	ICHED	This bit indicates that an error occurs in the data RAM.	R/W	0
2	ICHET	This bit indicates that an error occurs in the tag RAM.	R/W	0
1	Reserved	When read, the value after reset is read. When writing, write the value after reset.	R	0
0	ICHERR	This bit is set to 1 when a cache error occurs.	R/W	0

(7) Data Buffer Operation Function Registers

(a) Data Buffer Control Function System Registers

Reading from/writing to a data buffer control function system register is performed by specifying the system register number, which consists of the register number and selection identifier, with the LDSR or STSR instructions.

Table 3.58 Data Buffer Operation Function Registers

Register No. (reg.ID, sel.ID)	Symbol	Function	Access Permission
SR24,13	CDBCR	Data buffer control register	SV

(1) CDBCR — Data Buffer Control Register

This register controls the data buffer.

	31																														2	1	0	
CDBCR	0	0	0	0	0	0	0	0	0	0	0	0	0	0	0	0	0	0	0	0	0	0	0	0	0	0	0	0	0	0	0	CDBCLR	CDBEN	Value after reset $0000\ 0001_H$

Table 3.59 CDBCR Register Contents

Bit Position	Bit Name	Function	R/W	Value After Reset
31 to 2	Reserved	When read, the value after reset is read. When writing, write the value after reset.	R	0
1	CDBCLR	When this bit is set to 1, the data buffer is cleared at a time. This bit is always read as 0.	W	0
0	CDBEN	This bit disables or enables the data buffer. 0: Data buffer is disabled. 1: Data buffer is enabled.	R/W	1

3.2.2 Instruction Cache and Data Buffer

3.2.2.1 Features

An 8-Kbyte and 4-way set-associative Instruction Cache is mounted between the CPU1 and the Code Flash. The Instruction Cache and the Code Flash are connected to each other via a 128-bit dedicated bus to minimize penalties caused by a cache miss-hit. Also a Data Buffer is mounted between the CPU1 and the Code Flash to achieve high-speed data access. The 32-MB area from $0000\ 0000_H$ to $01FF\ FFFF_H$ in the address space is intended for the Instruction Cache and Data Buffer.

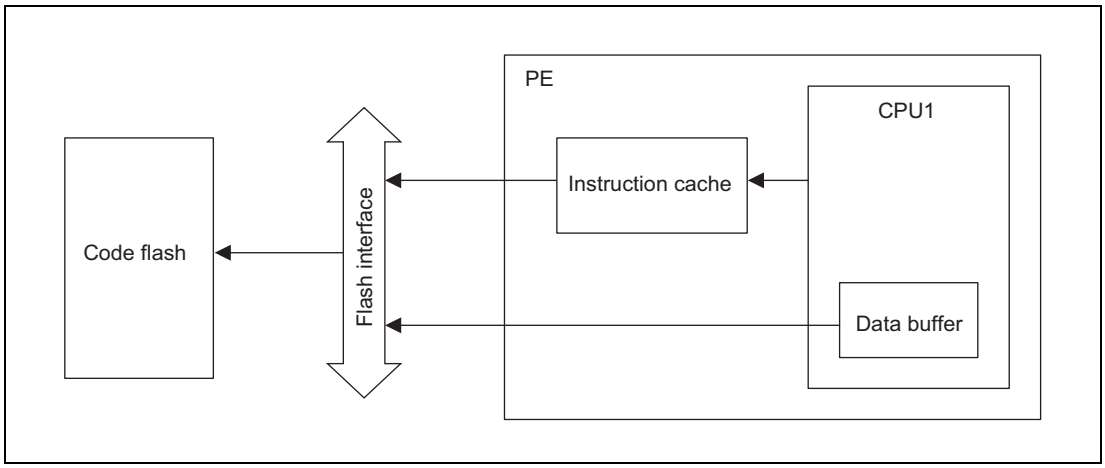

Figure 3.2 Instruction Cache and Data Buffer

3.2.2.2 Instruction Cache Function

The 8-Kbyte and 4-way set-associative cache includes four ways consisting of 128-entry blocks of four words per line, amounting to 8-Kbyte capacity in total. The ways are divided into two groups, way group 0 consisting of way0 and way1 and way group 1 consisting of way2 and way3. The way group can be selected and used by decoding of the address information of the access destination. If a cache error occurs, each line is refilled by a replace algorithm using LRU. CPU instruction fetches from the code flash are performed via the instruction cache.

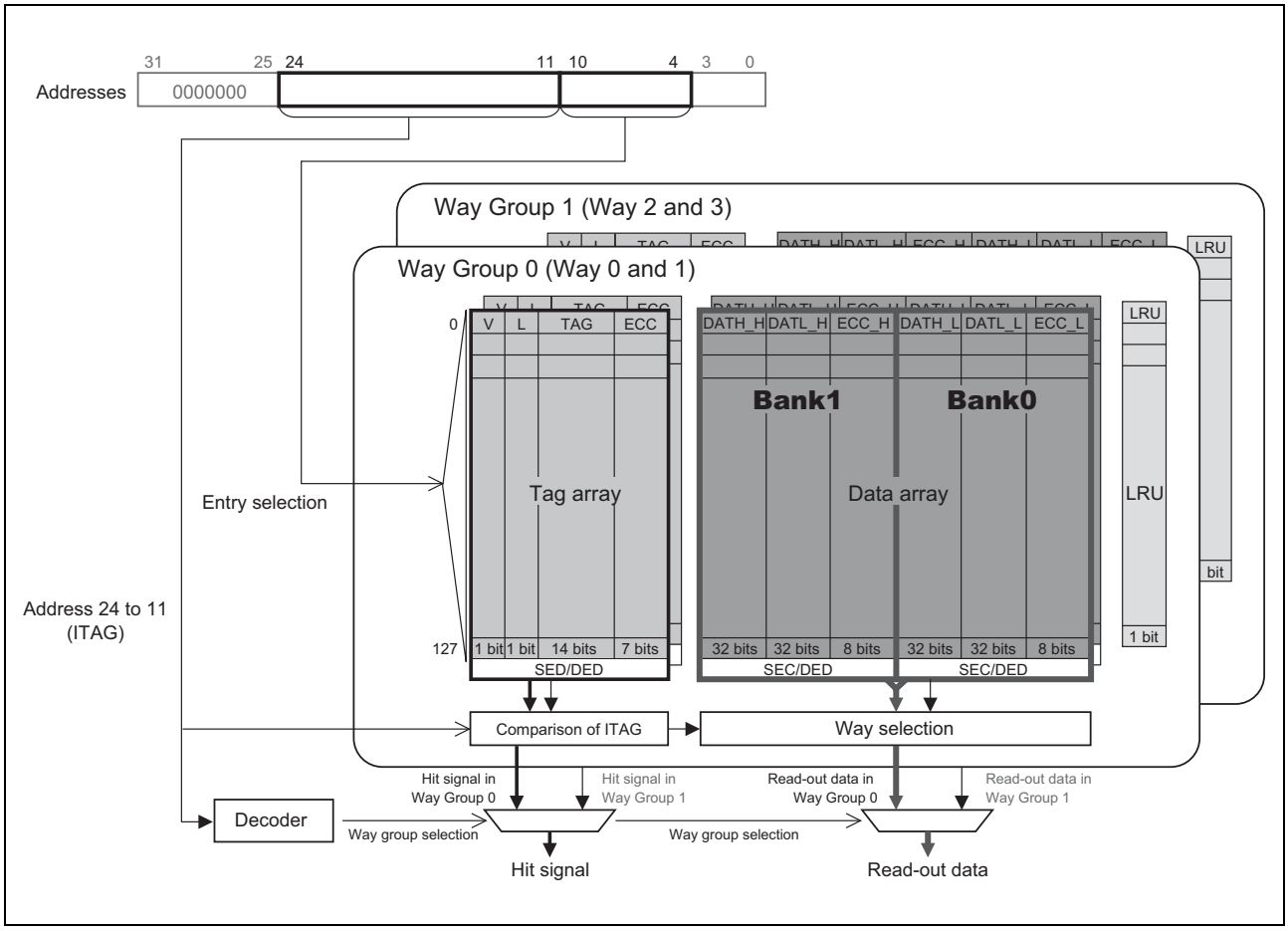

Figure 3.3 Instruction Cache Configuration

Tag Array

V bit	This bit indicates whether valid data is stored in the cache line. Setting of this bit to 1 makes the cache line data valid. The V bit is initialized to 0 by reset.
L bit	This bit indicates whether a cache line is locked or not. Setting of this bit to 1 locks the cache line and it cannot be replaced with new data. The L bit is valid only when the V bit is 1, and it is not initialized by reset.
TAG	Among 32 bits in the operable addresses of the data line to be cached, bits 24 to 11 are stored in this bit. The TAG bit is not initialized by reset.
ECC	The ECC of the tag array is stored in this bit. The ECC bit is not initialized by reset.

Data Array

DATH_H, DATL_H, DATH_L, DATL_L	The 128-bit cache line data is stored per 32 bits as follows: the bits [127:96], [95:64], [63:32], [31:0] in the DATH_H, DATL_H, DATH_L, and DATL_L, respectively. In the CIST or CILD operation in response to a cache instruction, the ICDATH register is used for DATH_H and DATH_L and ICDATL is used for DATL_H and DATL_L.
ECC_H, ECC_L	The ECC of the data in bits [127:64] and [63:0] are stored in ECC_H and ECC_L, respectively.

LRU

LRU	The LRU information in the same way group is stored in this data array. The LRU is initialized by reset.

CAUTION

When an instruction is fetched from an applicable line after issuing a CIST instruction for writing test data to the tag array of the instruction cache, the tag information must be written in a way group unit. For example, when writing tag information to a line on the way 0 side of way group 0, also write tag information for the same line to way 1, and then execute the instruction fetch

- When writing to way group 0 (way0 and way1), write a value such that the exclusive OR of the ICTAGL.LPN bit is 0.
- When writing to way group 1 (way 2 and way 3), write a value such that the exclusive OR of the ICTAGL.LPN bit is 1.

Fetching an instruction after a value that does not follow the above rule has been written to the tag array causes a way error and setting of the ICERR.ESPBSE bit to 1. Fetching an instruction after the same tag information has been written to the same lines of both ways in a way group causes a multi-hit error and setting of the ICERR.ESMH bit to 1.

3.2.2.3 Data Buffer Function

The four-line buffer with 128 bits per line is mounted as a data buffer. The data of 128 bits per line read from the code flash is stored in the data buffer. The data is read out from the data buffer after the next access to the same address, so the code flash is not accessed again.

3.2.3 Reliability Functions

3.2.3.1 PE Guard Function (PEG)

(1) Overview of the PEG Function

The PEG is a constituent of the slave guard system to prevent unauthorized access to the resources in the PE from the external master. This function protects access to the local RAM in the PE. In the initial state after a reset, all access by masters other than the PE itself is disabled. Setting the registers listed in **(3) List of PEG Protection Setting Registers**, enables access by masters other than the PE itself.

(1) Detecting PE guard violation

If the external master outside the PE makes an unauthorized access to the resource area in the PE for which PE guard is set, the access is detected as a PE guard violation.

(2) Blocking unauthorized accesses

When a PE guard violation is detected, unauthorized accesses to the internal resources of the PE are blocked to prevent the contents of PE resources from being modified illegally.

(3) Notifying occurrence of violation

When a PE guard violation is detected, it is notified to ECM. When the DMAC or DTS makes an unauthorized access, a DMA transfer error is detected.

(2) Protection Made by SPID

- Setting PEG Protection
  - Up to four areas can be set depending on the Local RAM address of the own PE.
  - The area range is specified by the base address and the mask bit (4 Kbytes to 4 Gbytes).
  - “Read enable” and “write enable” can be set for each area.
  - “Enable” or “disable” can be selected on each system protection identifier (SPID) basis for each area.
- Access permission by the system protection identifier (SPID) (see **Figure 3.4**)

1. When any of enabled area 0 to area 3 is to be accessed, go to step 3.
   Otherwise, return an error response.
2. Are all the conditions below for the relevant area met?
   - The system protection identifier (SPID) is enabled.
   - Required operations (read/write) are enabled.
     Otherwise, return an error response.

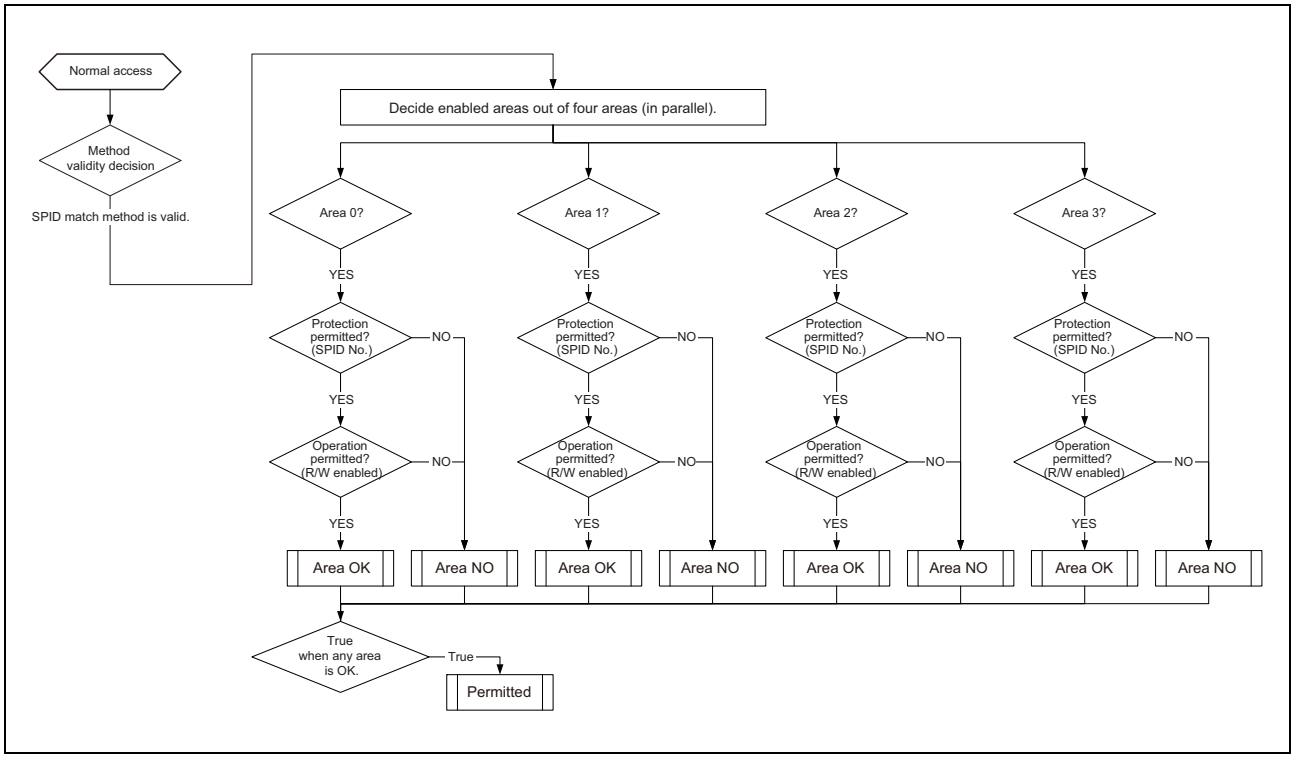

Figure 3.4 Access Permission by the System Protection Identifier (SPID)

(3) List of PEG Protection Setting Registers

Make necessary settings for the following registers to protect PE resources from unauthorized accesses by the external master.

- Accesses to the Local RAM in the PE are permitted as detection targets.
- For accesses to the register set, no access restriction is provided independently for the PEG function. Set access protections such as IPG at the user side as necessary.
- To set PEG protection, follow the procedure below. (n = 0 to 3)
  - Set the PE guard area n mask setting register as PEGGnMK.
  - Set the PE guard area n base setting register as PEGGnBA.

Table 3.60 List of Registers

Address Offset	Size (Byte)	Register Name	Abbreviation	Right	R/W	Operable Bit 1	8	16	32	Initial Value
$+00C_H$	2	PE guard SPID master decision control register	PEGSP	—	R/W	—	√	√	—	0000_H
$+080_H$	4	PE guard area 0 mask setting register	PEGG0MK	—	R/W	—	√	√	√	$0000\ 0000_H$
$+084_H$	4	PE guard area 0 base setting register	PEGG0BA	—	R/W	—	√	√	√	$0000\ 0000_H$
$+090_H$	4	PE guard area 1 mask setting register	PEGG1MK	—	R/W	—	√	√	√	$0000\ 0000_H$
$+094_H$	4	PE guard area 1 base setting register	PEGG1BA	—	R/W	—	√	√	√	$0000\ 0000_H$
$+0A0_H$	4	PE guard area 2 mask setting register	PEGG2MK	—	R/W	—	√	√	√	$0000\ 0000_H$
$+0A4_H$	4	PE guard area 2 base setting register	PEGG2BA	—	R/W	—	√	√	√	$0000\ 0000_H$
$+0B0_H$	4	PE guard area 3 mask setting register	PEGG3MK	—	R/W	—	√	√	√	$0000\ 0000_H$
$+0B4_H$	4	PE guard area 3 base setting register	PEGG3BA	—	R/W	—	√	√	√	$0000\ 0000_H$

Note: Base address: $FFFE\ E600_H$

(4) Register Set

(a) PEGSP — PE Guard SPID Master Decision Control Register

This register is used to enable or disable access by an external master to the resources in the PE. The initial value of the SPEN bit is 0, which disables access to PE resources by an external master. Setting the SPEN bit to 1 enables access by an external master under the conditions set by PEGGnBA and PEGGnMK.

Bit	15	14	13	12	11	10	9	8	7	6	5	4	3	2	1	0
	—	—	—	—	—	—	—	—	—	—	—	—	—	—	—	SPEN
Value after reset	0	0	0	0	0	0	0	0	0	0	0	0	0	0	0	0
R/W	R	R	R	R	R	R	R	R	R	R	R	R	R	R	R	R/W

Table 3.61 PEGSP Register Contents

Bit Position	Bit Name	Function
15 to 1	Reserved	When read, the value after reset is read. When writing, write the value after reset.
0	SPEN	This bit enables or disables detection of accesses by the external master having SPID. 0: Detection of accesses by the external master having SPID is disabled. 1: Detection of accesses by the external master having SPID is enabled.

(b) PEGGnMK — PE Guard Area n Mask Setting Register

In combination with the PEGGnBA register, this register specifies a range or ranges within PE guard protection area n. Setting a GnMASK bit to 1 masks the corresponding address bit in the PEGGnBA register and places the corresponding area or areas inside the range of PE guard area n. The minimum size of the PE guard protection area is 4 KB.

Ex.) With the settings of PEGGnBA[31:12] = $FEBF6_H$ and PEGGnMK[31:12] = 00008_H, the PE guard protection area n is specified within the ranges from FEBF 6000_H to FEBF $6FFF_H$ and FEBF $E000_H$ to FEBF $EFFF_H$.

Bit	31	30	29	28	27	26	25	24	23	22	21	20	19	18	17	16
	GnMASK															
Value after reset	0	0	0	0	0	0	0	0	0	0	0	0	0	0	0	0
R/W	R/W	R/W	R/W	R/W	R/W	R/W	R/W	R/W	R/W	R/W	R/W	R/W	R/W	R/W	R/W	R/W

Bit	15	14	13	12	11	10	9	8	7	6	5	4	3	2	1	0
	GnMASK				—	—	—	—	—	—	—	—	—	—	—	—
Value after reset	0	0	0	0	0	0	0	0	0	0	0	0	0	0	0	0
R/W	R/W	R/W	R/W	R/W	R	R	R	R	R	R	R	R	R	R	R	R

Table 3.62 PEGGnMK Register Contents

Bit Position	Bit Name	Function
31 to 12	GnMASK	These bits determine whether to mask the base address PEGGnBA[31:12] that specifies the range of PE guard protection area n. 0: Target address bits are compared when determining the PE guard area. 1: Target address bits are not compared when determining the PE guard area.
11 to 0	Reserved	When read, the value after reset is read. When writing, write the value after reset.

(c) PEGGnBA — PE Guard Area n Base Setting Register

In combination with the PEGGnMK register, this register specifies a range or ranges within PE guard protection area n. Setting the GnEN bit to 1 brings the address enable conditions specified by this register and the PEGGnMK register into effect.

Bit	31	30	29	28	27	26	25	24	23	22	21	20	19	18	17	16
	GnBASE															
Value after reset	0	0	0	0	0	0	0	0	0	0	0	0	0	0	0	0
R/W	R/W	R/W	R/W	R/W	R/W	R/W	R/W	R/W	R/W	R/W	R/W	R/W	R/W	R/W	R/W	R/W

Bit	15	14	13	12	11	10	9	8	7	6	5	4	3	2	1	0
	GnBASE				—	—	—	—	GnSP3	GnSP2	GnSP1	GnSP0	—	GnWR	GnRD	GnEN
Value after reset	0	0	0	0	0	0	0	0	0	0	0	0	0	0	0	0
R/W	R/W	R/W	R/W	R/W	R	R	R	R	R/W	R/W	R/W	R/W	R	R/W	R/W	R/W

Table 3.63 PEGGnBA Register Contents

Bit Position	Bit Name	Function
31 to 12	GnBASE	Base address that specifies PE guard protection area n
11 to 8	Reserved	When read, the value after reset is read. When writing, write the value after
7	GnSP3	Enables accesses to PE guard protection area n by the external master. 0: Access by an external master having SPID = 3 is disabled. 1: Access by an external master having SPID = 3 is enabled.
6	GnSP2	Enables accesses to PE guard protection area n by the external master. 0: Access by an external master having SPID = 2 is disabled. 1: Access by an external master having SPID = 2 is enabled.
5	GnSP1	Enables accesses to PE guard protection area n by the external master. 0: Access by an external master having SPID = 1 is disabled. 1: Access by an external master having SPID = 1 is enabled.
4	GnSP0	Enables accesses to PE guard protection area n by the external master. 0: Access by an external master having SPID = 0 is disabled. 1: Access by an external master having SPID = 0 is enabled.
3	Reserved	When read, the value after reset is read. When writing, write the value after reset.
2	GnWR	Enables write access to PE guard protection area n. 0: Write access is disabled. 1: Write access is enabled.
1	GnRD	Enables read access to PE guard protection area n. 0: Read access is disabled. 1: Read access is enabled.
0	GnEN	PE guard protection area n enable 0: Settings for access enable conditions are disabled 1: Settings for access enable conditions are enabled

CAUTION

PEGGnBA.GnEN is cleared by writing to the PEGGnMK register.

3.2.3.2 PE's Internal Peripheral Device Protection Function (IPG)

(1) Overview of the IPG Function

The IPG is a system to prevent unauthorized accesses to peripheral devices from the CPU core equipped with the IPG. The IPG achieves the following functions. The IPG covers accesses to resources except the ROM and the local RAM.

(1) Detecting violation of peripheral device protection

If the CPU makes an unauthorized access to an area (peripheral device) for which peripheral device protection is set, the access is detected as "violation of peripheral device protection."

(2) Storing unauthorized-access information

When a violation of peripheral device protection is detected, the unauthorized-access information is stored in the IPG's internal register.

(3) Blocking unauthorized accesses

When a violation of peripheral device protection is detected, unauthorized accesses to peripheral devices are blocked to prevent contents of peripheral devices from being modified illegally.

(4) Notifying violation

When a violation of peripheral device protection is detected, a system error exception (SYSERR exception) request for generating an exception is made to ask the CPU to stop the processing.

For system error exceptions (SYSERR exceptions), see **Section 3.2.3.3, System Error Notification Control Function (SEG)**.

(5) Invalidating subsequent accesses

When a violation of peripheral device protection is detected, subsequent accesses (regardless of authorized or unauthorized accesses) are blocked until instructions from the CPU are received.

NOTE

Even if a request for generating an exception is immediately sent to the CPU in step (4) above, a subsequent access issued (before receiving a request from the IPG) by the CPU that does not know an occurrence of violation may illegally modify contents of peripheral devices. (Accesses after a violation has occurred result in unauthorized accesses.)

(2) IPG Function

(1) This function invalidates accesses according to their attributes (including address, transfer type, and access right).

(2) After an access right violation is detected until the error flag (described later) is cleared by writing by the software, subsequent accesses are invalidated. However, invalidation is applied only to accesses from the CPU and is not applied to accesses from outside the CPU core. Invalidation is performed independently of addresses.

(3) When a request for accessing different peripheral devices simultaneously is made due to misalignment or double-word access, the access is executed when all such accesses are enabled.

(3) IPG Protection Setting Registers for Illegal Users

To protect peripheral devices from unauthorized accesses by programs in user mode, the registers below require the settings listed in the table.

- Accesses in user mode in each machine are to be detected.
- This register set is intended for IPG settings related to user mode and reading of the IPG settings within its own machine.

Table 3.64 List of Registers

Address Offset	Size (Byte)	Register Name	Abbreviation	Right*1	R/W	Operable Bit 1	8	16	32	Value After Reset
$+002_H$	2	Peripheral device protection violation access information register	IPGECRUM	SV	R/W	—	—	√	—	Undefined (retained)
$+008_H$	4	Peripheral device protection violation access address register	IPGADRUM	SV	R/W	—	—	—	√	Undefined (retained)
$+00D_H$	1	Peripheral device protection enable register	IPGENUM	SV	R/W	√	√	—	—	00_H
$+020_H$	1	Peripheral device protection setting register 0	IPGPMTUM0	SV	R/W	√	√	—	—	00_H
$+022_H$	1	Peripheral device protection setting register 2	IPGPMTUM2	SV	R/W	√	√	—	—	00_H
$+023_H$	1	Peripheral device protection setting register 3	IPGPMTUM3	SV	R/W	√	√	—	—	00_H
$+024_H$	1	Peripheral device protection setting register 4	IPGPMTUM4	SV	R/W	√	√	—	—	00_H

Note 1. Registers for which “SV” is described are accessible by machine with SV right (UM = 0).

Note: Base address: $FFFE\ E000_H$

(4) Register Set

(a) IPGECRUM — Peripheral Device Protection Violation Access Information Register

Bit	15	14	13	12	11	10	9	8	7	6	5	4	3	2	1	0
	—	—	—	—	—	—	—	—	DS				EX	WR	RD	VD
Value after reset	0	0	x	x	x	x	x	x	x	x	x	x	x	x	x	x
R/W	R	R	R	R	R	R	R	R	R/W	R/W	R/W	R/W	R/W	R/W	R/W	R/W

×: Undefined (retained)

Table 3.65 Register Contents of IPGECRUM

Bit Position	Bit Name	Function
15, 14	Reserved	When read, the value after reset is read. When writing, write the value after reset.
13 to 8	Reserved	When read, an undefined value is read. When writing, always write 0.
7 to 4	DS	These bits store the data size of access that made a violation. 1000: Double-word (8 bytes) 0100: Word (4 bytes) 0010: Half-word (2 bytes) 0001: Byte Other than above: RFU
3	EX	This bit is set to 1 when a violation occurred in an instruction fetch read access. In other cases, this bit is cleared to 0.
2	WR	This bit is set to 1 when a violation occurred in a write access or bit operation or CAXI. In other cases, this bit is cleared to 0.
1	RD	This bit is set to 1 when a violation occurred in a read access or bit operation or CAXI. In other cases, this bit is cleared to 0.
0	VD	This bit is set to 1 when a violation of peripheral device protection is detected by a program with the relevant right. If another violation of peripheral device protection is detected, data of this IPGECRUM register and the IPGADRUM register is updated.

NOTE

When the IRE bit value of the IPG0ENUM register (described later) is 0 and violation of peripheral device protection by a program operating in user mode is an instruction fetch read access, no bit of this register is updated.

(b) IPGADRUM — Peripheral Device Protection Violation Access Address Register

Bit	31	30	29	28	27	26	25	24	23	22	21	20	19	18	17	16
	EADR															
Value after reset	x	x	x	x	x	x	x	x	x	x	x	x	x	x	x	x
R/W	R/W	R/W	R/W	R/W	R/W	R/W	R/W	R/W	R/W	R/W	R/W	R/W	R/W	R/W	R/W	R/W

Bit	15	14	13	12	11	10	9	8	7	6	5	4	3	2	1	0
	EADR															
Value after reset	x	x	x	x	x	x	x	x	x	x	x	x	x	x	x	x
R/W	R/W	R/W	R/W	R/W	R/W	R/W	R/W	R/W	R/W	R/W	R/W	R/W	R/W	R/W	R/W	R/W

×: Undefined (retained)

Table 3.66 Register Contents of IPGADRUM

Bit Position	Bit Name	Function
31 to 0	EADR	These bits store the address of the access in which a violation occurred.

NOTE

When the IRE bit value of the IPG0ENUM register (described later) is 0 and violation of peripheral device protection by a program operating in user mode is an instruction fetch read access, no bit of this register is updated.

(c) IPGENUM — Peripheral Device Protection Enable Register

Bit	7	6	5	4	3	2	1	0
	—	—	—	—	—	—	IRE	E
Value after reset	0	0	0	0	0	0	0	0
R/W	R	R	R	R	R	R	R/W	R/W

Table 3.67 Register Contents of IPGENUM

Bit Position	Bit Name	Function
7 to 2	Reserved	When read, the value after reset is read. When writing, write the value after reset.
1	IRE	This bit sets whether to store the access information in the peripheral device protection violation access address register and the peripheral device protection violation access information register when a violation of peripheral device protection occurred in an instruction fetch access. 0: Instruction fetch access information is not stored. 1: Instruction fetch access information is stored. **CAUTION** If you do not want to detect speculative instruction fetches (no instruction is executed in some cases), clear this bit to 0.
0	E	This bit enables or disables the peripheral devices protection function against accesses by the relevant access right. 0: The peripheral device protection function is disabled. 1: The peripheral device protection function is enabled.

(d) IPGPMTUM0 — Peripheral Device Protection Setting Register 0

Bit	7	6	5	4	3	2	1	0
	—	X1	W1	R1	—	X0	W0	R0
Value after reset	0	0	0	0	0	0	0	0
R/W	R	R/W	R/W	R/W	R	R/W	R/W	R/W

Table 3.68 Register Contents of IPGPMTUM0

Bit Position	Bit Name	Function
7	Reserved	When read, the value after reset is read. When writing, write the value after reset.
6	X1	This bit sets whether to enable instruction fetch read access to peripheral IP groups 0 to 3 and 5. 0: Instruction fetch read access to peripheral IP groups 0 to 3 and 5 is treated as violation. 1: Instruction fetch read access to peripheral IP groups 0 to 3 and 5 is not restricted.
5	W1	This bit sets whether to enable write access to peripheral IP groups 0 to 3 and 5. 0: Write access to peripheral IP groups 0 to 3 and 5 is treated as violation. 1: Write access to peripheral IP groups 0 to 3 and 5 is not restricted.
4	R1	This bit sets whether to enable read access to peripheral IP groups 0 to 3 and 5. 0: Read access to peripheral IP groups 0 to 3 and 5 is treated as violation. 1: Read access to peripheral IP groups 0 to 3 and 5 is not restricted.
3	Reserved	When read, the value after reset is read. When writing, write the value after reset.
2	X0	This bit sets whether to enable instruction fetch read access to peripheral devices to be connected to the H-Bus. 0: Instruction fetch read access to peripheral devices to be connected to the H-Bus is treated as violation. 1: Instruction fetch read access to peripheral devices to be connected to the H-Bus is not restricted.
1	W0	This bit sets whether to enable write access to peripheral devices to be connected to the H-Bus. 0: Write access to peripheral devices to be connected to the H-Bus is treated as violation. 1: Write access to peripheral devices to be connected to the H-Bus is not restricted.
0	R0	This bit sets whether to enable read access to peripheral devices to be connected to the H-Bus. 0: Read access to peripheral devices to be connected to the H-Bus is treated as violation. 1: Read access to peripheral devices to be connected to the H-Bus is not restricted.

(e) IPGPMTUM2 — Peripheral Device Protection Setting Register 2

Bit	7	6	5	4	3	2	1	0
	—	—	W1	R1	—	—	W0	R0
Value after reset	0	0	0	0	0	0	0	0
R/W	R	R	R/W	R/W	R	R	R/W	R/W

Table 3.69 Register Contents of IPGPMTUM2

Bit Position	Bit Name	Function
7, 6	Reserved	When read, the value after reset is read. When writing, write the value after reset.
5	W1	This bit sets whether to enable write access to COMPTEST. 0: Write access to COMPTEST is treated as violation. 1: Write access to COMPTEST is not restricted.
4	R1	This bit sets whether to enable read access to COMPTEST. 0: Read access to COMPTEST is treated as violation. 1: Read access to COMPTEST is not restricted.
3, 2	Reserved	When read, the value after reset is read. When writing, write the value after reset.
1	W0	This bit sets whether to enable write access to INTC1. 0: Write access to INTC1 is treated as violation. 1: Write access to INTC1 is not restricted.
0	R0	This bit sets whether to enable read access to INTC1. 0: Read access to INTC1 is treated as violation. 1: Read access to INTC1 is not restricted.

(f) IPGPMTUM3 — Peripheral Device Protection Setting Register 3

Bit	7	6	5	4	3	2	1	0
	—	—	W1	R1	—	—	—	—
Value after reset	0	0	0	0	0	0	0	0
R/W	R	R	R/W	R/W	R	R	R	R

Table 3.70 Register Contents of IPGPMTUM3

Bit Position	Bit Name	Function
7, 6	Reserved	When read, the value after reset is read. When writing, write the value after reset.
5	W1	This bit sets whether to enable write access to SysErrGen. 0: Write access to SysErrGen is treated as violation. 1: Write access to SysErrGen is not restricted.
4	R1	This bit sets whether to enable read access to SysErrGen. 0: Read access to SysErrGen is treated as violation. 1: Read access to SysErrGen is not restricted
3 to 0	Reserved	When read, the value after reset is read. When writing, write the value after reset.

(g) IPGPMTUM4 — Peripheral Device Protection Setting Register 4

Bit	7	6	5	4	3	2	1	0
	—	—	—	—	—	—	W0	R0
Value after reset	0	0	0	0	0	0	0	0
R/W	R	R	R	R	R	R	R/W	R/W

Table 3.71 Register Contents of IPGPMTUM4

Bit Position	Bit Name	Function
7 to 2	Reserved	When read, the value after reset is read. When writing, write the value after reset.
1	W0	This bit sets whether to enable write access to the PEG in user mode. 0: Write access to PEG is treated as violation. 1: Write access to PEG is not restricted.
0	R0	This bit sets whether to enable read access to the PEG in user mode. 0: Read access to PEG is treated as violation. 1: Read access to PEG is not restricted

3.2.3.3 System Error Notification Control Function (SEG)

Errors due to an instruction fetch or data access can be the sources of system error exceptions. A SYSERR exception is an FE level exception from which return or recovery is not possible.

For source codes (FEIC) of the SYSTEM exceptions and error handling, see **Table 3.74, Error Factor Codes and Handling of G3M Core SYSERR Exceptions**.

SEG (SysErrGen) controls the notification and record of the error by the data access. Instruction cache errors occurred on the RAM are notified to the SEG. For details, see section **(a) SEGCONT — Error Notification Control Register** and **(c) Supplementary information on SYSERR exception**.

Multiple error occurrence inputs are categorized according to error factors, and are processed sequentially from the highest-priority error factor, generating an FE-level asynchronous exception (SYSERR).

The bit position of the SEGFLAG register becomes the priority of error factors. Error factors of lower bits take precedence over error factors of upper bits.

Error information is recorded once regardless of error frequency.

The error with the highest priority of error factor (in case errors occurred simultaneously) is valid. Recorded error information is not overwritten by subsequent errors.

(1) List of SEG Function Control Registers

Table 3.72 List of Registers

Address Offset	Size (Byte)	Register Name	Abbreviation	Right	R/W	Operable Bit 1	8	16	32	Value After Reset
$+00_H$	2	Error notification control register	SEGCONT	—	R/W *1	—	—	√	—	0000_H
$+02_H$	2	Error occurrence retention register	SEGFLAG	—	R/W *1	—	—	√	—	0000_H
$+08_H$	4	Error factor retention register (address)	SEGADDR	—	R/W *1	—	—	√	√	Undefined (retained)

Note 1. Write accesses from other than the HV privilege on the native machine are ignored.

Note: Base address: FFFE $E980_H$

NOTE

- If an access is made with an address offset or operable bits other than those specified above, an error response is returned.
- Write access is only possible in supervisor mode (VM = 0). Attempting to write in other modes leads to an error response being returned.
- No restriction is provided for read accesses.
- Read accesses to ranges permitted by other protection systems are enabled at any time.

(2) Register Set

(a) SEGCONT — Error Notification Control Register

- This register is used to enable (= 1) or disable (= 0) notification of SYSERR request in response to error flags that store error occurrence status according to factors.

Bit	15	14	13	12	11	10	9	8	7	6	5	4	3	2	1	0
	—	—	—	—	—	—	VPGE	VCRE	—	TCME	ROME	VCIE	—	ICCE	—	—
Value after reset	0	0	0	0	0	0	0	0	0	0	0	0	0	0	0	0
R/W	R	R	R	R	R	R	R/W	R/W	R	R/W	R/W	R/W	R	R/W	R	R

Table 3.73 SEGCONT Register Contents (1/2)

Bit Position	Bit Name	Function
15 to 10	Reserved	When read, the value after reset is read. When writing, write the value after reset.
9	VPGE	This bit notifies of a response to an error in P-Bus. The error includes the followings: • P-Bus guard error in write access (P-bus guarding applies to the guarding of the registers in the modules for protection listed in **Section 31.4.2**)
8	VCRE	This bit notifies of IPG violation access detection and subsequent access blocking (including instruction fetch).*2
7	Reserved	When read, the value after reset is read. When writing, write the value after reset.
6	TCME	This bit notifies of an error during data accessing data to its own local RAM. The error includes the following cases: • When an ECC error which cannot be corrected occurs • When an access to the RAM-unimplemented area in the local RAM is detected
5	ROME	This bit notifies of an error in access to the Code Flash when a table reference is read in response to a table reference interrupt. The error includes the following cases: • When an ECC error which cannot be corrected occurs • When an address parity error occurs

Table 3.73 SEGCONT Register Contents (2/2)

Bit Position	Bit Name	Function
4	VCIE	• This bit notifies of a response to an error in P-Bus (excluding errors in writing to P-Bus). The error includes the following cases: – When an unimplemented area (FFFF 7900_H to FFFF $7EFF_H$) is accessed – P-Bus guard error (P-bus guarding applies to the guarding of the registers in the modules for protection listed in **Section 31.4.2**) – P-Bus data parity error (for a peripheral function which the data parity is applied to) – An error when DTSRAM is read • Access to unimplemented area in the CPU-specific functions • This bit notifies of a response to an error in the Code Flash The error includes the following cases: – When an ECC error which cannot be corrected occurs – When an address parity error occurs • This bit notifies of a response to an error in Data Flash The error includes the following cases: – The occurrence of ECC error that cannot be corrected*[1] • This bit notifies of a detection of access to an interconnect reserved area. – FFFF 0000_H to FFFF $4FFF_H$ – FFFE 0000_H to FFFE $BFFF_H$ – FB00 0000_H to FE9F $FFFF_H$ – F300 0000_H to F8FF $FFFF_H$ • This bit notifies of a IPG violation access detection and subsequent access blocking.*[2] • This bit notifies of an access privilege violation. – Read or write access to the IPG Protection Setting Registers by user mode (PSW.UM = 1). – Write access to the SEG Function Control Registers by user mode (PSW.UM = 1).
3	Reserved	When read, the value after reset is read. When writing, write the value after reset.
2	ICCE	Instruction cache error notification enable The error occurred in the instruction cache is handled when the instruction cache system register, ICCTRL.ICHEMK, is set to 0 (whose value after reset is 1): For instruction cache errors, see **(7) ICERR — Instruction Cache Error Register** in **Section 3.2.1.2, Register Set**
1, 0	Reserved	When read, the value after reset is read. When writing, write the value after reset.

Note 1. While ECC error notification is enabled, an uncorrectable ECC error has occurred. Whether or not the error can be corrected depends on the ECC settings. For details, see **Section 31.2, ECC and EDC**.

Note 2. For error factor address, see **Section 3.2.3.2, PE's Internal Peripheral Device Protection Function (IPG)**, IPGADRUM register.

Table 3.74 Error Factor Codes and Handling of G3M Core SYSERR Exceptions (1/2)

Factor Codes	Error Contents
10	Reserved
11	Instruction fetch errors (from code flash memory)
12	Errors in which their notification is enabled by the SEGCONT second bit
13	Instruction fetch errors (from other than code flash memory)
14	Errors in which their notification is enabled by the SEGCONT fourth bit

Table 3.74 Error Factor Codes and Handling of G3M Core SYSERR Exceptions (2/2)

Factor Codes	Error Contents
15	Errors in which their notification is enabled by the SEGCONT fifth bit
16	Errors in which their notification is enabled by the SEGCONT sixth bit
17	Reserved
18	Errors in which their notification is enabled by the SEGCONT eighth bit
19	Errors in which their notification is enabled by the SEGCONT ninth bit
1A	Reserved
1B	Reserved
1C	Reserved
1D	Reserved
1E	Reserved
1F	Reserved

(b) SEGFLAG — Error Occurrence Retention Register

- This register sets the flags of error occurrence, that store each error occurrence status by factors. Those are not automatically cleared (return to 0).
- Writing to the register enables both setting and clearing.

Bit	15	14	13	12	11	10	9	8	7	6	5	4	3	2	1	0
	—	—	—	—	—	—	VPGF	VCRF	—	TCMF	ROMF	VCIF	—	ICCF	—	—
Value after reset	0	0	0	0	0	0	0	0	0	0	0	0	0	0	0	0
R/W	R	R	R	R	R	R	R/W	R/W	R	R/W	R/W	R/W	R	R/W	R	R

Table 3.75 SEGFLAG Register Contents

Bit Position	Bit Name	Function
15 to 10	Reserved	When read, the value after reset is read. When writing, write the value after reset.
9	VPGF	Flag corresponding to bit 9 of the SEGCONT register
8	VCRF	Flag corresponding to bit 8 of the SEGCONT register
7	Reserved	When read, the value after reset is read. When writing, write the value after reset.
6	TCMF	Flag corresponding to bit 6 of the SEGCONT register
5	ROMF	Flag corresponding to bit 5 of the SEGCONT register
4	VCIF	Flag corresponding to bit 4 of the SEGCONT register
3	Reserved	When read, the value after reset is read. When writing, write the value after reset.
2	ICCF	Flag corresponding to bit 2 of the SEGCONT register
1, 0	Reserved	When read, the value after reset is read. When writing, write the value after reset.

(c) SEGADDR — Error Factor Retention Register (Address)

This register records information of an error factor that notifies a SYSERR request (only one history is recorded). It records the addresses where the error factors for the VCIF, ROMF and TCMF bits of the SEGFLAG register were found. The error factors except VCIF, ROMF and TCMF bits of the SEGFLAG register to be recorded as $0000\ 0000_H$. This cannot be modified when the error occurrence flag to enable notification is set.

Bit	31	30	29	28	27	26	25	24	23	22	21	20	19	18	17	16
	Address[31:16]															
Value after reset	x	x	x	x	x	x	x	x	x	x	x	x	x	x	x	x
R/W	R/W*1	R/W*1	R/W*1	R/W*1	R/W*1	R/W*1	R/W*1	R/W*1	R/W*1	R/W*1	R/W*1	R/W*1	R/W*1	R/W*1	R/W*1	R/W*1

Bit	15	14	13	12	11	10	9	8	7	6	5	4	3	2	1	0
	Address[15:0]															
Value after reset	x	x	x	x	x	x	x	x	x	x	x	x	x	x	x	x
R/W	R/W*1	R/W*1	R/W*1	R/W*1	R/W*1	R/W*1	R/W*1	R/W*1	R/W*1	R/W*1	R/W*1	R/W*1	R/W*1	R/W*1	R/W*1	R/W*1

×: Undefined (retained)

Note 1. This cannot be modified when the error occurrence flag to enable notification is set.

Table 3.76 SEGADDR Register Contents

Bit Position	Bit Name	Function
31 to 0	Address[31:0]	These bits retain the address at which SYSERR source occurred. (If an error occurred by accessing to the local RAM area, the addresses of the 19 lower-order bits are retained and the addresses of the 13 higher-order bits are cleared to 0.)

(3) SEG Function

(a) SEG function: Notifying a SYSERR request due to an error flag

- Setting an error flag takes precedence over clearing the same flag.
  - Simultaneous clearing operation is ignored.
- Priority of error factors
  - The bit position of the notification-enabled SEGFLAG register becomes the priority of error factors. Error factors of lower bits take precedence over error factors of upper bits. Notification is made from the highest-priority error factor.
  - The bit position of error factors is notified as a "SYSERR factor code."
- Conditions for starting SYSERR request notification
  - Even if a notification-disabled flag is set to 1, notification is not made.
  - Notification is made immediately after a notification-enabled flag is set to 1.
  - After clearing, notification is made depending on the flag state (re-arbitration).
- Finishing notification at a SYSERR request response
  - Even after notification is finished, the flag is not cleared automatically.
  - Notification is not made until re-arbitration is performed by setting or clearing the flag.
  - If an error flag that is prioritized higher than the error factor is set prior to a request response, the notification information may be replaced with an upper SYSERR factor code.

(b) SEG function: Recording error factor information

- When notification-enabled error occurrence is input, the error address is retained in the above register.
  - No information is retained by setting or clearing an error flag described in "**(3) (a) SEG function: Notifying a SYSERR request due to an error flag**" above.
  - When multiple error occurrence inputs are present simultaneously, information other than the prioritized error factor is not retained.
- While the notification-enabled error flag described in "**(3) (a) SEG function: Notifying a SYSERR request due to an error flag**" above is set to 1, overwrite to the above register is inhibited
  - If error occurrence input continues, information of subsequent error factors is not retained.
  - To reset the inhibition of overwrite to the register, clear either SEGCONT or SEGFLAG register (or both of them).

(c) Supplementary information on SYSERR exception

- The PSW.EBV bit retains its value and the base address for the exception handler is not changed even when a SYSERR exception is generated.
- Detection of errors in the instruction cache
  Occurrence of an instruction cache error on the RAM the does not lead to a SYSERR exception of the type that requires re-execution by the origin of the instruction fetch. Execution of the instruction by the CPU still proceeds; the instruction cache automatically invalidates the entry which lead to the error and fetching is repeated, this time from the code flash memory. The SEG block will be informed that a cache error has occurred if the setting of the ICHEMK bit of the ICCTRL cache-control system register is 0. For instruction cache errors, see **(7), ICERR —**

Instruction Cache Error Register.

3.2.3.4 Checker Core

The CPU1 has the checker core for safety assurance, resulting in a highly reliable system. Monitoring the outputs from the CPU1 and the checker core with the comparator all the time enables immediate detection of the CPU1 abnormal operations. Duplication by the checker core covers the CPU core, FPU, MPU, PEG, IPG, SEG, and INTC1. The CPU1 can also conduct a fault diagnosis test of its own comparator through a pseudo-error generated by the COMPTEST module. For details of the COMPTEST module, see **Section 31.3, Lockstep** in **Section 31, Functional Safety**.

CAUTION

Reading of any register with an undefined value after a reset in a PE or writing to memory or a register outside the PE may cause a lock step comparison error. The values of some program registers and system registers are undefined after a reset, so pay attention to this when saving register values on the stack in RAM.

3.3 Processor Element Identifier

The PEID, each processor element ID number, can be read from the PEID field in the HTCFG0 register. Which CPU core performs a specific program can be understood by referring to the PEID. The following shows the PEID of this product.

CPU core	PEID
CPU1 (PE1)	001_B

3.4 Usage Notes

3.4.1 Synchronization of Store Instruction Completion and Subsequent Instruction Generation Execution

When a control register is updated by a store instruction, there is a time lag after the CPU executes the store instruction and before the control register is actually updated.

Therefore, if the updated content of the control register is to be used by the instruction following the store instruction, the appropriate synchronization is required.

How to perform synchronization processing is shown below.

For the procedures to synchronize updating system registers by LDSR instruction and the subsequent instruction execution, see *APPENDIX A. HAZARD RESOLUTION PROCEDURE FOR SYSTEM REGISTERS* in *the RH850G3M User's Manual: Software*.

When updated results in the control registers are reflected in the implementation of a subsequent instruction:

Example 1: an interrupt is enabled by implementation of an EI instruction after an interrupt request is cleared by access from the control register in the INTC2 and the peripheral circuits. Proceed as follows in this case.

(1) Store instruction to update a control register (ST.W, etc.)

(2) Dummy read of the above-mentioned control register (LD.W etc.)

(3) SYNCP

(4) Subsequent instruction (EI)

Example 2: Implement the same processing even when the access required after waiting to secure the updating of a given control register (register A) is to another control register (register B). This includes the following cases: the interlinked operation of different peripheral modules and when releasing the interrupt mask in INTC after making peripheral module settings. However, this processing is unnecessary if control registers A and B are in the same group of peripheral IP modules or control registers A and B are both in the CPU's own peripheral modules.

(1) Issue the instruction for storage to update control register A (TS.W, etc.)

(2) Dummy-read the above control register (LD.W, etc.)

(3) Issue SYNCP.

(4) Issue the instruction to access control register B (ST.W, LD.W, etc.)

The same processing is also required when access to control registers and memory within the scope of protection starts after waiting for the completion of settings for safety functions such as memory protection, ECC checking, and so on.

When the updated results of the control register or memory to be used in the instruction fetch of the subsequent instruction:

(a) In case of writing the instructions to the RAM before jumping to the RAM to execute instrunctions from the RAM, take the following procedure.

(1) Execute the store instruction to update a memory (ST.W, etc.).

(2) Perform a dummy read of the above memory (LD.W, etc.).

(3) Execute SYNCP.

(4) Execute SYNCI.

(5) Execute the subsequent instruction (branch instruction, etc.).

(b) In case of updating control registers for memory protection and ECC functions before jumping to the memory to be controlled by the registers, take the following procedure.

(1) Execute the store instruction to update a control register (ST.W, etc.).

(2) Perform a dummy read of the control register (LD.W, etc.).

(3) Execute SYNCP.

(4) Execute SYNCI.

(5) Execute the subsequent instruction (branch instruction, etc.).

When switching the code flash memory area:

In this case, see *Section 9, Usage Notes, (7) Updating the BFASELR register* in *the RH850/P1x Flash Memory User's Manual: Hardware Interface*.

3.4.2 Accesses to Registers by Bit-Manipulation Instructions

Processing of a bit-manipulation instruction takes the form of atomic reading, modification, and writing of an eight-bit unit. Therefore, registers which enable reading and writing in 8 bits can be basically accessed by bit-manipulation instructions. However, take care in the cases of registers that contain multiple flag bits, since the read-modify-write cycle may also clear flags other than that which was the target for clearing.

Write access to the FlexRay registers by using bit-manipulation instructions is not atomic. Access by other masters may interrupt the read-modify-write processing of these instructions.

3.4.3 Ensuring Coherency after Code Flash Programming

The CPU has an efficient instruction cache and data buffer for the code flash area.

Therefore, after using self-programming to program the code flash memory, clear the instruction cache and data buffer to ensure coherency. The instruction cache and data buffer can be cleared by using the ICCTRL register and the CDBCR register, respectively.

3.4.4 Overwriting Context when Acknowledging Multiple Exceptions

Exceptions may be acknowledged regardless of the states of the ID and NP bits of the PSW register. This depends on the type of exception. When multiple exceptions occur, the contents of the system registers which hold the context information are overwritten. Regarding the conditions for acknowledging exceptions from each source and the possibility of return and recovery, see the list of exception sources in *the RH850G3M User's Manual: Software*.

3.4.5 Usage Notes on Prefetching

CPU executes speculative instruction fetching from locations later than the current value of the program counter to maintain the throughput of instruction fetches. Reading from memory due to such

prefetching may proceed even from locations to which instruction codes have not been assigned (note 1 in **Figure 3.5**). Please note the following. The CPU does not execute values read in such cases.

These notes apply to instruction fetching from memory in general.

- Occurrence of ECC errors due to values in memory being undefined

  This prefetching may lead to an ECC error in case of reading from the code flash memory after it has been erased or from the local RAM before initialization. When instruction codes are assigned to memory, initialize said area with values as desired (note 1 in **Figure 3.5**).

- Detection of illegal access by the IPG

  The IPG may detect such prefetching as illegal access. To prevent prefetching being detected as an illegal access, do not allow any region of overlap area with said areas (note 1 in **Figure 3.5**) and areas to which access is prohibited by the IPG. Reading from an area protected by the MPU does not cause a memory protection exception.

- Access to Access Prohibited Area

  Assign instruction codes to memory without allowing any overlap between said area (note 1 in **Figure 3.5**) and an access-prohibited area.

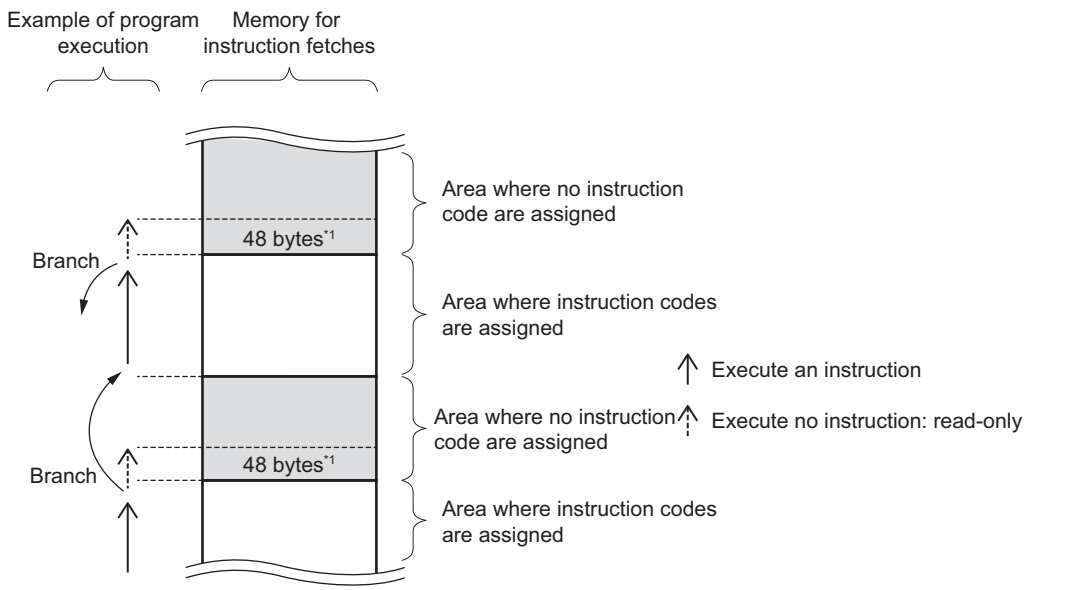

Note 1. Area from final address of instruction code to final address + 48 bytes. Even if instruction codes are not placed in this area, requests for prefetching may lead to reading from memory at the time of branching.

Figure 3.5 Area that Requires Attention Regarding Prefetching

3.4.6 Initialization of Register Set

For a register in the register set, which contains an undefined value after reset, write a value and then read it.

Table 3.77 Registers that Needs to be Initialized (System Registers)

Register Number	Register Name
SR0,0	EIPC
SR2,0	FEPC
SR16,0	CTPC
SR20,0	CTBP
SR28,0	EIWR
SR29,0	FEWR
SR3,1	EBASE
SR4,1	INTBP
SR11,1	SCCFG
SR12,1	SCBP
SR6,2	MEA
SR7,2	ASID
SR8,2	MEI
SR6,0	FPSR
SR7,0	FPEPC
SR8,0	FPST
SR9,0	FPCC
SR8,5	MCA
SR9,5	MCS
SR11,5	MCR

Register Number	Register Name
SR0,6	MPLA0
SR1,6	MPUA0
SR2,6	MPAT0
SR4,6	MPLA1
SR5,6	MPUA1
SR6,6	MPAT1
SR8,6	MPLA2
SR9,6	MPUA2
SR10,6	MPAT2
SR12,6	MPLA3
SR13,6	MPUA3
SR14,6	MPAT3
SR16,6	MPLA4
SR17,6	MPUA4
SR18,6	MPAT4
SR20,6	MPLA5
SR21,6	MPUA5
SR22,6	MPAT5
SR24,6	MPLA6
SR25,6	MPUA6
SR26,6	MPAT6
SR28,6	MPLA7
SR29,6	MPUA7
SR30,6	MPAT7

Register Number	Register Name
SR0,7	MPLA8
SR1,7	MPUA8
SR2,7	MPAT8
SR4,7	MPLA9
SR5,7	MPUA9
SR6,7	MPAT9
SR8,7	MPLA10
SR9,7	MPUA10
SR10,7	MPAT10
SR12,7	MPLA11
SR13,7	MPUA11
SR14,7	MPAT11
SR16,4	ICTAGL
SR17,4	ICTAGH
SR18,4	ICDATL
SR19,4	ICDATH
SR28,4	ICERR

Table 3.78 Registers that Needs to be Initialized (PEG-, IPG-, SEG-related)

Register Number
IPGECRUM
IPGADRUM
SEGADDR

3.4.7 Usage Note when Exception is Acknowledged

SYNCP instruction must be inserted in front of exception handler, depending on the exception sources. For the details, see *the RH850G3M User's Manual: Software*.

Section 4 Address Space

Table 4.1 shows the address space of the RH850/P1x.

CAUTION

When making an access to the on-chip I/O register space, access the addresses shown in this manual. Do not access an address that is reserved or not specified in this manual. Otherwise, operation is not guaranteed.

4.1 Address Space

Table 4.1 Address Space

Address	Address Space Type	Size
$0000\ 0000_H$ to *1 ($0001\ 7000_H$ to $0001\ 7FFF_H$)	Code Flash (user area) (FCU firmware area (Map is switched by the FCUFAREA register.))*3	512 KB/1 MB/2 MB (4 KB)
$0010\ 0000_H$ to $00FF\ FFFF_H$	Reserved	
$0100\ 0000_H$ to $0100\ 7FFF_H$	Code Flash (extended user area)	32 KB
$0100\ 8000_H$ to $0FFF\ FFFF_H$	Reserved	
$1000\ 0000_H$ to $1FFF\ FFFF_H$	On-chip I/O register	256 MB
$2000\ 0000_H$ to $FEBD\ FFFF_H$	Reserved	
*5 to $FEBF\ FFFF_H$	Local RAM (PE1 area)	128 KB/64 KB
$FEC0\ 0000_H$ to $FEDD\ FFFF_H$	Reserved	
*6 to $FEDF\ FFFF_H$	Local RAM (self*7)	128 KB/64 KB
$FEE0\ 0000_H$ to $FEFF\ FFFF_H$	Reserved	
$FF00\ 0000_H$ to $FFFD\ FFFF_H$ ($FF20\ 0000_H$ to *4) ($FFA1\ 2000_H$ to $FFA1\ 2FFF_H$)	On-chip I/O register (Data flash) (FCU RAM)	15 MB to 128 KB (32 KB/64 KB) (4 KB)
$FFFE\ 0000_H$ to $FFFE\ DFFF_H$	Reserved	
$FFFE\ E000_H$ to $FFFE\ FFFF_H$	On-chip I/O register (self*2)	8 KB
$FFFF\ 0000_H$ to $FFFF\ 4FFF_H$	Reserved	
$FFFF\ 5000_H$ to $FFFF\ FFFF_H$	On-chip I/O register	44 KB

Note 1. 512-KB device: $0007\ FFFF_H$, 1-MB device: $000F\ FFFF_H$, 2-MB device: $001F\ FFFF_H$

Note 2. Registers for the functions of the CPU's own peripherals (SEG, PEG, IPG, INTC1) are assigned to the on-chip I/O register area ("self"). It can only be accessed by CPU1 (PE1).

Note 3. For details, refer to *the RH850/P1x Flash Memory User's Manual: Hardware Interface*.

Note 4. 512-KB device: $FF20\ 7FFF_H$, 1-MB device: $FF20\ 7FFF_H$, 2-MB device: $FF20\ FFFF_H$

Note 5. 512-KB device: $FEBF\ 0000_H$, 1-MB device: $FEBE\ 0000_H$, 2-MB device: $FEBE\ 0000_H$

Note 6. 512-KB device: $FEDF\ 0000_H$, 1-MB device: $FEDE\ 0000_H$, 2-MB device: $FEDE\ 0000_H$

Note 7. The local RAM ("self") area is a mirror of the local RAM (PE1) area. It can only be accessed by CPU1 (PE1).

4.2 Address Space Viewed from Each Bus Master

Figure 4.1 shows address spaces viewed from each bus master.

4.2.1 Space in which instructions can be fetched

1. Instructions of PE1 can be fetched from the code flash, and the local RAM.
2. The reset vector (RBASE Value after Reset) of PE1:
   - For a startup from user area, its head address is $0000\ 0000_H$.
   - For a startup from the extended user area, its head address is $0100\ \ 0000_H$.

4.2.2 Data space accessible by PE1

All spaces are accessible.

4.2.3 Data space accessible by DMA (DMAC, DTS)

See **Figure 4.1** for the accessible spaces from the DMA.

4.2.4 Data space accessible by H-Bus master

See **Figure 4.1** for the accessible spaces from the H-Bus.

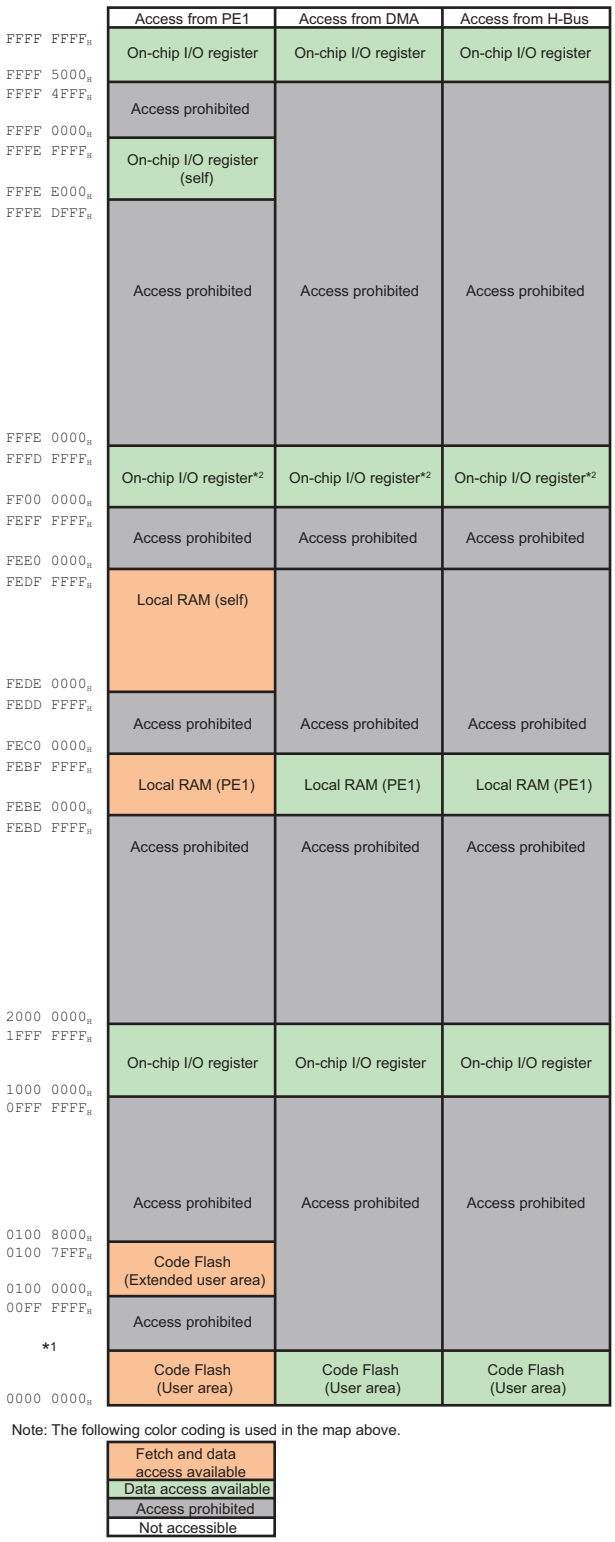

Note 1. The capacity of the code flash differs between products. For details, see **Section 4.1, Address Space**.

Note 2. This on-chip I/O register includes data flash and FCU RAM. For details, see **Section 4.1, Address Space**.

Figure 4.1 Address Space Viewed from Each Bus Master

4.3 Write-Protected Registers

This section contains a generic description of the write-protected registers.

The first part in this section describes the features specific to the write-protected registers, and the ensuing sections describe the various registers.

4.3.1 Overview

4.3.1.1 Functional Overview

The RH850/P1x products require a special procedure using write-protected registers for setting important registers that affect the system, such as clock, reset, and port-related registers. The settings of protected registers are protected against illegal writing by programs by requiring a special procedure.

For details about the protected registers, see **Section 4.3.1.5, Write-Protection Target Registers**. Write-protected registers manage the write-protection target registers in units of modules.

4.3.1.2 Write Procedure to Write-Protected Registers

Write access to a write-protected register is enabled by using the following write sequence:

1. Write the fixed value 0000 $00A5_H$ to the protection command register.
2. Write the desired value to the protected register.
3. Write the inverse of the desired bit value to the protected register.
   Write the inverse of the desired bit value to the reserved bits of the protected register.
4. Write the desired value (Same value of step 2.) to the protected register.
5. Verify that the desired value has been written to the protected register.
   Verify successful write of the desired value to the protected register by verifying that the error monitor bit in the write sequence status register is “0”.
   In case the write was not successful, indicated by the error monitor bit set to “1”, the entire sequence has to be restarted from step 1.

In case of any write access to a different register during step 1 to step 4 of the above sequence, the protection mechanism behaves as follows. (The same mechanism takes place when an interrupt is accepted during write sequence and write access to a different register is made during interrupt processing.)

- When write access to a different register is made in the same module, the write to the write-protection target register fails and the error monitor bit is set to 1.
- When write access to a register in another module is made, the write to the write protection register can be completed successfully.

For read access to a register in the same module or a register in a different module is made, the write sequence does not fail.

NOTE

A different register in the same module is a register in the same module category as that of protection command registers, sequence status registers, and write protection target registers. For the registers and modules, see the module category in **Table 4.2, Write-Protection Target Registers**, and **Appendix A., List of Registers**.

4.3.1.3 Interrupt during Write Sequence

If an interrupt is generated during the write sequence, the protection mechanism operates as follows:

(1) If an interrupt request is accepted during the write sequence and write access to a register of the same module is made:

The write sequence is suspended, so the write operation to the protected register cannot be completed upon return from the interrupt service routine. **Figure 4.2** shows an execution example.

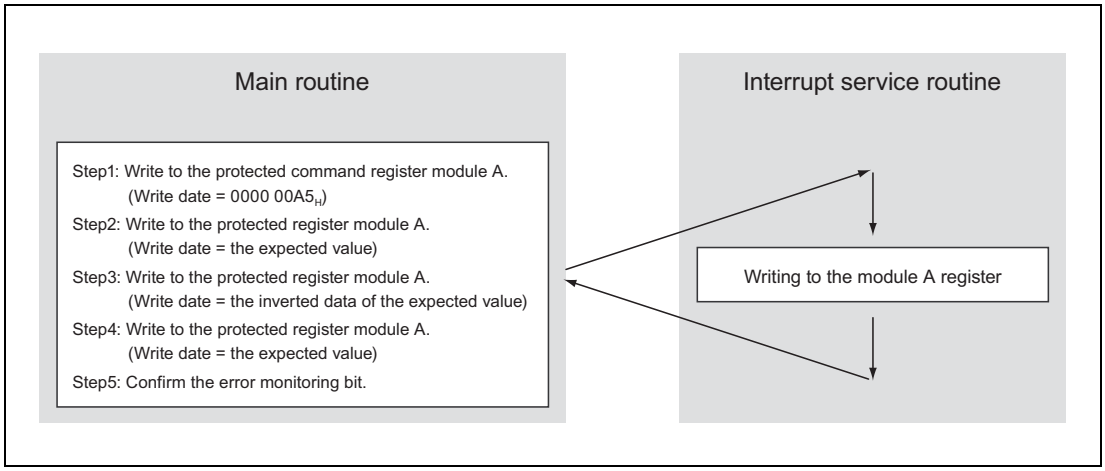

Figure 4.2 Example of Suspended Write Sequence

(2) If an interrupt request is accepted during the write sequence and write access to a register of a different module is made.

The write sequence is not suspended, and the write operation to the protected register is completed upon return from the interrupt service routine. **Figure 4.3** shows an execution example.

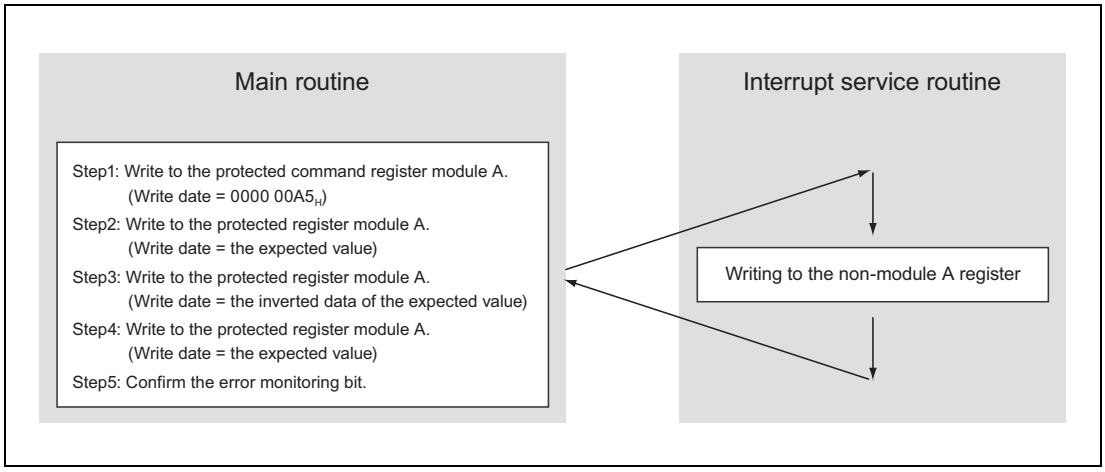

Figure 4.3 Example of Successful Write Sequence

For the write protection target registers of the RH850/P1x, see **Section 4.3.1.5, Write-Protection Target Registers**.

4.3.1.4 Emulation Break during Write Sequence

If an emulation break occurs during the above write sequence, e.g. because of a breakpoint hit, the register protection is suspended until normal operation is resumed. Even if any register of the same module is accessed during the break, the write sequence is not suspended and the error monitor bit is not set to 1.

4.3.1.5 Write-Protection Target Registers

The registers that are protected through the write-protected registers are listed below.

Table 4.2 Write-Protection Target Registers (1/3)

Module Category	Register to be Protected	Protection Register	
		Command Register	Status Register
PORT, PORTJ	JPODC0	JPPCMD0	JPPROTS0
	JPDSC0		
	JPUCC0		
	PODC0	PPCMD0	PPROTS0
	PDSC0		
	PODCE0		
	PUCC0		
	PINV0		
	PODC1	PPCMD1	PPROTS1
	PDSC1		
	PODCE1		
	PUCC1		
	PINV1		
	PODC2	PPCMD2	PPROTS2
	PDSC2		
	PODCE2		
	PUCC2		
	PINV2		
	PODC3	PPCMD3	PPROTS3
	PDSC3		
	PODCE3		
	PUCC3		
	PINV3		
	PODC4	PPCMD4	PPROTS4
	PDSC4		
	PODCE4		
	PUCC4		
	PINV4		

Table 4.2 Write-Protection Target Registers (2/3)

Module Category	Register to be Protected	Protection Register	
		Command Register	Status Register
PORT, PORTJ	PODC5	PPCMD5	PPROTS5
	PDSC5		
	PODCE5		
	PUCC5		
	PINV5		
SYS*1	CVMFC	PROTCMDCVM	PROTSCVM
	CVMDIAG		
	CVMDMASK		
	CVMDEW		
	CVMREN		
SYS*2, CLMAC (CLMA0 to CLMA3 are also for the same modules)	LVICNT	PROT1PHCMD	PROT1PS
	SWRESA		
	CKSC0CTL		
	CKSC1CTL		
	ADCKSC0CTL		
	BSEQ0CTL		
	CLMATEST		
CLMA0	CLMA0CTL0	CLMA0PCMD	CLMA0PS
CLMA1	CLMA1CTL0	CLMA1PCMD	CLMA1PS
CLMA2	CLMA2CTL0	CLMA2PCMD	CLMA2PS
CLMA3	CLMA3CTL0	CLMA3PCMD	CLMA3PS
ECMM (ECM is also for the same modules)	ECMMESET	ECMMPCMD0 or ECMPCMD1	ECMPS
	ECMMECLR		
ECMC (ECM is also for the same modules)	ECMCESET	ECMCPCMD0 or ECMPCMD1	
	ECMCECLR		
ECM (ECMM and ECMC are also for the same modules)	ECMEPCFG	ECMPCMD1	
	ECMMICFG0		
	ECMMICFG1		
	ECMNMICFG0		
	ECMNMICFG1		
	ECMIRCFG0		
	ECMIRCFG1		
	ECMEMK0		
	ECMEMK1		
	ECMESSTC0		
	ECMESSTC1		
	ECMPE0		
	ECMPE1		
	ECMDTMCTL		
	ECMDTMCMP		

Table 4.2 Write-Protection Target Registers (3/3)

Module Category	Register to be Protected	Protection Register	
		Command Register	Status Register
ECM (ECMM and ECMC are also for the same modules)	ECMDTMCFG0	ECMPCMD1	ECMPS
	ECMDTMCFG1		
	ECMDTMCFG2		
	ECMDTMCFG3		
FLMD	FLMDCNT	FLMDPCMD	FLMDPS

Note 1. This is for the following function and address range.
Core voltage monitor (CVM): FFF8 2820_H to FFF8 2843_H

Note 2. This is for the following functions and address range.
Low-voltage detection circuit (LVI): FFF8 $2C00_H$ to FFF8 $2C03_H$
Clock controller: FFF8 9080_H to FFF8 9087_H, FFF8 $90C0_H$ to FFF8 $90C7_H$, FFF8 9200_H to FFF8 9207_H
BIST: FFF8 $A440_H$ to FFF8 $A443_H$
Reset: FFF8 $AC10_H$ to FFF8 $AC1B_H$

4.3.2 Registers

4.3.2.1 List of Registers

The following table lists the write-protected registers.

Table 4.3 List of Write-Protected Registers

Write-Protection Register	Symbol	Address
Port:		
Write-Protection Command Register	PPCMD0	FFC1 4030H
	PPCMD1	FFC1 4070H
	PPCMD2	FFC1 40B0H
	PPCMD3	FFC1 40F0H
	PPCMD4	FFC1 4130H
	PPCMD5	FFC1 4170H
	JPPCMD0	FFC2 4030H
Write Sequence Status Register	PPROTS0	FFC1 4034H
	PPROTS1	FFC1 4074H
	PPROTS2	FFC1 40B4H
	PPROTS3	FFC1 40F4H
	PPROTS4	FFC1 4134H
	PPROTS5	FFC1 4174H
	JPPROTS0	FFC2 4034H
CVM:		
Write-Protection Command Register	PROTCMDCVM	FFF8 3010H
Write Sequence Status Register	PROTSCVM	FFF8 3014H
LVI / Reset / Clock Controller / BIST:		
Write-Protection Command Register	PROT1PHCMD	FFF8 B000H
Write Sequence Status Register	PROT1PS	FFF8 B004H
Clock Monitor:		
Write-Protection Command Register	CLMA0PCMD	FFF8 8410H
	CLMA1PCMD	FFF8 8430H
	CLMA2PCMD	FFF8 8450H
	CLMA3PCMD	FFF8 8470H
Write Sequence Status Register	CLMA0PS	FFF8 8414H
	CLMA1PS	FFF8 8434H
	CLMA2PS	FFF8 8454H
	CLMA3PS	FFF8 8474H
ECM:		
ECM Master Write-Protection Command Register	ECMMPCMD0	FFD6 0010H
ECM Checker Write Sequence Status Register	ECMCPCMD0	FFD6 1010H
ECM Write-Protection Command Register	ECMPCMD1	FFD6 202CH
ECM Write Sequence Status Register	ECMPS	FFD6 2030H
Flash Memory:		
FLMD Write-Protection Command Register	FLMDPCMD	FFA0 0004H
FLMD Write Sequence Status Register	FLMDPS	FFA0 0008H

4.3.2.2 Port Register Protection

(1) PPCMDn/JPPCMD0 — Write-Protection Command Register

This register is a command register to write to the register to be protected.

For write-protection target registers, see **Table 4.2, Write-Protection Target Registers**.

The number of valid bit positions (the value n) depends on the number of pins included in each device. See the list of registers by group (**Table 2.36, List of Registers in Port Group 0**, **Table 2.37, List of Registers in Port Group 1**, **Table 2.38, List of Registers in Port Group 2**, **Table 2.39, List of Registers in Port Group 3**, **Table 2.40, List of Registers in Port Group 4**,**Table 2.41, List of Registers in Port Group 5**, **Table 2.42, List of Registers in Port Group JP0**) in **Section 2.4.1.1, List of Port Registers**.

Access: This register can only be written in 32-bit units.

Address: PPCMD0: FFC1 4030_H
PPCMD1: FFC1 4070_H
PPCMD2: FFC1 $40B0_H$
PPCMD3: FFC1 $40F0_H$
PPCMD4: FFC1 4130_H
PPCMD5: FFC1 4170_H
JPPCMD0: FFC2 4030_H

Value after reset: $0000\ 0000_H$
This register is initialized by any reset source.

Bit	31	30	29	28	27	26	25	24	23	22	21	20	19	18	17	16
	—	—	—	—	—	—	—	—	—	—	—	—	—	—	—	—
Value after reset	0	0	0	0	0	0	0	0	0	0	0	0	0	0	0	0
R/W	R	R	R	R	R	R	R	R	R	R	R	R	R	R	R	R

Bit	15	14	13	12	11	10	9	8	7	6	5	4	3	2	1	0
	—	—	—	—	—	—	—	—	PCMDn[7:0]							
Value after reset	0	0	0	0	0	0	0	0	0	0	0	0	0	0	0	0
R/W	R	R	R	R	R	R	R	R	W	W	W	W	W	W	W	W

Table 4.4 PPCMDn Register Contents

Bit Position	Bit Name	Function
31 to 8	Reserved	When writing, write the value after reset.
7 to 0	PCMDn[7:0]	Protection command that enables writing to write-protection target registers.

NOTE

For details about the relevant port groups and bits, see **Section 2.4.1.1, List of Port Registers**.

(2) PPROTSn/JPPROTS0 — Write Sequence Status Register

This register indicates the status of write sequence of the write-protection target registers.

For write-protection target registers, see **Table 4.2, Write-Protection Target Registers**.

The number of valid bit positions (the value n) depends on the number of pins included in each device. See the list of registers by group (**Table 2.36, List of Registers in Port Group 0**, **Table 2.37, List of Registers in Port Group 1**, **Table 2.38, List of Registers in Port Group 2**, **Table 2.39, List of Registers in Port Group 3**, **Table 2.40, List of Registers in Port Group 4**,**Table 2.41, List of Registers in Port Group 5**, **Table 2.42, List of Registers in Port Group JP0**) in **Section 2.4.1.1, List of Port Registers**.

Access: This register can only be read in 32-bit units.
Writing to this register is ignored.

Address: PPROTS0: FFC1 4034_H
PPROTS1: FFC1 4074_H
PPROTS2: FFC1 $40B4_H$
PPROTS3: FFC1 $40F4_H$
PPROTS4: FFC1 4134_H
PPROTS5: FFC1 4174_H
JPPROTS0: FFC2 4034_H

Value after reset: $0000\ 0000_H$
This register is initialized by any reset source.

Bit	31	30	29	28	27	26	25	24	23	22	21	20	19	18	17	16
	—	—	—	—	—	—	—	—	—	—	—	—	—	—	—	—
Value after reset	0	0	0	0	0	0	0	0	0	0	0	0	0	0	0	0
R/W	R	R	R	R	R	R	R	R	R	R	R	R	R	R	R	R

Bit	15	14	13	12	11	10	9	8	7	6	5	4	3	2	1	0
	—	—	—	—	—	—	—	—	—	—	—	—	—	—	—	PPROT Sn_0
Value after reset	0	0	0	0	0	0	0	0	0	0	0	0	0	0	0	0
R/W	R	R	R	R	R	R	R	R	R	R	R	R	R	R	R	R

Table 4.5 PPROTSn Register Contents

Bit Position	Bit Name	Function
31 to 1	Reserved	When read, the value after reset is read.
0	PPROTSn_0	Write Sequence Error Monitor 0: Protection error does not occur. 1: Protection error occurs.

NOTE

For details about the relevant port groups and bits, see **Section 2.4.1.1, List of Port Registers**.

4.3.2.3 Core Voltage Monitor (CVM) Register Protection

(1) PROTCMDCVM — Write Protection Command Register

This register is used to write to write-protection target registers.

For write-protection target registers, see **Table 4.2, Write-Protection Target Registers**.

Access: This register can only be written in 32-bit units.

Address: FFF8 3010_H

Value after reset: $0000\ 0000_H$
This register is initialized by any reset source.

Bit	31	30	29	28	27	26	25	24	23	22	21	20	19	18	17	16
	—	—	—	—	—	—	—	—	—	—	—	—	—	—	—	—
Value after reset	0	0	0	0	0	0	0	0	0	0	0	0	0	0	0	0
R/W	R	R	R	R	R	R	R	R	R	R	R	R	R	R	R	R

Bit	15	14	13	12	11	10	9	8	7	6	5	4	3	2	1	0
	—	—	—	—	—	—	—	—	PCMD[7:0]							
Value after reset	0	0	0	0	0	0	0	0	0	0	0	0	0	0	0	0
R/W	R	R	R	R	R	R	R	R	W	W	W	W	W	W	W	W

Table 4.6 PROTCMDCVM Register Contents

Bit Position	Bit Name	Function
31 to 8	Reserved	When writing, write the value after reset.
7 to 0	PCMD[7:0]	Protection command that enables writing to write-protection target registers.

(2) PROTSCVM — Write Sequence Status Register

This register is used to indicate the status of write sequence of the write-protection target registers.

For write-protection target registers, see **Table 4.2, Write-Protection Target Registers**.

Access: This register can only be read in 32-bit units.

Address: FFF8 3014_H

Value after reset: $0000\ 0000_H$
This register is initialized by any reset source.

Bit	31	30	29	28	27	26	25	24	23	22	21	20	19	18	17	16
	—	—	—	—	—	—	—	—	—	—	—	—	—	—	—	—
Value after reset	0	0	0	0	0	0	0	0	0	0	0	0	0	0	0	0
R/W	R	R	R	R	R	R	R	R	R	R	R	R	R	R	R	R

Bit	15	14	13	12	11	10	9	8	7	6	5	4	3	2	1	0
	—	—	—	—	—	—	—	—	—	—	—	—	—	—	—	PROTERR
Value after reset	0	0	0	0	0	0	0	0	0	0	0	0	0	0	0	0
R/W	R	R	R	R	R	R	R	R	R	R	R	R	R	R	R	R

Table 4.7 PROTSCVM Register Contents

Bit Position	Bit Name	Function
31 to 1	Reserved	When read, the value after reset is read.
0	PROTERR	Write Sequence Error Monitor 0: A protection error does not occur. 1: A protection error occurs.

4.3.2.4 LVI/Reset/Clock Controller/BIST Register Protection

(1) PROT1PHCMD — Write Protection Command Register

This register is used as a command register to write to write-protection target registers.

For write-protection target registers, see **Table 4.2, Write-Protection Target Registers**.

Access: This register can only be written in 32-bit units.

Address: FFF8 B000$_H$

Value after reset: 0000 0000$_H$
This register is initialized by any reset source.

Bit	31	30	29	28	27	26	25	24	23	22	21	20	19	18	17	16
	—	—	—	—	—	—	—	—	—	—	—	—	—	—	—	—
Value after reset	0	0	0	0	0	0	0	0	0	0	0	0	0	0	0	0
R/W	R	R	R	R	R	R	R	R	R	R	R	R	R	R	R	R

Bit	15	14	13	12	11	10	9	8	7	6	5	4	3	2	1	0
	—	—	—	—	—	—	—	—	PCMD[7:0]							
Value after reset	0	0	0	0	0	0	0	0	0	0	0	0	0	0	0	0
R/W	R	R	R	R	R	R	R	R	W	W	W	W	W	W	W	W

Table 4.8 PROT1PHCMD Register Contents

Bit Position	Bit Name	Function
31 to 8	Reserved	When writing, write the value after reset.
7 to 0	PCMD[7:0]	Protection command that enables writing to write-protection target registers.

(2) PROT1PS — Write Sequence Status Register

This register is used to indicate the status of write sequence of the write-protection target registers.

For write-protection target registers, see **Table 4.2, Write-Protection Target Registers**.

Access: This register can only be read in 32-bit units.

Address: FFF8 B004$_H$

Value after reset: 0000 0000$_H$
This register is initialized by any reset source.

Bit	31	30	29	28	27	26	25	24	23	22	21	20	19	18	17	16
	—	—	—	—	—	—	—	—	—	—	—	—	—	—	—	—
Value after reset	0	0	0	0	0	0	0	0	0	0	0	0	0	0	0	0
R/W	R	R	R	R	R	R	R	R	R	R	R	R	R	R	R	R

Bit	15	14	13	12	11	10	9	8	7	6	5	4	3	2	1	0
	—	—	—	—	—	—	—	—	—	—	—	—	—	—	—	PROTERR
Value after reset	0	0	0	0	0	0	0	0	0	0	0	0	0	0	0	0
R/W	R	R	R	R	R	R	R	R	R	R	R	R	R	R	R	R

Table 4.9 PROT1PS Register Contents

Bit Position	Bit Name	Function
31 to 1	Reserved	When read, the value after reset is read.
0	PROTERR	Write Sequence Error Monitor 0: A protection error does not occur. 1: A protection error does occur.

4.3.2.5 Clock Monitor Register Protection

(1) CLMAnPCMD — CLMAn Write Protection Command Register

This register is used as a command register to write to the write-protection target registers.

For write-protection target registers, see **Table 4.2, Write-Protection Target Registers**.

CLMAn represents the channels of the clock monitor. The value n is the channel number.

Access: This register can only be written in 8-bit units.

Address: CLMA0PCMD: FFF8 8410_H
CLMA1PCMD: FFF8 8430_H
CLMA2PCMD: FFF8 8450_H
CLMA3PCMD: FFF8 8470_H

Value after reset: 00_H
This register is initialized by any reset source.

Bit	7	6	5	4	3	2	1	0
	CLMAnPCMD[7:0]							
Value after reset	0	0	0	0	0	0	0	0
R/W	W	W	W	W	W	W	W	W

Table 4.10 CLMAnPCMD Register Contents

Bit Position	Bit Name	Function
7 to 0	CLMAnPCMD[7:0]	Protection command that enables writing to write-protection target registers.

(2) CLMAnPS — CLMAn Write Sequence Status Register

This register is used to indicate the status of write sequence of the write-protection target registers.

For write-protection target registers, see **Table 4.2, Write-Protection Target Registers**.

CLMAn represents the channels of the clock monitor. The value n is the channel number.

Access: This register can only be read in 8-bit units.

Address: CLMA0PS: FFF8 8414$_H$
CLMA1PS: FFF8 8434$_H$
CLMA2PS: FFF8 8454$_H$
CLMA3PS: FFF8 8474$_H$

Value after reset: 00$_H$
This register is initialized by any reset source.

Bit	7	6	5	4	3	2	1	0
	—	—	—	—	—	—	—	CLMAnPRERR
Value after reset	0	0	0	0	0	0	0	0
R/W	R	R	R	R	R	R	R	R

Table 4.11 CLMAnPS Register Contents

Bit Position	Bit Name	Function
7 to 1	Reserved	When read, the value after reset is read.
0	PCMD[7:0]	Write Sequence Error Monitor 0: A protection error does not occur. 1: A protection error does occur.

4.3.2.6 Error Control Module (ECM) Register Protection

(1) ECMmPCMD0 — ECM Master/Checker Write-Protection Command Register (m = M/C)

This register is used as a command register to write to write-protection target registers.

For write-protection target registers, see **Table 4.2, Write-Protection Target Registers**.

Access: This register can only be written in 32-bit units.

Address: ECMMPCMD0: FFD6 0010_H
ECMCPCMD0: FFD6 1010_H

Value after reset: Undefined

Bit	31	30	29	28	27	26	25	24	23	22	21	20	19	18	17	16
	—	—	—	—	—	—	—	—	—	—	—	—	—	—	—	—
Value after reset	Undefined															
R/W	R	R	R	R	R	R	R	R	R	R	R	R	R	R	R	R

Bit	15	14	13	12	11	10	9	8	7	6	5	4	3	2	1	0
	—	—	—	—	—	—	—	—	ECMmREG0[7:0]							
Value after reset	Undefined															
R/W	R	R	R	R	R	R	R	R	W	W	W	W	W	W	W	W

Table 4.12 ECMmPCMD0 Register Contents

Bit Position	Bit Name	Function
31 to 8	Reserved	When writing, write 0.
7 to 0	ECMmREG0[7:0]	Protection command that enables writing to write-protection target registers.

(2) ECMPCMD1 — ECM Write Protection Command Register

This register is used as a command register to write to write-protection target registers.

For write-protection target registers, see **Table 4.2, Write-Protection Target Registers**.

Access: This register can only be written in 32-bit units.

Address: FFD6 202C$_H$

Value after reset: Undefined

Bit	31	30	29	28	27	26	25	24	23	22	21	20	19	18	17	16
	—	—	—	—	—	—	—	—	—	—	—	—	—	—	—	—
Value after reset	Undefined															
R/W	R	R	R	R	R	R	R	R	R	R	R	R	R	R	R	R

Bit	15	14	13	12	11	10	9	8	7	6	5	4	3	2	1	0
	—	—	—	—	—	—	—	—	ECMREG1[7:0]							
Value after reset	Undefined															
R/W	R	R	R	R	R	R	R	R	W	W	W	W	W	W	W	W

Table 4.13 ECMPCMD1 Register Contents

Bit Position	Bit Name	Function
31 to 8	Reserved	When writing, write 0.
7 to 0	ECMREG1[7:0]	Protection command that enables writing to write-protection target registers.

(3) ECMPS — ECM Write Sequence Status Register

This register is used to indicate the status of write sequence of the write-protection target registers.

For write-protection target registers, see **Table 4.2, Write-Protection Target Registers**.

Access: This register can be read in 8-bit units.

Address: FFD6 2030$_H$

Value after reset: 00$_H$
This register is initialized by any reset source.

Bit	7	6	5	4	3	2	1	0
	—	—	—	—	—	—	—	ECMPRERR
Value after reset	0	0	0	0	0	0	0	0
R/W	R	R	R	R	R	R	R	R

Table 4.14 ECMPS Register Contents

Bit Position	Bit Name	Function
7 to 1	Reserved	When read, the value after reset is read.
0	ECMPRERR	Write Sequence Error Monitor 0: A protection error does not occur. 1: A protection error does occur.

4.3.2.7 FLMDCNT Register Protection

(1) FLMDPCMD — FLMD Write Protection Command Register

This register is used as a command register to write to write-protection target registers.

For write-protection target registers, see **Table 4.2**.

Access: This register can only be written in 32-bit units.

Address: FFA0 0004_H

Value after reset: $0000\ 0000_H$
This register is initialized by any reset source.

Bit	31	30	29	28	27	26	25	24	23	22	21	20	19	18	17	16
	—	—	—	—	—	—	—	—	—	—	—	—	—	—	—	—
Value after reset	0	0	0	0	0	0	0	0	0	0	0	0	0	0	0	0
R/W	R	R	R	R	R	R	R	R	R	R	R	R	R	R	R	R

Bit	15	14	13	12	11	10	9	8	7	6	5	4	3	2	1	0
	—	—	—	—	—	—	—	—	FLMDPC[7:0]							
Value after reset	0	0	0	0	0	0	0	0	0	0	0	0	0	0	0	0
R/W	R	R	R	R	R	R	R	R	W	W	W	W	W	W	W	W

Table 4.15 FLMDPCMD Register Contents

Bit Position	Bit Name	Function
31 to 8	Reserved	When writing, write 0.
7 to 0	FLMDPC[7:0]	Protection command that enables writing to write-protection target registers.

(2) FLMDPS — FLMD Write Sequence Status Register

This register is used to indicate the status of write sequence of the write-protection target registers.

For write-protection target registers, see **Table 4.2, Write-Protection Target Registers**.

Access: This register can only be read in 32-bit units.

Address: FFA0 0008_H

Value after reset: $0000\ 0000_H$

Bit	31	30	29	28	27	26	25	24	23	22	21	20	19	18	17	16
	—	—	—	—	—	—	—	—	—	—	—	—	—	—	—	—
Value after reset	0	0	0	0	0	0	0	0	0	0	0	0	0	0	0	0
R/W	R	R	R	R	R	R	R	R	R	R	R	R	R	R	R	R

Bit	15	14	13	12	11	10	9	8	7	6	5	4	3	2	1	0
	—	—	—	—	—	—	—	—	—	—	—	—	—	—	—	FLMDP RERR
Value after reset	0	0	0	0	0	0	0	0	0	0	0	0	0	0	0	0
R/W	R	R	R	R	R	R	R	R	R	R	R	R	R	R	R	R

Table 4.16 FLMDPS Register Contents

Bit Position	Bit Name	Function
31 to 1	Reserved	When read, the value after reset is read.
0	FLMDPRERR	Write Sequence Error Monitor 0: A protection error does not occur. 1: A protection error does occur.

Section 5 Operating Modes

This section describes the operating mode and mode selection of the RH850/P1x.

The RH850/P1x has the operating modes as shown below.

5.1 Operating Modes

- Normal operating mode

  This mode is for execution of the user program. The on-chip debug capabilities also use this mode. If FLMD0 is pulled up to high level while the operation is in this mode, writing to the code flash memory through self-programming is enabled.

- Serial programming mode

  The dedicated flash memory programmer enables erasing/writing to the flash memory.

When an pin reset is cancelled, RH850/P1x latches the state of the FLMD0 and FLMD1 pins and decides the operating mode after the reset is canceled. **Table 5.1** lists the relationship between the pin settings and the operating mode.

Table 5.1 Selection of Operating Modes

Pins		Operating Mode
FLMD0	FLMD1 (P3_14)	
0	x	Normal operation mode
1	0	Serial programming mode
Other than above		Settings are prohibited

5.2 Register Specifications

5.2.1 List of Registers

A list of registers is shown in the table below.

Table 5.2 List of Registers

Register Name	Symbol	R/W	Value after Reset	Address
Operating mode indicating register	MODER	R	Undefined	FFCD $13F4_H$

5.2.2 MODER — Operating Mode Indicating Register

The operating modes of this device are shown below.

Access: This register can only be read in 8-bit units.

Address: FFCD $13F4_H$

Value after reset: Undefined

Bit	7	6	5	4	3	2	1	0
	—	—	—	—	MODE[3:0]			
Value after reset	—	—	—	—	—	—	—	—
R/W	R	R	R	R	R	R	R	R

Table 5.3 MODER Register Contents

Bit Position	Bit Name	Function
7 to 4	Reserved	When read, an undefined value is read.
3 to 0	MODE[3:0]	0011: Normal operation mode

Section 6 Interrupt

The interrupt controller (INTC) determines priority of interrupt sources and controls interrupt requests to the CPU. The INTC has a register to set priority of each interrupt. Interrupt requests are processed according to the priority set in this register by the user.

6.1 Overview

- Interrupt sources
  - One non-maskable interrupt (FENMI): FE level interrupt from ECM
  - One FE level maskable interrupt (FEINT): Pin NMI, OSTM3 to OSTM7
  - 384 EI level maskable interrupts (EIINT)
    32 high-speed interrupts
    - DMAC
    - ECM
    - Window watchdog timer
    352 low-speed interrupts
    - Timer
    - Communication
    - External interrupt
    - A/D interrupts
    - DTS
    - Flash

For details of FENMI, FEINT, and EIINT, refer to *the RH850G3M User's Manual: Software*.

- Sixteen interrupt priority levels can be set for the EI level interrupts.
  Up to 16 priority levels of the EI level interrupts can be set in EI level interrupt control registers.
- Three detection methods
  A method of detecting the pin NMI interrupt and external interrupt can be selected from rising edge, falling edge, and both edges.
- Direct branching method or table referencing method is selectable by setting two types of interrupt handler address setting registers.
- Software interrupts
  Interrupts of desired priority can be generated from the program by setting software interrupt registers.

6.1.1 Reset Sources

INTC reset sources are listed in the following table. INTC is initialized by these reset sources.

Table 6.1 Reset Sources

Unit Name	Reset Sources
INTC	Reset controller SYSRES

6.2 Register Specifications

The INTC has registers listed in tables below. These registers are mainly used to set interrupt priority and to control detection of external interrupt input signals.

6.2.1 Register Configuration

Table 6.2 Interrupt Control

Address	Register Symbol	Register Name	R/W	Value after Reset	Access Size
FFFE $EA00_H$ - FFFE $EA3E_H$ (EIC0 to EIC31) FFFF $B040_H$ - FFFF $B2FE_H$ (EIC32 to EIC383)	EICn*1	EI level interrupt control register	R/W	$008F_H$*4 $808F_H$*5	1/8/16
FFFE $EAF0_H$ (IMR0) FFFF $B404_H$ - FFFF $B42C_H$ (IMR1 to IMR11)	IMRn*2	EI level interrupt mask register	R/W	FFFF $FFFF_H$	1/8/16/32
FFFE $EB00_H$ - FFFE $EB7C_H$ (EIBD0 to EIBD31) FFFF $B880_H$ - FFFF $BDFC_H$ (EIBD32 to EIBD383)	EIBDn*3	EI level interrupt bind register	R/W	$0000\ 0001_H$	32
FFFE $EA78_H$	FNC	FE level NMI control register	R	0000_H	1/8/16
FFFE $EA7A_H$	FIC	FE level interrupt control register	R	0000_H	1/8/16
FFD6 7000_H	FEINTF	FEINT factor register	R	$0000\ 0000_H$	32
FFD6 7008_H	FEINTFC	FEINT factor clear register	W	$0000\ 0000_H$	32

Note 1. n = 0 to 383
Note 2. n = 0 to 11
Note 3. n = 0 to 383
Note 4. Synchronous edge detection
Note 5. High-level detection

Among the registers shown in **Table 6.2**, the EIC0 to 31, IMR0, EIBD0 to 31, FNC, and FIC are located in INTC1 of the CPU-specific Peripheral. Each of these registers only can be accessed from the CPU which includes it. Writing is only possible in supervisor mode (PSW.UM = 0).

Of the registers listed in **Table 6.2**, EIC32 to EIC383, IMR1 to IMR11, and EIBD32 to EIBD383 are located in INTC2, the controller for interrupts from peripheral IP group 0. Writing to these registers is only possible for CPU1 in supervisor mode (PSW.UM = 0).

Table 6.3 Software Interrupts

Address	Register Symbol	Register Name	R/W	Value after Reset	Access Size
FFC0 0000_H	SINTR0	Software interrupt register 0	R/W	00_H	8
FFC0 0004_H	SINTR1	Software interrupt register 1	R/W	00_H	8
FFC0 0008_H	SINTR2	Software interrupt register 2	R/W	00_H	8
FFC0 $000C_H$	SINTR3	Software interrupt register 3	R/W	00_H	8
FFC0 0010_H	SINTR4	Software interrupt register 4	R/W	00_H	8

Table 6.4 Interrupt Merge Function

Address	Register Symbol	Register Name	R/W	Value after Reset	Access Size
FFF9 8000_H	PINT0	Peripheral interrupt status register 0	R	0000 0000_H	32
FFF9 8004_H	PINT1	Peripheral interrupt status register 1	R	0000 0000_H	32
FFF9 8008_H	PINT2	Peripheral interrupt status register 2	R	0000 0000_H	32
FFF9 $800C_H$	PINT3	Peripheral interrupt status register 3	R	0000 0000_H	32
FFF9 8010_H	PINT4	Peripheral interrupt status register 4	R	0000 0000_H	32
FFF9 8014_H	PINT5	Peripheral interrupt status register 5	R	0000 0000_H	32
FFF9 8018_H	PINT6	Peripheral interrupt status register 6	R	0000 0000_H	32
FFF9 $801C_H$	PINT7	Peripheral interrupt status register 7	R	0000 0000_H	32
FFF9 8020_H	PINTCLR0	Interrupt clear register 0	W	0000 0000_H	32
FFF9 8024_H	PINTCLR1	Interrupt clear register 1	W	0000 0000_H	32
FFF9 8028_H	PINTCLR2	Interrupt clear register 2	W	0000 0000_H	32
FFF9 $802C_H$	PINTCLR3	Interrupt clear register 3	W	0000 0000_H	32
FFF9 8030_H	PINTCLR4	Interrupt clear register 4	W	0000 0000_H	32
FFF9 8034_H	PINTCLR5	Interrupt clear register 5	W	0000 0000_H	32
FFF9 8038_H	PINTCLR6	Interrupt clear register 6	W	0000 0000_H	32
FFF9 $803C_H$	PINTCLR7	Interrupt clear register 7	W	0000 0000_H	32

6.2.2 EIC0 - EIC383 — EI Level Interrupt Control Registers 0 to 383

These registers are used to set interrupt control conditions for each EI level interrupt source, and one register is provided for each source of this type. Writing to these registers requires care when a register is set for detection in synchronous edge detection mode. If 0 is written to the EIRFn bit immediately after a peripheral module generates the corresponding interrupt request, the request may be inadvertently lost. On the other hand, writing 1 to the EIRFn bit immediately after an interrupt is accepted by the CPU may lead to incorrect re-issuing of the request. Writing to any of these registers, therefore, should only proceed while peripheral modules are not generating interrupt requests and the CPU has not accepted any interrupt.

Writing to an EICn register includes writing by using the bit operation instructions (set1, clr1, and not1). The bit operation instructions proceed in the following sequence (1) reading the register, (2) processing the specified bit, and (3) writing the new value back to the register. When a bit operation instruction has a bit other than EIRFn as the operand, the value read in step (1) will be written back in step (3). Accordingly, the issuance of interrupt requests from peripheral modules or the acceptance of an interrupt request by the CPU between steps (1) and (3) may lead to the problems described above. Note that access to bits 15 to 13, 11 to 8, 5, and 4 using bit-manipulation instructions is prohibited.

Bit	15	14	13	12	11	10	9	8	7	6	5	4	3	2	1	0
	EICTn	—	—	EIRFn	—	—	—	—	EIMKn	EITBn	—	—	EIP3n	EIP2n	EIP1n	EIP0n
Value after reset	*1	0	0	0	0	0	0	0	1	0	0	0	1	1	1	1
R/W	R	R	R	R/W	R	R	R	R	R/W	R/W	R	R	R/W	R/W	R/W	R/W

Note 1. 0: Synchronous edge detection, 1: High-level detection

Table 6.5 EIC0 - EIC383 Register Contents (1/2)

Bit Position	Bit Name	Function
15	EICTn	Interrupt Channel Type The following values are read according to the interrupt input interface. This is a read-only bit. 0: Synchronous edge detection 1: High-level detection When writing to this bit, write the value after reset.
14, 13	Reserved	When read, the value after reset is returned. When writing to these bits, write the value after reset.
12	EIRFn	Interrupt Request Flag Operation varies with the interrupt input interface. 0: No interrupt request (Value after reset) 1: Interrupt request present • Synchronous edge detection This flag is automatically cleared to 0 when an interrupt request of the self-channel is accepted by the CPU core. This bit can be set or cleared by the software. • High level detection This bit cannot be set or cleared by the software. This is a read-only bit.
11 to 8	Reserved	When read, the value after reset is returned. When writing to these bits, write the value after reset.

Table 6.5 EIC0 - EIC383 Register Contents (2/2)

Bit Position	Bit Name	Function
7	EIMKn	Interrupt Mask While this bit is set to 1, interrupt requests set in the interrupt request flag (EIRFn) are masked to inhibit interrupt requests from the channel to the CPU core. Notification of presence of unprocessed interrupts is not made and the PMEI bit in ICSR is not set from channels for which this bit is set to 1. Even when interrupt processing is disabled by the setting of this bit, an input of interrupt signal is not masked and the interrupt request flag is set. Setting this bit is also reflected in the setting of corresponding bit of the interrupt mask register (IMR). 0: Interrupt processing is enabled. 1: Interrupt processing is disabled. (Value after reset)
6	EITBn	Interrupt Vector Method Select 0: Direct branching method based on priority 1: Table referencing method
5, 4	Reserved	When read, the value after reset is returned. When writing to these bits, write the value after reset.
3 to 0	EIP3n-0n	These bits specify 16 interrupt priority levels (0: highest priority, 15: lowest priority). If two or more EI level interrupt requests are generated simultaneously, a source with higher priority specified by these bits is selected and is sent to the CPU core. If the priority specified by these bits is equal, a source of smaller channel number is selected as fixed priority.

Note: n = 0 to 383

NOTE

The addresses of the registers corresponding to the interrupt channels that are listed as reserved in **Table 6.12, Interrupt Exception Handler and Priority**, are also reserved. Therefore, access to these addresses is prohibited. Operation cannot be guaranteed if they are accessed.

6.2.3 IMR0 - IMR11 — EI Level Interrupt Mask Registers 0 to 11

These registers are aggregation of the EIMK bit in the EIC register. Setting of the corresponding EIMK bit is reflected in each bit in the IMRn register. Furthermore, setting of the IMRn register is reflected in the corresponding EIMK bit.e, setting of the IMRn register is reflected in the corresponding EIMK bit.

IMR0

Bit	31	30	29	28	27	26	25	24	23	22	21	20	19	18	17	16
IMR0H	EIMK31	EIMK30	EIMK29	EIMK28	EIMK27	EIMK26	EIMK25	EIMK24	EIMK23	EIMK22	EIMK21	EIMK20	EIMK19	EIMK18	EIMK17	EIMK16
Value after reset	1	1	1	1	1	1	1	1	1	1	1	1	1	1	1	1
R/W	R/W	R/W	R/W	R/W	R/W	R/W	R/W	R/W	R/W	R/W	R/W	R/W	R/W	R/W	R/W	R/W

Bit	15	14	13	12	11	10	9	8	7	6	5	4	3	2	1	0
IMR0L	EIMK15	EIMK14	EIMK13	EIMK12	EIMK11	EIMK10	EIMK9	EIMK8	EIMK7	EIMK6	EIMK5	EIMK4	EIMK3	EIMK2	EIMK1	EIMK0
Value after reset	1	1	1	1	1	1	1	1	1	1	1	1	1	1	1	1
R/W	R/W	R/W	R/W	R/W	R/W	R/W	R/W	R/W	R/W	R/W	R/W	R/W	R/W	R/W	R/W	R/W

IMR1

Bit	31	30	29	28	27	26	25	24	23	22	21	20	19	18	17	16
IMR1H	EIMK63	EIMK62	EIMK61	EIMK60	EIMK59	EIMK58	EIMK57	EIMK56	EIMK55	EIMK54	EIMK53	EIMK52	EIMK51	EIMK50	EIMK49	EIMK48
Value after reset	1	1	1	1	1	1	1	1	1	1	1	1	1	1	1	1
R/W	R/W	R/W	R/W	R/W	R/W	R/W	R/W	R/W	R/W	R/W	R/W	R/W	R/W	R/W	R/W	R/W

Bit	15	14	13	12	11	10	9	8	7	6	5	4	3	2	1	0
IMR1L	EIMK47	EIMK46	EIMK45	EIMK44	EIMK43	EIMK42	EIMK41	EIMK40	EIMK39	EIMK38	EIMK37	EIMK36	EIMK35	EIMK34	EIMK33	EIMK32
Value after reset	1	1	1	1	1	1	1	1	1	1	1	1	1	1	1	1
R/W	R/W	R/W	R/W	R/W	R/W	R/W	R/W	R/W	R/W	R/W	R/W	R/W	R/W	R/W	R/W	R/W

:

:

IMR11

Bit	31	30	29	28	27	26	25	24	23	22	21	20	19	18	17	16
IMR11H	EIMK 383	EIMK 382	EIMK 381	EIMK 380	EIMK 379	EIMK 378	EIMK 377	EIMK 376	EIMK 375	EIMK 374	EIMK 373	EIMK 372	EIMK 371	EIMK 370	EIMK 369	EIMK 368
Value after reset	1	1	1	1	1	1	1	1	1	1	1	1	1	1	1	1
R/W	R/W	R/W	R/W	R/W	R/W	R/W	R/W	R/W	R/W	R/W	R/W	R/W	R/W	R/W	R/W	R/W

Bit	15	14	13	12	11	10	9	8	7	6	5	4	3	2	1	0
IMR11L	EIMK 367	EIMK 366	EIMK 365	EIMK 364	EIMK 363	EIMK 362	EIMK 361	EIMK 360	EIMK 359	EIMK 358	EIMK 357	EIMK 356	EIMK 355	EIMK 354	EIMK 353	EIMK 352
Value after reset	1	1	1	1	1	1	1	1	1	1	1	1	1	1	1	1
R/W	R/W	R/W	R/W	R/W	R/W	R/W	R/W	R/W	R/W	R/W	R/W	R/W	R/W	R/W	R/W	R/W

NOTE

The bits corresponding to the interrupt channels that are listed as reserved in **Table 6.12, Interrupt Exception Handler and Priority**, are also reserved. When read, the value after reset is read. When writing, write the value after reset.

6.2.4 EIBD0 - EIBD383 — EI Level Interrupt Bind Registers 0 to 383

These registers are provided for each EI level interrupt source to make correspondence between each source and PE.

Bit	31	30	29	28	27	26	25	24	23	22	21	20	19	18	17	16
EIBDnH	—	—	—	—	—	—	—	—	—	—	—	—	—	—	GPID[1:0]	
Value after reset	0	0	0	0	0	0	0	0	0	0	0	0	0	0	0	0
R/W	R	R	R	R	R	R	R	R	R	R	R	R	R	R	R/W	R/W

Bit	15	14	13	12	11	10	9	8	7	6	5	4	3	2	1	0
EIBDnL	—	—	—	—	—	—	—	—	—	—	—	—	—	PEID[2:0]		
Value after reset	0	0	0	0	0	0	0	0	0	0	0	0	0	0	0	1
R/W	R	R	R	R	R	R	R	R	R	R	R	R	R	R/W	R/W	R/W

Table 6.6 EIBD0 - EIBD383 Register Contents

Bit Position	Bit Name	Function
31 to 18	Reserved	When read, the value after reset is returned. When writing to these bits, write the value after reset.
17, 16	GPID	These bits are provided only in EIBD32 to EIBD383. Be sure to set these bits to 00 in this product. These bits are reserved for EIBD0 to EIBD31. When read, the value after reset is returned. When writing to these bits, write the value after reset.
15 to 3	Reserved	When read, the value after reset is returned. When writing to these bits, write the value after reset.
2 to 0	PEID	These bits specify an interrupt bind (request) destination. These bits are fixed to 001 in EIBD0 to EIBD31 and cannot be modified. Be sure to set these bits in EIBD32 to EIBD383 to 001 in this product.

NOTE

The addresses of the registers corresponding to the interrupt channels that are listed as reserved in **Table 6.12, Interrupt Exception Handler and Priority**, are also reserved. Therefore, access to these addresses is prohibited. Operation cannot be guaranteed if they are accessed.

CAUTION

Changing the corresponding EIBDn register during the processing of an EIINT request is prohibited.

6.2.5 FNC — FE Level NMI Control Register

This register is used to set FE level NMI control conditions.

Bit	15	14	13	12	11	10	9	8	7	6	5	4	3	2	1	0
	—	—	—	FNRF	—	—	—	—	—	—	—	—	—	—	—	—
Value after reset	0	0	0	0	0	0	0	0	0	0	0	0	0	0	0	0
R/W	R	R	R	R	R	R	R	R	R	R	R	R	R	R	R	R

Table 6.7 FNC Register Contents

Bit Position	Bit Name	Function
15 to 13	Reserved	When read, the value after reset is returned.
12	FNRF	Interrupt Request Flag 0: No interrupt request (Value after reset) 1: An interrupt request present This bit is automatically cleared to 0 when an FE level NMI interrupt request is accepted by the CPU core.
11 to 0	Reserved	When read, the value after reset is returned.

6.2.6 FIC — FE Level Interrupt Control Register

This register is used to set FE level interrupt control conditions.

Bit	15	14	13	12	11	10	9	8	7	6	5	4	3	2	1	0
	—	—	—	FIRF	—	—	—	—	—	—	—	—	—	—	—	—
Value after reset	0	0	0	0	0	0	0	0	0	0	0	0	0	0	0	0
R/W	R	R	R	R	R	R	R	R	R	R	R	R	R	R	R	R

Table 6.8 FIC Register Contents

Bit Position	Bit Name	Function
15 to 13	Reserved	When read, the value after reset is returned.
12	FIRF	Interrupt Request Flag 0: No interrupt request (Value after reset) 1: An interrupt request present This bit is automatically cleared to 0 when an FE level interrupt request is accepted by the CPU core.
11 to 0	Reserved	When read, the value after reset is returned.

6.2.7 SINTR0 - SINTR4 — Software Interrupt Registers

SINTR0 to SINTR4 are 8-bit registers to control software interrupts 0 to 4 (SINT0 to SINT4).

Writing 01_H to any of these registers increments the counter value by 1. Writing 00_H to any of the registers decrements the counter value by 1. When the values of these registers are 1 or larger, a software interrupt (SINT0 to SINT4) is generated. The value read from any of these registers is the current value of the register.

Bit	7	6	5	4	3	2	1	0
	SINTCn7	SINTCn6	SINTCn5	SINTCn4	SINTCn3	SINTCn2	SINTCn1	SINTCn0
Value after reset	0	0	0	0	0	0	0	0
R/W	R/W	R/W	R/W	R/W	R/W	R/W	R/W	R/W

Table 6.9 SINTR0 - SINTR4 Register Contents

Bit Position	Bit Name	Function
7 to 0	SINTCn[7:0]	Software Interrupt Request These bits generate a software interrupt. [Reading operation] The counter value of the SINTn interrupt request count is read. [Writing operation] Writing 01_H: The counter value is incremented.*1 Writing 00_H: The counter value is decremented.*2 Other than the above: Forbidden (No guarantee of operation)

Note 1. When 01_H is written while the value of the counter is FF_H, the value is not incremented, but remains at FF_H.
Note 2. When 00_H is written while the value of the counter is 00_H, the value is not decremented, but remains at 00_H.

6.2.8 PINT0 — PINT7 — Peripheral Interrupt Status Registers PINTCLR0 - PINTCLR7 — Peripheral Interrupt Status Clear Registers

The DTS transfer completion interrupt and transfer count match interrupt are merged in 32-channel units. PINT0 to PINT7 contain the interrupt status flags to indicate the originating channels for these interrupts.

Writing read value of the peripheral interrupt status registers (PINT0 to PINT7) to the interrupt clear register (PINTCLR0 to PINTCLR7) of the same channel in the interrupt handler clears interrupts. Interrupts on the lower-bits side take precedence to support multiplex interrupts.

PINT0 to PINT7 are initialized to 0000 0000_H by SYSRES.

PINT n + x (n = 0 to 3, x = 0)

Bit	31	30	29	28	27	26	25	24
	INTDTS [31+32*n]	INTDTS [30+32*n]	INTDTS [29+32*n]	INTDTS [28+32*n]	INTDTS [27+32*n]	INTDTS [26+32*n]	INTDTS [25+32*n]	INTDTS [24+32*n]
Value after reset	0	0	0	0	0	0	0	0
R/W	R	R	R	R	R	R	R	R

Bit	23	22	21	20	19	18	17	16
	INTDTS [23+32*n]	INTDTS [22+32*n]	INTDTS [21+32*n]	INTDTS [20+32*n]	INTDTS [19+32*n]	INTDTS [18+32*n]	INTDTS [17+32*n]	INTDTS [16+32*n]
Value after reset	0	0	0	0	0	0	0	0
R/W	R	R	R	R	R	R	R	R

Bit	15	14	13	12	11	10	9	8
	INTDTS [15+32*n]	INTDTS [14+32*n]	INTDTS [13+32*n]	INTDTS [12+32*n]	INTDTS [11+32*n]	INTDTS [10+32*n]	INTDTS [9+32*n]	INTDTS [8+32*n]
Value after reset	0	0	0	0	0	0	0	0
R/W	R	R	R	R	R	R	R	R

Bit	7	6	5	4	3	2	1	0
	INTDTS [7+32*n]	INTDTS [6+32*n]	INTDTS [5+32*n]	INTDTS [4+32*n]	INTDTS [3+32*n]	INTDTS [2+32*n]	INTDTS [1+32*n]	INTDTS [0+32*n]
Value after reset	0	0	0	0	0	0	0	0
R/W	R	R	R	R	R	R	R	R

PINT n + x (n = 0 to 3, x = 4)

Bit	31	30	29	28	27	26	25	24
	INTCTDTS [31+32*n]	INTCTDTS [30+32*n]	INTCTDTS [29+32*n]	INTCTDTS [28+32*n]	INTCTDTS [27+32*n]	INTCTDTS [26+32*n]	INTCTDTS [25+32*n]	INTCTDTS [24+32*n]
Value after reset	Value after reset	0	0	0	0	0	0	0
R/W	R	R	R	R	R	R	R	R

Bit	23	22	21	20	19	18	17	16
	INTCTDTS [23+32*n]	INTCTDTS [22+32*n]	INTCTDTS [21+32*n]	INTCTDTS [20+32*n]	INTCTDTS [19+32*n]	INTCTDTS [18+32*n]	INTCTDTS [17+32*n]	INTCTDTS [16+32*n]
Value after reset	0	0	0	0	0	0	0	0
R/W	R	R	R	R	R	R	R	R

Bit	15	14	13	12	11	10	9	8
	INTCTDTS [15+32*n]	INTCTDTS [14+32*n]	INTCTDTS [13+32*n]	INTCTDTS [12+32*n]	INTCTDTS [11+32*n]	INTCTDTS [10+32*n]	INTCTDTS [9+32*n]	INTCTDTS [8+32*n]
Value after reset	0	0	0	0	0	0	0	0
R/W	R	R	R	R	R	R	R	R

Bit	7	6	5	4	3	2	1	0
	INTCTDTS [7+32*n]	INTCTDTS [6+32*n]	INTCTDTS [5+32*n]	INTCTDTS [4+32*n]	INTCTDTS [3+32*n]	INTCTDTS [2+32*n]	INTCTDTS [1+32*n]	INTCTDTS [0+32*n]
Value after reset	0	0	0	0	0	0	0	0
R/W	R	R	R	R	R	R	R	R

PINTCLR n + x (n = 0 to 3, x = 0)

Bit	31	30	29	28	27	26	25	24
	INTCLR [31+32*n]	INTCLR [30+32*n]	INTCLR [29+32*n]	INTCLR [28+32*n]	INTCLR [27+32*n]	INTCLR [26+32*n]	INTCLR [25+32*n]	INTCLR [24+32*n]
Value after reset	0	0	0	0	0	0	0	0
R/W	W	W	W	W	W	W	W	W

Bit	23	22	21	20	19	18	17	16
	INTCLR [23+32*n]	INTCLR [22+32*n]	INTCLR [21+32*n]	INTCLR [20+32*n]	INTCLR [19+32*n]	INTCLR [18+32*n]	INTCLR [17+32*n]	INTCLR [16+32*n]
Value after reset	0	0	0	0	0	0	0	0
R/W	W	W	W	W	W	W	W	W

Bit	15	14	13	12	11	10	9	8
	INTCLR [15+32*n]	INTCLR [14+32*n]	INTCLR [13+32*n]	INTCLR [12+32*n]	INTCLR [11+32*n]	INTCLR [10+32*n]	INTCLR [9+32*n]	INTCLR [8+32*n]
Value after reset	0	0	0	0	0	0	0	0
R/W	W	W	W	W	W	W	W	W

Bit	7	6	5	4	3	2	1	0
	INTCLR [7+32*n]	INTCLR [6+32*n]	INTCLR [5+32*n]	INTCLR [4+32*n]	INTCLR [3+32*n]	INTCLR [2+32*n]	INTCLR [1+32*n]	INTCLR [0+32*n]
Value after reset	0	0	0	0	0	0	0	0
R/W	W	W	W	W	W	W	W	W

PINTCLR n + x (n = 0 to 3, x = 4)

Bit	31	30	29	28	27	26	25	24
	INTCTCLR [31+32*n]	INTCTCLR [30+32*n]	INTCTCLR [29+32*n]	INTCTCLR [28+32*n]	INTCTCLR [27+32*n]	INTCTCLR [26+32*n]	INTCTCLR [25+32*n]	INTCTCLR [24+32*n]
Value after reset	0	0	0	0	0	0	0	0
R/W	W	W	W	W	W	W	W	W

Bit	23	22	21	20	19	18	17	16
	INTCTCLR [23+32*n]	INTCTCLR [22+32*n]	INTCTCLR [21+32*n]	INTCTCLR [20+32*n]	INTCTCLR [19+32*n]	INTCTCLR [18+32*n]	INTCTCLR [17+32*n]	INTCTCLR [16+32*n]
Value after reset	0	0	0	0	0	0	0	0
R/W	W	W	W	W	W	W	W	W

Bit	15	14	13	12	11	10	9	8
	INTCTCLR [15+32*n]	INTCTCLR [14+32*n]	INTCTCLR [13+32*n]	INTCTCLR [12+32*n]	INTCTCLR [11+32*n]	INTCTCLR [10+32*n]	INTCTCLR [9+32*n]	INTCTCLR [8+32*n]
Value after reset	0	0	0	0	0	0	0	0
R/W	W	W	W	W	W	W	W	W

Bit	7	6	5	4	3	2	1	0
	INTCTCLR [7+32*n]	INTCTCLR [6+32*n]	INTCTCLR [5+32*n]	INTCTCLR [4+32*n]	INTCTCLR [3+32*n]	INTCTCLR [2+32*n]	INTCTCLR [1+32*n]	INTCTCLR [0+32*n]
Value after reset	0	0	0	0	0	0	0	0
R/W	W	W	W	W	W	W	W	W

PINT0

Bit Position	Bit Name	Function
31 to 0	INTDTS[31:0]	DTS transfer completion interrupt status on ch31 to ch0

PINT1

Bit Position	Bit Name	Function
31 to 0	INTDTS[63:32]	DTS transfer completion interrupt status on ch63 to ch32

PINT2

Bit Position	Bit Name	Function
31 to 0	INTDTS[95:64]	DTS transfer completion interrupt status on ch95 to ch64

PINT3

Bit Position	Bit Name	Function
31 to 0	INTDTS[127:96]	DTS transfer completion interrupt status on ch127 to ch96

PINT4

Bit Position	Bit Name	Function
31 to 0	INTCTDTS[31:0]	DTS transfer count match interrupt status on ch31 to ch0

PINT5

Bit Position	Bit Name	Function
31 to 0	INTCTDTS [63:32]	DTS transfer count match interrupt status on ch63 to ch32

PINT6

Bit Position	Bit Name	Function
31 to 0	INTCTDTS [95:64]	DTS transfer count match interrupt status on ch95 to ch64

PINT7

Bit Position	Bit Name	Function
31 to 0	INTCTDTS [127:96]	DTS transfer count match interrupt status on ch127 to ch96

PINTCLR0

Bit Position	Bit Name	Function
31 to 0	INTCLR[31:0]	These bits clear the DTS transfer completion interrupt status on ch31 to ch0. Within the interrupt handler, these bits write the value read from PINT0.

PINTCLR1

Bit Position	Bit Name	Function
31 to 0	INTCLR[63:32]	These bits clear the DTS transfer completion interrupt status on ch63 to ch32. Within the interrupt handler, these bits write the value read from PINT1.

PINTCLR2

Bit Position	Bit Name	Function
31 to 0	INTCLR[95:64]	These bits clear the DTS transfer completion interrupt status on ch95 to ch64. Within the interrupt handler, these bits write the value read from PINT2.

PINTCLR3

Bit Position	Bit Name	Function
31 to 0	INTCLR[127:96]	These bits clear the DTS transfer completion interrupt status on ch127 to ch96. Within the interrupt handler, these bits write the value read from PINT3.

PINTCLR4

Bit Position	Bit Name	Function
31 to 0	INTCTCLR[31:0]	These bits clear the DTS transfer count match interrupt status on ch31 to ch0. Within the interrupt handler, these bits write the value read from PINT4.

PINTCLR5

Bit Position	Bit Name	Function
31 to 0	INTCTCLR [63:32]	These bits clear the DTS transfer count match interrupt status on ch63 to ch32. Within the interrupt handler, these bits write the value read from PINT5.

PINTCLR6

Bit Position	Bit Name	Function
31 to 0	INTCTCLR [95:64]	These bits clear the DTS transfer count match interrupt status on ch95 to ch64. Within the interrupt handler, these bits write the value read from PINT6.

PINTCLR7

Bit Position	Bit Name	Function
31 to 0	INTCTCLR [127:96]	These bits clear the DTS transfer count match interrupt status on ch127 to ch96. Within the interrupt handler, these bits write the value read from PINT7.

6.2.9 FEINTF — FEINT Factor Register

The FE level interrupt (FEINT) factor register is used in common by the OSTM3 to OSTM7 interrupts and the pin NMI interrupt. When an FE level interrupt occurs, check the interrupt source by referring to this register.

Bit	31	30	29	28	27	26	25	24	23	22	21	20	19	18	17	16
	—	—	—	—	—	—	—	—	—	—	—	—	—	—	—	—
Value after reset	0	0	0	0	0	0	0	0	0	0	0	0	0	0	0	0
R/W	R	R	R	R	R	R	R	R	R	R	R	R	R	R	R	R

Bit	15	14	13	12	11	10	9	8	7	6	5	4	3	2	1	0
	—	—	—	—	—	—	—	—	—	—	INTOSTM7FEIF	INTOSTM6FEIF	INTOSTM5FEIF	INTOSTM4FEIF	INTOSTM3FEIF	NMIFEIF
Value after reset	0	0	0	0	0	0	0	0	0	0	0	0	0	0	0	0
R/W	R	R	R	R	R	R	R	R	R	R	R	R	R	R	R	R

Table 6.10 FEINTF Register Contents

Bit Position	Bit Name	Function
31 to 6	Reserved	When read, the value after reset is returned.
5	INTOSTM7FEIF	OSTM7 Interrupt Generation 0: OSTM7 interrupt has not been generated. 1: OSTM7 interrupt has been generated.
4	INTOSTM6FEIF	OSTM6 Interrupt Generation 0: OSTM6 interrupt has not been generated. 1: OSTM6 interrupt has been generated.
3	INTOSTM5FEIF	OSTM5 Interrupt Generation 0: OSTM5 interrupt has not been generated. 1: OSTM5 interrupt has been generated.
2	INTOSTM4FEIF	OSTM4 Interrupt Generation 0: OSTM4 interrupt has not been generated. 1: OSTM4 interrupt has been generated.
1	INTOSTM3FEIF	OSTM3 Interrupt Generation 0: OSTM3 interrupt has not been generated. 1: OSTM3 interrupt has been generated.
0	NMIFEIF	Pin NMI Interrupt Generation 0: Pin NMI interrupt has not been generated. 1: Pin NMI interrupt has been generated.

6.2.10 FEINTFC — FEINT Factor Clear Register

Bit	31	30	29	28	27	26	25	24	23	22	21	20	19	18	17	16
	—	—	—	—	—	—	—	—	—	—	—	—	—	—	—	—
Value after reset	0	0	0	0	0	0	0	0	0	0	0	0	0	0	0	0
R/W	R	R	R	R	R	R	R	R	R	R	R	R	R	R	R	R

Bit	15	14	13	12	11	10	9	8	7	6	5	4	3	2	1	0
	—	—	—	—	—	—	—	—	—	—	OSTM7 FEIFC	OSTM6 FEIFC	OSTM5 FEIFC	OSTM4 FEIFC	OSTM3 FEIFC	NMIFEI FC
Value after reset	0	0	0	0	0	0	0	0	0	0	0	0	0	0	0	0
R/W	R	R	R	R	R	R	R	R	R	R	W	W	W	W	W	W

Table 6.11 FEINTFC Register Contents

Bit Position	Bit Name	Function
31 to 6	Reserved	When writing, always write 0.
5	OSTM7FEIFC	INTOSTM7FEIF Clear 0: The INTOSTM7FEIF bit is not cleared. 1: The INTOSTM7FEIF bit is cleared.
4	OSTM6FEIFC	INTOSTM6FEIF Clear 0: The INTOSTM6FEIF bit is not cleared. 1: The INTOSTM6FEIF bit is cleared.
3	OSTM5FEIFC	INTOSTM5FEIF Clear 0: The INTOSTM5FEIF bit is not cleared. 1: The INTOSTM5FEIF bit is cleared.
2	OSTM4FEIFC	INTOSTM4FEIF Clear 0: The INTOSTM4FEIF bit is not cleared. 1: The INTOSTM4FEIF bit is cleared.
1	OSTM3FEIFC	INTOSTM3FEIF Clear 0: The INTOSTM3FEIF bit is not cleared. 1: The INTOSTM3FEIF bit is cleared.
0	NMIFEIFC	NMIFEIF Clear 0: The NMIFEIF bit is not cleared. 1: The NMIFEIF bit is cleared.

6.3 Interrupt Sources

There are five groups of interrupt sources: NMI, INTPn, ECM interrupt, software interrupts (SINT), and interrupts from the on-chip peripheral modules. The priority level of each interrupt is represented by an interrupt priority value between 0 (the highest level) and 15 (the lowest level).

6.3.1 NMI Interrupts

NMI interrupts are input from the NMI pin. A method of detecting the NMI interrupt can be selected from rising edge, falling edge, and both edges. For details on the detection method, see **Section 2, Pins**.

6.3.2 INTPn Interrupts

INTPn interrupts are input from INTPn pins. A method of detecting the INTPn interrupt can be selected from rising edge, falling edge, and both edges. For details on the detection method, see **Section 2, Pins**.

Furthermore, interrupt priority levels 0 to 15 can be set for each pin in the interrupt control register (EICm).

When an interrupt request is detected by a change in the INTPn pin, and an interrupt request signal is sent to the INTC. The INTPn interrupt request detection result is retained until the interrupt request is accepted. Whether an INTPn interrupt request has been detected or not can be checked by reading the EIRFn bit in the corresponding EI level interrupt control register n (EICn) for INTPn. Writing 0 clears the INTPn interrupt request detection result.

When exiting the INTPn interrupt exception handler, confirm that the EIRFn bit has been cleared in the corresponding EI level interrupt control register n (EICn) for INTPn to prevent re-acceptance by mistake, and then issue an instruction to return from interrupt.

6.3.3 ECM Interrupts

The Error Control Module (ECM) generates ECM interrupt requests by merging error interrupts from multiple sources. For details, see **Section 32, Error Control Module (ECM)** and **Section 31, Functional Safety**.

6.3.4 Software Interrupts

Software interrupt (SINT) priority can be set within priority levels 0 to 15 for each interrupt source.

6.3.5 On-Chip Peripheral Module Interrupts

For the on-chip peripheral module that generates an interrupt, see **Table 6.12, Interrupt Exception Handler and Priority**.

Since different interrupt vectors are assigned to each source, the interrupt exception handler need not decide sources. Priority can be set within priority levels 0 to 15 for each interrupt source.

6.4 Interrupt Exception Handler and Priority Operations

Table 6.12 lists interrupt sources, source codes, exception handler offset addresses, and interrupt priority.

There are two specifications for exception handler addresses: (1) standard specifications where exception handler addresses are determined by the PSW.EBV bit in the CPU core, RBASE register, and EBASE register and (2) extended specifications where exception handler addresses for interrupts are specified individually for each channel.

In the standard specifications, an offset address is added to the base address (RBASE register /EBASE register) in the CPU core to generate an exception handler address. The following two methods are provided for giving an interrupt offset address. For channels other than the interrupt channel, the specified offset address is given.

- An offset address is determined within a range of +100H to +1F0H according to the priority level (0 to 15) specified for each channel, regardless of interrupt channels (offset address, direct branch, RINT = 0 in **Table 6.12**).
- Every offset address is +100H regardless of the priority level. This is a function to reduce the memory occupation size of the exception handler (offset address, direct branch, RINT = 1 in **Table 6.12**).

In the extended specifications, a table for reading exception handler addresses for each interrupt channel is provided. The handler address is extracted by referencing the table. The table reference position is obtained by the following calculation formula (offset address, table reference in **Table 6.12**). The INTBP register exists in the CPU core.

Exception handler address read position = INTBP + channel number * 4-byte

For details of handler addresses, see *the RH850G3M User's Manual: Software*.

Priority levels 0 to 15 (0: highest) of INTPn (external interrupts) and on-chip peripheral module interrupts can be set for each channel. If specified priority levels are equal, an interrupt source of smaller channel number is selected as fixed priority.

CAUTION

SYNCP instruction must be located in front of exception hander, FENMI, FEINT, EIINT (Direct Vector Method), SYSERR and FPI. For the details, see *the RH850G3M User's Manual: Software*.

Table 6.12 Interrupt Exception Handler and Priority (1/9)

Functional Module	Interrupt Source Name	Level Interrupt*1	Number of Interrupt Channel (EIINT)	Source Code	Offset Address: Direct Branch RINT = 0	Offset Address: Direct Branch RINT = 1	Offset Address: Table Reference	Interrupt Priority (Value after reset)	Default Priority	512KB, 1 MB	2 MB
Non-maskable interrupt	Error control module (non-maskable)		(FENMI)	$E0_H$	$+0E0_H$	$+0E0_H$	—		High	√	√
FE level interrupt	OSTM3 to OSTM7 NMI pin interrupt		(FEINT)	$F0_H$	$+0F0_H$	$+0F0_H$	—			√	√
	Reserved		0	1000	The offset address is the same in all channels and is determined between $+100_H$ and $+1F0_H$ according to priority.	The offset address is always $+100_H$ regardless of priority to reduce the offset address.	$+000_H$	0 to 15 (15)		—	—
	Reserved		1	1001			$+004_H$	0 to 15 (15)		—	—
	Reserved		2	1002			$+008_H$	0 to 15 (15)		—	—
	Reserved		3	1003			$+00C_H$	0 to 15 (15)		—	—
	Reserved		4	1004			$+010_H$	0 to 15 (15)		—	—
	Reserved		5	1005			$+014_H$	0 to 15 (15)		—	—
	Reserved		6	1006			$+018_H$	0 to 15 (15)		—	—
	Reserved		7	1007			$+01C_H$	0 to 15 (15)		—	—
Error control module	Error control module (maskable) (INTECM)		8	1008			$+020_H$	0 to 15 (15)		√	√
WDTA	WDTATIT 75% interrupt (INTWDTA0)		9	1009			$+024_H$	0 to 15 (15)		√	√
	Reserved		10	100A			$+028_H$	0 to 15 (15)		—	—
	Reserved		11	100B			$+02C_H$	0 to 15 (15)		—	—
	Reserved		12	100C			$+030_H$	0 to 15 (15)		—	—
	Reserved		13	100D			$+034_H$	0 to 15 (15)		—	—
	Reserved		14	100E			$+038_H$	0 to 15 (15)		—	—
	Reserved		15	100F			$+03C_H$	0 to 15 (15)		—	—
DMA	DMA0 transfer end/count match (INTDMA0)		16	1010			$+040_H$	0 to 15 (15)		√	√
	DMA1 transfer end/count match (INTDMA1)		17	1011			$+044_H$	0 to 15 (15)		√	√
	DMA2 transfer end/count match (INTDMA2)		18	1012			$+048_H$	0 to 15 (15)		√	√
	DMA3 transfer end/count match (INTDMA3)		19	1013			$+04C_H$	0 to 15 (15)		√	√
	DMA4 transfer end/count match (INTDMA4)		20	1014			$+050_H$	0 to 15 (15)		√	√
	DMA5 transfer end/count match (INTDMA5)		21	1015			$+054_H$	0 to 15 (15)		√	√
	DMA6 transfer end/count match (INTDMA6)		22	1016			$+058_H$	0 to 15 (15)		√	√
	DMA7 transfer end/count match (INTDMA7)		23	1017			$+05C_H$	0 to 15 (15)		√	√
	DMA8 transfer end/count match (INTDMA8)		24	1018			$+060_H$	0 to 15 (15)		√	√
	DMA9 transfer end/count match (INTDMA9)		25	1019			$+064_H$	0 to 15 (15)		√	√
	DMA10 transfer end/count match (INTDMA10)		26	101A			$+068_H$	0 to 15 (15)		√	√
	DMA11 transfer end/count match (INTDMA11)		27	101B			$+06C_H$	0 to 15 (15)		√	√
	DMA12 transfer end/count match (INTDMA12)		28	101C			$+070_H$	0 to 15 (15)		√	√
	DMA13 transfer end/count match (INTDMA13)		29	101D			$+074_H$	0 to 15 (15)		√	√
	DMA14 transfer end/count match (INTDMA14)		30	101E			$+078_H$	0 to 15 (15)		√	√
	DMA15 transfer end/count match (INTDMA15)		31	101F			$+07C_H$	0 to 15 (15)		√	√
INTP	External interrupt 0 (INTP0)		32	1020			$+080_H$	0 to 15 (15)		√	√
	External interrupt 1 (INTP1)		33	1021			$+084_H$	0 to 15 (15)		√	√
	External interrupt 2 (INTP2)		34	1022			$+088_H$	0 to 15 (15)		√	√
	External interrupt 3 (INTP3)		35	1023			$+08C_H$	0 to 15 (15)		√	√
	External interrupt 4 (INTP4)		36	1024			$+090_H$	0 to 15 (15)		√	√
	Reserved		37	1025			$+094_H$	0 to 15 (15)		—	—
	Reserved		38	1026			$+098_H$	0 to 15 (15)		—	—
	Reserved		39	1027			$+09C_H$	0 to 15 (15)		—	—
TSG30	TSG30 compare match interrupt 0 (INTTSG30I0)		40	1028			$+0A0_H$	0 to 15 (15)		√	√
	TSG30 compare match interrupt 1 (INTTSG30I1)		41	1029			$+0A4_H$	0 to 15 (15)		√	√
	TSG30 compare match interrupt 2 (INTTSG30I2)		42	102A			$+0A8_H$	0 to 15 (15)		√	√
	TSG30 compare match interrupt 3 (INTTSG30I3)		43	102B			$+0AC_H$	0 to 15 (15)		√	√

Table 6.12 Interrupt Exception Handler and Priority (2/9)

Functional Module	Interrupt Source Name	Level Interrupt*1	Number of Interrupt Channel (EIINT)	Source Code	Offset Address: Direct Branch RINT = 0	Offset Address: Direct Branch RINT = 1	Offset Address: Table Reference	Interrupt Priority (Value after reset)	Default Priority	512KB, 1 MB	2 MB
TSG30	TSG30 compare match interrupt 4 (INTTSG30I4)		44	102C	The offset address is the same in all channels and is determined between $+100_H$ and $+1F0_H$ according to priority.	The offset address is always $+100_H$ regardless of priority to reduce the offset address.	$+0B0_H$	0 to 15 (15)	High	√	√
	TSG30 compare match interrupt 5 (INTTSG30I5)		45	102D			$+0B4_H$	0 to 15 (15)		√	√
	TSG30 compare match interrupt 6 (INTTSG30I6)		46	102E			$+0B8_H$	0 to 15 (15)		√	√
	TSG30 compare match interrupt 7 (INTTSG30I7)		47	102F			$+0BC_H$	0 to 15 (15)		√	√
	TSG30 compare match interrupt 8 (INTTSG30I8)		48	1030			$+0C0_H$	0 to 15 (15)		√	√
	TSG30 compare match interrupt 9 (INTTSG30I9)		49	1031			$+0C4_H$	0 to 15 (15)		√	√
	TSG30 compare match interrupt 10 (INTTSG30I10)		50	1032			$+0C8_H$	0 to 15 (15)		√	√
	TSG30 compare match interrupt 11 (INTTSG30I11)		51	1033			$+0CC_H$	0 to 15 (15)		√	√
	TSG30 compare match interrupt 12 (INTTSG30I12)		52	1034			$+0D0_H$	0 to 15 (15)		√	√
	TSG30 peak interrupt (INTTSG30IPEK)		53	1035			$+0D4_H$	0 to 15 (15)		√	√
	TSG30 valley interrupt (INTTSG30IVLY)		54	1036			$+0D8_H$	0 to 15 (15)		√	√
	TSG30 timer error interrupt (INTTSG30IER)		55	1037			$+0DC_H$	0 to 15 (15)		√	√
	TSG30 timer warning interrupt (INTTSG30IWN)		56	1038			$+0E0_H$	0 to 15 (15)		√	√
TSG31	TSG31 compare match interrupt 0 (INTTSG31I0)		57	1039			$+0E4_H$	0 to 15 (15)		√	√
	TSG31 compare match interrupt 1 (INTTSG31I1)		58	103A			$+0E8_H$	0 to 15 (15)		√	√
	TSG31 compare match interrupt 2 (INTTSG31I2)		59	103B			$+0EC_H$	0 to 15 (15)		√	√
	TSG31 compare match interrupt 3 (INTTSG31I3)		60	103C			$+0F0_H$	0 to 15 (15)		√	√
	TSG31 compare match interrupt 4 (INTTSG31I4)		61	103D			$+0F4_H$	0 to 15 (15)		√	√
	TSG31 compare match interrupt 5 (INTTSG31I5)		62	103E			$+0F8_H$	0 to 15 (15)		√	√
	TSG31 compare match interrupt 6 (INTTSG31I6)		63	103F			$+0FC_H$	0 to 15 (15)		√	√
	TSG31 compare match interrupt 7 (INTTSG31I7)		64	1040			$+100_H$	0 to 15 (15)		√	√
	TSG31 compare match interrupt 8 (INTTSG31I8)		65	1041			$+104_H$	0 to 15 (15)		√	√
	TSG31 compare match interrupt 9 (INTTSG31I9)		66	1042			$+108_H$	0 to 15 (15)		√	√
	TSG31 compare match interrupt 10 (INTTSG31I10)		67	1043			$+10C_H$	0 to 15 (15)		√	√
	TSG31 compare match interrupt 11 (INTTSG31I11)		68	1044			$+110_H$	0 to 15 (15)		√	√
	TSG31 compare match interrupt 12 (INTTSG31I12)		69	1045			$+114_H$	0 to 15 (15)		√	√
	TSG31 peak interrupt (INTTSG31IPEK)		70	1046			$+118_H$	0 to 15 (15)		√	√
	TSG31 valley interrupt (INTTSG31IVLY)		71	1047			$+11C_H$	0 to 15 (15)		√	√
	TSG31 timer error interrupt (INTTSG31IER)		72	1048			$+120_H$	0 to 15 (15)		√	√
	TSG31 timer warning interrupt (INTTSG31IWN)		73	1049			$+124_H$	0 to 15 (15)		√	√
OSTM0	OSTM0 interrupt (INTOSTM0)		74	104A			$+128_H$	0 to 15 (15)		√	√
OSTM1	OSTM1 interrupt (INTOSTM1)		75	104B			$+12C_H$	0 to 15 (15)		√	√
ADCD0	ADCD0 error interrupt (INTADCD0ERR)		76	104C			$+130_H$	0 to 15 (15)		√	√
	ADCD0 SG0 end interrupt (INTADCD0I0)		77	104D			$+134_H$	0 to 15 (15)		√	√
	ADCD0 SG1 end interrupt (INTADCD0I1)		78	104E			$+138_H$	0 to 15 (15)		√	√
	ADCD0 SG2 end interrupt (INTADCD0I2)		79	104F			$+13C_H$	0 to 15 (15)		√	√
	ADCD0 SG3 end interrupt (INTADCD0I3)		80	1050			$+140_H$	0 to 15 (15)		√	√
	ADCD0 SG4 end interrupt (INTADCD0I4)		81	1051			$+144_H$	0 to 15 (15)		√	√
CSIH0	CSIH0 communication error interrupt (INTCSIH0IRE)		82	1052			$+148_H$	0 to 15 (15)		√	√
	CSIH0 receive status/CS0 receive status interrupt (INTCSIH0IR0S)		83	1053			$+14C_H$	0 to 15 (15)		√	√
	CSIH0 communication status/CS0 communication status interrupt (INTCSIH0IC0S)		84	1054			$+150_H$	0 to 15 (15)		√	√
	CSIH0 CS1 receive status interrupt (INTCSIH0IR1)		85	1055			$+154_H$	0 to 15 (15)		√	√
	CSIH0 CS1 communication status interrupt (INTCSIH0IC1)		86	1056			$+158_H$	0 to 15 (15)		√	√
	CSIH0 CS2 receive status interrupt (INTCSIH0IR2)		87	1057			$+15C_H$	0 to 15 (15)		√	√
	CSIH0 CS2 communication status interrupt (INTCSIH0IC2)		88	1058			$+160_H$	0 to 15 (15)		√	√
	CSIH0 JOB end interrupt (INTCSIH0IJC)		89	1059			$+164_H$	0 to 15 (15)		√	√

Table 6.12 Interrupt Exception Handler and Priority (3/9)

Functional Module	Interrupt Source Name	Level Interrupt*1	Number of Interrupt Channel (EIINT)	Source Code	Offset Address: Direct Branch RINT = 0	Offset Address: Direct Branch RINT = 1	Offset Address: Table Reference	Interrupt Priority (Value after reset)	Default Priority	512KB, 1 MB	2 MB
CSIH1	CSIH1 communication error interrupt (INTCSIH1IRE)		90	105A	The offset address is the same in all channels and is determined between $+100_H$ and $+1F0_H$ according to priority.	The offset address is always $+100_H$ regardless of priority to reduce the offset address.	$+168_H$	0 to 15 (15)	High	√	√
	CSIH1 receive status/CS0 receive status interrupt (INTCSIH1IR0S)		91	105B			$+16C_H$	0 to 15 (15)		√	√
	CSIH1communication status/CS0 communication status interrupt (INTCSIH1IC0S)		92	105C			$+170_H$	0 to 15 (15)		√	√
	CSIH1 CS1 receive status interrupt (INTCSIH1IR1)		93	105D			$+174_H$	0 to 15 (15)		√	√
	CSIH1 CS1 communication status interrupt (INTCSIH1IC1)		94	105E			$+178_H$	0 to 15 (15)		√	√
	CSIH1 CS2 receive status interrupt (INTCSIH1IR2)		95	105F			$+17C_H$	0 to 15 (15)		√	√
	CSIH1 CS2 communication status interrupt (INTCSIH1IC2)		96	1060			$+180_H$	0 to 15 (15)		√	√
	CSIH1 JOB end interrupt (INTCSIH1JC)		97	1061			$+184_H$	0 to 15 (15)		√	√
CSIH2	CSIH2 communication error interrupt (INTCSIH2IRE)		98	1062			$+188_H$	0 to 15 (15)		√	√
	CSIH2 receive status interrupt (INTCSIH2IR)		99	1063			$+18C_H$	0 to 15 (15)		√	√
	CSIH2 communication status interrupt (INTCSIH2IC)		100	1064			$+190_H$	0 to 15 (15)		√	√
	CSIH2 JOB end interrupt (INTCSIH2IJC)		101	1065			$+194_H$	0 to 15 (15)		√	√
CSIH3	CSIH3 communication error interrupt (INTCSIH3IRE)		102	1066			$+198_H$	0 to 15 (15)		√	√
	CSIH3 receive status interrupt (INTCSIH3IR)		103	1067			$+19C_H$	0 to 15 (15)		√	√
	CSIH3 communication status interrupt (INTCSIH3IC)		104	1068			$+1A0_H$	0 to 15 (15)		√	√
	CSIH3 JOB JOB end interrupt (INTCSIH3IJC)		105	1069			$+1A4_H$	0 to 15 (15)		√	√
SCI30	SCI30 receive error (INTSCI30ERI)	√	106	106A			$+1A8_H$	0 to 15 (15)		√	√
	SCI30 receive data full (INTSCI30RXI)		107	106B			$+1AC_H$	0 to 15 (15)		√	√
	SCI30 transmit data empty (INTSCI30TXI)		108	106C			$+1B0_H$	0 to 15 (15)		√	√
	SCI30 transmit end (INTSCI30TEI)	√	109	106D			$+1B4_H$	0 to 15 (15)		√	√
SCI31	SCI31 receive error (INTSCI31ERI)	√	110	106E			$+1B8_H$	0 to 15 (15)		√	√
	SCI31 receive data full (INTSCI31RXI)		111	106F			$+1BC_H$	0 to 15 (15)		√	√
	SCI31 transmit data empty (INTSCI31TXI)		112	1070			$+1C0_H$	0 to 15 (15)		√	√
	SCI31 transmit end (INTSCI31TEI)	√	113	1071			$+1C4_H$	0 to 15 (15)		√	√
RLIN30	RLIN30 status interrupt (INTRLIN30UR2)		114	1072			$+1C8_H$	0 to 15 (15)		√	√
	RLIN30 receive completion interrupt (INTRLIN30UR1)		115	1073			$+1CC_H$	0 to 15 (15)		√	√
	RLIN30 transmit interrupt (INTRLIN30UR0)		116	1074			$+1D0_H$	0 to 15 (15)		√	√
RLIN31	RLIN31 status interrupt (INTRLIN31UR2)		117	1075			$+1D4_H$	0 to 15 (15)		√	√
	RLIN31 receive completion interrupt (INTRLIN31UR1)		118	1076			$+1D8_H$	0 to 15 (15)		√	√
	RLIN31 transmit interrupt (INTRLIN31UR0)		119	1077			$+1DC_H$	0 to 15 (15)		√	√
SINT	Software interrupt 3 (INTSINT3)	√	120	1078			$+1E0_H$	0 to 15 (15)		√	√
	Software interrupt 4 (INTSINT4)	√	121	1079			$+1E4_H$	0 to 15 (15)		√	√
	Reserved		122	107A			$+1E8_H$	0 to 15 (15)		—	—
	Reserved		123	107B			$+1EC_H$	0 to 15 (15)		—	—
	Reserved		124	107C			$+1F0_H$	0 to 15 (15)		—	—
	Reserved		125	107D			$+1F4_H$	0 to 15 (15)		—	—
	Reserved		126	107E			$+1F8_H$	0 to 15 (15)		—	—
	Reserved		127	107F			$+1FC_H$	0 to 15 (15)		—	—
INTP	Software interrupt 5 (INTP5)		128	1080			$+200_H$	0 to 15 (15)		√	√
	Software interrupt 6 (INTP6)		129	1081			$+204_H$	0 to 15 (15)		√	√
	Software interrupt 7 (INTP7)		130	1082			$+208_H$	0 to 15 (15)		√	√
	Software interrupt 8 (INTP8)		131	1083			$+20C_H$	0 to 15 (15)		√	√
	Software interrupt 9 (INTP9)		132	1084			$+210_H$	0 to 15 (15)		√	√
TAUJ0	CH0 interrupt of TAUJ0 (INTTAUJ0I0)		133	1085			$+214_H$	0 to 15 (15)		√	√
	CH1 interrupt of TAUJ0 (INTTAUJ0I1)		134	1086			$+218_H$	0 to 15 (15)		√	√
	CH2 interrupt of TAUJ0 (INTTAUJ0I2)		135	1087			$+21C_H$	0 to 15 (15)		√	√
	CH3 interrupt of TAUJ0 (INTTAUJ0I3)		136	1088			$+220_H$	0 to 15 (15)		√	√

Table 6.12 Interrupt Exception Handler and Priority (4/9)

Functional Module	Interrupt Source Name	Level Interrupt*1	Number of Interrupt Channel (EIINT)	Source Code	Offset Address: Direct Branch RINT = 0	Offset Address: Direct Branch RINT = 1	Offset Address: Table Reference	Interrupt Priority (Value after reset)	Default Priority	512KB, 1 MB	2 MB
TAUJ1	CH0 interrupt of TAUJ1 (INTTAUJ1I0)		137	1089	The offset address is the same in all channels and is determined between $+100_H$ and $+1F0_H$ according to priority.	The offset address is always $+100_H$ regardless of priority to reduce the offset address.	$+224_H$	0 to 15 (15)	High	√	√
	CH1 interrupt of TAUJ1 (INTTAUJ1I1)		138	108A			$+228_H$	0 to 15 (15)		√	√
	CH2 interrupt of TAUJ1 (INTTAUJ1I2)		139	108B			$+22C_H$	0 to 15 (15)		√	√
	CH3 interrupt of TAUJ1 (INTTAUJ1I3)		140	108C			$+230_H$	0 to 15 (15)		√	√
TAUD0	CH0 interrupt of TAUD0 (INTTAUD0I0)		141	108D			$+234_H$	0 to 15 (15)		√	√
	CH1 interrupt of TAUD0 (INTTAUD0I1)		142	108E			$+238_H$	0 to 15 (15)		√	√
	CH2 interrupt of TAUD0 (INTTAUD0I2)		143	108F			$+23C_H$	0 to 15 (15)		√	√
	CH3 interrupt of TAUD0 (INTTAUD0I3)		144	1090			$+240_H$	0 to 15 (15)		√	√
	CH4 interrupt of TAUD0 (INTTAUD0I4)		145	1091			$+244_H$	0 to 15 (15)		√	√
	CH5 interrupt of TAUD0 (INTTAUD0I5)		146	1092			$+248_H$	0 to 15 (15)		√	√
	CH6 interrupt of TAUD0 (INTTAUD0I6)		147	1093			$+24C_H$	0 to 15 (15)		√	√
	CH7 interrupt of TAUD0 (INTTAUD0I7)		148	1094			$+250_H$	0 to 15 (15)		√	√
	CH8 interrupt of TAUD0 (INTTAUD0I8)		149	1095			$+254_H$	0 to 15 (15)		√	√
	CH9 interrupt of TAUD0 (INTTAUD0I9)		150	1096			$+258_H$	0 to 15 (15)		√	√
	CH10 interrupt of TAUD0 (INTTAUD0I10)		151	1097			$+25C_H$	0 to 15 (15)		√	√
	CH11 interrupt of TAUD0 (INTTAUD0I11)		152	1098			$+260_H$	0 to 15 (15)		√	√
	CH12 interrupt of TAUD0 (INTTAUD0I12)		153	1099			$+264_H$	0 to 15 (15)		√	√
	CH13 interrupt of TAUD0 (INTTAUD0I13)		154	109A			$+268_H$	0 to 15 (15)		√	√
	CH14 interrupt of TAUD0 (INTTAUD0I14)		155	109B			$+26C_H$	0 to 15 (15)		√	√
	CH15 interrupt of TAUD0 (INTTAUD0I15)		156	109C			$+270_H$	0 to 15 (15)		√	√
	Reserved		157	109D			$+274_H$	0 to 15 (15)		—	—
TAUD1	CH0 interrupt of TAUD1 (INTTAUD1I0)		158	109E			$+278_H$	0 to 15 (15)		√	√
	CH1 interrupt of TAUD1 (INTTAUD1I1)		159	109F			$+27C_H$	0 to 15 (15)		√	√
	CH2 interrupt of TAUD1 (INTTAUD1I2)		160	10A0			$+280_H$	0 to 15 (15)		√	√
	CH3 interrupt of TAUD1 (INTTAUD1I3)		161	10A1			$+284_H$	0 to 15 (15)		√	√
	CH4 interrupt of TAUD1 (INTTAUD1I4)		162	10A2			$+288_H$	0 to 15 (15)		√	√
	CH5 interrupt of TAUD1 (INTTAUD1I5)		163	10A3			$+28C_H$	0 to 15 (15)		√	√
	CH6 interrupt of TAUD1 (INTTAUD1I6)		164	10A4			$+290_H$	0 to 15 (15)		√	√
	CH7 interrupt of TAUD1 (INTTAUD1I7)		165	10A5			$+294_H$	0 to 15 (15)		√	√
	CH8 interrupt of TAUD1 (INTTAUD1I8)		166	10A6			$+298_H$	0 to 15 (15)		√	√
	CH9 interrupt of TAUD1 (INTTAUD1I9)		167	10A7			$+29C_H$	0 to 15 (15)		√	√
	CH10 interrupt of TAUD1 (INTTAUD1I10)		168	10A8			$+2A0_H$	0 to 15 (15)		√	√
	CH11 interrupt of TAUD1 (INTTAUD1I11)		169	10A9			$+2A4_H$	0 to 15 (15)		√	√
	CH12 interrupt of TAUD1 (INTTAUD1I12)		170	10AA			$+2A8_H$	0 to 15 (15)		√	√
	CH13 interrupt of TAUD1 (INTTAUD1I13)		171	10AB			$+2AC_H$	0 to 15 (15)		√	√
	CH14 interrupt of TAUD1 (INTTAUD1I14)		172	10AC			$+2B0_H$	0 to 15 (15)		√	√
	CH15 interrupt of TAUD1 (INTTAUD1I15)		173	10AD			$+2B4_H$	0 to 15 (15)		√	√
CSIG0	CSIG0 receive error interrupt (INTCSIG0IRE)		174	10AE			$+2B8_H$	0 to 15 (15)		√	√
	CSIG0 transmit status interrupt (INTCSIG0IC)		175	10AF			$+2BC_H$	0 to 15 (15)		√	√
	CSIG0 receive status interrupt (INTCSIG0IR)		176	10B0			$+2C0_H$	0 to 15 (15)		√	√
ADCD1	ADCD1 error interrupt (INTADCD1ERR)		177	10B1			$+2C4_H$	0 to 15 (15)		√	√
	ADCD1 SG0 end interrupt (INTADCD1I0)		178	10B2			$+2C8_H$	0 to 15 (15)		√	√
	ADCD1 SG1 end interrupt (INTADCD1I1)		179	10B3			$+2CC_H$	0 to 15 (15)		√	√
	ADCD1 SG2 end interrupt (INTADCD1I2)		180	10B4			$+2D0_H$	0 to 15 (15)		√	√
	ADCD1 SG3 end interrupt (INTADCD1I3)		181	10B5			$+2D4_H$	0 to 15 (15)		√	√
	ADCD1 SG4 end interrupt (INTADCD1I4)		182	10B6			$+2D8_H$	0 to 15 (15)		√	√
RSCAN	Channel error interrupt 0 (INTRCAN0ERR)	√	183	10B7			$+2DC_H$	0 to 15 (15)		√	√
	COM RX FIFO interrupt 0 (INTRCAN0REC)	√	184	10B8			$+2E0_H$	0 to 15 (15)		√	√
	Channel TX interrupt 0 (INTRCAN0TRX)	√	185	10B9			$+2E4_H$	0 to 15 (15)		√	√

Table 6.12 Interrupt Exception Handler and Priority (5/9)

Functional Module	Interrupt Source Name	Level Interrupt*1	Number of Interrupt Channel (EIINT)	Source Code	Offset Address: Direct Branch: RINT = 0	Offset Address: Direct Branch: RINT = 1	Offset Address: Table Reference	Interrupt Priority (Value after reset)	Default Priority	512KB, 1 MB	2 MB
RSCAN	Channel error interrupt 1 (INTRCAN1ERR)	√	186	10BA	The offset address is the same in all channels and is determined between $+100_H$ and $+1F0_H$ according to priority.	The offset address is always $+100_H$ regardless of priority to reduce the offset address.	$+2E8_H$	0 to 15 (15)	High	√	√
	COM RX FIFO interrupt 1 (INTRCAN1REC)	√	187	10BB			$+2EC_H$	0 to 15 (15)		√	√
	Channel TX interrupt 1 (INTRCAN1TRX)	√	188	10BC			$+2F0_H$	0 to 15 (15)		√	√
	Global error interrupt (INTRCANGERR)	√	189	10BD			$+2F4_H$	0 to 15 (15)		√	√
	RX FIFO interrupt (INTRCANGRECC)	√	190	10BE			$+2F8_H$	0 to 15 (15)		√	√
	Channel error interrupt 2 (INTRCAN2ERR)	√	191	10BF			$+2FC_H$	0 to 15 (15)		—	√
	COM RX FIFO interrupt 2 (INTRCAN2REC)	√	192	10C0			$+300_H$	0 to 15 (15)		—	√
	Channel TX interrupt 2 (INTRCAN2TRX)	√	193	10C1			$+304_H$	0 to 15 (15)		—	√
FLEXRAY	FlexRay0 interrupt (INTFLX0LINE0)	√	194	10C2			$+308_H$	0 to 15 (15)		√	√
	FlexRay1 interrupt (INTFLX0LINE1)	√	195	10C3			$+30C_H$	0 to 15 (15)		√	√
	Timer 0 interrupt (INTFLX0TIM0)	√	196	10C4			$+310_H$	0 to 15 (15)		√	√
	Timer 1 interrupt (INTFLX0TIM1)	√	197	10C5			$+314_H$	0 to 15 (15)		√	√
	Timer 2 interrupt (INTFLX0TIM2)	√	198	10C6			$+318_H$	0 to 15 (15)		√	√
	FIFO transfer interrupt (INTFLX0FDA)	√	199	10C7			$+31C_H$	0 to 15 (15)		√	√
	FIFO transfer warning interrupt (INTFLX0FW)	√	200	10C8			$+320_H$	0 to 15 (15)		√	√
	Output transfer warning interrupt (INTFLX0OW)	√	201	10C9			$+324_H$	0 to 15 (15)		√	√
	Output transfer end interrupt (INTFLX0OT)	√	202	10CA			$+328_H$	0 to 15 (15)		√	√
	Input queue full interrupt (INTFLX0IQF)	√	203	10CB			$+32C_H$	0 to 15 (15)		√	√
	Input queue empty interrupt (INTFLX0IQE)	√	204	10CC			$+330_H$	0 to 15 (15)		√	√
	Reserved		205	10CD			$+334_H$	0 to 15 (15)		—	—
	Reserved		206	10CE			$+338_H$	0 to 15 (15)		—	—
	Reserved		207	10CF			$+33C_H$	0 to 15 (15)		—	—
	Reserved		208	10D0			$+340_H$	0 to 15 (15)		—	—
	Reserved		209	10D1			$+344_H$	0 to 15 (15)		—	—
	Reserved		210	10D2			$+348_H$	0 to 15 (15)		—	—
	Reserved		211	10D3			$+34C_H$	0 to 15 (15)		—	—
	Reserved		212	10D4			$+350_H$	0 to 15 (15)		—	—
	Reserved		213	10D5			$+354_H$	0 to 15 (15)		—	—
	Reserved		214	10D6			$+358_H$	0 to 15 (15)		—	—
	Reserved		215	10D7			$+35C_H$	0 to 15 (15)		—	—
	Reserved		216	10D8			$+360_H$	0 to 15 (15)		—	—
	Reserved		217	10D9			$+364_H$	0 to 15 (15)		—	—
SCI32	SCI32 receive error (INTSCI32ERI)	√	218	10DA			$+368_H$	0 to 15 (15)		√	√
	SCI32 receive data full (INTSCI32RXI)		219	10DB			$+36C_H$	0 to 15 (15)		√	√
	SCI32 transmit data empty (INTSCI32TXI)		220	10DC			$+370_H$	0 to 15 (15)		√	√
	SCI32 transmit end (INTSCI32TEI)	√	221	10DD			$+374_H$	0 to 15 (15)		√	√
	Reserved		222	10DE			$+378_H$	0 to 15 (15)		—	—
	Reserved		223	10DF			$+37C_H$	0 to 15 (15)		—	—
	Reserved		224	10E0			$+380_H$	0 to 15 (15)		—	—
	Reserved		225	10E1			$+384_H$	0 to 15 (15)		—	—
PSI50	PSI50 status interrupt (INTPSI50SI)	√	226	10E2			$+388_H$	0 to 15 (15)		√	√
	PSI50 receive interrupt (INTPSI50RI)	√	227	10E3			$+38C_H$	0 to 15 (15)		√	√
	PSI50 transfer interrupt (INTPSI50TI)	√	228	10E4			$+390_H$	0 to 15 (15)		√	√
PSI51	PSI51 status interrupt (INTPSI51SI)	√	229	10E5			$+394_H$	0 to 15 (15)		√	√
	PSI51 receive interrupt (INTPSI51RI)	√	230	10E6			$+398_H$	0 to 15 (15)		√	√
	PSI51 transfer interrupt (INTPSI51TI)	√	231	10E7			$+39C_H$	0 to 15 (15)		√	√
SENT0	SETN0 status interrupt (INTSENT0SI)	√	232	10E8			$+3A0_H$	0 to 15 (15)		√	√
	SETN0 receive interrupt (INTSENT0RI)		233	10E9			$+3A4_H$	0 to 15 (15)		√	√

Table 6.12 Interrupt Exception Handler and Priority (6/9)

Functional Module	Interrupt Source Name	Level Interrupt*1	Number of Interrupt Channel (EIINT)	Source Code	Offset Address: Direct Branch RINT = 0	Offset Address: Direct Branch RINT = 1	Offset Address: Table Reference	Interrupt Priority (Value after reset)	Default Priority	512KB, 1 MB	2 MB
SENT1	SETN1 status interrupt (INTSENT1SI)	√	234	10EA	The offset address is the same in all channels and is determined between $+100_H$ and $+1F0_H$ according to priority.	The offset address is always $+100_H$ regardless of priority to reduce the offset address.	$+3A8_H$	0 to 15 (15)	High	√	√
	SETN1 receive interrupt (INTSENT1RI)		235	10EB			$+3AC_H$	0 to 15 (15)		√	√
SENT2	SETN2 status interrupt (INTSENT2SI)	√	236	10EC			$+3B0_H$	0 to 15 (15)		√	√
	SETN2 receive interrupt (INTSENT2RI)		237	10ED			$+3B4_H$	0 to 15 (15)		√	√
SENT3	SETN3 status interrupt (INTSENT3SI)	√	238	10EE			$+3B8_H$	0 to 15 (15)		√	√
	SETN3 receive interrupt (INTSENT3RI)		239	10EF			$+3BC_H$	0 to 15 (15)		√	√
SENT4	SETN4 status interrupt (INTSENT4SI)	√	240	10F0			$+3C0_H$	0 to 15 (15)		√	√
	SETN4 receive interrupt (INTSENT4RI)		241	10F1			$+3C4_H$	0 to 15 (15)		√	√
SENT5	SETN5 status interrupt (INTSENT5SI)	√	242	10F2			$+3C8_H$	0 to 15 (15)		√	√
	SETN5 receive interrupt (INTSENT5RI)		243	10F3			$+3CC_H$	0 to 15 (15)		√	√
DTS	DTS transfer end interrupt Ch0-31 (INTDTSTC0)	√	244	10F4			$+3D0_H$	0 to 15 (15)		√	√
	DTS transfer end interrupt Ch32-63 (INTDTSTC1)	√	245	10F5			$+3D4_H$	0 to 15 (15)		√	√
	DTS transfer end interrupt Ch64-95 (INTDTSTC2)	√	246	10F6			$+3D8_H$	0 to 15 (15)		√	√
	DTS transfer end interrupt Ch96-127 (INTDTSTC3)	√	247	10F7			$+3DC_H$	0 to 15 (15)		√	√
	DTS count match interrupt Ch0-31 (INTDTSCM0)	√	248	10F8			$+3E0_H$	0 to 15 (15)		√	√
	DTS count match interrupt Ch32-63 (INTDTSCM1)	√	249	10F9			$+3E4_H$	0 to 15 (15)		√	√
	DTS count match interrupt Ch64-95 (INTDTSCM2)	√	250	10FA			$+3E8_H$	0 to 15 (15)		√	√
	DTS count match interrupt Ch96-127 (INTDTSCM3)	√	251	10FB			$+3EC_H$	0 to 15 (15)		√	√
SINT	Software interrupt 0 (INTSINT0)	√	252	10FC			$+3F0_H$	0 to 15 (15)		√	√
	Software interrupt 1 (INTSINT1)	√	253	10FD			$+3F4_H$	0 to 15 (15)		√	√
	Software interrupt 2 (INTSINT2)	√	254	10FE			$+3F8_H$	0 to 15 (15)		√	√
	Reserved		255	10FF			$+3FC_H$	0 to 15 (15)		—	—
TAUJ2	CH0 interrupt of TAUJ2 (INTTAUJ2I0)		256	1100			$+400_H$	0 to 15 (15)		√	√
	CH1 interrupt of TAUJ2 (INTTAUJ2I1)		257	1101			$+404_H$	0 to 15 (15)		√	√
	CH2 interrupt of TAUJ2 (INTTAUJ2I2)		258	1102			$+408_H$	0 to 15 (15)		√	√
	CH3 interrupt of TAUJ2 (INTTAUJ2I3)		259	1103			$+40C_H$	0 to 15 (15)		√	√
TAUD2	CH0 interrupt of TAUD2 (INTTAUD2I0)		260	1104			$+410_H$	0 to 15 (15)		√	√
	CH1 interrupt of TAUD2 (INTTAUD2I1)		261	1105			$+414_H$	0 to 15 (15)		√	√
	CH2 interrupt of TAUD2 (INTTAUD2I2)		262	1106			$+418_H$	0 to 15 (15)		√	√
	CH3 interrupt of TAUD2 (INTTAUD2I3)		263	1107			$+41C_H$	0 to 15 (15)		√	√
	CH4 interrupt of TAUD2 (INTTAUD2I4)		264	1108			$+420_H$	0 to 15 (15)		√	√
	CH5 interrupt of TAUD2 (INTTAUD2I5)		265	1109			$+424_H$	0 to 15 (15)		√	√
	CH6 interrupt of TAUD2 (INTTAUD2I6)		266	110A			$+428_H$	0 to 15 (15)		√	√
	CH7 interrupt of TAUD2 (INTTAUD2I7)		267	110B			$+42C_H$	0 to 15 (15)		√	√
	CH8 interrupt of TAUD2 (INTTAUD2I8)		268	110C			$+430_H$	0 to 15 (15)		√	√
	CH9 interrupt of TAUD2 (INTTAUD2I9)		269	110D			$+434_H$	0 to 15 (15)		√	√
	CH10 interrupt of TAUD2 (INTTAUD2I10)		270	110E			$+438_H$	0 to 15 (15)		√	√
	CH11 interrupt of TAUD2 (INTTAUD2I11)		271	110F			$+43C_H$	0 to 15 (15)		√	√
	CH12 interrupt of TAUD2 (INTTAUD2I12)		272	1110			$+440_H$	0 to 15 (15)		√	√
	CH13 interrupt of TAUD2 (INTTAUD2I13)		273	1111			$+444_H$	0 to 15 (15)		√	√
	CH14 interrupt of TAUD2 (INTTAUD2I14)		274	1112			$+448_H$	0 to 15 (15)		√	√
	CH15 interrupt of TAUD2 (INTTAUD2I15)		275	1113			$+44C_H$	0 to 15 (15)		√	√
ENCA0	ENCA0 overflow interrupt (INTENCA0IOV)		276	1114			$+450_H$	0 to 15 (15)		√	√
	ENCA0 match/capture interrupt 0 (INTENCA0I0)		277	1115			$+454_H$	0 to 15 (15)		√	√
	ENCA0 match/capture interrupt 1 (INTENCA0I1)		278	1116			$+458_H$	0 to 15 (15)		√	√
	ENCA0 underflow interrupt (INTENCA0IUD)		279	1117			$+45C_H$	0 to 15 (15)		√	√
	ENCA0 encoder clear interrupt (INTENCA0IEC)		280	1118			$+460_H$	0 to 15 (15)		√	√

Table 6.12 Interrupt Exception Handler and Priority (7/9)

Functional Module	Interrupt Source Name	Level Interrupt*1	Number of Interrupt Channel (EIINT)	Source Code	Offset Address: Direct Branch RINT = 0	Offset Address: Direct Branch RINT = 1	Offset Address: Table Reference	Interrupt Priority (Value after reset)	Default Priority	512KB, 1 MB	2 MB
ENCA1	ENCA1 overflow interrupt (INTENCA1IOV)		281	1119	The offset address is the same in all channels and is determined between $+100_H$ and $+1F0_H$ according to priority.	The offset address is always $+100_H$ regardless of priority to reduce the offset address.	$+464_H$	0 to 15 (15)	High	√	√
	ENCA1 match/capture interrupt 0 (INTENCA1I0)		282	111A			$+468_H$	0 to 15 (15)		√	√
	ENCA1 match/capture interrupt 1 (INTENCA1I1)		283	111B			$+46C_H$	0 to 15 (15)		√	√
	ENCA1 underflow interrupt (INTENCA1IUD)		284	111C			$+470_H$	0 to 15 (15)		√	√
	ENCA1 encoder clear interrupt (INTENCA1IEC)		285	111D			$+474_H$	0 to 15 (15)		√	√
TPBA0	Period match detection interrupt 0 (INTTPBA0IPRD)		286	111E			$+478_H$	0 to 15 (15)		√	√
	Duty match detection interrupt 0 (INTTPBA0IDTY)		287	111F			$+47C_H$	0 to 15 (15)		√	√
	Pattern number matching detection interrupt 0 (INTTPBA0IPAT)		288	1120			$+480_H$	0 to 15 (15)		√	√
TPBA1	Period match detection interrupt 1 (INTTPBA1IPRD)		289	1121			$+484_H$	0 to 15 (15)		√	√
	Duty match detection interrupt 1 (INTTPBA1IDTY)		290	1122			$+488_H$	0 to 15 (15)		√	√
	Pattern number matching detection interrupt 1 (INTTPBA1IPAT)		291	1123			$+48C_H$	0 to 15 (15)		√	√
	Reserved		292	1124			$+490_H$	0 to 15 (15)		—	—
	Reserved		293	1125			$+494_H$	0 to 15 (15)		—	—
MPX	ADCD0 MPX request interrupt (INTADCD0MPX)		294	1126			$+498_H$	0 to 15 (15)		√	√
	ADCD1 MPX request interrupt (INTADCD1MPX)		295	1127			$+49C_H$	0 to 15 (15)		√	√
INTP	External interrupt 10 (INTP10)		296	1128			$+4A0_H$	0 to 15 (15)		√	√
	External interrupt 11 (INTP11)		297	1129			$+4A4_H$	0 to 15 (15)		√	√
	External interrupt 12 (INTP12)		298	112A			$+4A8_H$	0 to 15 (15)		√	√
	Reserved		299	112B			$+4AC_H$	0 to 15 (15)		—	—
	Reserved		300	112C			$+4B0_H$	0 to 15 (15)		—	—
	Reserved		301	112D			$+4B4_H$	0 to 15 (15)		—	—
	Reserved		302	112E			$+4B8_H$	0 to 15 (15)		—	—
	Reserved		303	112F			$+4BC_H$	0 to 15 (15)		—	—
	Reserved		304	1130			$+4C0_H$	0 to 15 (15)		—	—
	Reserved		305	1131			$+4C4_H$	0 to 15 (15)		—	—
	Reserved		306	1132			$+4C8_H$	0 to 15 (15)		—	—
	Reserved		307	1133			$+4CC_H$	0 to 15 (15)		—	—
	Reserved		308	1134			$+4D0_H$	0 to 15 (15)		—	—
	Reserved		309	1135			$+4D4_H$	0 to 15 (15)		—	—
	Reserved		310	1136			$+4D8_H$	0 to 15 (15)		—	—
	Reserved		311	1137			$+4DC_H$	0 to 15 (15)		—	—
	Reserved		312	1138			$+4E0_H$	0 to 15 (15)		—	—
	Reserved		313	1139			$+4E4_H$	0 to 15 (15)		—	—
	Reserved		314	113A			$+4E8_H$	0 to 15 (15)		—	—
	Reserved		315	113B			$+4EC_H$	0 to 15 (15)		—	—
	Reserved		316	113C			$+4F0_H$	0 to 15 (15)		—	—
	Reserved		317	113D			$+4F4_H$	0 to 15 (15)		—	—
	Reserved		318	113E			$+4F8_H$	0 to 15 (15)		—	—
	Reserved		319	113F			$+4FC_H$	0 to 15 (15)		—	—
	Reserved		320	1140			$+500_H$	0 to 15 (15)		—	—
	Reserved		321	1141			$+504_H$	0 to 15 (15)		—	—
	Reserved		322	1142			$+508_H$	0 to 15 (15)		—	—
	Reserved		323	1143			$+50C_H$	0 to 15 (15)		—	—
	Reserved		324	1144			$+510_H$	0 to 15 (15)		—	—
	Reserved		325	1145			$+514_H$	0 to 15 (15)		—	—
	Reserved		326	1146			$+518_H$	0 to 15 (15)		—	—
	Reserved		327	1147			$+51C_H$	0 to 15 (15)		—	—
	Reserved		328	1148			$+520_H$	0 to 15 (15)		—	—

Table 6.12 Interrupt Exception Handler and Priority (8/9)

Functional Module	Interrupt Source Name	Level Interrupt*1	Number of Interrupt Channel (EIINT)	Source Code	Offset Address: Direct Branch RINT = 0	Offset Address: Direct Branch RINT = 1	Offset Address: Table Reference	Interrupt Priority (Value after reset)	Default Priority	512KB, 1 MB	2 MB
	Reserved		329	1149	The offset address is the same in all channels and is determined between $+100_H$ and $+1F0_H$ according to priority.	The offset address is always $+100_H$ regardless of priority to reduce the offset address.	$+524_H$	0 to 15 (15)	High	—	—
	Reserved		330	114A			$+528_H$	0 to 15 (15)		—	—
	Reserved		331	114B			$+52C_H$	0 to 15 (15)		—	—
	Reserved		332	114C			$+530_H$	0 to 15 (15)		—	—
	Reserved		333	114D			$+534_H$	0 to 15 (15)		—	—
	Reserved		334	114E			$+538_H$	0 to 15 (15)		—	—
	Reserved		335	114F			$+53C_H$	0 to 15 (15)		—	—
	Reserved		336	1150			$+540_H$	0 to 15 (15)		—	—
	Reserved		337	1151			$+544_H$	0 to 15 (15)		—	—
	Reserved		338	1152			$+548_H$	0 to 15 (15)		—	—
	Reserved		339	1153			$+54C_H$	0 to 15 (15)		—	—
	Reserved		340	1154			$+550_H$	0 to 15 (15)		—	—
	Reserved		341	1155			$+554_H$	0 to 15 (15)		—	—
	Reserved		342	1156			$+558_H$	0 to 15 (15)		—	—
	Reserved		343	1157			$+55C_H$	0 to 15 (15)		—	—
	Reserved		344	1158			$+560_H$	0 to 15 (15)		—	—
	Reserved		345	1159			$+564_H$	0 to 15 (15)		—	—
	Reserved		346	115A			$+568_H$	0 to 15 (15)		—	—
	Reserved		347	115B			$+56C_H$	0 to 15 (15)		—	—
	Reserved		348	115C			$+570_H$	0 to 15 (15)		—	—
	Reserved		349	115D			$+574_H$	0 to 15 (15)		—	—
	Reserved		350	115E			$+578_H$	0 to 15 (15)		—	—
	Reserved		351	115F			$+57C_H$	0 to 15 (15)		—	—
	Reserved		352	1160			$+580_H$	0 to 15 (15)		—	—
	Reserved		353	1161			$+584_H$	0 to 15 (15)		—	—
	Reserved		354	1162			$+588_H$	0 to 15 (15)		—	—
	Reserved		355	1163			$+58C_H$	0 to 15 (15)		—	—
	Reserved		356	1164			$+590_H$	0 to 15 (15)		—	—
	Reserved		357	1165			$+594_H$	0 to 15 (15)		—	—
	Reserved		358	1166			$+598_H$	0 to 15 (15)		—	—
	Reserved		359	1167			$+59C_H$	0 to 15 (15)		—	—
	Reserved		360	1168			$+5A0_H$	0 to 15 (15)		—	—
	Reserved		361	1169			$+5A4_H$	0 to 15 (15)		—	—
	Reserved		362	116A			$+5A8_H$	0 to 15 (15)		—	—
	Reserved		363	116B			$+5AC_H$	0 to 15 (15)		—	—
	Reserved		364	116C			$+5B0_H$	0 to 15 (15)		—	—
	Reserved		365	116D			$+5B4_H$	0 to 15 (15)		—	—
	Reserved		366	116E			$+5B8_H$	0 to 15 (15)		—	—
	Reserved		367	116F			$+5BC_H$	0 to 15 (15)		—	—
	Reserved		368	1170			$+5C0_H$	0 to 15 (15)		—	—
	Reserved		369	1171			$+5C4_H$	0 to 15 (15)		—	—
	Reserved		370	1172			$+5C8_H$	0 to 15 (15)		—	—
	Reserved		371	1173			$+5CC_H$	0 to 15 (15)		—	—
	Reserved		372	1174			$+5D0_H$	0 to 15 (15)		—	—
	Reserved		373	1175			$+5D4_H$	0 to 15 (15)		—	—
	Reserved		374	1176			$+5D8_H$	0 to 15 (15)		—	—
	Reserved		375	1177			$+5DC_H$	0 to 15 (15)		—	—
	Reserved		376	1178			$+5E0_H$	0 to 15 (15)		—	—
	Reserved		377	1179			$+5E4_H$	0 to 15 (15)		—	—

Table 6.12 Interrupt Exception Handler and Priority (9/9)

Functional Module	Interrupt Source Name	Level Interrupt*1	Number of Interrupt Channel (EIINT)	Source Code	Offset Address: Direct Branch: RINT = 0	Offset Address: Direct Branch: RINT = 1	Offset Address: Table Reference	Interrupt Priority (Value after reset)	Default Priority	512KB, 1 MB	2 MB
	Reserved		378	117A	The offset address is the same in all channels and is determined between $+100_H$ and $+1F0_H$ according to priority.	The offset address is always $+100_H$ regardless of priority to reduce the offset address.	$+5E8_H$	0 to 15 (15)	High	—	—
Flash	Flash sequencer end interrupt (INTFLENDNM)*3		379	117B			$+5EC_H$	0 to 15 (15)	↑	√	√
	Reserved		380	117C			$+5F0_H$	0 to 15 (15)		—	—
	Reserved		381	117D			$+5F4_H$	0 to 15 (15)		—	—
	Reserved		382	117E			$+5F8_H$	0 to 15 (15)		—	—
Flash	Flash sequencer end error interrupt (INTFLERR)*3	√	383	117F			$+5FC_H$	0 to 15 (15)		√	√

Note 1. The table indicates whether interrupts from each source are detected by level or edge. If a cell in this column is checked, the interrupt from that source is detected when the signal is at the high level. If it is blank, detection is of the selected edge. For interrupts from sources detected by the signal being at the high level, use software in the interrupt handler to clear the status register in the given module.

Note 2. For a level interrupt, the status register in each module should be cleared during interrupt processing by software.

Note 3. For details of interrupt generation factors, see *the RH850/P1x Flash Memory User's Manual: Hardware Interface*.

6.5 Operation

6.5.1 External Interrupts (NMI / INTP)

NMI and INTP interrupts are input from external devices. Three detection methods for these interrupts are selectable by register setting. For the interrupt detection flow, see **Section 6.5.4, Interrupt Processing Flow**.

6.5.2 Software Interrupt

For the operation of software interrupts, see **Section 6.2.7, SINTR0 - SINTR4 — Software Interrupt Registers** and **Section 6.5.4, Interrupt Processing Flow**.

6.5.3 DTS Interrupt Merge Function

Up to 128 transfer end interrupts and up to 128 transfer count match interrupts are aggregated into one interrupt in units of 32 interrupts.

When multiplex interrupts have occurred, bits of only accepted interrupt sources are set to 1 in status registers (PINT0 to PINT7) so that accepted interrupts can be recognized. For the interrupt request flow by merging DTS interrupts, see **Section 6.5.4, Interrupt Processing Flow**.

Table 6.13 DTS Interrupt-related Registers

Interrupt Source	CH	Status Register	Clear Register
DTS transfer end interrupt	0 to 31	PINT0	PINTCLR0
	32 to 63	PINT1	PINTCLR1
	64 to 95	PINT2	PINTCLR2
	96 to 127	PINT3	PINTCLR3
DTS transfer count match interrupt	0 to 31	PINT4	PINTCLR4
	32 to 63	PINT5	PINTCLR5
	64 to 95	PINT6	PINTCLR6
	96 to 127	PINT7	PINTCLR7

6.5.4 Interrupt Processing Flow

6.5.4.1 NMI Processing Flow

Figure 6.1 shows an NMI detection flow.

- Select an NMI detecting method (rising edge, falling edge, and both edges) by setting the FCLA0CTL0 register.
- After an NMI has been detected, an interrupt request is sent to the INTC.
- When the interrupt processing in the INTC has been completed, the INTC enters the NMI detection waiting state again.

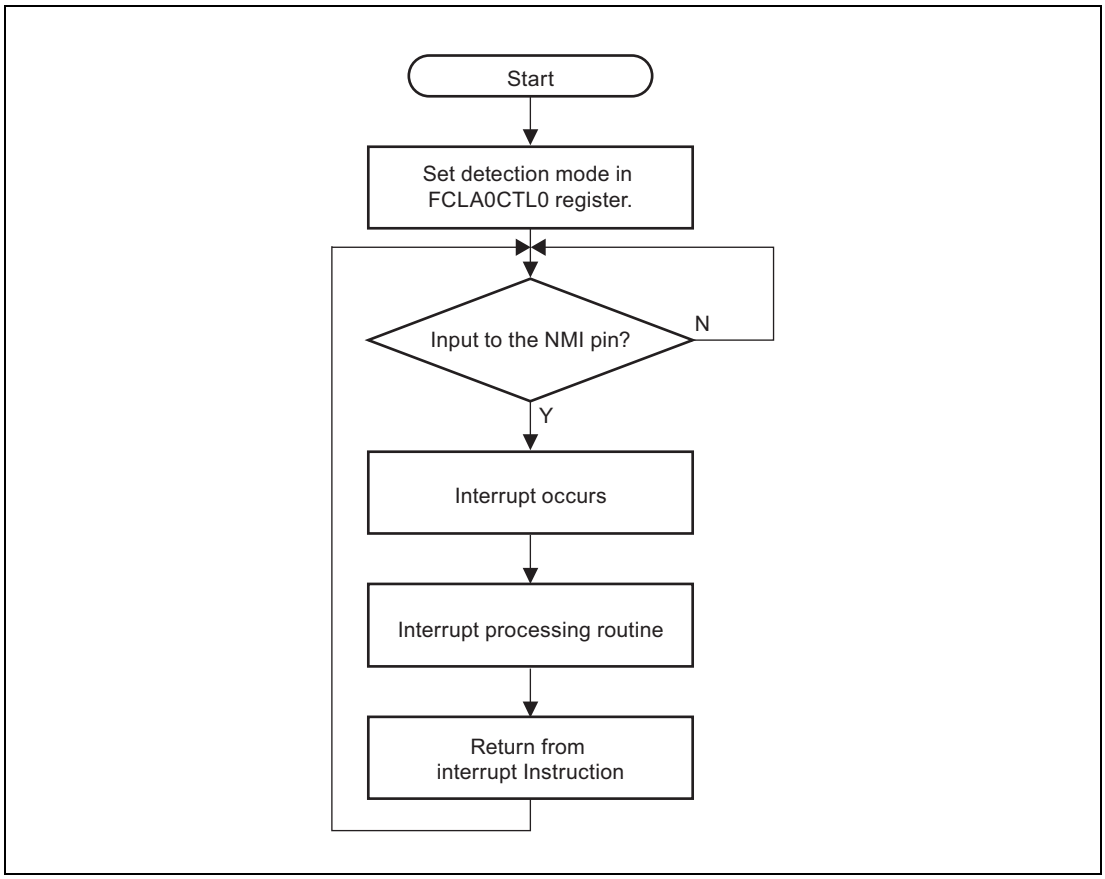

Figure 6.1 NMI Processing Flow

6.5.4.2 External Interrupt Processing Flow

Figure 6.2 shows an INTP (external interrupt) detection flow.

- Select an INTP detecting method (rising edge, falling edge, and both edges) by setting the FCLAnCTLm register.
- After an INTP has been detected, an interrupt request is sent to the INTC.

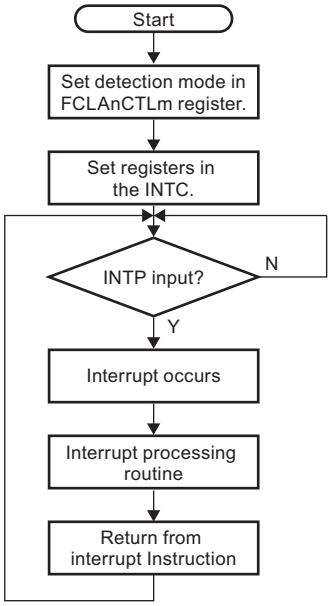

Figure 6.2 External Interrupt Processing Flow

6.5.4.3 Software Interrupt Processing Flow

Figure 6.3 shows the flow of software interrupt requests.

- Software interrupt requests are controlled by writing 00_H or 01_H to the counter bits SINTCn[7:0] in the software interrupt registers (SINTR0 to SINTR4).
- Writing 01_H increments the counter value by 1.
- Writing 00_H decrements the counter value by 1.
- If an incremented counter value is larger than 1, an interrupt request is issued to the INTC.
- On completion of other interrupt processing in the INTC, if SINTRn is 00_H, normal processing resumes.

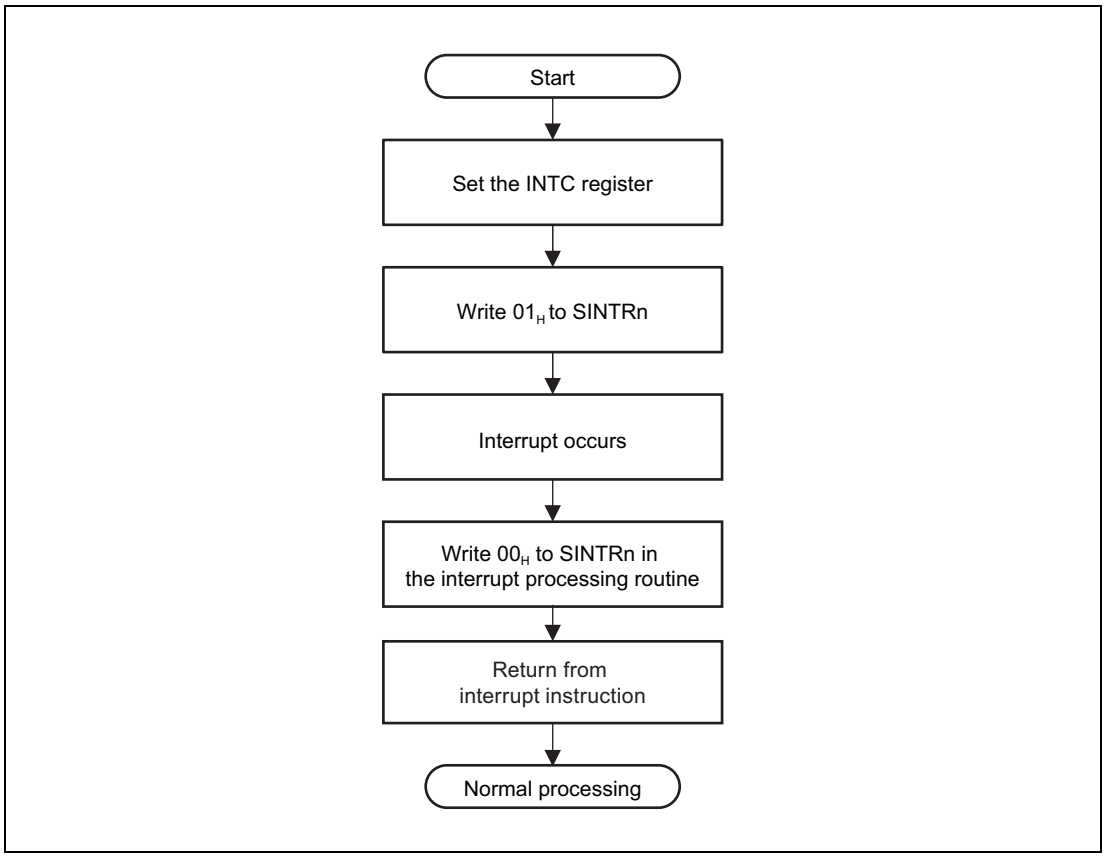

Figure 6.3 Software Interrupt Processing Flow

6.5.4.4 DTS Interrupt Processing Flow

Figure 6.4 shows a DTS interrupt request flow.

- When only one interrupt request is generated out of bundled 32 interrupt sources
  - The bit corresponding to the interrupt request in the PINTn register is set to 1 and an interrupt request is output.
  - On completion of other interrupt processing, write 1 to the interrupt clear register (PINTCLRn) to clear the interrupt request before issuing the return from interrupt instruction, then wait for the next one.
- When multiplex interrupt requests are generated out of bundled 32 interrupt sources
  - The highest-priority bit (interrupts on the lower-bits side take precedence) out of bits with interrupt request is extracted and only the extracted bit in the PINTn register is set to 1, and an interrupt request is output.
  - On completion of other interrupt processing, write 1 to the interrupt clear register (PINTCLRn) to clear the highest-priority interrupt request, then issue the return from interrupt instruction.
  - After the highest-priority interrupt request has been cleared, the second highest-priority interrupt request is accepted. The corresponding bit in the PINTn register is set to 1 in the same way as before, and an interrupt request is output.
  - These steps are repeated until all interrupt sources bundled into 32 bits are cleared.

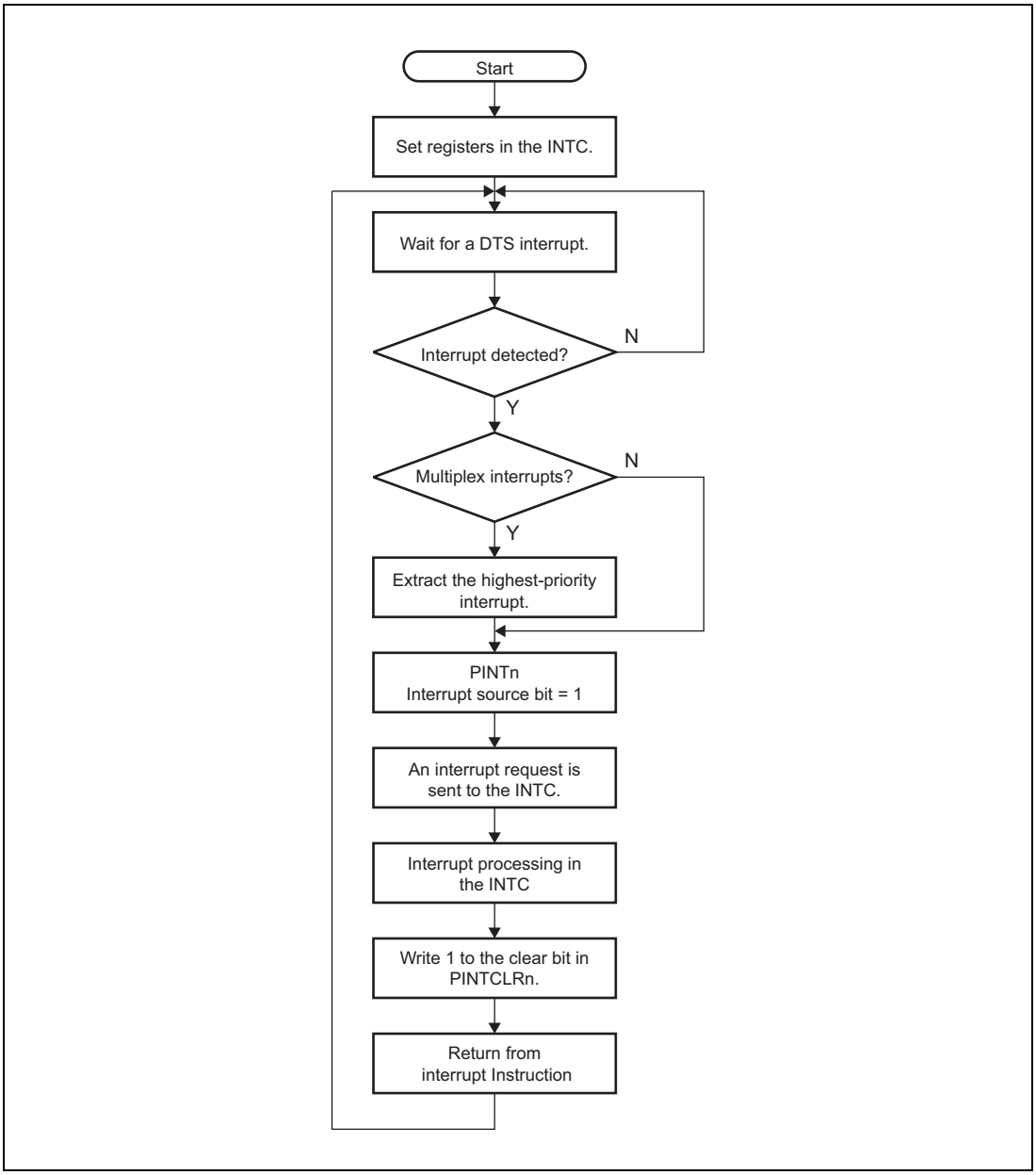

Figure 6.4 DTS Interrupt Processing Flow

6.6 Interrupt Response Times

Table 6.14 Interrupt Response Times

Target	Interrupt Request Source	Number of Cycles for Processing			
	INTC Connection	INTC2	INTC1	In CPU1	Total (in the case of edge detection by fixed vector method a))
CPU1	Directly input to INTC1	—	2 × Iϕ <1 × Iϕ>	See the description under “in CPU1” below.	7 × Iϕ
	Input via INTC2	3 × Pϕ + 1 × If <2 × Pϕ + 1 × If>	—		3 × Pϕ + 6 × Iϕ

Note 1. The numbers in < > indicate the numbers of cycles in the case of level detection.

Note 2. Pϕ: CLK_HSB, Iϕ: CLK_CPU

Vector Method	Cache HIT/MISS	In CPU1 (160 MHz)
Fixed vector method	a) ISR ENTRY I$ HIT	5 × Iϕ
	b) ISR ENTRY I$ MISS	8 × Iϕ
Vector table reference method	c) Vector code Flash assigned, ISR ENTRY I$ HIT	12 × Iϕ
	d) Vector code Flash assigned, ISR ENTRY I$ MISS	15 × Iϕ

Note: Pϕ: CLK_HSB, Iϕ: CLK_CPU

6.7 Using Interrupt Request Signals to Initiate Data Transfer

An interrupt request signal activates the DMAC/DTS to perform data transfer. For details, see **Section 7, DMA**.

Section 7 DMA

7.1 Overview

7.1.1 Overview

Direct memory access (DMA) is used to access data without going through the CPU.

DMA consists of two types of DMA transfer modules: DMAC and DTS. A DMAC includes registers for storing transfer information, and a DTS stores transfer information in the external RAM (DTSRAM). DMA has two 8-channel DMAC modules and one 128-channel DTS module.

In this manual, DTFR denotes the function to select among hardware DMA transfer sources for a DMAC and retain the DMA transfer request, and DTSFSL denotes the function to retain a DMA transfer request for each DTS channel. The DTFR can handle 128 types of hardware DMA transfer sources, and the DTSFSL can handle 128 types of them.

The address space that can be used for DMA transfer is a 4 GB address space represented by a 32-bit address. For information about which resource is assigned to a particular area in the 4 GB address space and which area is accessible from DMA, see **Section 3.2.3, Reliability Functions** and **Section 4, Address Space**.

7.1.2 Reset Sources

DMA reset sources are listed in the following table. DMA is initialized by these reset sources.

Table 7.1 Reset Sources

Unit Name	Reset Sources
DMA	Reset controller SYSRES

7.1.3 Term Definition

Table 7.2 shows the terms used in this section.

Table 7.2 Definition of Terms

Term	Meaning
DMA transfer	A general term for data transfer carried out by DMA.
DMA cycle	A series of actions that consist of reading an amount of data specified by the transfer size (8/16/32/64/128 bits) from the address specified by the source address and writing it to the address specified by the destination address. The first half of the DMA cycle (reading part) is called a read cycle, and the second half (writing part) is called a write cycle.
Hardware DMA transfer source	A trigger for a DMA transfer request given by an internal peripheral device.
Hardware DMA transfer request	A DMA transfer request generated by a hardware DMA transfer source
Software DMA transfer request	A DMA transfer request generated by software writing to a register.
DMA transfer request	A trigger to start DMA transfer with a DMAC and DTS.
Transfer information (TI)	The information required for DMA transfer, including the source address, destination address, transfer data size, and transfer count. The transfer information for a DTS is specifically termed TI.
DTSRAM	RAM used by a DTS to store the transfer information.
Single transfer	DMA transfer consisting of one DMA cycle started by one DMA transfer request. When the number of the transfer specified in the DMAC transfer count register n (DTCn) is complete, INTDMAn is generated.
Block transfer 1	DMA transfer consisting of a number of DMA cycles specified by the transfer count in the transfer information, started by one DMA transfer request.
Block transfer 2	DMA transfer consisting of a number of DMA cycles specified by the address reload count in the transfer information, started by one DMA transfer request.
Block transfer	A general term for both block transfer 1 and block transfer 2.
Last transfer	The DMA cycle carried out when the transfer count in the transfer information is 1.
Address reload transfer	The DMA cycle carried out when the address reload count in the transfer information is 1 if the reload function 2 is used.
Suspension	An action of pausing DMA transfer during block transfer. You can resume DMA transfer after suspension.
Resume	An action of resuming suspended DMA transfer.
Transfer abort	An action of aborting DMA transfer in the middle. You cannot resume DMA transfer after that.

7.2 DMA Function

7.2.1 Basic Operation of DMA Transfer

7.2.1.1 Transfer Mode

DMA has three transfer modes.

Single transfer

One DMA cycle is executed when a DMA transfer request is accepted.

Block transfer 1

A number of DMA cycles specified in the transfer count register are executed when a DMA transfer request is accepted.

Block transfer 2

A number of DMA cycles specified by the address reload count are executed when a DMA transfer request is accepted. If the address reload count is larger than the value in the transfer count register, a number of DMA cycles specified in the transfer count register are executed.

7.2.1.2 Executing a DMA Cycle

DMA always executes a write cycle after a read cycle is complete. For example, if the transfer data size is 128 bits, a write cycle is executed after a read cycle for the 128-bit data is finished. A write cycle never starts in the middle of a read cycle.

7.2.1.3 Updating Transfer Information

When a DMA cycle is executed, DMA updates transfer information as follows.

Source address and destination address

Transfer information will be updated as described in **Table 7.3** according to the settings for the source address and destination address and the settings in the transfer control register such as the count directions of source address and destination address and transfer data size.

Table 7.3 Updating the Source Address and the Destination Address

Direction of Count	Transfer Data Size	Address after Update
Increment	8 bits	(address before update) + $0000\ 0001_H$
	16 bits	(address before update) + $0000\ 0002_H$
	32 bits	(address before update) + $0000\ 0004_H$
	64 bits	(address before update) + $0000\ 0008_H$
	128 bits	(address before update) + $0000\ 0010_H$
Decrement	8 bits	(address before update) – $0000\ 0001_H$
	16 bits	(address before update) – $0000\ 0002_H$
	32 bits	(address before update) – $0000\ 0004_H$
	64 bits	(address before update) – $0000\ 0008_H$
	128 bits	(address before update) – $0000\ 0010_H$
Fixed	—	Same as the address before update

When you use the reload function, a special update rule other than the one described in **Table 7.3** is applied for the last transfer and the address reload transfer. For details, see **Section 7.2.3, Reload Function**.

Transfer count/address reload count

The transfer count is decremented by one for every DMA cycle.

The address reload count is decremented by one for every DMA cycle when the reload function 2 or block transfer 2 is used. When the reload function 2 or block transfer 2 is not used, it is not updated.

When you use the reload function, a special update rule is applied for the last transfer and the address reload transfer. For details, see **Section 7.2.3, Reload Function**.

Other transfer information

Other transfer information is not updated during execution of a DMA cycle.

7.2.1.4 Last Transfer and Address Reload Transfer

The last transfer means a DMA cycle executed when the value in the transfer count register, which shows the remaining number of transfers, is one. The last transfer differs in operation compared to other DMA cycles as follows.

- The transfer completion flag (DCSTn.TC) is set when the last transfer is complete. (Only applicable for a DMAC)
- The channel operation enable (DCENn.DTE) bit is cleared when the last transfer is complete. (Only applicable for a DMAC. When the continuous transfer is disabled.)
- When the transfer completion interrupt output enable is set, a transfer completion interrupt is output when the last transfer is complete.
- When the reload function 1 is enabled, the reload function 1 is executed at the timing of the last transfer. For details, see **Section 7.2.3, Reload Function**.

The address reload transfer means a DMA cycle executed when the reload function 2 is enabled and the address reload count is one. The reload function 2 is executed during the address reload transfer. For details, see **Section 7.2.3, Reload Function**.

7.2.1.5 Transfer Completion Interrupt and Transfer Count Match Interrupt Outputs

DMA can output a transfer completion interrupt and a transfer count match interrupt to external devices.

Transfer completion interrupt output

When the transfer completion interrupt output enable (DTCTn.TCE) is set in the transfer control register, a DMAC requests a transfer completion interrupt when the last transfer is complete.

When the transfer completion interrupt output enable (DTTCTnnn.TCE) is set in the transfer control register, a DTS requests a DTS transfer completion interrupt when the last transfer is complete.

Transfer count match interrupt output

When the transfer count match interrupt enable (DTCTn.CCE) is set in the transfer control register, a DMAC requests a DMAC transfer count match interrupt when the DMA cycle in which the transfer count compare register and the transfer count have the same value is complete.

When the transfer count match interrupt enable (DTTCTnnn.CCE) is set in the transfer control register, a DTS requests a DTS transfer count match interrupt at the completion of the DMA cycle in which the transfer count compare register and the transfer count have the same value.

Figure 7.1 shows the operation of the transfer completion interrupt and the transfer count match interrupt.

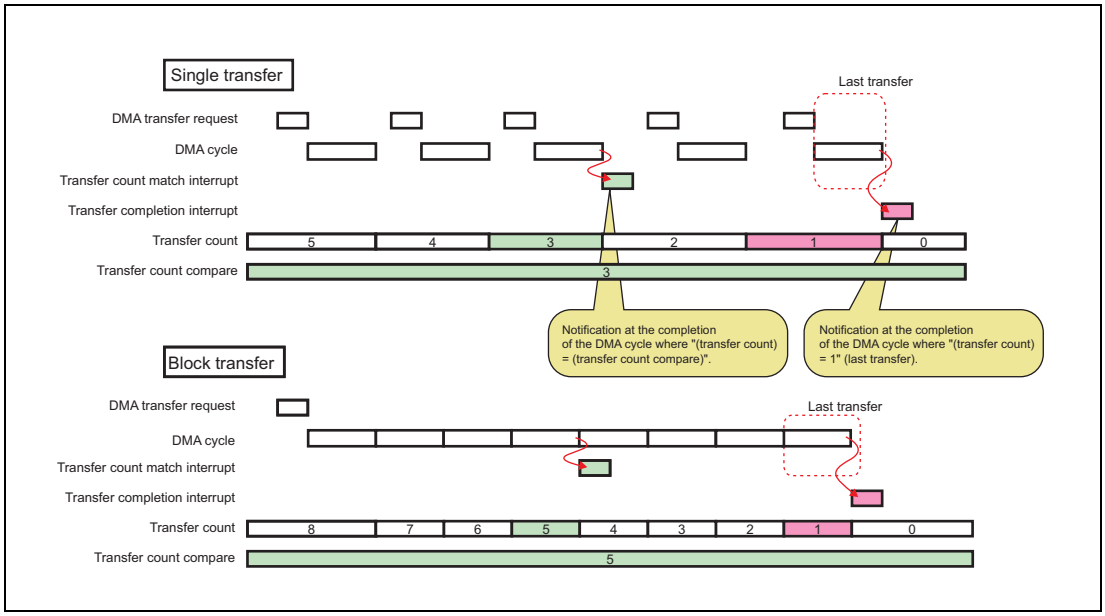

Figure 7.1 Transfer Completion Interrupt and Transfer Count Match Interrupt

7.2.1.6 Continuous Transfer

If the continuous transfer is not used, a DMAC sets the transfer completion flag (DCSTn.TC) and clears the channel operation enable (DCENn.DTE) bit when the last transfer is complete. In this case, a DMA transfer request is not accepted when the request is generated after the completion of the last transfer.

If the continuous transfer is used, the channel operation enable (DCENn.DTE) bit is not cleared when the last transfer is complete, and a DMA transfer request can be accepted even when the transfer completion flag is set. If DMA is used for a case where a specified number of DMA transfers are executed repetitively, software overhead associated with clearing the transfer completion flag and setting the channel operation enable bit after the completion of the last transfer can be reduced by using the continuous transfer.

The continuous transfer is enabled by setting the continuous transfer enable (DTCTn.MLE) in the DMAC transfer control register.

The continuous transfer is designed to work with the reload function 1. The continuous transfer function itself does not update the source address register, destination address register, and transfer count register. If, after the last transfer is complete, you want to restore the source address register, destination address register, and transfer count register to their state before the DMA transfer started, use the reload function 1 and set the values of the source address register, destination address register, and the transfer count register before the DMA transfer starts to the reload source address register, reload destination address register, and reload transfer count register respectively.

A DTS does not have a setting corresponding to the continuous transfer enable (DTCTn.MLE) for a DMAC. This is because a DTS does not have bits like the transfer completion flag (DCSTn.TC) and the channel operation enable (DCENn.DTE) a DMAC has.

A DTS does not start DMA transfer when a DMA transfer request is generated while the transfer count is 0. (This corresponds to the case for a DMAC where the continuous transfer is not used.)

If the reload function 1 is used for a DTS and a value other than 0 is reloaded to the transfer count when the last transfer is complete, DMA transfer can start when the next DMA transfer request is accepted. (This corresponds to the case for a DMAC where the continuous transfer is used.)

Figure 7.2 shows an operation of continuous transfer by a DMAC.

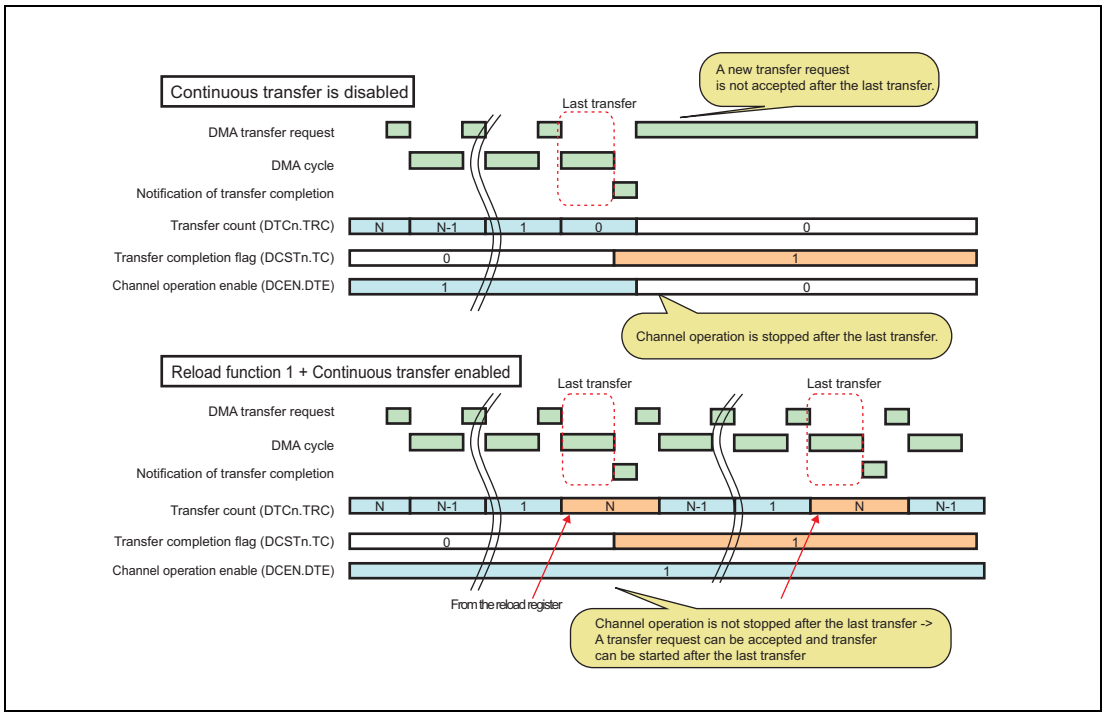

Figure 7.2 Operation of Continuous Transfer by a DMAC

7.2.2 Channel Priority Order

This subsection explains arbitration between multiple DMA channels.

7.2.2.1 DMAC Channel Arbitration

A DMAC selects one channel out of eight channels by arbitration.

Arbitration is done according to a fixed priority order. The priority order is “channel 0 > channel 1 > channel 2 > channel 3 > channel 4 > channel 5 > channel 6 > channel 7” for DMAC0, and “channel 8 > channel 9 > channel 10 > channel 11 > channel 12 > channel 13 > channel 14 > channel 15” for DMAC1.

Arbitration is done for every DMA cycle. No arbitration occurs between the read and write of a DMA cycle.

If, at the time when one DMA cycle in the middle of a block transfer of a channel is complete, there is a DMA transfer request from a channel with a higher priority than the channel, a DMA cycle of the channel with the higher priority will be executed next as the result of arbitration.

If a DMAC executes the block transfer 1 or block transfer 2, DMAC channel arbitration is done for every DMA cycle, and possibly a DMA cycle of another DMAC channel with a higher priority can cut in.

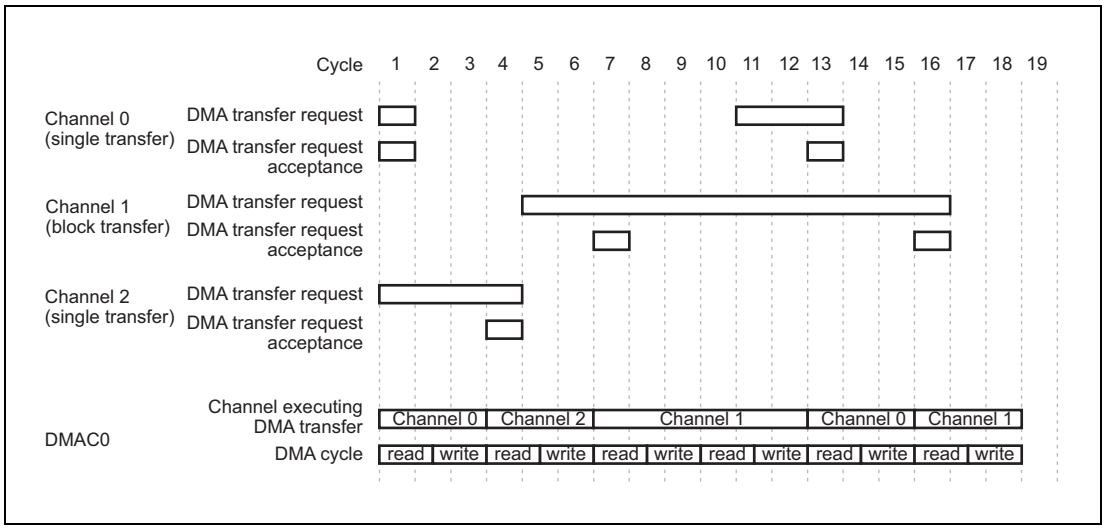

Figure 7.3 DMAC Channel Arbitration

Cycle numbers shown in **Figure 7.3** are for explanation purpose only. They do not indicate an actual number of cycles necessary for executing DMA transfer.

In **Figure 7.3**, DMA transfer requests for channels 0 and 2 are generated at Cycle 1. As a result of arbitration, a DMA cycle for channel 0 starts because its priority is higher. At Cycle 4, a DMA cycle for channel 2 starts. At Cycle 5, a DMA transfer request for channel 1 is generated. The DMA cycle for channel 2 is still ongoing and no arbitration is done at this point. At Cycle 7, a DMA cycle for channel 1 starts. Channel 1 uses block transfer. Another DMA cycle continues at Cycle 10 because there are no DMA transfer requests from other channels. At Cycle 11, a DMA transfer request for channel 0 is generated. The DMA cycle for channel 1 is still ongoing and no arbitration is done at this point. At Cycle 12, the DMA cycle for channel 1 is complete. At Cycle 13, a DMA cycle for channel 0 starts as a result of arbitration between DMA channels 0 and 1.

It should be noted that, even though a block transfer of channel 1 has been already started, a DMA cycle of not channel 1 but channel 0 is executed at Cycle 13 because the priority of the latter is higher.

At Cycle 15, the DMA cycle for channel 0 is complete. At Cycle 16, a DMA cycle for channel 1 starts again. At Cycle 18, the last DMA cycle of the block transfer of channel 1 is complete.

7.2.2.2 DTS Channel Arbitration

If there are DMA transfer requests from multiple DTS channels, the DTSFSL arbitrates those DTS channels. For each DTS channel, a priority can be selected from four levels using DTS channel priority setting registers.

If there are DMA transfer requests from multiple DTS channels, the arbitration is done as follows.

1. A channel with a higher priority level in the setting of DTS channel priority setting registers has priority.
2. If two channels have the same priority level in the setting of DTS channel priority setting registers, a channel with a lower channel number has priority.

The DTSFSL sends the DTS a DMA transfer request for the channel selected by arbitration. The DTS executes DMA transfer when it accepts the DMA transfer request.

Unlike DMA transfer with a DMAC, DMA transfer with a DTS does not allow arbitration between DTS channels in the middle of a block transfer. That means, even if a DMA transfer request with a higher priority comes during a block transfer for a channel with a lower priority, the DMA transfer with a higher priority does not start until the current block transfer for the channel with a lower priority is complete*1.

Note 1. The timing of completion of the block transfer is when the last transfer for the block transfer 1 or the last transfer or address reload transfer for the block transfer 2 occurs.

When a DTS executes the block transfer 1 or block transfer 2, a DMA cycle of a DTS channel with a higher priority does not take over the ongoing block transfer until the last transfer.

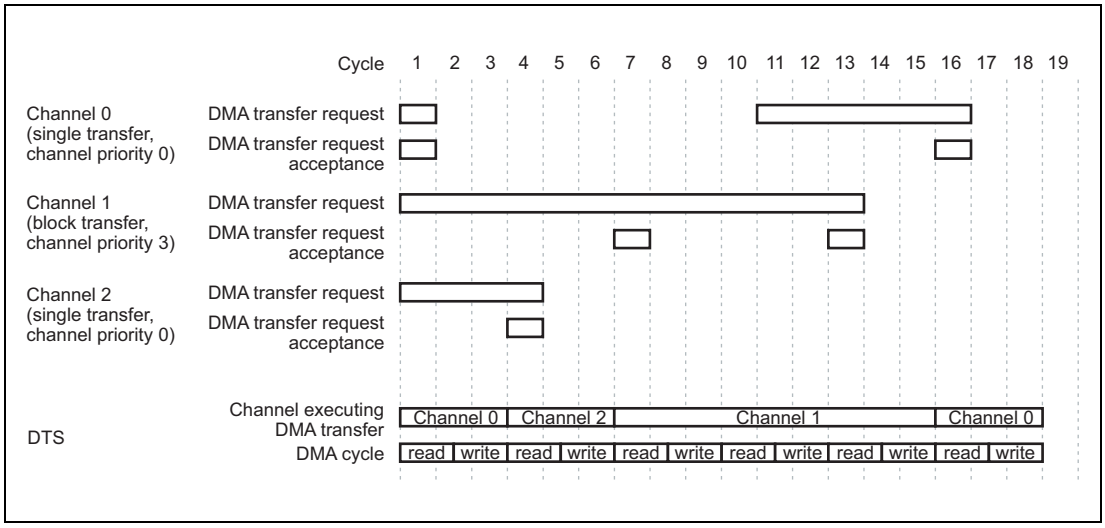

Figure 7.4 DTS Channel Arbitration

Cycle numbers shown in **Figure 7.4** are for explanation purpose only. They do not indicate an actual number of cycles necessary for executing DMA transfer.

In **Figure 7.4**, DMA transfer requests for channels 0, 1, and 2 are generated at Cycle 1. The channel priority for channels 0 and 2 is 0 and is higher than the channel priority for channel 1, which is 3. In addition, if two channels have the same priority, the channel with the smaller channel number has a higher priority. Consequently, the priority order for arbitration is “channel 0 > channel 2 > channel 1”, and a DMA cycle for channel 0 starts because its priority is the highest At Cycle 4, as a result of arbitration between channels 1 and 2, a DMA cycle for channel 2 starts. At Cycle 7, a DMA cycle for channel 1 starts. Channel 1 uses block transfer. Another DMA cycle continues at Cycle 10 because there are no DMA transfer requests from other channels. At Cycle 11, a DMA transfer request for channel 0 is generated. The DMA cycle for channel 1 is still ongoing and no arbitration is done until the block transfer of channel 1 is complete. At Cycle 15, the block transfer of channel 1 is complete. At Cycle 16, a DMA cycle for channel 0 starts.

7.2.2.3 Interface Arbitration

DMAC0, DMAC1, and DTS work independently and execute DMA transfer.

7.2.3 Reload Function

7.2.3.1 Overview of the Reload Function

The reload function updates a portion of transfer information, more specifically, the source address, destination address, transfer count, and address reload count, to the predefined values during DMA transfer.

The reload function has two types of functions: reload function 1 and reload function 2.

7.2.3.2 Operation of Reload Function 1

When the reload function 1 is enabled, actions described in **Table 7.4** are executed at the time of the last transfer according to the reload function 1 setting.

If the last transfer is generated at the same time as the address reload transfer is generated, reload is executed according to the reload function 1 setting.

Table 7.4 Operation of Reload Function 1

Reload Function 1 Setting (DTCTn.RLD1M[1:0])	Register	Action at the Last Transfer
00 (Reload function 1 disabled.)	Source address	Not reloaded.
	Destination address	Not reloaded.
	Transfer count	Not reloaded.
	Address reload count	Not reloaded.
01 (Reload function 1 enabled. Reloading source address and transfer count.)	Source address	The reload source address is copied to this.
	Destination address	Not reloaded.
	Transfer count	The reload transfer count is copied to this.
	Address reload count	• If the reload function 2 is disable: Not reloaded. • If the reload function 2 is enabled: The reload address reload count is copied to this.
10 (Reload function 1 enabled. Reloading destination address and transfer count.)	Source address	Not reloaded.
	Destination address	The reload destination address is copied to this.
	Transfer count	The reload transfer count is copied to this.
	Address reload count	• If the reload function 2 is disable: Not reloaded. • If the reload function 2 is enabled: The reload address reload count is copied to this.
11 (Reload function 1 enabled. Reloading source address, destination address, and transfer count.)	Source address	The reload source address is copied to this.
	Destination address	The reload destination address is copied to this.
	Transfer count	The reload transfer count is copied to this.
	Address reload count	• If the reload function 2 is disable: Not reloaded • If the reload function 2 is enabled: The reload address reload count is copied to this.

Figure 7.5 shows an operation of the reload function 1.

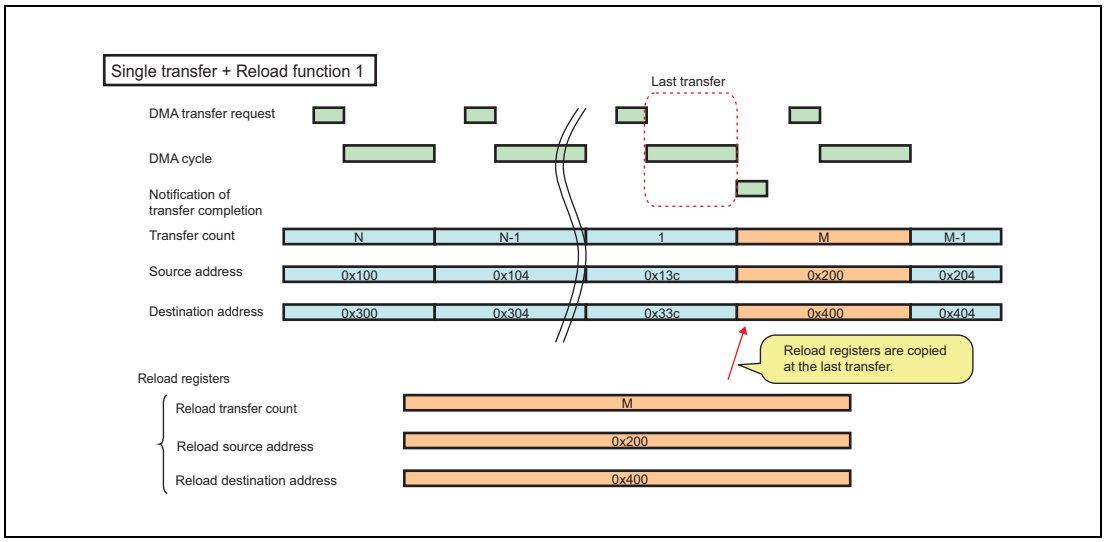

Figure 7.5 Operation of Reload Function 1

7.2.3.3 Reload Function 2

When the reload function 2 is enabled, actions described in **Table 7.5** are executed at the time of the address reload transfer according to the reload function 2 setting.

Table 7.5 Operation of Reload Function 2

Reload Function 2 Setting (DTCTn.RLD2M[1:0])	Register	Action at the Address Reload Transfer
00 (Reload function 2 disabled.)	Source address	Not reloaded.
	Destination address	Not reloaded.
	Address reload count	Not reloaded.
01 (Reload function 2 enabled. Reloading source address.)	Source address	The reload source address is copied to this.
	Destination address	Not reloaded.
	Address reload count	The reload address reload count is copied to this.
10 (Reload function 2 enabled. Reloading destination address.)	Source address	Not reloaded.
	Destination address	The reload destination address is copied to this.
	Address reload count	The reload address reload count is copied to this.
11 (Reload function 2 enabled. Reloading source address and destination address.)	Source address	The reload source address is copied to this.
	Destination address	The reload destination address is copied to this.
	Address reload count	The reload address reload count is copied to this.

Figure 7.6 shows an operation of the reload function 2.

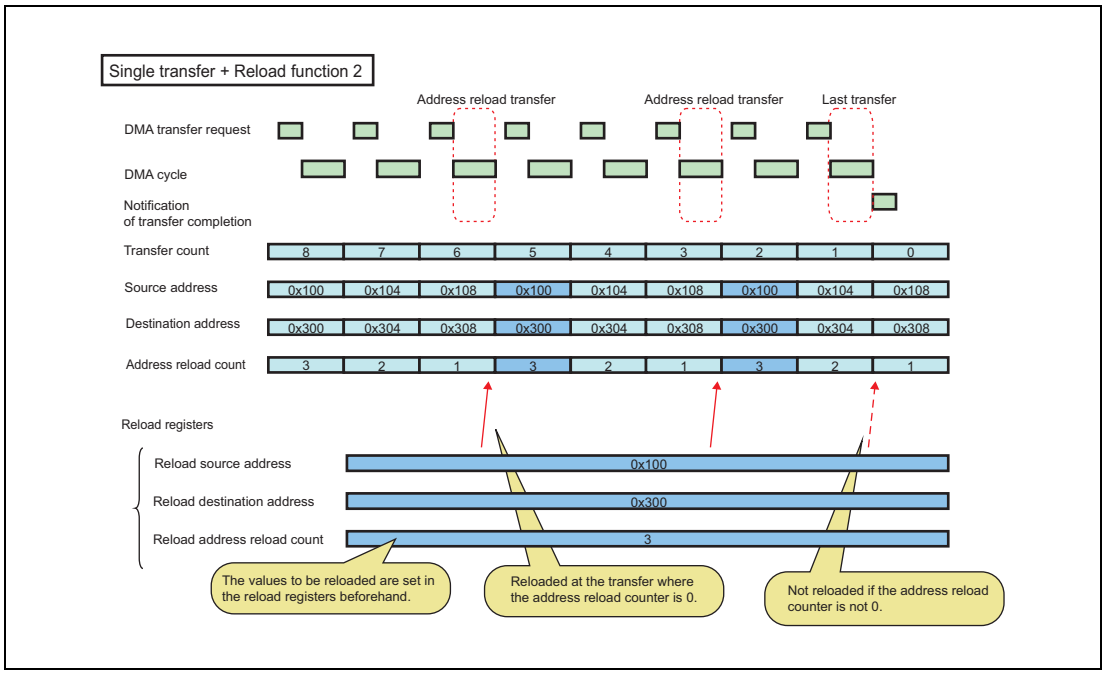

Figure 7.6 Operation of Reload Function 2

Figure 7.7 shows an operation when both the reload function 1 and the reload function 2 are used simultaneously.

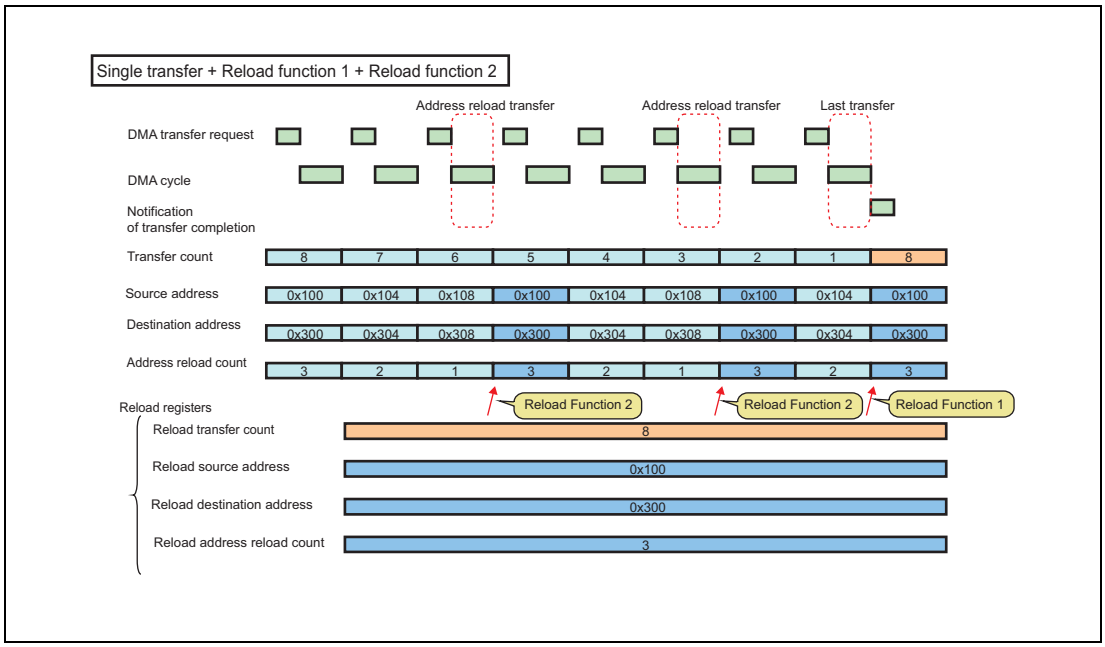

Figure 7.7 Operation when Combining the Reload Function 1 and the Reload Function 2

7.2.3.4 Timing of Setting DMAC Reload Registers

You can set up the reload source address register, reload destination address register, and reload transfer count register any time (even during DMA transfer). As an exception, if you update the reload source address register, reload destination address register, and reload transfer count register during DMA transfer, there may be a conflict between reloading at the last transfer or address reload transfer and updating the reload register. In order to avoid this conflict, setting of reload registers must be completed before the last transfer or address reload transfer starts.

If you need to update the reload source address register, reload destination address register, and reload transfer count register during DMA transfer, one way to know the right timing to update is to use a DMA transfer count match interrupt. In this case, you must set up the DMA transfer count compare register (DTCCn) so that you can have enough margin for the time necessary to update the reload registers.

7.2.3.5 Timing of Setting DTS Reload Information

It should be noted that the right timing for setting up the reload source address information, reload destination address information, and reload transfer count information differs depending on the transfer mode.

In the single transfer mode, the TI fetched at the beginning of the last transfer or address reload transfer is used for reload at the completion of the DMA cycle. Therefore, if you use the reload function for single transfer, the reload source address information, reload destination address information, and reload transfer count information in the TI must be set up before the beginning of the last transfer or address reload transfer.

During block transfer, TI is fetched only at the beginning of DMA transfer. The TI fetched at the beginning of the DMA transfer is used for reload at the last transfer or address reload transfer. Therefore, if you use the reload function for block transfer, the reload source address register, reload destination address information, and reload transfer count information in the TI must be set up before the beginning of the DMA transfer. If you update the reload source address information, reload destination address information, and reload transfer count information in the TI in the middle of a block transfer, those new settings will not be used for reload at the completion of the block transfer.

7.2.4 Chain Function

7.2.4.1 Overview

DMA offers a function called chain function. If you use the chain function, the completion of the DMA cycle or last transfer for one channel can trigger a DMA transfer request for another channel.

A DMA transfer request for another channel initiated by the chain function is called a chain request.

You can select the condition for generating a chain request from the following two options.

- Always chain: A chain request is generated at the completion of every DMA cycle.
- Chain at the last transfer: A chain request is generated at the completion of the last transfer.

Figure 7.8 shows a case of "always chain" operation.

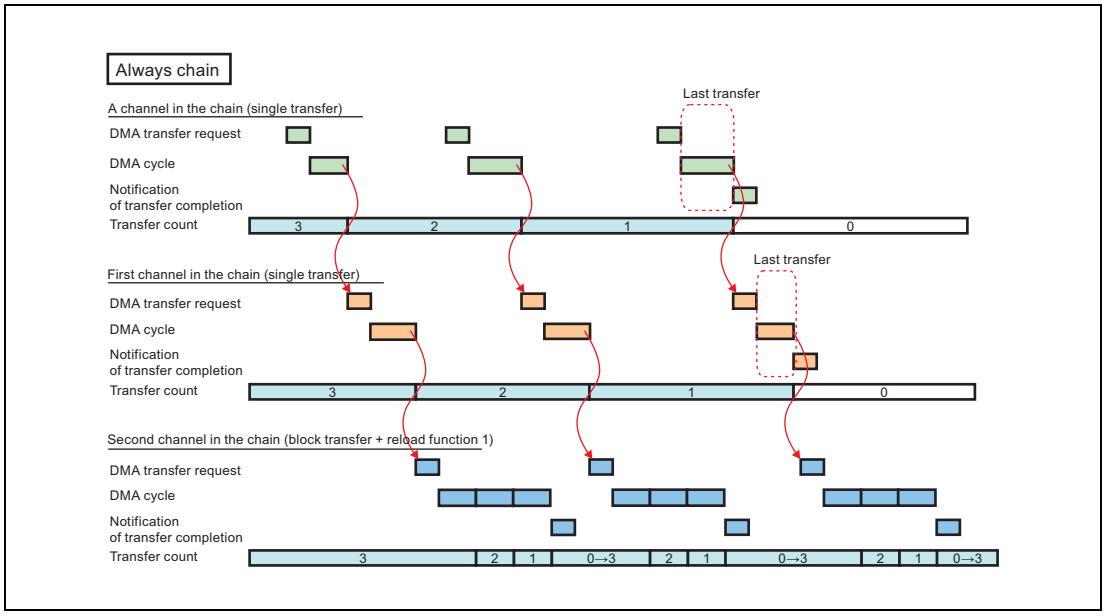

Figure 7.8 Operation of "Always Chain"

Figure 7.9 shows a care of "chain at the last transfer" operation.

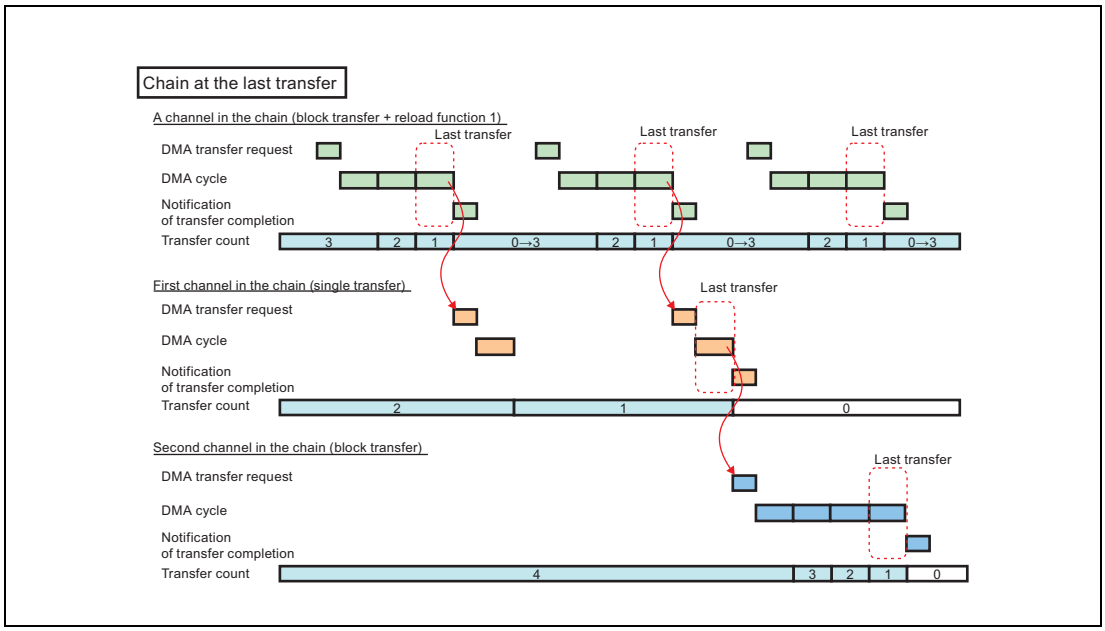

Figure 7.9 Operation of "Chain at the Last Transfer"

7.2.4.2 Setting Up the Chain Function

For a DMAC, you need to write to the chain enable (DTCTn.CHNE) and the next channel in the chain selection (DTCTn.CHNSEL) in the DMAC transfer control register in order to set up the type of chain function and the next channel number in the chain.

For a DTS, you need to write to the chain enable (DTTCTnnn.CHNE) and the next channel in the chain selection (DTTCTnnn.CHNSEL) in the DTS transfer control register in order to set up the type of chain function and the next channel number in the chain.

7.2.4.3 Caution for Using the Chain Function

The chain function sets the software DMA transfer request flag of the next channel in the chain as a part of its function. Therefore, you need to set up the channel settings of the next channel in the chain in the same way as when the software DMA transfer request is used. If you specify a channel using the hardware DMA transfer request for the next channel in the chain, the chain function does not work.

A channel and its next channel in the chain must belong to the same module (DMAC0, DMAC1, and DTS). You cannot specify a channel in another module for its next channel in the chain.

7.2.5 DMAC Operation

7.2.5.1 Types of DMA Transfer Requests and Assigning DMA Transfer Requests

A DMAC starts DMA transfer by accepting a hardware DMA transfer request or software DMA transfer request. The DMA transfer request selection assignment (DRS) bit in the DMAC transfer control register (DTCTn) determines whether a hardware DMA transfer request or a software DMA transfer request is used.

In the case of a hardware DMA transfer request for a DMAC, one out of 128 hardware DMA transfer sources is selected and assigned for each channel of the DMAC in the DTFR. This assignment is configured in the DTFR setting registers.

7.2.5.2 Generating and Accepting a Software DMA Transfer Request

By setting the software DMA transfer request flag (SR) in the DMAC transfer status register (DCSTn) using the DMAC transfer status set register (DCSTSn), a software DMA transfer request can be generated.

The software DMA transfer request flag is automatically cleared when the DMAC processes the DMA transfer request. The timing at which the software DMA transfer request flag is automatically cleared differs depending on the transfer mode of the DMA transfer to be executed.

- In the single transfer mode, the software DMA transfer request flag is cleared whenever the software DMA transfer request is accepted.
- In the block transfer 1 mode, the software DMA transfer request flag is cleared when the last transfer starts.
- In the block transfer 2 mode, the software DMA transfer request flag is cleared when the last transfer or address reload transfer starts.

The software DMA transfer request flag can also be cleared by software using the DMAC transfer status clear register (DTSTCn). When you abort a DMA transfer of a DMAC channel, you must clear the software DMA transfer request flag.

7.2.6 DTS Operation

7.2.6.1 Types of DMA Transfer Requests and Assigning DMA Transfer Requests

A DTS starts DMA transfer by accepting a hardware DMA transfer request or software DMA transfer request.

A transfer request for a DTS is retained in the transfer request pending bit of the DTSFSL for each channel. As for the DTSFSL, both a hardware DMA transfer request and a software DMA transfer request are retained in the same transfer request pending bit. When executing DMA transfer, a DTS does not care whether a DMA transfer request is a hardware DMA transfer request or software DMA transfer request.

In the case of a hardware DMA transfer request for a DTS, each of 128 hardware DMA transfer sources is assigned to one of 128 channels in the DTSFSL in a fixed manner. You cannot change this assignment by, for example, register settings.

7.2.6.2 Generating and Accepting a DMA Transfer Request

When the DTSFSL detects a hardware DMA transfer source input, the DTSFSL sets the transfer request pending bit and retains the hardware DMA transfer source as a DMA transfer request. If the transfer request pending bit is set and the transfer request enable bit (DTFSLnnn.REQEN) in the DTSFSL operation setting register is set, the DTSFSL notifies the DTS of the DMA transfer request.

Software can also generate a DMA transfer request by setting the transfer request pending bit (DTFSTnnn.DRQ) using the DTSFSL transfer request set register (DTFSSnnn).

The DTSFSL can retain only one DMA transfer request per channel. If, while the transfer request pending bit for a channel is set, a new hardware DMA transfer source input for the same channel comes, the new hardware DMA transfer source input is ignored.

When accepting a DMA transfer request, the DTS notifies acceptance of the request.

The transfer request pending bit is automatically cleared when the DTS accepts the DMA transfer request. The DTSFSL clears the transfer request pending bit automatically when the DTS accepts the DMA transfer request regardless of the type of the DMA transfer to be executed by the DTS.

The transfer request pending bit can also be cleared using the DTSFSL transfer request clear register (DTFSCnnn). If the transfer request pending bit of a channel is cleared before the DTS accepts the DMA transfer request, DMA transfer of the channel is not executed.

7.2.6.3 Executing DMA Transfer

When the DTS accepts a DMA transfer request for a channel, the DTS executes DMA transfer of the channel.

If there are DMA transfer requests from multiple channels, the DTSFSL arbitrates the DTS channels and picks up one channel for a DMA transfer request.

While the DTS is executing DMA transfer, the DTS transfer status (DTSSTS.DTSACT) bit in the DTS status register is set. In addition, the channel number of the currently ongoing DMA transfer is set in the DTS transfer channel (DTSSTS.DTSACH). When the DMA transfer is complete or aborted because of DMA transfer error or writing to registers and no channel is currently executing DMA transfer, the DTS transfer status (DTSSTS.DTSACT) bit is cleared.

7.2.6.4 DTSRAM Access

A DTS accesses the DTSRAM when DMA transfer starts and finishes.

A DTS's action of reading transfer information from the DTSRAM when DMA transfer starts is called TI fetch.

A DTS's action of updating the transfer information on the DTSRAM when DMA transfer finishes is called TI write back.

A single transfer performs a TI fetch at the beginning of a DMA cycle and a TI write back at the end of a DMA cycle.

A block transfer performs a TI fetch at the beginning of the first DMA cycle and a TI write back at the end of the DMA cycle that satisfies the block transfer completion condition (the last transfer or address reload transfer).

Therefore, in the case of single transfer, the transfer information on the DTSRAM is updated for each DMA cycle. In the case of block transfer, the transfer information on the DTSRAM is updated after the completion of the block transfer. If software reads the transfer information on the DTSRAM during execution of a block transfer, the transfer information at the beginning of the block transfer is read.

7.3 Suspension, Resume, Transfer Abort, and Clearing a DMA Transfer Request

7.3.1 DMA Suspension and Resume by Software Control

The DMA control register (DMACTL) is used to suspend DMA transfer for all channels.

When the DMA suspension bit (DMACTL.DMASPD) in the DMA control register is set, DMA puts all channels into the suspended state, If all channels are in the suspended state and the DMA suspension bit (DMACTL.DMASPD) in the DMA control register is cleared, DMA restores all channels from the suspended state to the normal state and resumes the DMA transfer of the suspended channel.

When all channels are put into the suspended state, DMA transfer is suspended for all channels without changing the value of the DCENn.DTE bit of each DMAC channel and the DTSCTL1.DTSUST bit of the DTS.

CAUTION

To suspend/resume ongoing DMA transfer in the DTS, enable/disable setting of DMA transfer request enable bit(DTFSLnnn.REQEN) is needed. For the details, see Section 7.3.3, Suspension, Resume, and Transfer Abort of a DTS.

7.3.2 Suspension, Resume, and Transfer Abort of a DMAC Channel

You can suspend the DMA transfer of a DMAC channel by clearing the channel operation enable bit (DCENn.DTE) or setting DMA suspension bit (DMACTL.DMASPD) in the DMA control register in the DMAC channel operation enable setting register for the channel. If a DMA cycle is ongoing, the DMA transfer of a channel is suspended after the currently ongoing DMA cycle is finished. If you set the DCENn.DTE bit or clear DMACTL.DMASPD bit for a channel while the DMA transfer of the channel is suspended, the DMA transfer of the suspended DMAC channel is resumed.

If you want to abort the currently ongoing DMA transfer of a DMAC channel, similarly clear the channel operation enable bit (DCENn.DTE) in the DMAC channel operation enable setting register, and then clear the hardware DMA transfer request in the DTFR in the case of a hardware DMA transfer request, and clear the software DMA transfer request flag (DCSTn.SR) using the DMAC transfer request flag clear bit (DCSTCn.SRC) in the DMAC transfer status clear register in the case of a software DMA transfer request.

CAUTION

If the DCENn.DTE bit is cleared during DMA cycles of the last transfer in continuous transfer (the continuous transfer enable bit of the DMAC transfer control register (DTCTn.MLE) = 1), the setting of the DTCTn.MLE bit is given priority and the DCENn.DTE bit is set again after the completion of the last transfer. To suspend the DMA channel, clear the DTCTn.MLE bit before clearing the DCENn.DTE bit.

Figure 7.10 shows an example of suspension, resume, and transfer abort of a DMAC channel.

In **Figure 7.10**, both channels 0 and 1 are executing block transfer. At time tick 1, DMA transfer of channel 1 starts. At time tick 2, a DMA transfer request for channel 0 is accepted. As a result of DMAC channel arbitration, DMA transfer of channel 0 starts because channel 0 has a higher priority than channel 1. At time tick 3, the last transfer of channel 0 is complete, and the remaining DMA transfer in

the block transfer of channel 1 starts. At time tick 4, the last transfer of channel 1 is complete. After time tick 5, DMA transfer of channel 0 and DMA transfer of channel 1 are executed similarly. At time tick 7, the DMA transfer of channel 0 is suspended and, as a result of DMAC channel arbitration, the DMA transfer of channel 1 starts. At time tick 8, the last transfer of channel 1 is complete, and then, at time tick 9, the DMA transfer of channel 0 resumes. At time tick 10, the last transfer of channel 0 is suspended again, and then, at time tick 11, the DMA transfer of channel 0 is aborted. At time tick 12, the suspended state for channel 0 is cleared, but DMA transfer is not executed because the DMA transfer is aborted at time tick 11.

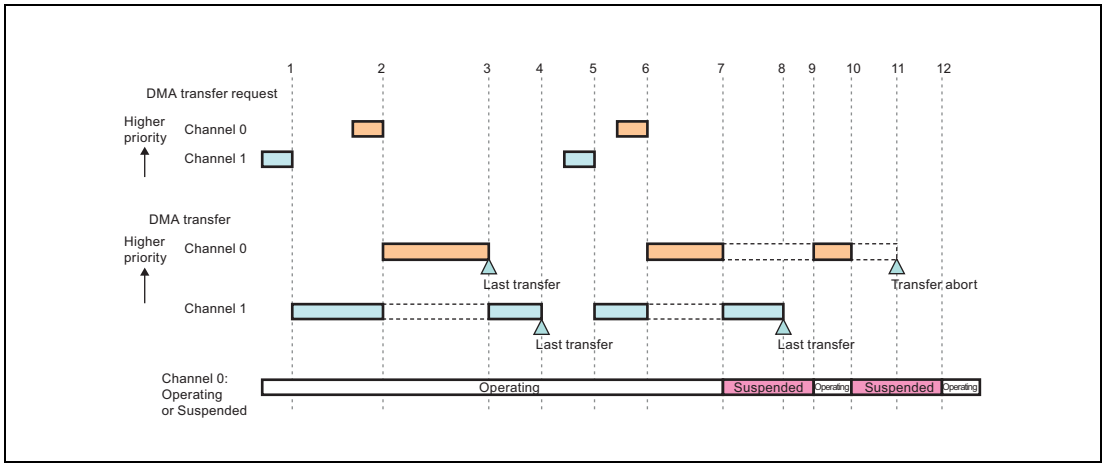

Figure 7.10 Example of Suspension, Resume, and Transfer Abort of a DMAC Channel

7.3.3 Suspension, Resume, and Transfer Abort of a DTS

You can suspend the DMA transfer executed by a DTS by setting the DTS suspend bit (DTSCTL1.DTSUST) or DMA suspension bit in the DMA control register (DMACTL.DMASPD) in the DTS control register 1.*1 If a DMA cycle is ongoing, the DMA transfer is suspended at the time the DMA cycle finishes. If the ongoing DMA cycle is a single transfer or a transfer that completes a block transfer (the last transfer or address reload transfer), the DMA transfer is suspended after a TI write back after the completion of the DMA cycle. If the ongoing DMA cycle is a type other than the above, the DMA transfer is suspended after the completion of the DMA cycle without a TI write back. If you resume the DMA transfer while the DMA transfer is suspended, clear the DTS suspend bit in the DTS control register 1 or DMA suspension bit in the DMA control register.*1

Note 1. To suspend/resume ongoing DMA transfer in the DTS, enable/disable setting of DMA transfer request enable bit (DTFSLnnn.REQEN) is needed. In case of suspension/resume, make sure to follow the procedures.

(a) DTS suspension

1. Clear all DMA transfer request enable bit (DTFSLnnn.REQEN) which DMA transfer request enable bit (DTFSLnnn.REQEN) is set in the DTS channel.
2. Set DTSCTL1.DTSUST bit or DMACTL.DMASPD bit.

(b) DTS resume

1. Set DMA transfer request enable bit (DTFSLnnn.REQEN) in the DTS channel which is cleared in (a) 1.
2. Clear DTSCTL1.DTSUST bit or DMACTL.DMASPD bit which is set in (a) 2.

If you want to abort the currently ongoing DMA transfer executed by a DTS, as described above, make DTS suspended using DTS suspension bit (DTSCTL1.DTSUST) in the DTS control register 1 and then set the DTS transfer abort request bit (DTSCTL2.DTSTIT) in the DTS control register 2 to abort the currently suspended DMA transfer. If transfer is aborted, no TI write back is executed. In addition, aborting the DMA transfer does not change the value of the DTS suspend bit (DTSCTL1.DTSUST). If you want the DTS to accept another DMA transfer request after the abort, set DMA transfer request enable bit (DTFSLnnn.REQEN) and then clear the DTS suspend bit.

Figure 7.11 shows an example of suspension, resume, and transfer abort of a DTS.

In **Figure 7.11**, channels 0, 1, and 2 are executing block transfer. At time tick 1, a DMA transfer request for channel 1 is accepted and DMA transfer starts. At time tick 2, DMA transfer requests for channels 0 and 2 are generated. At time tick 3, the last transfer of channel 1 is complete, and as a result of DTS channel arbitration, a DMA transfer request for channel 0 is accepted, and DMA transfer of channel 0 starts because channel 0 has a higher priority than channel 2. At time tick 4, the last transfer of channel 0 is complete, and DMA transfer of channel 2 starts. At time tick 5, the DTS is put into the suspended state, and the DMA transfer of channel 2 is suspended. At time tick 6, DMA transfer requests for channels 0 and 1 are generated. At time tick 7, the suspended state for the DTS is cleared, and the DMA transfer of channel 2, which has been suspended in the middle of a block transfer, is resumed. If DMA transfer is suspended in the middle of a block transfer, no DTS channel arbitration is done when it is resumed. At time tick 8, the last transfer of channel 2 is complete, and as a result of DTS channel arbitration, a DMA transfer request for channel 0 is accepted and the DMA transfer starts because channel 0 has a higher priority than channel 2. At time tick 9, the DTS is put into the suspended state, and at time tick 10, the suspended DMA transfer of channel is aborted. When the suspended state of the DTS 0 is cleared at time tick 11, DMA transfer of channel 1 starts because there is no currently ongoing DMA transfer and channel 1 is the only channel with a DMA transfer request.

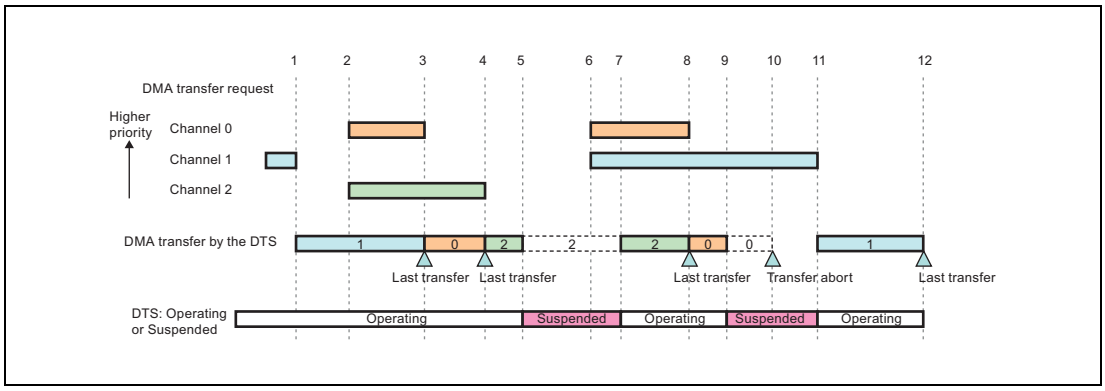

Figure 7.11 Example of Suspension, Resume, and Transfer Abort of a DTS

7.3.4 Masking and Clearing a Hardware DMA Transfer Request by the DTFR

If a DMAC uses a hardware DMA transfer request, you can temporarily disable (mask) the hardware DMA transfer request output from the DTFR to the DMAC by clearing the hardware DMA transfer source selection enable bit (DTFRn.REQEN) in the DTFR setting register.

Also, if a hardware DMA transfer source is used, you can clear a hardware DMA transfer request retained in the DTFR by using the hardware DMA transfer request clear (DTFRRQCn.DRQC) bit in the DTFR transfer request clear register.

Even if you suspend or abort DMA transfer of a DMAC channel, the hardware DMA transfer request selection/hold circuit of the DTFR is still running, and consequently, the DTFR may retain a hardware DMA transfer request that came to the DTFR during the suspension or transfer abort period of the DMAC channel. When you resume or start DMA transfer of a DMAC channel, clear the hardware DMA transfer request retained in the DTFR as required.

If a DMAC is used with the settings for a hardware transfer request and block transfer (1 or 2), a block transfer in progress will be aborted if the hardware transfer source selection bit of the DTFR is disabled by software (DTFRn.REQEN = 0).

7.3.5 Masking and Clearing a Hardware DMA Transfer Request by the DTSFSL

As for a DTS, you can temporarily disable (mask) a DMA transfer request from a channel to the DTS by clearing the transfer request enable bit (DTFSLnnn.REQEN) in the DTSFSL operation setting register. (The masking is actually done by excluding the channel from the candidates in DTS channel arbitration in the DTSFSL.)

Also, you can clear a DMA transfer request retained in the DTSFSL by using the transfer request clear (DTFSCnnn.DRQC) bit in the DTSFSL transfer request clear register.

Regardless of the state of the DTS and the transfer request enable bit (DTFSLnnn.REQEN) of the DTSFSL, the DTSFSL always monitors the hardware transfer source input from outside, and a DMA transfer request for a channel is set when a hardware transfer source for the channel is input to the DTSFSL. When you resume or start DTS transfer, clear the hardware DMA transfer request retained in the DTSFSL as required.

7.3.6 List of Suspend, Resume, and Transfer Abort Functions

Table 7.6 List of Suspend, Resume, and Transfer Abort Functions

Function	How to execute the function	Operation	Possibility of DMA transfer abort	Master that can execute the function (See Section 7.5, Reliability Function.)
DMA suspension and resume by software control	Setting and clearing the DMACTL.DMASPD.*2	All channels are in the suspended state.	Not possible*1	Special master
Suspension and resume of a DMAC channel	Clearing and setting the DCENn.DTE in each channel register.*3	DMA transfer of a channel is suspended.	Possible (by clearing the DMA transfer request flag during suspension)	Special master, and general master assigned to the channel.
Suspension and resume of a DTS	Setting and clearing the DTSCTL1.DTSUST.*2	DMA transfer of a DTS is suspended.	Possible (by setting the DTSCTL2.DTSTIT during suspension)	Special master

Note 1. In order to abort DMA transfer, you need to either abort transfer for the DMAC channel or abort transfer for the DTS.

Note 2. To suspend/resume ongoing DMA transfer in the DTS, enable/disable setting of DMA transfer request enable bit (DTFSLnnn.REQEN) is needed. For the details, see **Section 7.3.3, Suspension, Resume, and Transfer Abort of a DTS**.

Note 3. To suspend or resume the DMA channel during transfer in continuous transfer, change the value of the DTCTn.MLE bit before changing the value of the DCENn.DTE bit.

7.4 Error Control

7.4.1 Type of Error

DMA can generate the following two types of errors.

- DMA Transfer Error
  This error is generated when error is detected in the read cycle or write cycle in a DMA cycle.
  This error can be generated in all DMAC and DTS channels during execution of DMA transfer.
- DTSRAM Error
  This error is generated when ECC error is detected in the DTSRAM read access by a DTS.
  This error can be generated in the TI fetch during execution of DMA transfer for a DTS or while software is accessing the DTS channel registers.

7.4.2 DMA Transfer Error

7.4.2.1 Operation of a DMAC When DMA Transfer Error Occurs

When DMA transfer error occurs in a DMAC, the transfer error flag (DCSTn.ER) in the DMAC transfer status register of the channel with the DMA transfer error. The DMAC error register (DMACER) shows the transfer error flags of all 16 DMAC channels.

While the transfer error flag of a channel is set, a new DMA cycle is not executed if the transfer error case DMA transfer disable setting (DTCTn.ESE) bit is set. On the other hand, a DMA cycle is executed regardless of the value of the transfer error flag if the transfer error case DMA transfer disable setting (DTCTn.ESE) bit is cleared.

If you want to abort the DMA transfer of a channel with DMA transfer error, follow the procedure to abort DMA transfer of the DMAC channel.

If DMA transfer error occurs during the read cycle of a DMA cycle, the write cycle is not executed. If DMA transfer error occurs during the write cycle of a DMA cycle, the validity of the write is not guaranteed.

Regardless of whether DMA transfer error occurs in the read cycle or write cycle of a DMA cycle, the source address, destination address, transfer count, and address reload count registers are updated.

7.4.2.2 Operation of a DTS When DMA Transfer Error Occurs

When DMA transfer error occurs in a DTS, the DTS error flag (DTSER1.DTSER) in the DTS error register is set, and the DTS channel number with the DMA transfer error is stored in the DTS error channel (DTSER1.DTSERCH) in the same register.

If DMA transfer error occurs in a single transfer, a TI write back is executed to finish the DMA cycle.

If DMA transfer error occurs in the middle of a block transfer and the transfer error case DMA transfer abort setting (DTTCTnnn.ESE) is set, the remaining DMA cycles in the block transfer are not executed, but a TI write back is executed to finish the DMA cycle. At the same time, the DTS transfer status (DTSSTS.DTSACT) bit in the DTS status register is cleared. If DMA transfer error occurs in the middle of a block transfer and the transfer error case DMA transfer abort setting (DTTCTnnn.ESE) is cleared, the block transfer continues regardless of the DMA transfer error.

If DMA transfer error occurs during the read cycle of a DMA cycle, the write cycle is not executed. If DMA transfer error occurs during the write cycle of a DMA cycle, the validity of the write is not guaranteed.

Regardless of whether DMA transfer error occurs in the read cycle or write cycle of a DMA cycle, the source address, destination address, transfer count, and address reload count registers are updated, and the TI is updated by a TI write back.

If the DTS error flag in the DTS error register is set, a TI fetch is executed when the DTS accepts a DMA transfer request for the channel with the same channel number as the one stored in the DTS error channel. If, as a result of the TI fetch, the transfer error case DMA transfer abort setting (DTTCTnnn.ESE) is found to be set, a DMA cycle and a TI write back are not executed. If the transfer error case DMA transfer abort setting (DTTCTnnn.ESE) is cleared, DMA transfer is executed.

If the DTS error flag in the DTS error register is set, DMA transfer is executed when the DTS accepts a DMA transfer request for a channel with a channel number other than the one stored in the DTS error channel.

7.4.3 DTSRAM Error

There are two types of DTSRAM errors detected in the DTSRAM read access: 1-bit ECC errors and 2-bit ECC errors.

If a 1-bit ECC error is detected during a TI fetch, error corrected data is used, and DMA transfer continues. If a 1-bit ECC error is detected during DTS channel register access from software, error corrected data is returned as read data. In either case, the DTSRAM 1-bit error flag (DTSER2.RAMSEC) in the DTS error register 2 is set, and the address of the error location in the DTSRAM is stored to the DTSRAM 1-bit error address (DTSER2.RAMSECAD). In addition, the error is notified to the ECM.

If a 2-bit ECC error is detected during a TI fetch, handling of the DMA transfer request is terminated without executing a DMA cycle and TI write back. If a 2-bit ECC error is detected during DTS channel register access from software, peripheral bus error is notified. In either case, the DTSRAM 2-bit error flag (DTSER2.RAMDED) in the DTS error register 2 is set, and the address of the error location in the DTSRAM is stored to the DTSRAM 2-bit error address (DTSER2.RAMDEDAD). In addition, the error is notified to the ECM.

7.5 Reliability Function

7.5.1 Overview

In this product, DMA offers the following reliability functions.

- Register access protection function
- Master information inherit function

7.5.2 Register Access Protection Function

The register access protection function allows access to the transfer information of each DMA channel from the master assigned to the channel but prohibits access from other masters.

The register access protection function enables you, for example, to prevent the settings of the channel from being read or updated by masters other than the one assigned to the channel.

7.5.2.1 Identifying the Accessing Master

DMA identifies a master based on the ID of the accessing CPU (PEID), or whether the CPU is in the supervisor mode (PSW.UM = 0) or in the user mode (PSW.UM = 1).

7.5.2.2 Special Master Access

DMA treats access from the CPU1 supervisor mode as special master access.

7.5.2.3 General Master Access

DMA treats accesses except special master access as general master access.

In general master access, access to the following registers is allowed.

- The following global registers
  DMACER, DTSER1, DTSER2, and DTSSTS
- Channel registers of the channels assigned by the channel assignment. (For details, see **Section 7.5.2.4, Channel Assignment**.)

In general master access, access to registers other than the above is not allowed.

7.5.2.4 Channel Assignment

To each channel, DMA can assign a master so that the master is allowed to use the channel. Channel assignment is configured in the channel setting register (DMnnCM in the case of a DMAC and DTSnnnCM in the case of a DTS) by the CPU1 in the supervisor mode (PSW.UM = 0).

In general master access, the master assigned to a channel by channel assignment is allowed to access the channel registers of the channel. If the channel registers of a channel is accessed by a master other than the master assigned to the channel, the access is called illegal access. For information about illegal access, see **Section 7.5.2.5, Illegal Access**.

7.5.2.5 Illegal Access

DMA handles the following access as illegal access.

(a) General master access to the global registers
Except the following registers: DMACER, DTSER1, DTSER2, and DTSSTS

(b) General master access to the channel registers of a channel by a master other than the master assigned to the channel

DMA's actions against illegal access are as follows.

For both cases (a) and (b),

- Write access is ignored.
- Read access returns 0 as read data.

Only for case (b),

- The information about the illegal access is stored in a register access protection violation register. The DMAC0, DMAC1, and DTS have their own register access protection violation registers (DM0CMV, DM1CMV, and DTSCMV respectively).
- A generation of illegal access is notified to ECM.

Only the special master can access the register access protection violation registers. The special master can check whether illegal access has occurred by checking the register access protection violation registers periodically.

In addition, it is recommended that, when a master tries to use DMA and configures transfer information in the channel registers, the master should check whether the configuration has been successfully completed without illegal access by, for example, reading back the settings.

7.5.3 Master Information Inherit Function

In this device, DMA access inherits master information that is equivalent to the master information of the CPU assigned to the DMA channel.

The master information that is output from DMA is as in **Table 7.7**.

Table 7.7 Master Information That Is Output from DMA

Meaning	Value that is output from DMA
UM	Same as the UM bit value in the channel master setting register
SPID	Same as the SPID bit value in the channel master setting register
PEID	Same as the PEID bit value in the channel master setting register
DMA access	1

7.5.4 Other Reliability Functions

7.5.4.1 Restriction on the Next Channel in the Chain

The reliability function limits the channels you can select as the next channel in the chain.

When you use the chain function, the channel master settings of a channel and its next channel in the chain must be the same.

The chain function is designed so that a channel and its next channel in the chain are managed by the same master.

When DMA detects that different masters are assigned to a channel and its next channel in the chain, it is deemed illegal and the chain function is suppressed. More specifically, when DMA tries to execute the chain function, DMA compares the chain master settings of the channel and its next channel in the chain, and if the settings are the same for both PEID and UM, the chain function is allowed and a chain request is sent to the next channel. If the settings are not the same for either PEID or UM, chain request is not sent.

7.6 Setting Up DMA Transfer

7.6.1 Overview of Setting Up DMA

Table 7.8 Channel Assignment

No.	Master that configures the setting	Description	Register		Necessity of the setting
1	Special master (CPU1 in the supervisor mode)	Overall DMA operation setting	DTSPR0 to DTSPR7	DTS channel priority setting	Mandatory (if a DTS is used)
2			DM00CM to DM07CM, DM10CM to DM17CM	DMAC channel master setting	Mandatory (if a DMAC is used)
3			DTS0CM to DTS127CM	DTS channel master setting	Mandatory (if a DTS is used)
4		Status clear	DTSERC	DTS error clear register	Recommended
5			CMVC	Channel protection violation clear register	Recommended
6	Master assigned to the DMAC channel	Channel setting	DSAn	DMAC source address	Mandatory
7			DDAn	DMAC destination address	Mandatory
8			DTCn	DMAC transfer count	Mandatory
9			DTCTn	DMAC transfer control	Mandatory
10			DRSAn	DMAC reload source address	Mandatory if the reload function is used
11			DRDAn	DMAC reload destination address	Mandatory if the reload function is used
12			DRTCn	DMAC reload transfer count	Mandatory if the reload function is used
13			DTCCn	DMAC transfer count compare	Mandatory if the transfer count match interrupt is used
14			DTFRn	DTFR setting register	Mandatory
15		Status clear	DCSTCn	DMAC transfer status clear	Mandatory
16			DTFRRQCn	DTFR transfer request clear	Recommended
17		Channel operation enable	DCENn	DMAC channel operation enable setting	Mandatory
18	Master assigned to the DTS channel	Channel setting	DTSAnnn	DTS source address	Mandatory
19			DTDAnnn	DTS destination address	Mandatory
20			DTTCnnn	DTS transfer count	Mandatory
21			DTTCTnnn	DTS transfer control	Mandatory
22			DTRSAnnn	DTS reload source address	Mandatory if the reload function is used
23			DTRDAnnn	DTS reload destination address	Mandatory if the reload function is used
24			DTRTCnnn	DTS reload transfer count	Mandatory if the reload function is used
25			DTTCCnnn	DTS transfer count compare	Mandatory if the transfer count match interrupt is used
26		Status clear	DTFSCnnn	DTSFSL transfer request clear	Recommended
27		Transfer request enable	DTFSLnnn	DTSFSL operation setting	Mandatory

7.6.2 Setting Up the Overall DMA Operation

You need to set up the overall DMA operation before you start using DMA.

To configure the overall DMA operation, the special master (a CPU1 in the supervisor mode (PSW.UM = 0)) needs to set up global registers. Global registers can be set up only by special master access. For details, see **Section 7.5, Reliability Function**.

The following registers must be set up to configure the overall DMA operation.

- DTS channel priority setting registers (DTSPRn, n = 0 to 7)
  Those registers configure the priority level of each DTS channel used for DTS channel arbitration.
- DMAC channel master setting registers (DMnnCM)
- DTS channel master setting registers (DTSnnnCM)
  Those registers configure channel assignment. (For details, see **Section 7.5, Reliability Function**.)

If the DMAC channel master setting registers and the DTS channel master setting registers are not properly set, DMA channel setting and DMA transfer cannot be executed properly.

Also, if errors are detected in the following registers while the overall DMA operation is set up, clearing the errors is recommended.

- DTS error register 1 (DTSER1)
- DTS error register 2 (DTSER2)
- DMAC0 register access protection violation register (DM0CMV)
- DMAC1 register access protection violation register (DM1CMV)
- DTS register access protection violation register (DTSCMV)

7.6.3 Setting Up the DMA Channel Setting

The DMA channel setting defines the transfer information and transfer source for each DMAC and DTS channel.

To configure the DMA channel setting, the master assigned to each channel by the channel assignment needs to set up channel registers.

7.6.3.1 Setting Up the DMAC Channel Setting

Follow the procedure below to set up the DMAC channel setting and use the DMAC.

(1) Disabling the DMAC Channel Operation

If the channel operation enable (DTE) in the DMAC channel operation enable setting register (DCENn) is set, clear the DTE bit to disable the channel operation.

(2) Setting Up the Transfer Information

When you set up the transfer information of the DMAC, the following registers need to be set up.

- DMAC source address register (DSAn)
- DMAC destination address register (DDAn)
- DMAC transfer count register (DTCn)
- DMAC transfer control register (DTCTn)
- DMAC reload source address register (DRSAn)
- DMAC reload destination address register (DRDAn)
- DMAC reload transfer count register (DRTCn)
- DMAC transfer count compare register (DTCCn)

(3) Setting Up the DMA Transfer Request

While setting the transfer information, you need to set up the DMA transfer request selection assignment (DTCTn.DRS) bit in the DMAC transfer control register (DTCTn) to define whether the hardware or software DMA transfer request is used.

You cannot use both the hardware and software DMA transfer requests for the same channel at the same time.

If you use the hardware DMA transfer request, you need to select one source used as the hardware DMA transfer request out of 128 hardware DMA transfer sources using the hardware DMA transfer source selection (DTFRn.REQSEL) in the DTFR setting register. Also, you need to enable the hardware DMA transfer source selection (DTFRn.REQEN) in the same register.

The DTFR may retain a hardware DMA transfer request that came before the hardware DMA transfer source is selected. Clear the hardware DMA transfer request (DTFRRQn.DRQ) retained in the DTFR using the DTFR transfer request clear register (DTFRRQCn) if necessary.

If you use the software DMA transfer request, disable the hardware DMA transfer source selection (DTFRn.REQEN) in the DTFR setting register.

(4) Clearing the Transfer Status

The DMAC transfer status register (DCSTn) may retain the result of the previous DMA transfer. You need to clear the flags in the DMAC transfer status register using the DMAC transfer status clear register (DCSTCn).

(5) Enabling the DMAC Channel Operation

Set the channel operation enable (DCENn.DTE) bit in the DMAC channel operation enable setting register to enable the channel operation.

After the channel operation enable bit is set, the DMAC can accept a DMA transfer request and start DMA transfer.

7.6.3.2 Setting Up the DTS Channel Setting

Follow the procedure below to set up the DTS channel setting and use the DTS.

(1) Disabling the Transfer Request by the DTSFSL

Clear the transfer request enable (DTFSLnnn.REQEN) bit in the DTSFSL operation setting register of the DTS channel you want to set up the channel setting for. This procedure is not mandatory but recommended in order to prevent a DMA transfer request from being sent mistakenly to the DTS channel currently being configured.

It is also recommended to check the DTS status register (DTSSTS) and confirm that DMA transfer is not ongoing for the DTS channel currently being configured.

(2) Setting Up the Transfer Information

When you set up the transfer information of the DTS, the following registers need to be set up to configure the transfer information.

- DTS source address register (DTSAnnn)
- DTS destination address register (DTDAnnn)
- DTS transfer count register (DTTCnnn)
- DTS transfer control register (DTTCTnnn)
- DTS reload source address register (DTRSAnnn)
- DTS reload destination address register (DTRDAnnn)
- DTS reload transfer count register (DTRTCnnn)
- DTS transfer count compare register (DTTCCnnn)

(3) Setting Up the DMA Transfer Request

Unlike a DMAC, a DTS does not care whether a DMA transfer request is a hardware DMA transfer request or software DMA transfer request. A DTS has a transfer request pending bit for each channel in the DTSFSL, and both hardware and software DMA transfer requests are retained in the same transfer request pending bit (DTFSTnnn.DRQ). Therefore, a DTS has no setting for selecting whether the hardware or software transfer request is used.

The DTSFSL may retain a DMA transfer request that came before the transfer information is set up. Clear the DMA transfer request (DTFSTnnn.DRQ) retained in the DTSFSL if necessary, using the DTSFSL transfer request clear register (DTFSCnnn).

(4) Enabling the Transfer Request by the DTSFSL

Set the transfer request enable (DTFSLnnn.REQEN) bit in the DTSFSL operation setting register to enable the DMA transfer request for the DTS channel.

After the transfer request enable bit for the DTSFSL is set, the DTS can accept a DMA transfer request and start DMA transfer.

7.7 DMA Trigger Source

7.7.1 List of DMA Trigger Sources

The DMA trigger source assignment for DMA channel n is set in the DTFR setting register (DTFRn).

Table 7.9 List of DMA Trigger Sources (1/4)

Channel	Interrupt Name	Module	DMA Trigger Source
0	INTP9	PORT	External interrupt
1	INTTAUJ0I0	TAUJ0	TAUJ0 CH0 interrupt
2	INTTAUJ0I1		TAUJ0 CH1 interrupt
3	INTTAUJ0I2		TAUJ0 CH2 interrupt
4	INTTAUJ0I3		TAUJ0 CH3 interrupt
5	INTTAUJ1I0	TAUJ1	TAUJ1 CH0 interrupt
6	INTTAUJ1I1		TAUJ1 CH1 interrupt
7	INTTAUJ1I2		TAUJ1 CH2 interrupt
8	INTTAUJ1I3		TAUJ1 CH3 interrupt
9	INTTAUJ2I0	TAUJ2	TAUJ2 CH0 interrupt
10	INTTAUJ2I1		TAUJ2 CH1 interrupt
11	INTTAUJ2I2		TAUJ2 CH2 interrupt
12	INTTAUJ2I3		TAUJ2 CH3 interrupt
13	INTTAUD0I0	TAUD0	TAUD0 CH0 interrupt
14	INTTAUD0I1		TAUD0 CH1 interrupt
15	INTTAUD0I2		TAUD0 CH2 interrupt
16	INTTAUD0I3		TAUD0 CH3 interrupt
17	INTTAUD0I4		TAUD0 CH4 interrupt
18	INTTAUD0I5		TAUD0 CH5 interrupt
19	INTTAUD0I6		TAUD0 CH6 interrupt
20	INTTAUD0I7		TAUD0 CH7 interrupt
21	INTTAUD0I8		TAUD0 CH8 interrupt
22	INTTAUD0I9		TAUD0 CH9 interrupt
23	INTTAUD0I10		TAUD0 CH10 interrupt
24	INTTAUD0I11		TAUD0 CH11 interrupt
25	INTTAUD0I12		TAUD0 CH12 interrupt
26	INTTAUD0I13		TAUD0 CH13 interrupt
27	INTTAUD0I14		TAUD0 CH14 interrupt
28	INTTAUD0I15		TAUD0 CH15 interrupt
29	INTTAUD1I0	TAUD1	TAUD1 CH0 interrupt
30	INTTAUD1I1		TAUD1 CH1 interrupt
31	INTTAUD1I2		TAUD1 CH2 interrupt
32	INTTAUD1I3		TAUD1 CH3 interrupt
33	INTTAUD1I4		TAUD1 CH4 interrupt
34	INTTAUD1I5		TAUD1 CH5 interrupt
35	INTTAUD1I6		TAUD1 CH6 interrupt
36	INTTAUD1I7		TAUD1 CH7 interrupt
37	INTTAUD1I8		TAUD1 CH8 interrupt
38	INTTAUD1I9		TAUD1 CH9 interrupt

Table 7.9 List of DMA Trigger Sources (2/4)

Channel	Interrupt Name	Module	DMA Trigger Source
39	INTTAUD1I10	TAUD1	TAUD1 CH10 interrupt
40	INTTAUD1I11		TAUD1 CH11 interrupt
41	INTTAUD1I12		TAUD1 CH12 interrupt
42	INTTAUD1I13		TAUD1 CH13 interrupt
43	INTTAUD1I14		TAUD1 CH14 interrupt
44	INTTAUD1I15		TAUD1 CH15 interrupt
45	INTTAUD2I0	TAUD2	TAUD2 CH0 interrupt
46	INTTAUD2I1		TAUD2 CH1 interrupt
47	INTTAUD2I2		TAUD2 CH2 interrupt
48	INTTAUD2I3		TAUD2 CH3 interrupt
49	INTTAUD2I4		TAUD2 CH4 interrupt
50	INTTAUD2I5		TAUD2 CH5 interrupt
51	INTTAUD2I6		TAUD2 CH6 interrupt
52	INTTAUD2I7		TAUD2 CH7 interrupt
53	INTTAUD2I8		TAUD2 CH8 interrupt
54	INTTAUD2I9		TAUD2 CH9 interrupt
55	INTADCD0I0	ADCD0	ADCD0 SG0 end interrupt
56	INTADCD0I1		ADCD0 SG1 end interrupt
57	INTADCD0I2		ADCD0 SG2 end interrupt
58	INTADCD0I3		ADCD0 SG3 end interrupt
59	INTADCD0I4		ADCD0 SG4 end interrupt
60	INTADCD1I0	ADCD1	ADCD1 SG0 end interrupt
61	INTADCD1I1		ADCD1 SG1 end interrupt
62	INTADCD1I2		ADCD1 SG2 end interrupt
63	INTADCD1I3		ADCD1 SG3 end interrupt
64	INTADCD1I4		ADCD1 SG4 end interrupt
65	INTCSIH0IR0S	CSIH0	CSIH0 receive status/CS0 receive status interrupt
66	INTCSIH0IC0S		CSIH0 communication status/CS0 communication status interrupt
67	INTCSIH0IR1		CSIH0 CS1 receive status interrupt
68	INTCSIH0IC1		CSIH0 CS1 communication status interrupt
69	INTCSIH0IR2		CSIH0 CS2 receive status interrupt
70	INTCSIH0IC2		CSIH0 CS2 communication status interrupt
71	INTCSIH0IJC		CSIH0 JOB completion interrupt
72	INTCSIH1IR0S	CSIH1	CSIH1 receive status/CS0 receive status interrupt
73	INTCSIH1IC0S		CSIH1 communication status/CS0 communication status interrupt
74	INTCSIH1IR1		CSIH1 CS1 receive status interrupt
75	INTCSIH1IC1		CSIH1 CS1 communication status interrupt
76	INTCSIH1IR2		CSIH1 CS2 receive status interrupt
77	INTCSIH1IC2		CSIH1 CS2 communication status interrupt
78	INTCSIH1IJC		CSIH1 JOB completion interrupt
79	INTCSIH2IR0	CSIH2	CSIH2 receive status
80	INTCSIH2IC0		CSIH2 communication status
81	INTCSIH2IJC		CSIH2 JOB completion interrupt

Table 7.9 List of DMA Trigger Sources (3/4)

Channel	Interrupt Name	Module	DMA Trigger Source
82	INTCSIH3IR0	CSIH3	CSIH3 receive status
83	INTCSIH3IC0		CSIH3 communication status
84	INTCSIH3IJC		CSIH3 JOB completion interrupt
85	INTCSIG0IR	CSIG0	CSIG0 receive status interrupt
86	INTCSIG0IC		CSIG0 transmit status interrupt
87	INTSCI30RXI	SCI30	SCI30 receive data full
88	INTSCI30TXI		SCI30 communication data empty
89	INTSCI31RXI	SCI31	SCI31 receive data full
90	INTSCI31TXI		SCI31 communication data empty
91	INTSCI32RXI	SCI32	SCI32 receive data full
92	INTSCI32TXI		SCI32 communication data empty
93	INTADCD0MPX	ADCD0	ADCD0 MPX interrupt request
94	INTADCD1MPX	ADCD1	ADCD1 MPX interrupt request
95	INTRLIN30UR1	RLIN30	RLIN30 receive interrupt
96	INTRLIN30UR0		RLIN30 transmit interrupt
97	INTRLIN31UR1	RLIN31	RLIN31 receive interrupt
98	INTRLIN31UR0		RLIN31 transmit interrupt
99	INTTSG30I11	TSG30	TSG30 compare match interrupt 11
100	INTTSG30I12		TSG30 compare match interrupt12
101	INTTSG30IPEK		TSG30 peak interrupt
102	INTTSG30IVLY		TSG30 valley interrupt
103	INTTSG31I11	TSG31	TSG31 compare match interrupt 11
104	INTTSG31I12		TSG31 compare match interrupt 12
105	INTTSG31IPEK		TSG31 peak interrupt
106	INTTSG31IVLY		TSG31 valley interrupt
107	INTENCA0I0	ENCA0	ENCA0 match/capture interrupt 0
108	INTENCA0I1		ENCA0 match/capture interrupt 1
109	INTENCA1I0	ENCA1	ENCA1 match/capture interrupt 0
110	INTENCA1I1		ENCA1 match/capture interrupt 1
111	INTTPBA0IPRD	TPBA0	Period match detection interrupt
112	INTTPBA0IDTY		Duty match detection interrupt
113	INTTPBA0IPAT		Pattern count match detection interrupt
114	INTTABA1IPRD	TABA1	Period match detection interrupt
115	INTTABA1IDTY		Duty match detection interrupt
116	INTTABA1IPAT		Pattern count match detection interrupt
117	INTPSI50RI	PSI5	PSI50 receive interrupt
118	INTPSI51RI		PSI51 receive interrupt
119	INTSENT0RI	SENT0	SETN0 receive interrupt
120	INTSENT1RI	SENT1	SETN1 receive interrupt
121	INTSENT2RI	SENT2	SETN2 receive interrupt
122	INTSENT3RI	SENT3	SETN3 receive interrupt
123	INTSENT4RI	SENT4	SETN4 receive interrupt
124	INTSENT5RI	SENT5	SETN5 receive interrupt
125	DMACTRG[125]	Reserved	—

Table 7.9 List of DMA Trigger Sources (4/4)

Channel	Interrupt Name	Module	DMA Trigger Source
126	DMACTRG[126]	Reserved	—
127	INTDMAFL*[1]	FPSYS	DMA Program for EEPROM

Note 1. For details, see *the RH850/P1x Flash Memory User's Manual: Hardware Interface*.

7.8 DTS Trigger Source

7.8.1 List of DTS Trigger Sources

Table 7.10 shows the DTS trigger source assignment for DTS channel n.

Table 7.10 List of DTS Trigger Sources (1/4)

Channel	Interrupt Name	Module	DTS Trigger Source
0	INTP9	PORT	External interrupt
1	INTTAUJ0I0	TAUJ0	TAUJ0 CH0 interrupt
2	INTTAUJ0I1		TAUJ0 CH1 interrupt
3	INTTAUJ0I2		TAUJ0 CH2 interrupt
4	INTTAUJ0I3		TAUJ0 CH3 interrupt
5	INTTAUJ1I0	TAUJ1	TAUJ1 CH0 interrupt
6	INTTAUJ1I1		TAUJ1 CH1 interrupt
7	INTTAUJ1I2		TAUJ1 CH2 interrupt
8	INTTAUJ1I3		TAUJ1 CH3 interrupt
9	INTTAUJ2I0	TAUJ2	TAUJ2 CH0 interrupt
10	INTTAUJ2I1		TAUJ2 CH1 interrupt
11	INTTAUJ2I2		TAUJ2 CH2 interrupt
12	INTTAUJ2I3		TAUJ2 CH3 interrupt
13	INTTAUD0I0	TAUD0	TAUD0 CH0 interrupt
14	INTTAUD0I1		TAUD0 CH1 interrupt
15	INTTAUD0I2		TAUD0 CH2 interrupt
16	INTTAUD0I3		TAUD0 CH3 interrupt
17	INTTAUD0I4		TAUD0 CH4 interrupt
18	INTTAUD0I5		TAUD0 CH5 interrupt
19	INTTAUD0I6		TAUD0 CH6 interrupt
20	INTTAUD0I7		TAUD0 CH7 interrupt
21	INTTAUD0I8		TAUD0 CH8 interrupt
22	INTTAUD0I9		TAUD0 CH9 interrupt
23	INTTAUD0I10		TAUD0 CH10 interrupt
24	INTTAUD0I11		TAUD0 CH11 interrupt
25	INTTAUD0I12		TAUD0 CH12 interrupt
26	INTTAUD0I13		TAUD0 CH13 interrupt
27	INTTAUD0I14		TAUD0 CH14 interrupt
28	INTTAUD0I15		TAUD0 CH15 interrupt
29	INTTAUD1I0	TAUD1	TAUD1 CH0 interrupt
30	INTTAUD1I1		TAUD1 CH1 interrupt
31	INTTAUD1I2		TAUD1 CH2 interrupt
32	INTTAUD1I3		TAUD1 CH3 interrupt
33	INTTAUD1I4		TAUD1 CH4 interrupt
34	INTTAUD1I5		TAUD1 CH5 interrupt
35	INTTAUD1I6		TAUD1 CH6 interrupt
36	INTTAUD1I7		TAUD1 CH7 interrupt
37	INTTAUD1I8		TAUD1 CH8 interrupt
38	INTTAUD1I9		TAUD1 CH9 interrupt

Table 7.10 List of DTS Trigger Sources (2/4)

Channel	Interrupt Name	Module	DTS Trigger Source
39	INTTAUD1I10	TAUD1	TAUD1 CH10 interrupt
40	INTTAUD1I11		TAUD1 CH11 interrupt
41	INTTAUD1I12		TAUD1 CH12 interrupt
42	INTTAUD1I13		TAUD1 CH13 interrupt
43	INTTAUD1I14		TAUD1 CH14 interrupt
44	INTTAUD1I15		TAUD1 CH15 interrupt
45	INTTAUD2I0	TAUD2	TAUD2 CH0 interrupt
46	INTTAUD2I1		TAUD2 CH1 interrupt
47	INTTAUD2I2		TAUD2 CH2 interrupt
48	INTTAUD2I3		TAUD2 CH3 interrupt
49	INTTAUD2I4		TAUD2 CH4 interrupt
50	INTTAUD2I5		TAUD2 CH5 interrupt
51	INTTAUD2I6		TAUD2 CH6 interrupt
52	INTTAUD2I7		TAUD2 CH7 interrupt
53	INTTAUD2I8		TAUD2 CH8 interrupt
54	INTTAUD2I9		TAUD2 CH9 interrupt
55	INTADCD0I0	ADCD0	ADCD0 SG0 end interrupt
56	INTADCD0I1		ADCD0 SG1 end interrupt
57	INTADCD0I2		ADCD0 SG2 end interrupt
58	INTADCD0I3		ADCD0 SG3 end interrupt
59	INTADCD0I4		ADCD0 SG4 end interrupt
60	INTADCD1I0	ADCD1	ADCD1 SG0 end interrupt
61	INTADCD1I1		ADCD1 SG1 end interrupt
62	INTADCD1I2		ADCD1 SG2 end interrupt
63	INTADCD1I3		ADCD1 SG3 end interrupt
64	INTADCD1I4		ADCD1 SG4 end interrupt
65	INTCSIH0IR0S	CSIH0	CSIH0 receive status /CS0 receive status interrupt
66	INTCSIH0IC0S		CSIH0 communication status /CS0 communication status interrupt
67	INTCSIH0IR1		CSIH0 CS1 receive status interrupt
68	INTCSIH0IC1		CSIH0 CS1 communication status interrupt
69	INTCSIH0IR2		CSIH0 CS2 receive status interrupt
70	INTCSIH0IC2		CSIH0 CS2 communication status interrupt
71	INTCSIH0IJC		CSIH0 JOB completion interrupt
72	INTCSIH1IR0S	CSIH1	CSIH1 receive status /CS0 receive status interrupt
73	INTCSIH1IC0S		CSIH1 communication status /CS0 communication status interrupt
74	INTCSIH1IR1		CSIH1 CS1 receive status interrupt
75	INTCSIH1IC1		CSIH1 CS1 communication status interrupt
76	INTCSIH1IR2		CSIH1 CS2 receive status interrupt
77	INTCSIH1IC2		CSIH1 CS2 communication status interrupt
78	INTCSIH1IJC		CSIH1 JOB completion interrupt
79	INTCSIH2IR0	CSIH2	CSIH2 receive status
80	INTCSIH2IC0		CSIH2 communication status
81	INTCSIH2IJC		CSIH2 JOB completion interrupt

Table 7.10 List of DTS Trigger Sources (3/4)

Channel	Interrupt Name	Module	DTS Trigger Source
82	INTCSIH3IR0	CSIH3	CSIH3 receive status
83	INTCSIH3IC0		CSIH3 communication status
84	INTCSIH3IJC		CSIH3 JOB completion interrupt
85	INTCSIG0IR	CSIG0	CSIG0 receive status interrupt
86	INTCSIG0IC		CSIG0 transmit status interrupt
87	INTSCI30RXI	SCI30	SCI30 receive data full
88	INTSCI30TXI		SCI30 communication data empty
89	INTSCI31RXI	SCI31	SCI31 receive data full
90	INTSCI31TXI		SCI31 communication data empty
91	INTSCI32RXI	SCI32	SCI32 receive data full
92	INTSCI32TXI		SCI32 communication data empty
93	INTADCD0MPX	ADCD0	ADCD0 MPX interrupt request
94	INTADCD1MPX	ADCD1	ADCD1 MPX interrupt request
95	INTRLIN30UR1	RLIN30	RLIN30 receive interrupt
96	INTRLIN30UR0		RLIN30 transmit interrupt
97	INTRLIN31UR1	RLIN31	RLIN31 receive interrupt
98	INTRLIN31UR0		RLIN31 transmit interrupt
99	INTTSG30I11	TSG30	TSG30 compare match interrupt compare match interrupt 11
100	INTTSG30I12		TSG30 compare match interrupt 12
101	INTTSG30IPEK		TSG30 peak interrupt
102	INTTSG30IVLY		TSG30 valley interrupt
103	INTTSG31I11	TSG31	TSG31 compare match interrupt 11
104	INTTSG31I12		TSG31 compare match interrupt 12
105	INTTSG31IPEK		TSG31 peak interrupt
106	INTTSG31IVLY		TSG31 valley interrupt
107	INTENCA0I0	ENCA0	ENCA0 match/capture interrupt0
108	INTENCA0I1		ENCA0 match/capture interrupt1
109	INTENCA1I0	ENCA1	ENCA1 match/capture interrupt0
110	INTENCA1I1		ENCA1match/capture interrupt1
111	INTTPBA0IPRD	TPBA0	Period match detection interrupt
112	INTTPBA0IDTY		Duty match detection interrupt
113	INTTPBA0IPAT		Pattern count match detection interrupt
114	INTTABA1IPRD	TABA1	Period match detection interrupt
115	INTTABA1IDTY		Duty match detection interrupt
116	INTTABA1IPAT		Pattern count match detection interrupt
117	INTPSI50RI	PSI5	PSI50 receive interrupt
118	INTPSI51RI		PSI51 receive interrupt
119	INTSENT0RI	SENT0	SETN0 receive interrupt
120	INTSENT1RI	SENT1	SETN1 receive interrupt
121	INTSENT2RI	SENT2	SETN2 receive interrupt
122	INTSENT3RI	SENT3	SETN3 receive interrupt
123	INTSENT4RI	SENT4	SETN4 receive interrupt
124	INTSENT5RI	SENT5	SETN5 receive interrupt
125	DMACTRG[125]	Reserved	—

Table 7.10 List of DTS Trigger Sources (4/4)

Channel	Interrupt Name	Module	DTS Trigger Source
126	DMACTRG[126]	Reserved	—
127	DMACTRG[127]	Reserved	—

7.9 Global Register

7.9.1 List of Global Register Addresses

Address = Base address "FFFF 8000_H" + Offset address

Table 7.11 List of Global Register Addresses (1/2)

Offset Address	Register Symbol	Meaning	Access	
			Special Master	General Master
0000_H	DMACTL	DMA control register	Allowed	Not allowed
0010_H	DTSCTL1	DTS control register 1	Allowed	Not allowed
0014_H	DTSCTL2	DTS control register 2	Allowed	Not allowed
0018_H	DTSSTS	DTS status register	Allowed	Allowed
0020_H	DMACER	DMAC error register	Allowed	Allowed
0024_H	DTSER1	DTS error register 1	Allowed	Allowed
0028_H	DTSER2	DTS error register 2	Allowed	Allowed
$002C_H$	DTSERC	DTS error clear register	Allowed	Not allowed
0030_H	DM0CMV	DMAC0 register access protection violation register	Allowed	Not allowed
0034_H	DM1CMV	DMAC1 register access protection violation	Allowed	Not allowed
0038_H	DTSCMV	DTS register access protection violation register	Allowed	Not allowed
$003C_H$	CMVC	Register access protection violation clear register	Allowed	Not allowed
0060_H	DTSPR0	DTS channel priority setting 0	Allowed	Not allowed
0064_H	DTSPR1	DTS channel priority setting 1	Allowed	Not allowed
0068_H	DTSPR2	DTS channel priority setting 2	Allowed	Not allowed
$006C_H$	DTSPR3	DTS channel priority setting 3	Allowed	Not allowed
0070_H	DTSPR4	DTS channel priority setting 4	Allowed	Not allowed
0074_H	DTSPR5	DTS channel priority setting 5	Allowed	Not allowed
0078_H	DTSPR6	DTS channel priority setting 6	Allowed	Not allowed
$007C_H$	DTSPR7	DTS channel priority setting 7	Allowed	Not allowed
0080_H	DTRECCTL	DTSRAM ECC control register	Allowed	Not allowed
0084_H	DTRERINT	DTSRAM Error notification control register	Allowed	Not allowed
0094_H	DTRTSCTL	DTSRAM test control register	Allowed	Not allowed
0098_H	DTRTWDAT	DTSRAM test write data register	Allowed	Not allowed
$009C_H$	DTRTRDAT	DTSRAM test read data register	Allowed	Not allowed
0100_H	DM00CM	DMAC0 channel 0 channel master setting	Allowed	Not allowed
0104_H	DM01CM	DMAC0 channel 1 channel master setting	Allowed	Not allowed
0108_H	DM02CM	DMAC0 channel 2 channel master setting	Allowed	Not allowed
$010C_H$	DM03CM	DMAC0 channel 3 channel master setting	Allowed	Not allowed
0110_H	DM04CM	DMAC0 channel 4 channel master setting	Allowed	Not allowed
0114_H	DM05CM	DMAC0 channel 5 channel master setting	Allowed	Not allowed
0118_H	DM06CM	DMAC0 channel 6 channel master setting	Allowed	Not allowed
$011C_H$	DM07CM	DMAC0 channel 7 channel master setting	Allowed	Not allowed
0120_H	DM10CM	DMAC1 channel 0 channel master setting	Allowed	Not allowed
0124_H	DM11CM	DMAC1 channel 1 channel master setting	Allowed	Not allowed
0128_H	DM12CM	DMAC1 channel 2 channel master setting	Allowed	Not allowed
$012C_H$	DM13CM	DMAC1 channel 3 channel master setting	Allowed	Not allowed
0130_H	DM14CM	DMAC1 channel 4 channel master setting	Allowed	Not allowed
0134_H	DM15CM	DMAC1 channel 5 channel master setting	Allowed	Not allowed

Table 7.11 List of Global Register Addresses (2/2)

Offset Address	Register Symbol	Meaning	Access	
			Special Master	General Master
0138_H	DM16CM	DMAC1 channel 6 channel master setting	Allowed	Not allowed
$013C_H$	DM17CM	DMAC1 channel 7 channel master setting	Allowed	Not allowed
0200_H + 4 × [DTS channel number] *1 (0200_H - $03FC_H$)	DTSnnnCM*1	DTS channel nnn channel master setting*1	Allowed	Not allowed

Note 1. [DTS channel number] and “nnn” in the register symbols and meanings are numbers in the range from 000 to 127.

CAUTION

- **It is forbidden to write to the following registers when operation of DMA is enabled (DTE bit = 1 for each DMA channel). If you do, the correct operation is not guaranteed.**
  - **DMnnCM**
- **It is forbidden to write to the following registers when operation of DTS is enabled (DTSACT bit = 1). If you do, the correct operation is not guaranteed.**
  - **DTSPRn**
  - **DTRECCTL**
  - **DTRERINT**
  - **DTRTSCTL**
  - **DTRTWDAT**
  - **DTSnnnCM**

7.9.2 Details of Global Registers

7.9.2.1 DMACTL — DMA Control Register

Access: This register can be read/written in 32-bit units.

Address: FFFF 8000_H

Value after reset: 0000 0000_H

Bit	31	30	29	28	27	26	25	24	23	22	21	20	19	18	17	16
	—	—	—	—	—	—	—	—	—	—	—	—	—	—	—	—
Value after reset	0	0	0	0	0	0	0	0	0	0	0	0	0	0	0	0
R/W	R	R	R	R	R	R	R	R	R	R	R	R	R	R	R	R

Bit	15	14	13	12	11	10	9	8	7	6	5	4	3	2	1	0
	—	—	—	—	—	—	—	—	—	—	—	—	—	—	—	DMA SPD
Value after reset	0	0	0	0	0	0	0	0	0	0	0	0	0	0	0	0
R/W	R	R	R	R	R	R	R	R	R	R	R	R	R	R	R	R/W

Table 7.12 DMACTL Register Contents

Bit Position	Bit Name	Function
31 to 1	Reserved	When read, the value after reset is read. When writing, write the value after reset.
0	DMASPD	DMA suspension This bit shows whether DMA transfer for all channels is suspended. If a user writes 1 to this bit, DMA transfer for all channels can be suspended. If a user writes 0 to this bit, suspension of DMA transfer for all channels can be cleared. The suspension controlled by this bit is independent from the suspension controlled by the transfer enable bit (DTE) of each DMAC channel and the suspension setting bit (DTSUST) for a DTS. That means, if this bit is 1, all DMA transfers are suspended regardless of the values of the DTE bit of each channel and the DTSUST bit of the DTS. Writing to this bit does not affect the DTE bit of each channel and the DTSUST bit of the DTS. 0: DMA suspension cleared 1: DMA suspension request/DMA suspension ongoing

7.9.2.2 DTSCTL1 — DTS Control Register 1

Access: This register can be read/written in 32-bit units.

Address: FFFF 8010_H

Value after reset: 0000 0000_H

Bit	31	30	29	28	27	26	25	24	23	22	21	20	19	18	17	16
	—	—	—	—	—	—	—	—	—	—	—	—	—	—	—	—
Value after reset	0	0	0	0	0	0	0	0	0	0	0	0	0	0	0	0
R/W	R	R	R	R	R	R	R	R	R	R	R	R	R	R	R	R

Bit	15	14	13	12	11	10	9	8	7	6	5	4	3	2	1	0
	—	—	—	—	—	—	—	—	—	—	—	—	—	—	—	DTS UST
Value after reset	0	0	0	0	0	0	0	0	0	0	0	0	0	0	0	0
R/W	R	R	R	R	R	R	R	R	R	R	R	R	R	R	R	R/W

Table 7.13 DTSCTL1 Register Contents

Bit Position	Bit Name	Function
31 to 1	Reserved	When read, the value after reset is read. When writing, write the value after reset.
0	DTSUST	DTS suspension This bit shows whether DMA transfer of a DTS is suspended. If a user writes 1 to this bit, DMA transfer of a DTS can be suspended. 0: DTS suspension cleared 1: DTS suspension request/DTS suspension ongoing

7.9.2.3 DTSCTL2 — DTS Control Register 2

Access: This register can be read/written in 32-bit units.

Address: FFFF 8014_H

Value after reset: $0000\ 0000_H$

Bit	31	30	29	28	27	26	25	24	23	22	21	20	19	18	17	16
	—	—	—	—	—	—	—	—	—	—	—	—	—	—	—	—
Value after reset	0	0	0	0	0	0	0	0	0	0	0	0	0	0	0	0
R/W	R	R	R	R	R	R	R	R	R	R	R	R	R	R	R	R

Bit	15	14	13	12	11	10	9	8	7	6	5	4	3	2	1	0
	—	—	—	—	—	—	—	—	—	—	—	—	—	—	—	DTSTIT
Value after reset	0	0	0	0	0	0	0	0	0	0	0	0	0	0	0	0
R/W	R	R	R	R	R	R	R	R	R	R	R	R	R	R	R	R/W

Table 7.14 DTSCTL2 Register Contents

Bit Position	Bit Name	Function
31 to 1	Reserved	When read, the value after reset is read. When writing, write the value after reset.
0	DTSTIT	DTS transfer abort request While the DTS is suspended, a user can write 1 to this bit to abort the suspended DMA transfer. When the suspended DMA transfer of a DTS is aborted, the DTSSTS.DTSACT bit is cleared to 0. The read value of this bit is always 0.

7.9.2.4 DTSSTS — DTS Status Register

Access: This register can be read in 32-bit units.

Address: FFFF 8018_H

Value after reset: $0000\ 0000_H$

Bit	31	30	29	28	27	26	25	24	23	22	21	20	19	18	17	16
	—	—	—	—	—	—	—	—	—	—	—	—	—	—	—	—
Value after reset	0	0	0	0	0	0	0	0	0	0	0	0	0	0	0	0
R/W	R	R	R	R	R	R	R	R	R	R	R	R	R	R	R	R

Bit	15	14	13	12	11	10	9	8	7	6	5	4	3	2	1	0
	—	—	—	—	—	—	—	DTS CYC	DTSA CH6	DTSA CH5	DTSA CH4	DTSA CH3	DTSA CH2	DTSA CH1	DTSA CH0	DTSA CT
Value after reset	0	0	0	0	0	0	0	0	0	0	0	0	0	0	0	0
R/W	R	R	R	R	R	R	R	R	R	R	R	R	R	R	R	R

Table 7.15 DTSSTS Register Contents

Bit Position	Bit Name	Function
31 to 9	Reserved	When read, the value after reset is read.
8	DTSCYC	DMA cycle execution state This bit shows whether a DMA cycle is ongoing in the DTS. 0: DMA cycle is not ongoing. 1: DMA cycle is ongoing.
7 to 1	DTSACH[6:0]	DTS transfer channel If there is a channel in the DTS executing DMA transfer, the channel number is shown. If there is no channel in the DTS executing DMA transfer, the channel number of the last DMA transfer is shown.
0	DTSACT	DTS transfer status This bit shows whether there is a channel in the DTS executing DMA transfer. 0: There is a channel in the DTS executing DMA transfer. 1: There is no channel in the DTS executing DMA transfer. If the DTS is put into the suspended state while there is a channel executing DMA transfer, this bit remains 1. If a DTS transfer abort request is made using the DTSCTL2.DTSTIT bit, the suspended DTS transfer is aborted, and this bit is cleared to 0. When DMA transfer error occurs and the DMA transfer is aborted, this bit is cleared.

7.9.2.5 DMACER — DMAC Error Register

Access: This register can be read in 32-bit units.

Address: FFFF 8020_H

Value after reset: 0000 0000_H

Bit	31	30	29	28	27	26	25	24	23	22	21	20	19	18	17	16
	—	—	—	—	—	—	—	—	—	—	—	—	—	—	—	—
Value after reset	0	0	0	0	0	0	0	0	0	0	0	0	0	0	0	0
R/W	R	R	R	R	R	R	R	R	R	R	R	R	R	R	R	R

Bit	15	14	13	12	11	10	9	8	7	6	5	4	3	2	1	0
	DM1 ER7	DM1 ER6	DM1 ER5	DE1 ER4	DE1 ER3	DE1 ER2	DE1 ER1	DE1 ER0	DM0 ER7	DM0 ER6	EM0 ER5	EM0 ER4	EM0 ER3	EM0 ER2	EM0 ER1	DM0 ER0
Value after reset	0	0	0	0	0	0	0	0	0	0	0	0	0	0	0	0
R/W	R	R	R	R	R	R	R	R	R	R	R	R	R	R	R	R

Table 7.16 DMACER Register Contents

Bit Position	Bit Name	Function
31 to 16	Reserved	When read, the value after reset is read.
15 to 8	DM1ER[7:0]	DMAC1 DMA transfer error status These bits show the DMA transfer error status of channels 0 through 7 of the DMAC1. Each bit is mapped from the DCSTn.ER bit of each channel of the DMAC1 and is read-only. 0: DMA transfer error is not generated 1: DMA transfer error is generated
7 to 0	DM0ER[7:0]	DMAC0 DMA transfer error status These bits show the DMA transfer error status of channels 0 through 7 of the DMAC0. Each bit is mapped from the DCSTn.ER bit of each channel of the DMAC0 and is read-only. 0: DMA transfer error is not generated 1: DMA transfer error is generated

7.9.2.6 DTSER1 — DTS Error Register 1

Access: This register can be read in 32-bit units.

Address: FFFF 8024_H

Value after reset: 0000 0000_H

Bit	31	30	29	28	27	26	25	24	23	22	21	20	19	18	17	16
	—	—	—	—	—	—	—	—	—	—	—	—	—	—	—	—
Value after reset	0	0	0	0	0	0	0	0	0	0	0	0	0	0	0	0
R/W	R	R	R	R	R	R	R	R	R	R	R	R	R	R	R	R

Bit	15	14	13	12	11	10	9	8	7	6	5	4	3	2	1	0
	—	DTSER CH6	DTSER CH5	DTSER CH4	DTSER CH3	DTSER CH2	DTSER CH1	DTSER CH0	—	—	—	—	—	—	DTSER WR	DTSER
Value after reset	0	0	0	0	0	0	0	0	0	0	0	0	0	0	0	0
R/W	R	R	R	R	R	R	R	R	R	R	R	R	R	R	R	R

Table 7.17 DTSER1 Register Contents

Bit Position	Bit Name	Function
31 to 15	Reserved	When read, the value after reset is read.
14 to 8	DTSERCH[6:0]	DTS error channel These bits show the DTS channel number of the first DMA transfer error after the DTSER bit is cleared to 0. These bits are read-only and cannot be cleared.
7 to 2	Reserved	When read, the value after reset is read.
1	DTSERWR	DTS DMA transfer error occurring cycle This bit is updated at the same time as setting of the DTS DMA transfer error flag (DTSER), indicating which cycle of read or write the DMA transfer error occurs in. This bit is not updated when a new DMA transfer error occurs after the DTSER bit has been set. If the DTSER bit is cleared, this bit is also cleared to 0. 0: DMA transfer error occurs in read cycle. 1: DMA transfer error occurs in write cycle.
0	DTSER	DTS DMA transfer error flag This bit shows whether DMA transfer error is generated in the DTS. 0: DMA transfer error is not generated 1: DMA transfer error is generated If DMA transfer error is generated in the DTS while this bit is 0, this bit is set, and DTSERCH6-0 retains the DTS channel number of the DMA transfer error. If DMA transfer error is generated in the DTS while this bit is 1, this bit remains 1, and DTSERCH6-0 does not change. This bit can be cleared by using the DTSERC register.

7.9.2.7 DTSER2 — DTS Error Register 2

Access: This register can be read in 32-bit units.

Address: FFFF 8028_H

Value after reset: 0000 0000_H

Bit	31	30	29	28	27	26	25	24	23	22	21	20	19	18	17	16
	RAMDED	RAMDEDOV	—	—	RAMDEDAD11	RAMDEDAD10	RAMDEDAD9	RAMDEDAD8	RAMDEDAD7	RAMDEDAD6	RAMDEDAD5	RAMDEDAD4	RAMDEDAD3	RAMDEDAD2	RAMDEDAD1	RAMDEDAD0
Value after reset	0	0	0	0	0	0	0	0	0	0	0	0	0	0	0	0
R/W	R	R	R	R	R	R	R	R	R	R	R	R	R	R	R	R

Bit	15	14	13	12	11	10	9	8	7	6	5	4	3	2	1	0
	RAMSEC	RAMSECOV	—	—	RAMSECAD11	RAMSECAD10	RAMSECAD9	RAMSECAD8	RAMSECAD7	RAMSECAD6	RAMSECAD5	RAMSECAD4	RAMSECAD3	RAMSECAD2	RAMSECAD1	RAMSECAD0
Value after reset	0	0	0	0	0	0	0	0	0	0	0	0	0	0	0	0
R/W	R	R	R	R	R	R	R	R	R	R	R	R	R	R	R	R

Table 7.18 DTSER2 Register Contents (1/2)

Bit Position	Bit Name	Function
31	RAMDED	DTSRAM2-bit error flag This bit shows whether the 2-bit error is generated in the read access to the DTSRAM. 0: 2-bit error is not generated in the DTSRAM 1: 2-bit error is generated in the DTSRAM If 2-bit error is generated in DTSRAM read access while this bit is 0, this bit is set, and RAMDEDAD11-0 retains the DTSRAM address of the error. If 2-bit error is generated in DTSRAM read access while this bit is 1, this bit remains 1, and RAMDEDAD11-0 does not change. This bit can be cleared by using the DTSERC register.
30	RAMDEDOV	DTSRAM 2-bit error overflow flag This bit is set when the RAMDED bit is 1 and the 2-bit error occurs in DTSRAM read access whose address is different from that specified by the RAMDEDAD11-0 bit. This bit can be cleared by operation of the DTSERC register.
29, 28	Reserved	When read, the value after reset is read.
27 to 16	RAMDEDAD [11:0]	DTSRAM 2-bit error address These bits show the DTSRAM address of the first DTSRAM 2-bit error after the RAMDED bit is cleared to 0 in DTSRAM read access. These bits are read-only and cannot be cleared.
15	RAMSEC	DTSRAM 1-bit error flag This bit shows whether the 1-bit error is generated in the read access to the DTSRAM. 0: 1-bit error is not generated in the DTSRAM 1: 1-bit error is generated in the DTSRAM If 1-bit error is generated in DTSRAM read access while this bit is 0, this bit is set, and RAMSECAD11-0 retains the DTSRAM address of the error. If 1-bit error is generated in DTSRAM read access while this bit is 1, this bit remains 1, and RAMSECAD11-0 does not change. This bit can be cleared by using the DTSERC register.
14	RAMSECOV	DTSRAM 1-bit error overflow flag This bit is set when the RAMSEC bit is 1 and the 1-bit error occurs in DTSRAM read access whose address is different from that specified by the RAMSECAD11-0 bit. This bit can be cleared by operation of the DTSERC register.
13, 12	Reserved	When read, the value after reset is read.

Table 7.18 DTSER2 Register Contents (2/2)

Bit Position	Bit Name	Function
11 to 0	RAMSECAD [11:0]	DTSRAM 1-bit error address These bits show the DTSRAM address of the first 1-bit error occurred after the RAMSEC bit is cleared to 0 in DTSRAM read access. These bits are read-only and cannot be cleared.

7.9.2.8 DTSERC — DTS Error Clear Register

Access: This register can be read/written in 32-bit units.

Address: FFFF 802C$_H$

Value after reset: 0000 0000$_H$

Bit	31	30	29	28	27	26	25	24	23	22	21	20	19	18	17	16
	RAMDEDC	RAMDEDOVC	—	—	—	—	—	—	—	—	—	—	—	—	—	—
Value after reset	0	0	0	0	0	0	0	0	0	0	0	0	0	0	0	0
R/W	R/W	R/W	R	R	R	R	R	R	R	R	R	R	R	R	R	R

Bit	15	14	13	12	11	10	9	8	7	6	5	4	3	2	1	0
	RAMSECC	RAMSECOVC	—	—	—	—	—	—	—	—	—	—	—	—	—	DTSERC
Value after reset	0	0	0	0	0	0	0	0	0	0	0	0	0	0	0	0
R/W	R/W	R/W	R	R	R	R	R	R	R	R	R	R	R	R	R	R/W

Table 7.19 DTSERC Register Contents

Bit Position	Bit Name	Function
31	RAMDEDC	DTSRAM 2-bit error flag clear If a user writes 1 to this bit, the DTSRAM 2-bit error flag (DTSER2.RAMDED) is cleared. The read value of this bit is always 0.
30	RAMDEDOVC	DTSRAM 2-bit error overflow flag clear When the user writes 1 to this bit, the DTSRAM 2-bit error overflow flag (DTSER2.RAMDEDOV) is cleared. The read value of this bit is always 0.
29 to 16	Reserved	When read, the value after reset is read. When writing, write the value after reset.
15	RAMSECC	DTSRAM 1-bit error flag clear If a user writes 1 to this bit, the DTSRAM 1-bit error flag (DTSER2.RAMSEC) is cleared. The read value of this bit is always 0.
14	RAMSECOVC	DTSRAM 1-bit error overflow flag clear When the user writes 1 to this bit, the DTSRAM 1-bit error overflow flag (DTSER2.RAMSECOV) is cleared. The read value of this bit is always 0.
13 to 1	Reserved	When read, the value after reset is read. When writing, write the value after reset.
0	DTSERC	DTS error flag clear If a user writes 1 to this bit, the DTS DMA error flag (DTSER1.DTSER) is cleared. The read value of this bit is always 0.

7.9.2.9 DM0CMV — DMAC0 Register Access Protection Violation Register

Access: This register can be read in 32-bit units.

Address: FFFF 8030_H

Value after reset: 0000 0000_H

Bit	31	30	29	28	27	26	25	24	23	22	21	20	19	18	17	16
	—	—	—	—	—	—	—	—	—	MINF[6:1]						—
Value after reset	0	0	0	0	0	0	0	0	0	0	0	0	0	0	0	0
R/W	R	R	R	R	R	R	R	R	R	R	R	R	R	R	R	R

Bit	15	14	13	12	11	10	9	8	7	6	5	4	3	2	1	0
	—	—	—	—	—	—	—	—	—	VCH2	VCH1	VCH0	—	—	—	VF
Value after reset	0	0	0	0	0	0	0	0	0	0	0	0	0	0	0	0
R/W	R	R	R	R	R	R	R	R	R	R	R	R	R	R	R	R

Table 7.20 DM0CMV Register Contents

Bit Position	Bit Name	Function
31 to 23	Reserved	When read, the value after reset is read.
22 to 17	MINF[6:1]	Illegal access master information These bits show the accessing master information of the first illegal access after the VF bit is cleared to 0. If illegal access occurs while the VF bit is 1, these bits do not change. These bits are read-only and cannot be cleared. MINF6-4 retains the PEID of the accessing master, MINF3-2 retains the SPID of the accessing master, and MINF1 retains the UM of the accessing master.
16 to 7	Reserved	When read, the value after reset is read.
6 to 4	VCH[2:0]	Illegal access channel These bits show the channel number (0-7) of the first illegal access after the VF bit is cleared to 0. If illegal access occurs while the VF bit is 1, these bits do not change. These bits are read-only and cannot be cleared.
3 to 1	Reserved	When read, the value after reset is read.
0	VF	Illegal access flag This bit shows whether illegal access occurs in the DMAC0. 0: No illegal access has occurred in the DMAC0 1: Illegal access has occurred in the DMAC0 If illegal access occurs in the DMAC0 while this bit is 0, this bit is set, and MINF6 to 1 and VCH2 to 0 store their respective information. If illegal access occurs in the DMAC0 while this bit is 1, this bit remains 1, and MINF6 to 1 and VCH2 to 0 do not change. This bit can be cleared by using the CMVC register.

7.9.2.10 DM1CMV — DMAC1 Register Access Protection Violation Register

Access: This register can be read in 32-bit units.

Address: FFFF 8034_H

Value after reset: $0000\ 0000_H$

Bit	31	30	29	28	27	26	25	24	23	22	21	20	19	18	17	16
	—	—	—	—	—	—	—	—	—	MINF[6:1]						—
Value after reset	0	0	0	0	0	0	0	0	0	0	0	0	0	0	0	0
R/W	R	R	R	R	R	R	R	R	R	R	R	R	R	R	R	R

Bit	15	14	13	12	11	10	9	8	7	6	5	4	3	2	1	0
	—	—	—	—	—	—	—	—	—	VCH2	VCH1	VCH0	—	—	—	VF
Value after reset	0	0	0	0	0	0	0	0	0	0	0	0	0	0	0	0
R/W	R	R	R	R	R	R	R	R	R	R	R	R	R	R	R	R

Table 7.21 DM1CMV Register Contents

Bit Position	Bit Name	Function
31 to 23	Reserved	When read, the value after reset is read.
22 to 17	MINF[6:1]	Illegal access master information These bits show the accessing master information of the first illegal access after the VF bit is cleared to 0. If illegal access occurs while the VF bit is 1, these bits do not change. These bits are read-only and cannot be cleared. MINF6-4 retains the PEID of the accessing master, MINF3-2 retains the SPID of the accessing master, and MINF1 retains the UM of the accessing master.
16 to 7	Reserved	When read, the value after reset is read.
6 to 4	VCH[2:0]	Illegal access channel These bits show the channel number (0-7) of the first illegal access after the VF bit is cleared to 0. If illegal access occurs while the VF bit is 1, these bits do not change. These bits are read-only and cannot be cleared.
3 to 1	Reserved	When read, the value after reset is read.
0	VF	Illegal access flag This bit shows whether illegal access occurs in the DMAC1. 0: No illegal access has occurred in the DMAC1 1: Illegal access has occurred in the DMAC1 If illegal access occurs in the DMAC1 while this bit is 0, this bit is set, and MINF 6 to 1 and VCH2 to 0 store their respective information. If illegal access occurs in the DMAC1 while this bit is 1, this bit remains 1, and MINF6 to 1 and VCH2 to 0 do not change. This bit can be cleared by using the CMVC register.

7.9.2.11 DTSCMV — DTS Register Access Protection Violation Register

Access: This register can be read in 32-bit units.

Address: FFFF 8038_H

Value after reset: 0000 0000_H

Bit	31	30	29	28	27	26	25	24	23	22	21	20	19	18	17	16
	—	—	—	—	—	—	—	—	—	MINF[6:1]						—
Value after reset	0	0	0	0	0	0	0	0	0	0	0	0	0	0	0	0
R/W	R	R	R	R	R	R	R	R	R	R	R	R	R	R	R	R

Bit	15	14	13	12	11	10	9	8	7	6	5	4	3	2	1	0
	—	—	—	—	—	VCH6	VCH5	VCH4	VCH3	VCH2	VCH1	VCH0	—	—	—	VF
Value after reset	0	0	0	0	0	0	0	0	0	0	0	0	0	0	0	0
R/W	R	R	R	R	R	R	R	R	R	R	R	R	R	R	R	R

Table 7.22 DTSCMV Register Contents

Bit Position	Bit Name	Function
31 to 23	Reserved	When read, the value after reset is read.
22 to 17	MINF[6:1]	Illegal access master information These bits show the accessing master information of the first illegal access after the VF bit is cleared to 0. If illegal access occurs while the VF bit is 1, these bits do not change. These bits are read-only and cannot be cleared. MINF6-4 retains the PEID of the accessing master, MINF3-2 retains the SPID of the accessing master, and MINF1 retains the UM of the accessing master.
16 to 11	Reserved	When read, the value after reset is read.
10 to 4	VCH[6:0]	Illegal access channel These bits show the channel number (0-127) of the first illegal access after the VF bit is cleared to 0. If illegal access occurs while the VF bit is 1, these bits do not change. These bits are read-only and cannot be cleared.
3 to 1	Reserved	When read, the value after reset is read.
0	VF	Illegal access flag This bit shows whether illegal access occurs in the DTS. 0: No illegal access has occurred in the DTS 1: Illegal access has occurred in the DTS If illegal access occurs in the DTS while this bit is 0, this bit is set, and MINF 6 to 1 and VCH6 to 0 store their respective information. If illegal access occurs in the DTS while this bit is 1, this bit remains 1, and MINF6 to 1 and VCH6 to 0 do not change. This bit can be cleared by using the CMVC register.

7.9.2.12 CMVC — Register Access Protection Violation Clear Register

Access: This register can be read/written in 32-bit units.

Address: FFFF 803C$_H$

Value after reset: 0000 0000$_H$

Bit	31	30	29	28	27	26	25	24	23	22	21	20	19	18	17	16
	—	—	—	—	—	—	—	—	—	—	—	—	—	—	—	—
Value after reset	0	0	0	0	0	0	0	0	0	0	0	0	0	0	0	0
R/W	R	R	R	R	R	R	R	R	R	R	R	R	R	R	R	R

Bit	15	14	13	12	11	10	9	8	7	6	5	4	3	2	1	0
	—	—	—	—	—	—	—	—	—	—	—	—	—	DTSVC	DM1VC	DM0VC
Value after reset	0	0	0	0	0	0	0	0	0	0	0	0	0	0	0	0
R/W	R	R	R	R	R	R	R	R	R	R	R	R	R	R/W	R/W	R/W

Table 7.23 CMVC Register Contents

Bit Position	Bit Name	Function
31 to 3	Reserved	When read, the value after reset is read. When writing, write the value after reset.
2	DTSVC	DTS illegal access flag clear The DTS illegal access flag (DTSCMV.VF) can be cleared by writing 1 to this bit. The read value of this bit is always 0.
1	DM1VC	DMAC1 illegal access flag clear The DMAC1 illegal access flag (DM1CMV.VF) can be cleared by writing 1 to this bit. The read value of this bit is always 0.
0	DM0VC	DMAC0 illegal access flag clear The DMAC0 illegal access flag (DM0CMV.VF) can be cleared by writing 1 to this bit. The read value of this bit is always 0.

7.9.2.13 DTSPRn — DTS Channel Priority Setting (n = 0 to 7)

- DTSPR0

Access: This register can be read/written in 32-bit units.

Address: FFFF 8060_H

Value after reset: 0000 0000_H

Bit	31	30	29	28	27	26	25	24	23	22	21	20	19	18	17	16
	DTS15 PR1	DTS15 PR0	DTS14 PR1	DTS14 PR0	DTS13 PR1	DTS13 PR0	DTS12 PR1	DTS12 PR0	DTS11 PR1	DTS11 PR0	DTS10 PR1	DTS10 PR0	DTS9 PR1	DTS9 PR0	DTS8 PR1	DTS8 PR0
Value after reset	0	0	0	0	0	0	0	0	0	0	0	0	0	0	0	0
R/W	R/W	R/W	R/W	R/W	R/W	R/W	R/W	R/W	R/W	R/W	R/W	R/W	R/W	R/W	R/W	R/W

Bit	15	14	13	12	11	10	9	8	7	6	5	4	3	2	1	0
	DTS7 PR1	DTS7 PR0	DTS6 PR1	DTS6 PR0	DTS5 PR1	DTS5 PR0	DTS4 PR1	DTS4 PR0	DTS3 PR1	DTS3 PR0	DTS2 PR1	DTS2 PR0	DTS1 PR1	DTS1 PR0	DTS0 PR1	DTS0 PR0
Value after reset	0	0	0	0	0	0	0	0	0	0	0	0	0	0	0	0
R/W	R/W	R/W	R/W	R/W	R/W	R/W	R/W	R/W	R/W	R/W	R/W	R/W	R/W	R/W	R/W	R/W

Table 7.24 DTSPR0 Register Contents

Bit Position	Bit Name	Function
31 to 0	DTS[15:0] PR[1:0]	DTS channel [15:0] priority setting These bits configure the priority level of each DTS channel used for DTS channel arbitration. 00 is the highest priority, and 11 is the lowest.

- DTSPR1

Access: This register can be read/written in 32-bit units.

Address: FFFF 8064_H

Value after reset: 0000 0000_H

Bit	31	30	29	28	27	26	25	24	23	22	21	20	19	18	17	16
	DTS31 PR1	DTS31 PR0	DTS30 PR1	DTS30 PR0	DTS29 PR1	DTS29 PR0	DTS28 PR1	DTS28 PR0	DTS27 PR1	DTS27 PR0	DTS26 PR1	DTS26 PR0	DTS25 PR1	DTS25 PR0	DTS24 PR1	DTS24 PR0
Value after reset	0	0	0	0	0	0	0	0	0	0	0	0	0	0	0	0
R/W	R/W	R/W	R/W	R/W	R/W	R/W	R/W	R/W	R/W	R/W	R/W	R/W	R/W	R/W	R/W	R/W

Bit	15	14	13	12	11	10	9	8	7	6	5	4	3	2	1	0
	DTS23 PR1	DTS23 PR0	DTS22 PR1	DTS22 PR0	DTS21 PR1	DTS21 PR0	DTS20 PR1	DTS20 PR0	DTS19 PR1	DTS19 PR0	DTS18 PR1	DTS18 PR0	DTS17 PR1	DTS17 PR0	DTS16 PR1	DTS16 PR0
Value after reset	0	0	0	0	0	0	0	0	0	0	0	0	0	0	0	0
R/W	R/W	R/W	R/W	R/W	R/W	R/W	R/W	R/W	R/W	R/W	R/W	R/W	R/W	R/W	R/W	R/W

Table 7.25 DTSPR1 Register Contents

Bit Position	Bit Name	Function
31 to 0	DTS[31:16] PR[1:0]	DTS channel [31:16] priority setting These bits configure the priority level of each DTS channel used for DTS channel arbitration. 00 is the highest priority, and 11 is the lowest.

- DTSPR2

Access: This register can be read/written in 32-bit units.

Address: FFFF 8068_H

Value after reset: 0000 0000_H

Bit	31	30	29	28	27	26	25	24	23	22	21	20	19	18	17	16
	DTS47 PR1	DTS47 PR0	DTS46 PR1	DTS46 PR0	DTS45 PR1	DTS45 PR0	DTS44 PR1	DTS44 PR0	DTS43 PR1	DTS43 PR0	DTS42 PR1	DTS42 PR0	DTS41 PR1	DTS41 PR0	DTS40 PR1	DTS40 PR0
Value after reset	0	0	0	0	0	0	0	0	0	0	0	0	0	0	0	0
R/W	R/W	R/W	R/W	R/W	R/W	R/W	R/W	R/W	R/W	R/W	R/W	R/W	R/W	R/W	R/W	R/W

Bit	15	14	13	12	11	10	9	8	7	6	5	4	3	2	1	0
	DTS39 PR1	DTS39 PR0	DTS38 PR1	DTS38 PR0	DTS37 PR1	DTS37 PR0	DTS36 PR1	DTS36 PR0	DTS35 PR1	DTS35 PR0	DTS34 PR1	DTS34 PR0	DTS33 PR1	DTS33 PR0	DTS32 PR1	DTS32 PR0
Value after reset	0	0	0	0	0	0	0	0	0	0	0	0	0	0	0	0
R/W	R/W	R/W	R/W	R/W	R/W	R/W	R/W	R/W	R/W	R/W	R/W	R/W	R/W	R/W	R/W	R/W

Table 7.26 DTSPR2 Register Contents

Bit Position	Bit Name	Function
31 to 0	DTS[47:32] PR[1:0]	DTS channel [47:32] priority setting These bits configure the priority level of each DTS channel used for DTS channel arbitration. 00 is the highest priority, and 11 is the lowest.

- DTSPR3

Access: This register can be read/written in 32-bit units.

Address: FFFF $806C_H$

Value after reset: 0000 0000_H

Bit	31	30	29	28	27	26	25	24	23	22	21	20	19	18	17	16
	DTS63 PR1	DTS63 PR0	DTS62 PR1	DTS62 PR0	DTS61 PR1	DTS61 PR0	DTS60 PR1	DTS60 PR0	DTS59 PR1	DTS59 PR0	DTS58 PR1	DTS58 PR0	DTS57 PR1	DTS57 PR0	DTS56 PR1	DTS56 PR0
Value after reset	0	0	0	0	0	0	0	0	0	0	0	0	0	0	0	0
R/W	R/W	R/W	R/W	R/W	R/W	R/W	R/W	R/W	R/W	R/W	R/W	R/W	R/W	R/W	R/W	R/W

Bit	15	14	13	12	11	10	9	8	7	6	5	4	3	2	1	0
	DTS55 PR1	DTS55 PR0	DTS54 PR1	DTS54 PR0	DTS53 PR1	DTS53 PR0	DTS52 PR1	DTS52 PR0	DTS51 PR1	DTS51 PR0	DTS50 PR1	DTS50 PR0	DTS49 PR1	DTS49 PR0	DTS48 PR1	DTS48 PR0
Value after reset	0	0	0	0	0	0	0	0	0	0	0	0	0	0	0	0
R/W	R/W	R/W	R/W	R/W	R/W	R/W	R/W	R/W	R/W	R/W	R/W	R/W	R/W	R/W	R/W	R/W

Table 7.27 DTSPR3 Register Contents

Bit Position	Bit Name	Function
31 to 0	DTS[63:48] PR[1:0]	DTS channel [63:48] priority setting These bits configure the priority level of each DTS channel used for DTS channel arbitration. 00 is the highest priority, and 11 is the lowest.

- DTSPR4

Access: This register can be read/written in 32-bit units.

Address: FFFF 8070_H

Value after reset: $0000\ 0000_H$

Bit	31	30	29	28	27	26	25	24	23	22	21	20	19	18	17	16
	DTS79 PR1	DTS79 PR0	DTS78 PR1	DTS78 PR0	DTS77 PR1	DTS77 PR0	DTS76 PR1	DTS76 PR0	DTS75 PR1	DTS75 PR0	DTS74 PR1	DTS74 PR0	DTS73 PR1	DTS73 PR0	DTS72 PR1	DTS72 PR0
Value after reset	0	0	0	0	0	0	0	0	0	0	0	0	0	0	0	0
R/W	R/W	R/W	R/W	R/W	R/W	R/W	R/W	R/W	R/W	R/W	R/W	R/W	R/W	R/W	R/W	R/W

Bit	15	14	13	12	11	10	9	8	7	6	5	4	3	2	1	0
	DTS71 PR1	DTS71 PR0	DTS70 PR1	DTS70 PR0	DTS69 PR1	DTS69 PR0	DTS68 PR1	DTS68 PR0	DTS67 PR1	DTS67 PR0	DTS66 PR1	DTS66 PR0	DTS65 PR1	DTS65 PR0	DTS64 PR1	DTS64 PR0
Value after reset	0	0	0	0	0	0	0	0	0	0	0	0	0	0	0	0
R/W	R/W	R/W	R/W	R/W	R/W	R/W	R/W	R/W	R/W	R/W	R/W	R/W	R/W	R/W	R/W	R/W

Table 7.28 DTSPR4 Register Contents

Bit Position	Bit Name	Function
31 to 0	DTS[79:64] PR[1:0]	DTS channel [79:64] priority setting These bits configure the priority level of each DTS channel used for DTS channel arbitration. 00 is the highest priority, and 11 is the lowest.

- DTSPR5

Access: This register can be read/written in 32-bit units.

Address: FFFF 8074_H

Value after reset: $0000\ 0000_H$

Bit	31	30	29	28	27	26	25	24	23	22	21	20	19	18	17	16
	DTS95 PR1	DTS95 PR0	DTS94 PR1	DTS94 PR0	DTS93 PR1	DTS93 PR0	DTS92 PR1	DTS92 PR0	DTS91 PR1	DTS91 PR0	DTS90 PR1	DTS90 PR0	DTS89 PR1	DTS89 PR0	DTS88 PR1	DTS88 PR0
Value after reset	0	0	0	0	0	0	0	0	0	0	0	0	0	0	0	0
R/W	R/W	R/W	R/W	R/W	R/W	R/W	R/W	R/W	R/W	R/W	R/W	R/W	R/W	R/W	R/W	R/W

Bit	15	14	13	12	11	10	9	8	7	6	5	4	3	2	1	0
	DTS87 PR1	DTS87 PR0	DTS86 PR1	DTS86 PR0	DTS85 PR1	DTS85 PR0	DTS84 PR1	DTS84 PR0	DTS83 PR1	DTS83 PR0	DTS82 PR1	DTS82 PR0	DTS81 PR1	DTS81 PR0	DTS80 PR1	DTS80 PR0
Value after reset	0	0	0	0	0	0	0	0	0	0	0	0	0	0	0	0
R/W	R/W	R/W	R/W	R/W	R/W	R/W	R/W	R/W	R/W	R/W	R/W	R/W	R/W	R/W	R/W	R/W

Table 7.29 DTSPR5 Register Contents

Bit Position	Bit Name	Function
31 to 0	DTS[95:80] PR[1:0]	DTS channel [95:80] priority setting These bits configure the priority level of each DTS channel used for DTS channel arbitration. 00 is the highest priority, and 11 is the lowest.

- DTSPR6

Access: This register can be read/written in 32-bit units.

Address: FFFF 8078_H

Value after reset: $0000\ 0000_H$

Bit	31	30	29	28	27	26	25	24	23	22	21	20	19	18	17	16
	DTS111 PR1	DTS111 PR0	DTS110 PR1	DTS110 PR0	DTS109 PR1	DTS109 PR0	DTS108 PR1	DTS108 PR0	DTS107 PR1	DTS107 PR0	DTS106 PR1	DTS106 PR0	DTS105 PR1	DTS105 PR0	DTS104 PR1	DTS104 PR0
Value after reset	0	0	0	0	0	0	0	0	0	0	0	0	0	0	0	0
R/W	R/W	R/W	R/W	R/W	R/W	R/W	R/W	R/W	R/W	R/W	R/W	R/W	R/W	R/W	R/W	R/W

Bit	15	14	13	12	11	10	9	8	7	6	5	4	3	2	1	0
	DTS103 PR1	DTS103 PR0	DTS102 PR1	DTS102 PR0	DTS101 PR1	DTS101 PR0	DTS100 PR1	DTS100 PR0	DTS99 PR1	DTS99 PR0	DTS98 PR1	DTS98 PR0	DTS97 PR1	DTS97 PR0	DTS96 PR1	DTS96 PR0
Value after reset	0	0	0	0	0	0	0	0	0	0	0	0	0	0	0	0
R/W	R/W	R/W	R/W	R/W	R/W	R/W	R/W	R/W	R/W	R/W	R/W	R/W	R/W	R/W	R/W	R/W

Table 7.30 DTSPR6 Register Contents

Bit Position	Bit Name	Function
31 to 0	DTS[111:96] PR[1:0]	DTS channel [111:96] priority setting These bits configure the priority level of each DTS channel used for DTS channel arbitration. 00 is the highest priority, and 11 is the lowest.

- DTSPR7

Access: This register can be read/written in 32-bit units.

Address: FFFF $807C_H$

Value after reset: $0000\ 0000_H$

Bit	31	30	29	28	27	26	25	24	23	22	21	20	19	18	17	16
	DTS127 PR1	DTS127 PR0	DTS126 PR1	DTS126 PR0	DTS125 PR1	DTS125 PR0	DTS124 PR1	DTS124 PR0	DTS123 PR1	DTS123 PR0	DTS122 PR1	DTS122 PR0	DTS121 PR1	DTS121 PR0	DTS120 PR1	DTS120 PR0
Value after reset	0	0	0	0	0	0	0	0	0	0	0	0	0	0	0	0
R/W	R/W	R/W	R/W	R/W	R/W	R/W	R/W	R/W	R/W	R/W	R/W	R/W	R/W	R/W	R/W	R/W

Bit	15	14	13	12	11	10	9	8	7	6	5	4	3	2	1	0
	DTS119 PR1	DTS119 PR0	DTS118 PR1	DTS118 PR0	DTS117 PR1	DTS117 PR0	DTS116 PR1	DTS116 PR0	DTS115 PR1	DTS115 PR0	DTS114 PR1	DTS114 PR0	DTS113 PR1	DTS113 PR0	DTS112 PR1	DTS112 PR0
Value after reset	0	0	0	0	0	0	0	0	0	0	0	0	0	0	0	0
R/W	R/W	R/W	R/W	R/W	R/W	R/W	R/W	R/W	R/W	R/W	R/W	R/W	R/W	R/W	R/W	R/W

Table 7.31 DTSPR7 Register Contents

Bit Position	Bit Name	Function
31 to 0	DTS[127:112] PR[1:0]	DTS channel [127:112] priority setting These bits configure the priority level of each DTS channel used for DTS channel arbitration. 00 is the highest priority, and 11 is the lowest.

7.9.2.14 DTRECCTL — DTSRAM ECC Control Register

Access: This register can be read/written in 32-bit units.

Address: FFFF 8080_H

Value after reset: 0000 0000_H

Bit	31	30	29	28	27	26	25	24	23	22	21	20	19	18	17	16
	PROT1	PROT0	—	—	—	—	—	—	—	—	—	—	—	—	—	—
Value after reset	0	0	0	0	0	0	0	0	0	0	0	0	0	0	0	0
R/W	R/W	R/W	R	R	R	R	R	R	R	R	R	R	R	R	R	R

Bit	15	14	13	12	11	10	9	8	7	6	5	4	3	2	1	0
	—	—	—	—	—	—	—	—	—	—	—	—	—	—	SECDIS	ECCDIS
Value after reset	0	0	0	0	0	0	0	0	0	0	0	0	0	0	0	0
R/W	R	R	R	R	R	R	R	R	R	R	R	R	R	R	R/W	R/W

Table 7.32 DTRECCTL Register Contents

Bit Position	Bit Name	Function
31, 30	PROT[1:0]	These bits enable or disable writing to the ECCDIS and SECDIS bits. The written data is not retained. The read value is always 0. These bits should be written when (PROT1, PROT0) = (0, 1).
29 to 2	Reserved	When read, the value after reset is read. When writing, write the value after reset.
1	SECDIS	DTSRAM 1-bit error correction disable This bit enables or disables 1-bit error correction when the ECCDIS bit is 0. ECC1 bit error detection operation is always executed when ECCDIS bit is 0 regardless of the state of this bit. Set (PROT1, PROT0) = (0, 1) at the same time as writing to this bit. 0: Error correction is enabled when the 1-bit error is detected. 1: Error correction is disabled when the 1-bit error is detected.
0	ECCDIS	DTSRAM ECC disable This bit enables or disables DTSRAM ECC error detection and correction. Set (PROT1, PROT0) = (0, 1) at the same time as writing to this bit. 0: Error detection and correction are enabled. 1: Error detection and correction are disabled. **Note:** The encoding function is effective when error detection and correction are disabled.

7.9.2.15 DTRERINT — DTSRAM Error Notification Control Register

Access: This register can be read/written in 32-bit units.

Address: FFFF 8084_H

Value after reset: 0000 0002_H

Bit	31	30	29	28	27	26	25	24	23	22	21	20	19	18	17	16
	—	—	—	—	—	—	—	—	—	—	—	—	—	—	—	—
Value after reset	0	0	0	0	0	0	0	0	0	0	0	0	0	0	0	0
R/W	R	R	R	R	R	R	R	R	R	R	R	R	R	R	R	R

Bit	15	14	13	12	11	10	9	8	7	6	5	4	3	2	1	0
	—	—	—	—	—	—	—	—	—	—	—	—	—	—	DEDIE	SEDIE
Value after reset	0	0	0	0	0	0	0	0	0	0	0	0	0	0	1	0
R/W	R	R	R	R	R	R	R	R	R	R	R	R	R	R	R/W	R/W

Table 7.33 DTRERINT Register Contents

Bit Position	Bit Name	Function
31 to 2	Reserved	When read, the value after reset is read. When writing, write the value after reset.
1	DEDIE	DTSRAM 2-bit error external notification enable This bit enables or disables notification of 2-bit error detection to the ECM when the ECCDIS bit in DTRECCTL is 0. 0: Notification of 2-bit error to ECM is disabled. 1: Notification of 2-bit error to ECM is enabled.
0	SEDIE	DTSRAM 1-bit error external notification enable This bit enables or disables notification of 1-bit error detection to the ECM when the ECCDIS bit in DTRECCTL is 0. 0: Notification of 1-bit error to ECM is disabled. 1: Notification of 1-bit error to ECM is enabled.

7.9.2.16 DTRTSCTL — DTSRAM Test Control Register

This register is used for ECC test (self-diagnosis). It enables setting of ECC test mode and selection of ECC data to be written to the DTSRAM.

Access: This register can be read/written in 32-bit units.

Address: FFFF 8094_H

Value after reset: $0000\ 0000_H$

Bit	31	30	29	28	27	26	25	24	23	22	21	20	19	18	17	16
	PROT1	PROT0	—	—	—	—	—	—	—	—	—	—	—	—	—	—
Value after reset	0	0	0	0	0	0	0	0	0	0	0	0	0	0	0	0
R/W	R/W	R/W	R	R	R	R	R	R	R	R	R	R	R	R	R	R

Bit	15	14	13	12	11	10	9	8	7	6	5	4	3	2	1	0
	—	—	—	—	—	—	—	—	—	—	—	—	—	—	ECCTST	DATSEL
Value after reset	0	0	0	0	0	0	0	0	0	0	0	0	0	0	0	0
R/W	R	R	R	R	R	R	R	R	R	R	R	R	R	R	R/W	R/W

Table 7.34 DTRTSCTL Register Contents

Bit Position	Bit Name	Function
31, 30	PROT[1:0]	These bits enable or disable writing to the ECCTST and DATSEL bits. The written data is not retained. The read value is always 0. These bits should be written when (PROT1, PROT0) = (0, 1).
29 to 2	Reserved	When read, the value after reset is read. When writing, write the value after reset.
1	ECCTST	DTSRAM ECC Test Mode This bit enables or disables DTSRAM ECC test mode. Set (PROT1, PROT0) = (0, 1) at the same time as writing to this bit. 0: ECC test mode is disabled. 1: ECC test mode is enabled.
0	DATSEL	ECC Test Data Selection This bit is valid when ECCTST is 1 and selects ECC data to be written to the DTSRAM. Set (PROT1, PROT0) = (0, 1) at the same time as writing to this bit. 0: ECC encoded from the written data is used. 1: The value specified by the DTSRAM test data writing register (DTRTWDAT) is used.

7.9.2.17 DTRTWDAT — DTSRAM Test Write Data Register

This register is used for ECC test (self-diagnosis). It specifies ECC data to be written to the DTSRAM after ECC test mode is enabled (ECCTST = 1).

Access: This register can be read/written in 32-bit units.

Address: FFFF 8098_H

Value after reset: 0000 0000_H

Bit	31	30	29	28	27	26	25	24	23	22	21	20	19	18	17	16
	—	—	—	—	—	—	—	—	—	—	—	—	—	—	—	—
Value after reset	0	0	0	0	0	0	0	0	0	0	0	0	0	0	0	0
R/W	R	R	R	R	R	R	R	R	R	R	R	R	R	R	R	R

Bit	15	14	13	12	11	10	9	8	7	6	5	4	3	2	1	0
	—	—	—	—	—	—	—	—	—	TWDAT 6	TWDAT 5	TWDAT 4	TWDAT 3	TWDAT 2	TWDAT 1	TWDAT 0
Value after reset	0	0	0	0	0	0	0	0	0	0	0	0	0	0	0	0
R/W	R	R	R	R	R	R	R	R	R	R/W	R/W	R/W	R/W	R/W	R/W	R/W

Table 7.35 DTRTWDAT Register Contents

Bit Position	Bit Name	Function
31 to 7	Reserved	When read, the value after reset is read. When writing, write the value after reset.
6 to 0	TWDAT[6:0]	ECC Test Write Data These bits specifies ECC data to be written to the DTSRAM when DTRTSCTL.ECCTST = 1 and DTRTSCTL.DATSEL = 1. Writing to this bit is enabled when DTRTSCTL.ECCTST = 1 When DTRTSCTL.ECCTST = 0, this bit cannot be written and its read value is 0.

7.9.2.18 DTRTRDAT — DTSRAM Test Read Data Register

This register is used for ECC test (self-diagnosis). It reads out ECC data of the DTSRAM after ECC test mode is enabled (ECCTST = 1).

Access: This register can be read in 32-bit units.

Address: FFFF 809C$_H$

Value after reset: 0000 0000$_H$

Bit	31	30	29	28	27	26	25	24	23	22	21	20	19	18	17	16
	—	—	—	—	—	—	—	—	—	—	—	—	—	—	—	—
Value after reset	0	0	0	0	0	0	0	0	0	0	0	0	0	0	0	0
R/W	R	R	R	R	R	R	R	R	R	R	R	R	R	R	R	R

Bit	15	14	13	12	11	10	9	8	7	6	5	4	3	2	1	0
	—	—	—	—	—	—	—	—	—	TRDAT6	TRDAT5	TRDAT4	TRDAT3	TRDAT2	TRDAT1	TRDAT0
Value after reset	0	0	0	0	0	0	0	0	0	0	0	0	0	0	0	0
R/W	R	R	R	R	R	R	R	R	R	R	R	R	R	R	R	R

Table 7.36 DTRTRDAT Register Contents

Bit Position	Bit Name	Function
31 to 7	Reserved	When read, the value after reset is read.
6 to 0	TRDAT[6:0]	ECC Test Read Data This bits retains the last ECC data read out from the DTSRAM when DTRTSCTL.ECCTST = 1. When DTRTSCTL.ECCTST = 0, the read value of this bit is 0.

7.9.2.19 DMnnCM — DMAC Channel Master Setting (nn = 00 to 07, 10 to 17)

Access: This register can be read/written in 32-bit units.

Address: $FFFF\ 8100_H + 4 \times$ Ch. No. n (n = 0 to 7)
$FFFF\ 8120_H + 4 \times$ Ch. No. n - 10 (n = 10 to 17)

Value after reset: $0000\ 0010_H$

Bit	31	30	29	28	27	26	25	24	23	22	21	20	19	18	17	16
	—	—	—	—	—	—	—	—	—	—	—	—	—	—	—	—
Value after reset	0	0	0	0	0	0	0	0	0	0	0	0	0	0	0	0
R/W	R	R	R	R	R	R	R	R	R	R	R	R	R	R	R	R

Bit	15	14	13	12	11	10	9	8	7	6	5	4	3	2	1	0
	—	—	—	—	—	—	—	—	—	PEID2	PEID1	PEID0	SPID1	SPID0	UM	—
Value after reset	0	0	0	0	0	0	0	0	0	0	0	1	0	0	0	0
R/W	R	R	R	R	R	R	R	R	R	R/W	R/W	R/W	R/W	R/W	R/W	R

Table 7.37 DMnnCM Register Contents

Bit Position	Bit Name	Function
31 to 10	Reserved	When read, the value after reset is read. When writing, write the value after reset.
9 to 7	Reserved	When writing, always write 0.
6 to 4	PEID[2:0]	Channel master PEID setting Specifies the PEID information of the master assigned to the channel.
3, 2	SPID[1:0]	Channel master SPID setting Specifies the SPID information used by the master assigned to the channel.
1	UM	Channel master UM setting Specifies the UM information of the master assigned to the channel.
0	Reserved	When writing, always write 0.

CAUTION

DM00CM to DM07CM configure the channel master information of the DMAC0 channel 0 to 7 respectively.

DM10CM to DM17CM configure the channel master information of the DMAC1 channel 0 to 7 respectively.

For information about the functions this register offers, see **Section 7.5, Reliability Function**.

7.9.2.20 DTSnnnCM — DTS Channel Master Setting Register (nnn = 000 to 127)

Access: This register can be read/written in 32-bit units.

Address: FFFF $8200_H + 4_H$ × Ch. No. n (n = 0 to 127)

Value after reset: Undefined

Bit	31	30	29	28	27	26	25	24	23	22	21	20	19	18	17	16
	—	—	—	—	—	—	—	—	—	PEID2	PEID1	PEID0	SPID1	SPID0	UM	—
Value after reset	Undefined	Undefined	Undefined	Undefined	Undefined	Undefined	Undefined	Undefined	Undefined	Undefined	Undefined	Undefined	Undefined	Undefined	Undefined	Undefined
R/W	R	R	R	R	R	R	R	R	R	R/W	R/W	R/W	R/W	R/W	R/W	R

Bit	15	14	13	12	11	10	9	8	7	6	5	4	3	2	1	0
	CMC15	CMC14	CMC13	CMC12	CMC11	CMC10	CMC9	CMC8	CMC7	CMC6	CMC5	CMC4	CMC3	CMC2	CMC1	CMC0
Value after reset	Undefined	Undefined	Undefined	Undefined	Undefined	Undefined	Undefined	Undefined	Undefined	Undefined	Undefined	Undefined	Undefined	Undefined	Undefined	Undefined
R/W	R/W	R/W	R/W	R/W	R/W	R/W	R/W	R/W	R/W	R/W	R/W	R/W	R/W	R/W	R/W	R/W

Table 7.38 DTSnnnCM Register Contents

Bit Position	Bit Name	Function
31 to 23	Reserved	When read, an undefined value is read. When writing, always write 0.
22 to 20	PEID[2:0]	Channel master PEID setting Specifies the PEID information of the master assigned to the channel.
19, 18	SPID[1:0]	Channel master SPID setting Specifies the SPID information used by the master assigned to the channel.
17	UM	Channel master UM setting Specifies the UM information of the master assigned to the channel.
16	Reserved	When read, an undefined value is read. When writing, always write 0.
15 to 0	CMC[15:0]	Transfer count compare In terms of contents, this field is the same as the bit [15:0] of the **Section 7.11.3.8, DTTCCnnn — DTS Transfer Count Compare Register**.

CAUTIONS

1. DTS000CM - DTS127CM configure the channel master information of the DTS channel 0 - 127 respectively.
2. Register access to the channels indicated as “reserved” in **Table 7.10, List of DTS Trigger Sources** is prohibited.

For information about the functions this register offers, see **Section 7.5, Reliability Function**.

CAUTION

The lowest 16 bits of this register are shared with the DTS transfer count compare register, one of the DTS channel registers.
If you write to this register, the DTS transfer count compare register is updated as well.

Recommended setup procedure of the DTS channel master setting register

When the special master configures the overall DMA operation, the channel master setting must be configured in the bits 25-16 in this register, and 0 must be specified in the bits 15-0 and the reserved bits 31-26.

When the master assigned to the channel updates the value of the transfer count compare, use the DTS transfer count compare register instead.

You can read and write the reserved bits of this register. Our recommendation is as follows. When you write to those bits, write 0. When you read from those bits, discard the read value by software.

7.10 DMAC Channel Register

7.10.1 DMAC Channel Register Address

Address = Base address "FFFF 8000_H" + Offset address

Table 7.39 DMAC Channel Register Address

Offset Address	Register Symbol	Meaning	Access	
			Special Master	General Master
0400_H + 40_H × [channel number]	DSAn	DMAC source address	Allowed	Allowed
0404_H + 40_H × [channel number]	DDAn	DMAC destination address	Allowed	Allowed
0408_H + 40_H × [channel number]	DTCn	DMAC transfer count	Allowed	Allowed
$040C_H$ + 40_H × [channel number]	DTCTn	DMAC transfer control	Allowed	Allowed
0410_H + 40_H × [channel number]	DRSAn	DMAC reload source address	Allowed	Allowed
0414_H + 40_H × [channel number]	DRDAn	DMAC reload destination address	Allowed	Allowed
0418_H + 40_H × [channel number]	DRTCn	DMAC reload transfer count	Allowed	Allowed
$041C_H$ + 40_H × [channel number]	DTCCn	DMAC transfer count compare	Allowed	Allowed
0420_H + 40_H × [channel number]	DCENn	DMAC channel operation enable setting	Allowed	Allowed
0424_H + 40_H × [channel number]	DCSTn	DMAC transfer status	Allowed	Allowed
0428_H + 40_H × [channel number]	DCSTSn	DMAC transfer status set	Allowed	Allowed
$042C_H$ + 40_H × [channel number]	DCSTCn	DMAC transfer status clear	Allowed	Allowed
0430_H + 40_H × [channel number]	DTFRn	DTFR setting	Allowed	Allowed
0434_H + 40_H × [channel number]	DTFRRQn	DTFR transfer request status	Allowed	Allowed
0438_H + 40_H × [channel number]	DTFRRQCn	DTFR transfer request clear	Allowed	Allowed

Note 1. The [channel number] in the offset addresses and "n" in the register symbols are numbers in the range from 0 to 15, and the correspondence between the channel number n and the channel is as follows.

Channel number n	Channel
0	DMAC0 channel 0
1	DMAC0 channel 1
2	DMAC0 channel 2
3	DMAC0 channel 3
4	DMAC0 channel 4
5	DMAC0 channel 5
6	DMAC0 channel 6
7	DMAC0 channel 7
8	DMAC1 channel 0
9	DMAC1 channel 1
10	DMAC1 channel 2
11	DMAC1 channel 3
12	DMAC1 channel 4
13	DMAC1 channel 5
14	DMAC1 channel 6
15	DMAC1 channel 7

7.10.2 Details of DMAC Channel Registers

The "n" in the register symbols indicates the DMAC channel number (n = 0 to 15).

7.10.2.1 DSAn — DMAC Source Address Register

Access: This register can be read/written in 32-bit units.

Address: FFFF 8400_H + 40_H × Ch. No. n (n = 0 to 15)

Value after reset: 0000 0000_H

Bit	31	30	29	28	27	26	25	24	23	22	21	20	19	18	17	16
	SA31	SA30	SA29	SA28	SA27	SA26	SA25	SA24	SA23	SA22	SA21	SA20	SA19	SA18	SA17	SA16
Value after reset	0	0	0	0	0	0	0	0	0	0	0	0	0	0	0	0
R/W	R/W	R/W	R/W	R/W	R/W	R/W	R/W	R/W	R/W	R/W	R/W	R/W	R/W	R/W	R/W	R/W

Bit	15	14	13	12	11	10	9	8	7	6	5	4	3	2	1	0
	SA15	SA14	SA13	SA12	SA11	SA10	SA9	SA8	SA7	SA6	SA5	SA4	SA3	SA2	SA1	SA0
Value after reset	0	0	0	0	0	0	0	0	0	0	0	0	0	0	0	0
R/W	R/W	R/W	R/W	R/W	R/W	R/W	R/W	R/W	R/W	R/W	R/W	R/W	R/W	R/W	R/W	R/W

Table 7.40 DSAn Register Contents

Bit Position	Bit Name	Function
31 to 0	SA[31:0]	Source address Specifies the DMA transfer source address. Those bits are updated whenever a DMA cycle is executed. If you read from those bits, the transfer source address for the next DMA cycle is read.

CAUTIONS

1. It is forbidden to write to those bits when the channel operation is enabled (DTE bit = 1). If you do, the correct operation is not guaranteed.
2. The address must be set up while the DTE bit is 0.
3. If an error occurs in the source during the read cycle of DMA transfer, the write cycle does not proceed but the source address is updated.
4. DMA transfer for misaligned data is not supported. The possible lowest four bits of the address for each transfer data size is as follows. (× denotes an arbitrary one bit.)
   The correct operation is not guaranteed if you select any other setting.

Data Size	SA3	SA2	SA1	SA0
8 bits	×	×	×	×
16 bits	×	×	×	0
32 bits	×	×	0	0
64 bits	×	0	0	0
128 bits	0	0	0	0

7.10.2.2 DDAn — DMAC Destination Address Register

Access: This register can be read/written in 32-bit units.

Address: FFFF 8404_H + 40_H × Ch. No. n (n = 0 to 15)

Value after reset: 0000 0000_H

Bit	31	30	29	28	27	26	25	24	23	22	21	20	19	18	17	16
	DA31	DA30	DA29	DA28	DA27	DA26	DA25	DA24	DA23	DA22	DA21	DA20	DA19	DA18	DA17	DA16
Value after reset	0	0	0	0	0	0	0	0	0	0	0	0	0	0	0	0
R/W	R/W	R/W	R/W	R/W	R/W	R/W	R/W	R/W	R/W	R/W	R/W	R/W	R/W	R/W	R/W	R/W

Bit	15	14	13	12	11	10	9	8	7	6	5	4	3	2	1	0
	DA15	DA14	DA13	DA12	DA11	DA10	DA9	DA8	DA7	DA6	DA5	DA4	DA3	DA2	DA1	DA0
Value after reset	0	0	0	0	0	0	0	0	0	0	0	0	0	0	0	0
R/W	R/W	R/W	R/W	R/W	R/W	R/W	R/W	R/W	R/W	R/W	R/W	R/W	R/W	R/W	R/W	R/W

Table 7.41 DDAn Register Contents

Bit Position	Bit Name	Function
31 to 0	DA[31:0]	Destination address Specifies the DMA transfer destination address. Those bits are updated whenever a DMA cycle is executed. If you read from those bits, the transfer destination address for the next DMA cycle is read.

CAUTIONS

1. It is forbidden to write to those bits when the channel operation is enabled (DTE bit = 1). If you do, the correct operation is not guaranteed.
2. The address must be set up while the DTE bit is 0.
3. If transfer error is generated in the read cycle of DMA transfer, the write cycle is not executed, but the destination address is updated.
4. DMA transfer for misaligned data is not supported. The possible lowest four bits of the address for each transfer data size is as follows. (× denotes an arbitrary one bit.)
   The correct operation is not guaranteed if you select any other setting.

Data Size	DA3	DA2	DA1	DA0
8 bits	×	×	×	×
16 bits	×	×	×	0
32 bits	×	×	0	0
64 bits	×	0	0	0
128 bits	0	0	0	0

7.10.2.3 DTCn — DMAC Transfer Count Register

Access: This register can be read/written in 32-bit units.

Address: FFFF 8408_H + 40_H × Ch. No. n (n = 0 to 15)

Value after reset: 0000 0000_H

Bit	31	30	29	28	27	26	25	24	23	22	21	20	19	18	17	16
	ARC15	ARC14	ARC13	ARC12	ARC11	ARC10	ARC9	ARC8	ARC7	ARC6	ARC5	ARC4	ARC3	ARC2	ARC1	ARC0
Value after reset	0	0	0	0	0	0	0	0	0	0	0	0	0	0	0	0
R/W	R/W	R/W	R/W	R/W	R/W	R/W	R/W	R/W	R/W	R/W	R/W	R/W	R/W	R/W	R/W	R/W

Bit	15	14	13	12	11	10	9	8	7	6	5	4	3	2	1	0
	TRC15	TRC14	TRC13	TRC12	TRC11	TRC10	TRC9	TRC8	TRC7	TRC6	TRC5	TRC4	TRC3	TRC2	TRC1	TRC0
Value after reset	0	0	0	0	0	0	0	0	0	0	0	0	0	0	0	0
R/W	R/W	R/W	R/W	R/W	R/W	R/W	R/W	R/W	R/W	R/W	R/W	R/W	R/W	R/W	R/W	R/W

Table 7.42 DTCn Register Contents

Bit Position	Bit Name	Function
31 to 16	ARC[15:0]	Address reload count Specifies the number of transfers until the address reload when the reload function 2 is used, and also specifies the number of transfers when the block transfer 2 is used. If you read from those bits during DMA transfer, the address reload count for the next DMA cycle is read. When the reload function 2 or block transfer 2 is used, ARC[15:0] is decremented by one for every DMA cycle. When the reload function 2 or block transfer 2 is not used, ARC[15:0] is not updated. If the value is 0000_H, it means that the number of transfers until the address reload when the reload function 2 is used and the number of transfers when the block transfer 2 is used are 65536.
15 to 0	TRC[15:0]	Transfer count Configures the number of transfers. TRC[15:0] is decremented by one whenever a DMA cycle is executed. If you read from those bits, the remaining number of transfers for the next DMA cycle is read. If the reload function is not used, after the last transfer is complete, the value at the completion (0000_H) is retained. **TRC[15:0] — Operation** 0000_H — The number of transfers is 65536, or the transfer is complete. 0001_H — The number of transfers or remaining transfers is 1. : — : $FFFF_H$ — The number of transfers or remaining transfers is 65535.

CAUTIONS

1. It is forbidden to write to those bits when the channel operation is enabled (DTE bit = 1). If you do, the correct operation is not guaranteed.
2. If transfer error is generated in the read cycle of DMA transfer, the write cycle is not executed, but the transfer count and the address reload count are updated.

7.10.2.4 DTCTn — DMAC Transfer Control Register

Access: This register can be read/written in 32-bit units.

Address: FFFF $840C_H$ + 40_H × Ch. No. n (n = 0 to 15)

Value after reset: 0000 0000_H

Bit	31	30	29	28	27	26	25	24	23	22	21	20	19	18	17	16
	—	—	—	—	ESE	DRS	—	—	—	—	—	CHNSEL2	CHNSEL1	SHNSEL0	CHNE1	CHNE0
Value after reset	0	0	0	0	0	0	0	0	0	0	0	0	0	0	0	0
R/W	R	R	R	R	R/W	R/W	R	R	R	R	R	R/W	R/W	R/W	R/W	R/W

Bit	15	14	13	12	11	10	9	8	7	6	5	4	3	2	1	0
	CCE	TCE	MLE	RLD2M1	RLD2M0	RLD1M1	RLD1M0	DACM1	DACM0	SACM1	SACM0	DS2	DS1	DS0	TRM1	TRM0
Value after reset	0	0	0	0	0	0	0	0	0	0	0	0	0	0	0	0
R/W	R/W	R/W	R/W	R/W	R/W	R/W	R/W	R/W	R/W	R/W	R/W	R/W	R/W	R/W	R/W	R/W

Table 7.43 DTCTn Register Contents (1/3)

Bit Position	Bit Name	Function
31 to 28	Reserved	When read, the value after reset is read. When writing, write the value after reset.
27	ESE	Transfer error case DMA transfer disable setting Configures whether a DMA cycle is executed when the DCSTn.ER bit is set due to DMA transfer error. If this bit is cleared to 0, even when the DCSTn.ER bit is set due to DMA transfer error, the following DMA cycles can be executed. If this bit is set to 1, the following DMA cycles are not executed when the DCSTn.ER bit is set due to DMA transfer error. 0: DMA cycles are executed while the DCSTn.ER bit is set. 1: DMA cycles are not executed while the DCSTn.ER bit is set.
26	DRS	DMA transfer request selection assignment Selects the type of DMA transfer requests to be accepted. 0: Software DMA transfer request 1: Hardware DMA transfer request
25 to 21	Reserved	When read, the value after reset is read. When writing, write the value after reset.
20 to 18	CHNSEL[2:0]	Next channel in the chain Specifies the next channel in the chain. The next channel must be another channel in the same DMAC. You cannot specify a channel in the different DMAC or in the DTS. You cannot specify the same channel for the next channel. (If you do, the correct operation is not guaranteed.)
17, 16	CHNE[1:0]	Chain enable Selects the chain function. 00: Disabled 01: Chain at the last transfer A chain request is generated at the completion of the DMA cycle in which the remaining transfer count is one. 10: (Forbidden. No guarantee of operation) 11: Always chain A chain request is generated at the completion of every DMA cycle.
15	CCE	Transfer count match interrupt enable If this bit is set, a transfer count match interrupt is generated at the completion of the DMA cycle in which the transfer count compare register and the remaining transfer count have the same value.

Table 7.43 DTCTn Register Contents (2/3)

Bit Position	Bit Name	Function
14	TCE	Transfer completion interrupt enable If this bit is set, a transfer completion interrupt is generated at the completion of the last transfer. A transfer completion notification interrupt is also generated at the completion of the last transfer when DCSTn.TC = 1.
13	MLE	Continuous transfer enable If this bit is set, the DTE bit is not cleared at the completion of DMA transfer. In addition, even if the TC bit is not cleared, DMA transfer starts when there is a DMA transfer request. 0: The DTE bit is cleared at the completion of DMA transfer. In addition, the next DMA transfer can start only after the TC bit is cleared. 1: The DTE bit is not cleared at the completion of DMA transfer. In addition, even if the TC bit is not cleared, DMA transfer starts when there is a DMA transfer request.
12, 11	RLD2M[1:0]	Reload function 2 setting Configures the reload function 2. 00: Reload function 2 is disabled. 01: Reload function 2 is enabled. The source address and address reload count are reloaded at the completion of the DMA cycle in which the address reload count is 1. 10: Reload function 2 is enabled. The destination address and address reload count are reloaded at the completion of the DMA cycle in which the address reload count is 1. 11: Reload function 2 is enabled. The source address, destination address, and address reload count are reloaded at the completion of the DMA cycle in which the address reload count is 1.
10, 9	RLD1M[1:0]	Reload function 1 setting Configures the reload function 1. 00: Reload function 1 is disabled. 01: Reload function 1 is enabled. The source address and transfer count are reloaded at the completion of the DMA cycle in which the remaining transfer count is 1. (If the reload function 2 is enabled, the address reload count is also reloaded.) 10: Reload function 1 is enabled. The destination address and transfer count are reloaded at the completion of the DMA cycle in which the remaining transfer count is 1. (If the reload function 2 is enabled, the address reload count is also reloaded.) 11: Reload function 1 is enabled. The source address, destination address, and transfer count are reloaded at the completion of the DMA cycle in which the remaining transfer count is 1. (If the reload function 2 is enabled, the address reload count is also reloaded.)
8, 7	DACM[1:0]	Destination address count direction Specifies the count direction of the destination address. DACM1 / DACM0 / Direction of Count 0 / 0 / Increment 0 / 1 / Decrement 1 / 0 / Fixed 1 / 1 / Forbidden (No guarantee of operation)
6, 5	SACM[1:0]	Source address count direction Specifies the count direction of the source address. SACM1 / SACM0 / Direction of Count 0 / 0 / Increment 0 / 1 / Decrement 1 / 0 / Fixed 0 / 1 / Forbidden (No guarantee of operation)

Table 7.43 DTCTn Register Contents (3/3)

Bit Position	Bit Name	Function
4 to 2	DS[2:0]	Transfer data size Specifies the transfer data size. DS2 / DS1 / DS0 / Transfer Data Size 0 / 0 / 0 / 8 bits 0 / 0 / 1 / 16 bits 0 / 1 / 0 / 32 bits 0 / 1 / 1 / 64 bits 1 / 0 / 0 / 128 bits Other than the above / Forbidden (No guarantee of operation)
1, 0	TRM[1:0]	Transfer mode Specifies the DMA transfer mode. 00: Single transfer 01: Block transfer 1 (The number of transfers is specified by the transfer count.) 10: Block transfer 2 (The number of transfers is specified by the address reload count.) 11: Forbidden (No guarantee of operation)

CAUTIONS

1. MLE bit is only set from “1” to “0” when the channel operation is enabled (DTE bit = 1). If values except MLE bit are changed, the correct operation is not guaranteed.
2. If forbidden settings are used for some of the bits, the correct operation is not guaranteed.

7.10.2.5 DRSAn — DMAC Reload Source Address Register

Access: This register can be read/written in 32-bit units.

Address: FFFF 8410_H + 40_H × Ch. No. n (n = 0 to 15)

Value after reset: 0000 0000_H

Bit	31	30	29	28	27	26	25	24	23	22	21	20	19	18	17	16
	RSA31	RSA30	RSA29	RSA28	RSA27	RSA26	RSA25	RSA24	RSA23	RSA22	RSA21	RSA20	RSA19	RSA18	RSA17	RSA16
Value after reset	0	0	0	0	0	0	0	0	0	0	0	0	0	0	0	0
R/W	R/W	R/W	R/W	R/W	R/W	R/W	R/W	R/W	R/W	R/W	R/W	R/W	R/W	R/W	R/W	R/W

Bit	15	14	13	12	11	10	9	8	7	6	5	4	3	2	1	0
	RSA15	RSA14	RSA13	RSA12	RSA11	RSA10	RSA9	RSA8	RSA7	RSA6	RSA5	RSA4	RSA3	RSA2	RSA1	RSA0
Value after reset	0	0	0	0	0	0	0	0	0	0	0	0	0	0	0	0
R/W	R/W	R/W	R/W	R/W	R/W	R/W	R/W	R/W	R/W	R/W	R/W	R/W	R/W	R/W	R/W	R/W

Table 7.44 DRSAn Register Contents

Bit Position	Bit Name	Function
31 to 0	RSA[31:0]	Reload source address Specifies the source address to be reloaded to the DMA source address register when the reload function 1 or reload function 2 is used.

CAUTION

DMA transfer for misaligned data is not supported. The possible lowest four bits of the address for each transfer data size is as follows. (× denotes an arbitrary one bit.) The correct operation is not guaranteed if you select any other setting.

Data Size	RSA3	RSA2	RSA1	RSA0
8 bits	×	×	×	×
16 bits	×	×	×	0
32 bits	×	×	0	0
64 bits	×	0	0	0
128 bits	0	0	0	0

7.10.2.6 DRDAn — DMAC Reload Destination Address Register

Access: This register can be read/written in 32-bit units.

Address: FFFF 8414_H + 40_H × Ch. No. n (n = 0 to 15)

Value after reset: 0000 0000_H

Bit	31	30	29	28	27	26	25	24	23	22	21	20	19	18	17	16
	RDA31	RDA30	RDA29	RDA28	RDA27	RDA26	RDA25	RDA24	RDA23	RDA22	RDA21	RDA20	RDA19	RDA18	RDA17	RDA16
Value after reset	0	0	0	0	0	0	0	0	0	0	0	0	0	0	0	0
R/W	R/W	R/W	R/W	R/W	R/W	R/W	R/W	R/W	R/W	R/W	R/W	R/W	R/W	R/W	R/W	R/W

Bit	15	14	13	12	11	10	9	8	7	6	5	4	3	2	1	0
	RDA15	RDA14	RDA13	RDA12	RDA11	RDA10	RDA9	RDA8	RDA7	RDA6	RDA5	RDA4	RDA3	RDA2	RDA1	RDA0
Value after reset	0	0	0	0	0	0	0	0	0	0	0	0	0	0	0	0
R/W	R/W	R/W	R/W	R/W	R/W	R/W	R/W	R/W	R/W	R/W	R/W	R/W	R/W	R/W	R/W	R/W

Table 7.45 DRDAn Register Contents

Bit Position	Bit Name	Function
31 to 0	RDA[31:0]	Reload destination address Specifies the destination address to be reloaded to the DMA destination address register when the reload function 1 or reload function 2 is used.

CAUTION

DMA transfer for misaligned data is not supported. The possible lowest four bits of the address for each transfer data size is as follows. (× denotes an arbitrary one bit.) The correct operation is not guaranteed if you select any other setting.

Data Size	RDA3	RDA2	RDA1	RDA0
8 bits	×	×	×	×
16 bits	×	×	×	0
32 bits	×	×	0	0
64 bits	×	0	0	0
128 bits	0	0	0	0

7.10.2.7 DRTCn — DMAC Reload Transfer Count Register

Access: This register can be read/written in 32-bit units.

Address: FFFF 8418_H + 40_H × Ch. No. n (n = 0 to 15)

Value after reset: 0000 0000_H

Bit	31	30	29	28	27	26	25	24	23	22	21	20	19	18	17	16
	RARC 15	RARC 14	RARC 13	RARC 12	RARC 11	RARC 10	RARC9	RARC8	RARC7	RARC6	RARC5	RARC4	RARC3	RARC2	RARC1	RARC0
Value after reset	0	0	0	0	0	0	0	0	0	0	0	0	0	0	0	0
R/W	R/W	R/W	R/W	R/W	R/W	R/W	R/W	R/W	R/W	R/W	R/W	R/W	R/W	R/W	R/W	R/W

Bit	15	14	13	12	11	10	9	8	7	6	5	4	3	2	1	0
	RTRC 15	RTRC 14	RTRC 13	RTRC 12	RTRC 11	RTRC 10	RTRC9	RTRC8	RTRC7	RTRC6	RTRC5	RTRC4	RTRC3	RTRC2	RTRC1	RTRC0
Value after reset	0	0	0	0	0	0	0	0	0	0	0	0	0	0	0	0
R/W	R/W	R/W	R/W	R/W	R/W	R/W	R/W	R/W	R/W	R/W	R/W	R/W	R/W	R/W	R/W	R/W

Table 7.46 DRTCn Register Contents

Bit Position	Bit Name	Function
31 to 16	RARC[15:0]	Reload address reload count Specifies the value to be loaded to the address reload count in the transfer count register at the time of reload when the reload function 2 is used.
15 to 0	RTRC[15:0]	Reload transfer count Specifies the value to be loaded to the transfer count in the transfer count register at the time of reload when the reload function 1 is used.

7.10.2.8 DTCCn — DMAC Transfer Count Compare Register

Access: This register can be read/written in 32-bit units.

Address: FFFF $841C_H$ + 40_H × Ch. No. n (n = 0 to 15)

Value after reset: $0000\ 0000_H$

Bit	31	30	29	28	27	26	25	24	23	22	21	20	19	18	17	16
	—	—	—	—	—	—	—	—	—	—	—	—	—	—	—	—
Value after reset	0	0	0	0	0	0	0	0	0	0	0	0	0	0	0	0
R/W	R	R	R	R	R	R	R	R	R	R	R	R	R	R	R	R

Bit	15	14	13	12	11	10	9	8	7	6	5	4	3	2	1	0
	CMC15	CMC14	CMC13	CMC12	CMC11	CMC10	CMC9	CMC8	CMC7	CMC6	CMC5	CMC4	CMC3	CMC2	CMC1	CMC0
Value after reset	0	0	0	0	0	0	0	0	0	0	0	0	0	0	0	0
R/W	R/W	R/W	R/W	R/W	R/W	R/W	R/W	R/W	R/W	R/W	R/W	R/W	R/W	R/W	R/W	R/W

Table 7.47 DTCCn Register Contents

Bit Position	Bit Name	Function
31 to 16	Reserved	When read, the value after reset is read. When writing, write the value after reset.
15 to 0	CMC[15:0]	Transfer count compare Configures the transfer count to be compared to the transfer count register. At the completion of the DMA cycle in which the remaining transfer count is the same as the value in this register, the transfer count match flag (DCSTn.CC) in the DMAC transfer status register is set. Furthermore, if the transfer count match interrupt enable (DTCTn.CCE) bit is 1, a transfer count match interrupt is generated. If 0000_H is set, comparison with the transfer count is disabled. In this case, the transfer count match flag in the DMAC transfer status register is never set, and a transfer count match interrupt is never generated.

CAUTION

It is forbidden to write to those bits when the channel operation is enabled (DTE bit = 1). If you do, the correct operation is not guaranteed.

7.10.2.9 DCENn — DMAC Channel Operation Enable Setting Register

Access: This register can be read/written in 32-bit units.

Address: FFFF 8420_H + 40_H × Ch. No. n (n = 0 to 15)

Value after reset: 0000 0000_H

Bit	31	30	29	28	27	26	25	24	23	22	21	20	19	18	17	16
	—	—	—	—	—	—	—	—	—	—	—	—	—	—	—	—
Value after reset	0	0	0	0	0	0	0	0	0	0	0	0	0	0	0	0
R/W	R	R	R	R	R	R	R	R	R	R	R	R	R	R	R	R

Bit	15	14	13	12	11	10	9	8	7	6	5	4	3	2	1	0
	—	—	—	—	—	—	—	—	—	—	—	—	—	—	—	DTE
Value after reset	0	0	0	0	0	0	0	0	0	0	0	0	0	0	0	0
R/W	R	R	R	R	R	R	R	R	R	R	R	R	R	R	R	R/W

Table 7.48 DCENn Register Contents

Bit Position	Bit Name	Function
31 to 1	Reserved	When read, the value after reset is read. When writing, write the value after reset.
0	DTE	Channel operation enable Specifies whether to enable or disable the transfer operation of the channel. If the DTE bit is 1, DMA transfer starts when there is a DMA transfer request. If the MLE bit is 0, the DTE bit is cleared automatically at the completion of the DMA transfer. In addition, if 0 is written to the DTE bit during DMA transfer, the DMA transfer is suspended. If 1 is written to the DTE bit during suspension, the suspension is cleared and the DMA transfer resumes. 0: Channel operation is disabled/Channel suspended 1: Channel operation is enabled/Channel suspension cleared

7.10.2.10 DCSTn — DMAC Transfer Status Register

Access: This register can be read in 32-bit units.

Address: FFFF 8424_H + 40_H × Ch. No. n (n = 0 to 15)

Value after reset: 0000 0000_H

Bit	31	30	29	28	27	26	25	24	23	22	21	20	19	18	17	16
	—	—	—	—	—	—	—	—	—	—	—	—	—	—	—	—
Value after reset	0	0	0	0	0	0	0	0	0	0	0	0	0	0	0	0
R/W	R	R	R	R	R	R	R	R	R	R	R	R	R	R	R	R

Bit	15	14	13	12	11	10	9	8	7	6	5	4	3	2	1	0
	—	—	—	—	ERWR	—	—	CY	ER	—	CC	TC	—	—	DR	SR
Value after reset	0	0	0	0	0	0	0	0	0	0	0	0	0	0	0	0
R/W	R	R	R	R	R	R	R	R	R	R	R	R	R	R	R	R

Table 7.49 DCSTn Register Contents (1/2)

Bit Position	Bit Name	Function
31 to 12	Reserved	When read, the value after reset is read.
11	ERWR	DMA Transfer Error occurring cycle This bit is updated at the same time as setting of the DMA transfer error flag (ER), indicating which cycle of read or write the DMA transfer error occurs in. This bit is not updated when a new DMA transfer error occurs after the ER bit has been set. If the ER bit is cleared, this bit is also cleared to 0. 0: DMA transfer error occurs in read cycle. 1: DMA transfer error occurs in write cycle.
10, 9	Reserved	When read, the value after reset is read.
8	CY	DMA cycle execution state This bit shows whether a DMA cycle is ongoing in this channel. 0: DMA cycle is not ongoing. 1: DMA cycle is ongoing.
7	ER	Transfer error flag This bit is set when DMA transfer error is generated. If this bit is 1 and the DTCTn.ESE bit is set, a DMA cycle is not executed when a DMA transfer request is generated. 0: No DMA transfer error is generated 1: DMA transfer error is generated
6	Reserved	When read, the value after reset is read.
5	CC	Transfer count match flag This bit is set at the completion of the DMA cycle in which the remaining transfer count is the same as the value set in the transfer compare register. 0: No compare match has occurred with the transfer count compare register. 1: Compare match has occurred with the transfer count compare register.
4	TC	Transfer completion flag This bit is set at the completion of the last transfer and shows whether the DMA transfer is complete. If the MLE bit is 0 and this bit is 1, a DMA cycle is not executed when a DMA transfer request is generated. 0: DMA transfer incomplete 1: DMA transfer complete
3, 2	Reserved	When read, the value after reset is read.

Table 7.49 DCSTn Register Contents (2/2)

Bit Position	Bit Name	Function
1	DR	Hardware DMA transfer request status This bit shows whether there is a hardware DMA transfer request (DMARQ) from the DTFR. This bit changes regardless of the value of the DTE bit when a hardware DMA transfer request from the DTFR is generated. If the software DMA transfer request is selected by the transfer request selection bit (DRS) in the DMAC transfer control register, this bit is not set even when a hardware DMA transfer request is input from the DTFR. 0: There is no hardware DMA transfer request 1: There is a hardware DMA transfer request
0	SR	Software DMA transfer request flag This bit shows whether there is a software DMA transfer request (DMARQ). This bit is automatically cleared at the completion of the last transfer. A user can set this bit by writing 1 to the SRS bit in the DMAC transfer status set register. In addition, a user can clear this bit by writing 1 to the SRC bit in the DMAC transfer status clear register, but if this is done, the ongoing DMA transfer is aborted and cannot be resumed. 0: There is no software DMA transfer request 1: There is a software DMA transfer request

7.10.2.11 DCSTSn — DMAC Transfer Status Set Register

Access: This register can be read/written in 32-bit units.

Address: FFFF 8428_H + 40_H × Ch. No. n (n = 0 to 15)

Value after reset: 0000 0000_H

Bit	31	30	29	28	27	26	25	24	23	22	21	20	19	18	17	16
	—	—	—	—	—	—	—	—	—	—	—	—	—	—	—	—
Value after reset	0	0	0	0	0	0	0	0	0	0	0	0	0	0	0	0
R/W	R	R	R	R	R	R	R	R	R	R	R	R	R	R	R	R

Bit	15	14	13	12	11	10	9	8	7	6	5	4	3	2	1	0
	—	—	—	—	—	—	—	—	—	—	—	—	—	—	—	SRS
Value after reset	0	0	0	0	0	0	0	0	0	0	0	0	0	0	0	0
R/W	R	R	R	R	R	R	R	R	R	R	R	R	R	R	R	R/W

Table 7.50 DCSTSn Set Register Contents

Bit Position	Bit Name	Function
31 to 1	Reserved	When read, the value after reset is read. When writing, write the value after reset.
0	SRS	Software DMA transfer request flag A user can set the software DMA transfer request flag (SR) by writing 1 to this bit. 0 is always read from this bit.

7.10.2.12 DCSTCn — DMAC Transfer Status Clear Register

Access: This register can be read/written in 32-bit units.

Address: FFFF $842C_H$ + 40_H × Ch. No. n (n = 0 to 15)

Value after reset: 0000 0000_H

Bit	31	30	29	28	27	26	25	24	23	22	21	20	19	18	17	16
	—	—	—	—	—	—	—	—	—	—	—	—	—	—	—	—
Value after reset	0	0	0	0	0	0	0	0	0	0	0	0	0	0	0	0
R/W	R	R	R	R	R	R	R	R	R	R	R	R	R	R	R	R

Bit	15	14	13	12	11	10	9	8	7	6	5	4	3	2	1	0
	—	—	—	—	—	—	—	—	ERC	—	CCC	TCC	—	—	—	SRC
Value after reset	0	0	0	0	0	0	0	0	0	0	0	0	0	0	0	0
R/W	R	R	R	R	R	R	R	R	R/W	R	R/W	R/W	R	R	R	R/W

Table 7.51 DCSTCn Register Contents

Bit Position	Bit Name	Function
31 to 8	Reserved	When read, the value after reset is read. When writing, write the value after reset.
7	ERC	Transfer error flag clear The DMA transfer error flag (ER) can be cleared by writing 1 to this bit. The read value of this bit is always 0.
6	Reserved	When read, the value after reset is read. When writing, write the value after reset.
5	CCC	Transfer count match flag clear The transfer count match flag (CC) can be cleared by writing 1 to this bit. The read value of this bit is always 0.
4	TCC	Transfer completion flag clear The transfer completion flag (TC) can be cleared by writing 1 to this bit. The read value of this bit is always 0.
3 to 1	Reserved	When read, the value after reset is read. When writing, write the value after reset.
0	SRC	Software DMA transfer request flag clear The software DMA transfer request flag (SR) can be cleared by writing 1 to this bit. The read value of this bit is always 0.

7.10.2.13 DTFRn — DTFR Setting Register

Access: This register can be read/written in 32-bit units.

Address: FFFF 8430_H + 40_H × Ch. No. n (n = 0 to 15)

Value after reset: 0000 0000_H

Bit	31	30	29	28	27	26	25	24	23	22	21	20	19	18	17	16
	—	—	—	—	—	—	—	—	—	—	—	—	—	—	—	—
Value after reset	0	0	0	0	0	0	0	0	0	0	0	0	0	0	0	0
R/W	R	R	R	R	R	R	R	R	R	R	R	R	R	R	R	R

Bit	15	14	13	12	11	10	9	8	7	6	5	4	3	2	1	0
	—	—	—	—	—	—	—	—	REQSEL6	REQSEL5	REQSEL4	REQSEL3	REQSEL2	REQSEL1	REQSEL0	REQEN
Value after reset	0	0	0	0	0	0	0	0	0	0	0	0	0	0	0	0
R/W	R	R	R	R	R	R	R	R	R/W	R/W	R/W	R/W	R/W	R/W	R/W	R/W

Table 7.52 DTFRn Register Contents

Bit Position	Bit Name	Function
31 to 8	Reserved	When read, the value after reset is read. When writing, write the value after reset.
7 to 1	REQSEL[6:0]	Hardware DMA transfer source selection Selects one out of 128 hardware DMA transfer sources as the hardware DMA transfer request. 000_0000: Selecting the DMACTRG[0] input : 111_1111: Selecting the DMACTRG[127] input Selection of the channels indicated as “reserved” in **Table 7.9, List of DMA Trigger Sources** is prohibited.
0	REQEN	Hardware DMA transfer source selection enable This bit enables/disables the hardware DMA transfer source selection. 0: Hardware DMA transfer source selection is disabled. 1: Hardware DMA transfer source selection is enabled. If this bit is 0, even when the hardware DMA transfer source selected by the REQSEL6-0 bits is activated, it is not recognized as a hardware DMA transfer request, and a hardware DMA transfer request is not generated.

CAUTIONS

1. DTFR.REQSEL can be changed while DTFR.REQEN is 0.
2. When the hardware DMA transfer source selection bit (DTFRn.REQEN) is cleared to 0 by software during block transfer by the DMAC, the ongoing block transfer is suspended since the request for transfer from the DTFR to the DMAC is masked after the completion of the currently ongoing DMA cycle.

7.10.2.14 DTFRRQn — DTFR Transfer Request Status Register

Access: This register can be read/written in 32-bit units.

Address: FFFF 8434_H + 40_H × Ch. No. n (n = 0 to 15)

Value after reset: 0000 0000_H

Bit	31	30	29	28	27	26	25	24	23	22	21	20	19	18	17	16
	—	—	—	—	—	—	—	—	—	—	—	—	—	—	—	—
Value after reset	0	0	0	0	0	0	0	0	0	0	0	0	0	0	0	0
R/W	R	R	R	R	R	R	R	R	R	R	R	R	R	R	R	R

Bit	15	14	13	12	11	10	9	8	7	6	5	4	3	2	1	0
	—	—	—	—	—	—	—	—	—	—	—	—	—	—	—	DRQ
Value after reset	0	0	0	0	0	0	0	0	0	0	0	0	0	0	0	0
R/W	R	R	R	R	R	R	R	R	R	R	R	R	R	R	R	R

Table 7.53 DTFRRQn Register Contents

Bit Position	Bit Name	Function
31 to 1	Reserved	When read, the value after reset is read.
0	DRQ	Hardware DMA transfer request status If this bit is set, it means that a hardware DMA transfer request exists or is retained. • If the hardware DMA transfer request is an edge detection type*1 This bit shows whether a hardware DMA transfer request generated by edge detection is retained. When the DMA transfer request acceptance signal (DMAAKn) from the DMAC is asserted, this bit is automatically cleared. A user can clear this bit by writing 1 to the DTFRRQCn.DRQC bit. • If the hardware DMA transfer request is a level input type*1 This bit shows whether there is a hardware DMA transfer request input from the outside. Even when the DMA transfer request acceptance signal (DMAAKn) from the DMAC is asserted, this bit is not automatically cleared. In addition, this bit is not cleared even when a user writes to the DTFRRQCn.DRQC bit. This bit changes regardless of the value of the DTFRn.REQEN bit when a hardware DMA transfer request from the outside is generated. 0: There is no hardware DMA transfer request 1: There is a hardware DMA transfer request

Note 1. Whether the hardware DMA transfer request is an edge detection type or level input type depends on the hardware DMA transfer source selected by DTFRn.REQSEL. This product's hardware DMA transfer request is only an edge detection type. Although the PSI50 and PSI51 reception interrupts (INTPSI50RI, INTPSI51RI) of the DMA trigger source are level-detected interrupts, an edge-detection signal is input to the DMAC as the hardware DMA transfer request.

7.10.2.15 DTFRRQCn — DTFR Transfer Request Clear Register

Access: This register can be read/written in 32-bit units.

Address: FFFF 8438_H + 40_H × Ch. No. n (n = 0 to 15)

Value after reset: 0000 0000_H

Bit	31	30	29	28	27	26	25	24	23	22	21	20	19	18	17	16
	—	—	—	—	—	—	—	—	—	—	—	—	—	—	—	—
Value after reset	0	0	0	0	0	0	0	0	0	0	0	0	0	0	0	0
R/W	R	R	R	R	R	R	R	R	R	R	R	R	R	R	R	R

Bit	15	14	13	12	11	10	9	8	7	6	5	4	3	2	1	0
	—	—	—	—	—	—	—	—	—	—	—	—	—	—	—	DRQC
Value after reset	0	0	0	0	0	0	0	0	0	0	0	0	0	0	0	0
R/W	R	R	R	R	R	R	R	R	R	R	R	R	R	R	R	R/W

Table 7.54 DTFRRQCn Register Contents

Bit Position	Bit Name	Function
31 to 1	Reserved	When read, the value after reset is read. When writing, write the value after reset.
0	DRQC	Hardware DMA transfer request clear If the hardware DMA transfer request is an edge detection type*1, a user can clear the DTFRRQn.DRQ bit by writing 1 to this bit. If the hardware DMA transfer request is a level input type*1, the DTFRRQn.DRQ bit cannot be cleared by writing to this bit. The read value of this bit is always 0.

Note 1. Whether the hardware DMA transfer request is an edge detection type or level input type depends on the hardware DMA transfer source selected by DTFRn.REQSEL. This product's hardware DMA transfer request is only an edge detection type.

7.11 DTS Channel Register

7.11.1 Transfer information of the DTS (TI)

7.11.1.1 Structure of the TI

The transfer information of the DTS is called TI. One set of TI consists of 32 bits. 8 sets of TI are assigned for each channel. The 8 sets of TI is called TI-A, TI-B, TI-C, TI-D, TI- E, TI-F, TI-G, and TI-H.

Figure 7.12 shows the structure of the TI.

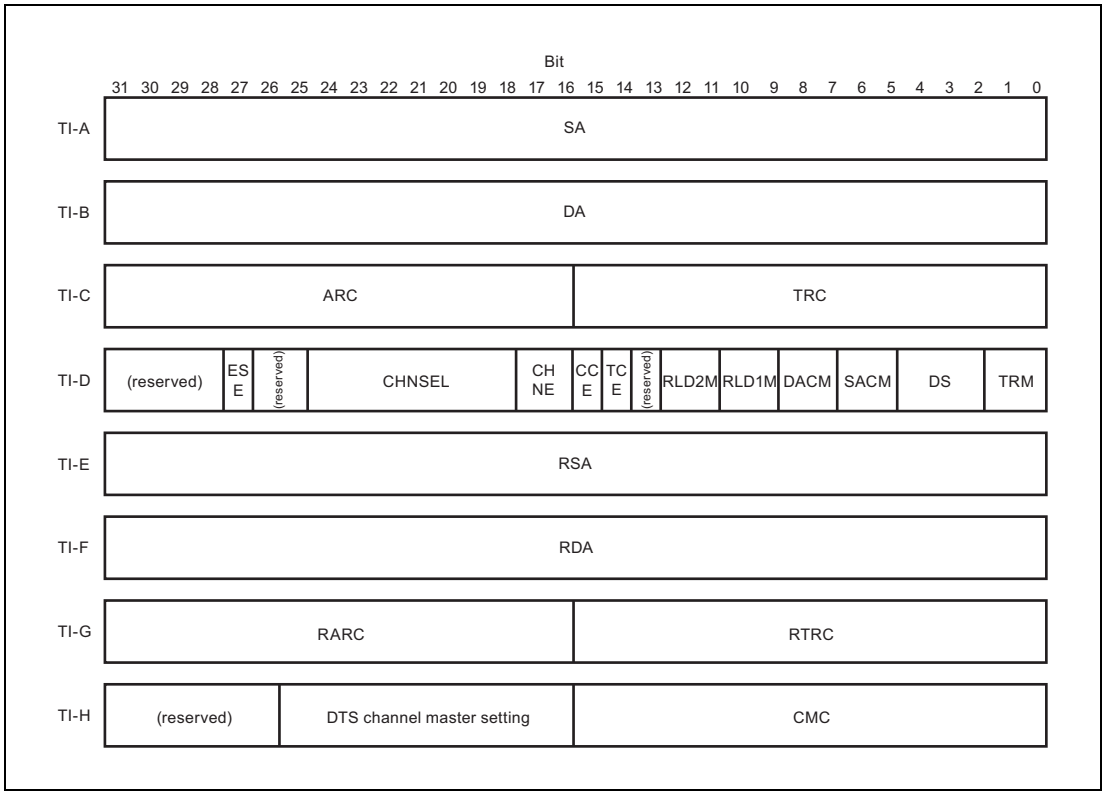

Figure 7.12 Structure of the TI

7.11.1.2 Organization of the TI in the DTSRAM

A user indirectly accesses the DTSRAM by way of the DTS channel registers for each channel and the DTS channel master setting registers.

Therefore, usually, a user does not have to think about the address organization of the TI in the DTSRAM.

As an exception, when ECC error occurs while the DTSRAM is read, the address of the ECC error in the DTSRAM is stored to the DTSRAM error register 2 (DTSER2), one of the global registers. In order to know which channel and TI have generated the error, you need to understand the address organization of the TI in the DTSRAM.

Figure 7.13 shows the address organization of the TI in the DTSRAM.

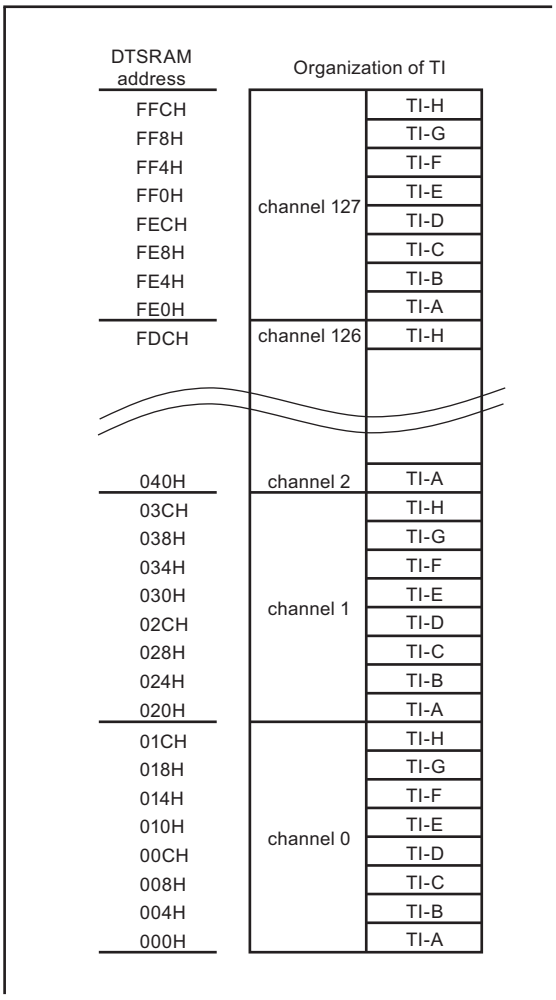

Figure 7.13 Organization of the TI in the DTSRAM

7.11.1.3 Accessing the TI

TI-A can be accessed by way of the DTS source address register (DTSAnnn) for each channel.

TI-B can be accessed by way of the DTS destination address register (DTDAnnn) for each channel.

TI-C can be accessed by way of the DTS transfer count register (DTTCnnn) for each channel.

TI-D can be accessed by way of the DTS transfer control register (DTTCTnnn) for each channel.

TI-E can be accessed by way of the DTS reload source address register (DTRSAnnn) for each channel.

TI-F can be accessed by way of the DTS reload destination address register (DTRDAnnn) for each channel.

TI-G can be accessed by way of the DTS reload transfer count register (DTRTCnnn) for each channel.

TI-H can be accessed by way of the channel master setting register (DTSnnnCM), which is a global register, and the transfer count compare register (DTTCCnnn) for each channel.

7.11.1.4 Caution about Accessing the TI

The data of the DTS channel master setting register and the data of the DTS transfer count compare register are stored to the same TI-H.

Access to the DTS channel master setting register (DTSnnnCM) is actually 32-bit access to the whole TI-H. Therefore, when you write to the DTS channel master setting register, the lower 16-bit data, which is the data for the DTS transfer count compare (CMC), is updated at the same time. When you read from the DTS channel master setting register, the value of the DTS transfer count compare (CMC) is read as the lower 16-bit data.

When you read from the DTS transfer count compare register (DTTCCnnn), 32-bit data is read from the TI-H, but only the lower 16-bit data is actually seen in the result of the register read. When you write to the DTS transfer count compare register (DTTCCnnn), lower 16-bit read/modify/write access to the 32-bit TI-H is used. Data in the TI immediately after the reset is undefined. It should be noted that, if you try to write to the DTS transfer count compare register (DTTCCnnn) before setting up the DTS channel master setting register, ECC error may be detected during the read of the read/modify/write access.

The bits 31-26 of the TI-H are not used, but you can read and write those bits by accessing the DTS channel master setting register. Our recommendation is as follows. When you write to those bits, write 0. When you read from those bits, discard the read value by software.

After the reset, the values in the DTSRAM, which stores the TI, are undefined. After the reset, if you read TI before you write to the TI, ECC error is generated.

Therefore, the first access to the following registers after the reset must be write access. The first access after the reset should never be read access.

- DTS source address register (DTSAnnn)
- DTS destination address register (DTDAnnn)
- DTS transfer count compare register (DTTCCnnn)
- DTS transfer control register (DTTCTnnn)
- DTS reload source address register (DTRSAnnn)
- DTS reload destination address register (DTRDAnnn)
- DTS reload transfer count register (DTRTCnnn)

- Channel master setting registers (DTSnnnCM)

In addition, after the reset, the first access to the DTS transfer count compare register (DTTCCnnn) must be always after write access to the channel master setting register (DTSnnnCM).

You can access the TI from a CPU while the DTS is executing DMA transfer. But if you do so, the following should be noted.

- While a channel is executing DMA transfer, the TI of the channel should not be updated by TI access from a CPU. If this situation happens, the result of the DMA transfer and the contents of the TI may mismatch.
- If TI access is requested from a CPU while a TI fetch or TI write back is executed, the TI access is executed after the completion of the TI fetch or TI write back. If a TI fetch or TI write back is requested while a TI access request from a CPU is processed, the TI fetch or TI write back is executed after the processing of the TI access is complete.

7.11.2 DTS Channel Register Address

Address = Base address "FFFF 9000_H" + Offset address

Offset Address	Register Symbol	Meaning	Access	
			Special Master	General Master
$0000_H + 40_H$ × [channel number]	DTSAnnn	DTS source address	Allowed	Allowed
$0004_H + 40_H$ × [channel number]	DTDAnnn	DTS destination address	Allowed	Allowed
$0008_H + 40_H$ × [channel number]	DTTCnnn	DTS transfer count	Allowed	Allowed
$000C_H + 40_H$ × [channel number]	DTTCTnnn	DTS transfer control	Allowed	Allowed
$0010_H + 40_H$ × [channel number]	DTRSAnnn	DTS reload source address	Allowed	Allowed
$0014_H + 40_H$ × [channel number]	DTRDAnnn	DTS reload destination address	Allowed	Allowed
$0018_H + 40_H$ × [channel number]	DTRTCnnn	DTS reload transfer count	Allowed	Allowed
$001C_H + 40_H$ × [channel number]	DTTCCnnn	DTS transfer count compare	Allowed	Allowed
$0020_H + 40_H$ × [channel number]	DTFSLnnn	DTSFSL operation setting	Allowed	Allowed
$0024_H + 40_H$ × [channel number]	DTFSTnnn	DTSFSL transfer request status	Allowed	Allowed
$0028_H + 40_H$ × [channel number]	DTFSSnnn	DTSFSL transfer request set	Allowed	Allowed
$002C_H + 40_H$ × [channel number]	DTFSCnnn	DTSFSL transfer request clear	Allowed	Allowed

Note 1. The [channel number] in the offset addresses is a number in the range from 0 to 127.
The "nnn" in the register symbols is a 3-digit number in the range from 000 to 127.

Note 2. Register access to the channels indicated as "reserved" in **Table 7.10, List of DTS Trigger Sources** is prohibited.

7.11.3 Details of DTS Channel Registers

The “nnn” in the register symbols indicates the DTS channel number (nnn = 000 to 127).

7.11.3.1 DTSAnnn — DTS Source Address Register

Access: This register can be read/written in 32-bit units.

Address: FFFF 9000_H + 40_H × Ch. No. n (n = 0 to 127)

Note. Register access to the channels indicated as “reserved” in **Table 7.10, List of DTS Trigger Sources** is prohibited.

Value after reset: Undefined

Bit	31	30	29	28	27	26	25	24	23	22	21	20	19	18	17	16
	SA31	SA30	SA29	SA28	SA27	SA26	SA25	SA24	SA23	SA22	SA21	SA20	SA19	SA18	SA17	SA16
Value after reset	Undefined	Undefined	Undefined	Undefined	Undefined	Undefined	Undefined	Undefined	Undefined	Undefined	Undefined	Undefined	Undefined	Undefined	Undefined	Undefined
R/W	R/W	R/W	R/W	R/W	R/W	R/W	R/W	R/W	R/W	R/W	R/W	R/W	R/W	R/W	R/W	R/W

Bit	15	14	13	12	11	10	9	8	7	6	5	4	3	2	1	0
	SA15	SA14	SA13	SA12	SA11	SA10	SA9	SA8	SA7	SA6	SA5	SA4	SA3	SA2	SA1	SA0
Value after reset	Undefined	Undefined	Undefined	Undefined	Undefined	Undefined	Undefined	Undefined	Undefined	Undefined	Undefined	Undefined	Undefined	Undefined	Undefined	Undefined
R/W	R/W	R/W	R/W	R/W	R/W	R/W	R/W	R/W	R/W	R/W	R/W	R/W	R/W	R/W	R/W	R/W

Table 7.55 DTSAnnn Register Contents

Bit Position	Bit Name	Function
31 to 0	SA[31:0]	Source address Specifies the DMA transfer source address. SA[31:0] is updated at the timing of the TI write back and retains the DMA transfer source address for the next DMA transfer.

CAUTION

DMA transfer for misaligned data is not supported. The possible lowest four bits of the address for each transfer data size is as follows. (× denotes an arbitrary one bit.) The correct operation is not guaranteed if you select any other setting.

Data Size	SA3	SA2	SA1	SA0
8 bits	×	×	×	×
16 bits	×	×	×	0
32 bits	×	×	0	0
64 bits	×	0	0	0
128 bits	0	0	0	0

7.11.3.2 DTDAnnn — DTS Destination Address Register

Access: This register can be read/written in 32-bit units.

Address: FFFF 9004_H + 40_H × Ch. No. n (n = 0 to 127)

Note. Register access to the channels indicated as "reserved" in **Table 7.10, List of DTS Trigger Sources** is prohibited.

Value after reset: Undefined

Bit	31	30	29	28	27	26	25	24	23	22	21	20	19	18	17	16
	DA31	DA30	DA29	DA28	DA27	DA26	DA25	DA24	DA23	DA22	DA21	DA20	DA19	DA18	DA17	DA16
Value after reset	Undefined	Undefined	Undefined	Undefined	Undefined	Undefined	Undefined	Undefined	Undefined	Undefined	Undefined	Undefined	Undefined	Undefined	Undefined	Undefined
R/W	R/W	R/W	R/W	R/W	R/W	R/W	R/W	R/W	R/W	R/W	R/W	R/W	R/W	R/W	R/W	R/W

Bit	15	14	13	12	11	10	9	8	7	6	5	4	3	2	1	0
	DA15	DA14	DA13	DA12	DA11	DA10	DA9	DA8	DA7	DA6	DA5	DA4	DA3	DA2	DA1	DA0
Value after reset	Undefined	Undefined	Undefined	Undefined	Undefined	Undefined	Undefined	Undefined	Undefined	Undefined	Undefined	Undefined	Undefined	Undefined	Undefined	Undefined
R/W	R/W	R/W	R/W	R/W	R/W	R/W	R/W	R/W	R/W	R/W	R/W	R/W	R/W	R/W	R/W	R/W

Table 7.56 DTDAnnn Register Contents

Bit Position	Bit Name	Function
31 to 0	DA[31:0]	Destination address Specifies the DMA transfer destination address. DA[31:0] is updated at the timing of the TI write back and retains the DMA transfer destination address for the next DMA transfer.

CAUTIONS

1. If DMA transfer error is generated in the read cycle of DMA transfer, the write cycle is not executed, but the destination address is updated.
2. DMA transfer for misaligned data is not supported. The possible lowest four bits of the address for each transfer data size is as follows. (× denotes an arbitrary one bit.) The correct operation is not guaranteed if you select any other setting.

Data Size	DA3	DA2	DA1	DA0
8 bits	×	×	×	×
16 bits	×	×	×	0
32 bits	×	×	0	0
64 bits	×	0	0	0
128 bits	0	0	0	0

7.11.3.3 DTTCnnn — DTS Transfer Count Register

Access: This register can be read/written in 32-bit units.

Address: FFFF 9008_H + 40_H × Ch. No. n (n = 0 to 127)

Note. Register access to the channels indicated as "reserved" in **Table 7.10, List of DTS Trigger Sources** is prohibited.

Value after reset: Undefined

Bit	31	30	29	28	27	26	25	24	23	22	21	20	19	18	17	16
	ARC15	ARC14	ARC13	ARC12	ARC11	ARC10	ARC9	ARC8	ARC7	ARC6	ARC5	ARC4	ARC3	ARC2	ARC1	ARC0
Value after reset	Undefined	Undefined	Undefined	Undefined	Undefined	Undefined	Undefined	Undefined	Undefined	Undefined	Undefined	Undefined	Undefined	Undefined	Undefined	Undefined
R/W	R/W	R/W	R/W	R/W	R/W	R/W	R/W	R/W	R/W	R/W	R/W	R/W	R/W	R/W	R/W	R/W

Bit	15	14	13	12	11	10	9	8	7	6	5	4	3	2	1	0
	TRC15	TRC14	TRC13	TRC12	TRC11	TRC10	TRC9	TRC8	TRC7	TRC6	TRC5	TRC4	TRC3	TRC2	TRC1	TRC0
Value after reset	Undefined	Undefined	Undefined	Undefined	Undefined	Undefined	Undefined	Undefined	Undefined	Undefined	Undefined	Undefined	Undefined	Undefined	Undefined	Undefined
R/W	R/W	R/W	R/W	R/W	R/W	R/W	R/W	R/W	R/W	R/W	R/W	R/W	R/W	R/W	R/W	R/W

Table 7.57 DTTCnnn Register Contents

Bit Position	Bit Name	Function
31 to 16	ARC[15:0]	Address reload count Specifies the number of transfers until the address reload when the reload function 2 is used, and also specifies the number of transfers when the block transfer 2 is used. When the reload function 2 or block transfer 2 is used, ARC[15:0] is decremented by one for every DMA cycle and updated at the timing of the TI write back. When the reload function 2 or block transfer 2 is not used, ARC[15:0] is not updated. If 0000_H is set, address reload is disabled. If the value at the start of a DMA cycle is 0000_H, subtraction from the address reload count does not proceed even after the DMA cycle.
15 to 0	TRC[15:0]	Transfer count Configures the number of transfers. TRC[15:0] is decremented by one whenever a DMA cycle is executed. It is updated at the timing of the TI write back. If the reload function is not used, after the last transfer is complete, the value at the completion (0000_H) is retained. If 0000_H is set, DMA transfer is not executed even when a DMA transfer request is accepted. **TRC[15:0] — Operation** 0000_H — Transfer is disabled or complete. 0001_H — The number of transfers or remaining transfers is 1. : — : $FFFF_H$ — The number of transfers or remaining transfers is 65535.

CAUTIONS

1. If transfer error is generated in the read cycle of DMA transfer, the write cycle is not executed, but the transfer count and the address reload count are updated.
2. Unlike a DMAC, "0000_H" in the transfer count of the DTS does not mean "65536 transfers" but means that transfer is disabled or complete.

7.11.3.4 DTTCTnnn — DTS Transfer Control Register

Access: This register can be read/written in 32-bit units.

Address: FFFF $900C_H$ + 40_H × Ch. No. n (n = 0 to 127)

Note. Register access to the channels indicated as “reserved” in **Table 7.10, List of DTS Trigger Sources** is prohibited.

Value after reset: Undefined

Bit	31	30	29	28	27	26	25	24	23	22	21	20	19	18	17	16
	—	—	—	—	ESE	—	—	CHNSEL6	CHNSEL5	CHNSEL4	CHNSEL3	CHNSEL2	CHNSEL1	CHNSEL0	CHNE1	CHNE0
Value after reset	Undefined	Undefined	Undefined	Undefined	Undefined	Undefined	Undefined	Undefined	Undefined	Undefined	Undefined	Undefined	Undefined	Undefined	Undefined	Undefined
R/W	R	R	R	R	R/W	R	R	R/W	R/W	R/W	R/W	R/W	R/W	R/W	R/W	R/W

Bit	15	14	13	12	11	10	9	8	7	6	5	4	3	2	1	0
	CCE	TCE	—	RLD2M1	RLD2M0	RLD1M1	RLD1M0	DACM1	DACM0	SACM1	SACM0	DS2	DS1	DS0	TRM1	TRM0
Value after reset	Undefined	Undefined	Undefined	Undefined	Undefined	Undefined	Undefined	Undefined	Undefined	Undefined	Undefined	Undefined	Undefined	Undefined	Undefined	Undefined
R/W	R/W	R/W	R	R/W	R/W	R/W	R/W	R/W	R/W	R/W	R/W	R/W	R/W	R/W	R/W	R/W

Table 7.58 DTTCTnnn Register Contents (1/3)

Bit Position	Bit Name	Function
31 to 28	Reserved	When read, an undefined value is read. When writing, always write 0.
27	ESE	Transfer error case DMA transfer abort setting Specifies whether to abort DMA transfer when DMA transfer error is generated. If this bit is cleared to 0, DMA transfer continues when DMA transfer error is generated. If this bit is set to 1, DMA transfer is aborted when DMA transfer error is generated. 0: DMA transfer continues when DMA transfer error is generated. 1: DMA transfer is aborted when DMA transfer error is generated.
26, 25	Reserved	When read, an undefined value is read. When writing, always write 0.
24 to 18	CHNSEL[6:0]	Next channel in the chain Specifies the next channel in the chain. The next channel must be another channel in the DTS. You cannot specify a channel in a DMAC. You cannot specify the same channel for the next channel. (If you do, the correct operation is not guaranteed.)
17, 16	CHNE1, 0	Chain enable Selects the chain function. 00: Disabled 01: Chain at the last transfer A chain request is generated at the completion of the DMA cycle in which the remaining transfer count is one. 10: (Forbidden. No guarantee of operation) 11: Always chain A chain request is generated at the completion of every DMA cycle.
15	CCE	Transfer count match interrupt enable If this bit is set, a transfer count match interrupt is generated at the completion of the DMA cycle in which the transfer count compare register and the remaining transfer count have the same value.
14	TCE	Transfer completion interrupt enable If this bit is set, a transfer completion interrupt is generated at the completion of the last transfer.
13	Reserved	When read, an undefined value is read. When writing, always write 0.

Table 7.58 DTTCTnnn Register Contents (2/3)

Bit Position	Bit Name	Function
12, 11	RLD2M1, 0	Reload function 2 setting Configures the reload function 2. 00: Reload function 2 is disabled. 01: Reload function 2 is enabled. The source address and address reload count are reloaded at the completion of the DMA cycle in which the address reload count is 1. 10: Reload function 2 is enabled. The destination address and address reload count are reloaded at the completion of the DMA cycle in which the address reload count is 1. 11: Reload function 2 is enabled. The source address, destination address, and address reload count are reloaded at the completion of the DMA cycle in which the address reload count is 1.
10, 9	RLD1M1, 0	Reload function 1 setting Configures the reload function 1. 00: Reload function 1 is disabled. 01: Reload function 1 is enabled. The source address and transfer count are reloaded at the completion of the DMA cycle in which the remaining transfer count is 1. (If the reload function 2 is enabled, the address reload count is also reloaded.) 10: Reload function 1 is enabled. The destination address and transfer count are reloaded at the completion of the DMA cycle in which the remaining transfer count is 1. (If the reload function 2 is enabled, the address reload count is also reloaded.) 11: Reload function 1 is enabled. The source address, destination address, and transfer count are reloaded at the completion of the DMA cycle in which the remaining transfer count is 1. (If the reload function 2 is enabled, the address reload count is also reloaded.)
8, 7	DACM1, 0	Destination address count direction Specifies the count direction of the destination address. DACM1 / DACM0 / Direction of Count 0 / 0 / Increment 0 / 1 / Decrement 1 / 0 / Fixed 1 / 1 / Forbidden (No guarantee of operation)
6, 5	SACM1, 0	Source address count direction Specifies the count direction of the source address. SACM1 / SACM0 / Direction of Count 0 / 0 / Increment 0 / 1 / Decrement 1 / 0 / Fixed 0 / 1 / Forbidden (No guarantee of operation)
4 to 2	DS[2:0]	Transfer data size Specifies the transfer data size. DS2 / DS1 / DS0 / Transfer Data Size 0 / 0 / 0 / 8 bits 0 / 0 / 1 / 16 bits 0 / 1 / 0 / 32 bits 0 / 1 / 1 / 64 bits 1 / 0 / 0 / 128 bits Other than the above / Forbidden (No guarantee of operation)

Table 7.58 DTTCTnnn Register Contents (3/3)

Bit Position	Bit Name	Function
1, 0	TRM1, 0	Transfer mode Specifies the DMA transfer mode. 00: Single transfer 01: Block transfer 1 (The number of transfers is specified by the transfer count.) 10: Block transfer 2 (The number of transfers is specified by the address reload count.) 11: Forbidden (No guarantee of operation)

CAUTIONS

1. If forbidden settings are used for some of the bits, the correct operation is not guaranteed.
2. The bits 31-28, bit 26, bit 25, and bit 13 are reserved. Our recommendation is as follows. When you write to those bits, write 0. When you read from those bits, discard the read value.

7.11.3.5 DTRSAnnn — DTS Reload Source Address Register

Access: This register can be read/written in 32-bit units.

Address: FFFF 9010_H + 40_H × Ch. No. n (n = 0 to 127)

Note. Register access to the channels indicated as “reserved” in **Table 7.10, List of DTS Trigger Sources** is prohibited.

Value after reset: Undefined

Bit	31	30	29	28	27	26	25	24	23	22	21	20	19	18	17	16
	RSA31	RSA30	RSA29	RSA28	RSA27	RSA26	RSA25	RSA24	RSA23	RSA22	RSA21	RSA20	RSA19	RSA18	RSA17	RSA16
Value after reset	Undefined	Undefined	Undefined	Undefined	Undefined	Undefined	Undefined	Undefined	Undefined	Undefined	Undefined	Undefined	Undefined	Undefined	Undefined	Undefined
R/W	R/W	R/W	R/W	R/W	R/W	R/W	R/W	R/W	R/W	R/W	R/W	R/W	R/W	R/W	R/W	R/W

Bit	15	14	13	12	11	10	9	8	7	6	5	4	3	2	1	0
	RSA15	RSA14	RSA13	RSA12	RSA11	RSA10	RSA9	RSA8	RSA7	RSA6	RSA5	RSA4	RSA3	RSA2	RSA1	RSA0
Value after reset	Undefined	Undefined	Undefined	Undefined	Undefined	Undefined	Undefined	Undefined	Undefined	Undefined	Undefined	Undefined	Undefined	Undefined	Undefined	Undefined
R/W	R/W	R/W	R/W	R/W	R/W	R/W	R/W	R/W	R/W	R/W	R/W	R/W	R/W	R/W	R/W	R/W

Table 7.59 DTRSAnnn Register Contents

Bit Position	Bit Name	Function
31 to 0	RSA[31:0]	Reload source address Specifies the source address to be reloaded when the reload function 1 or reload function 2 is used.

CAUTION

DMA transfer for misaligned data is not supported. The possible lowest four bits of the address for each transfer data size is as follows. (× denotes an arbitrary one bit.) The correct operation is not guaranteed if you select any other setting.

Data Size	RSA3	RSA2	RSA1	RSA0
8 bits	×	×	×	×
16 bits	×	×	×	0
32 bits	×	×	0	0
64 bits	×	0	0	0
128 bits	0	0	0	0

7.11.3.6 DTRDAnnn — DTS Reload Destination Address Register

Access: This register can be read/written in 32-bit units.

Address: FFFF 9014_H + 40_H × Ch. No. n (n = 0 to 127)

Note. Register access to the channels indicated as “reserved” in **Table 7.10, List of DTS Trigger Sources** is prohibited.

Value after reset: Undefined

Bit	31	30	29	28	27	26	25	24	23	22	21	20	19	18	17	16
	RDA31	RDA30	RDA29	RDA28	RDA27	RDA26	RDA25	RDA24	RDA23	RDA22	RDA21	RDA20	RDA19	RDA18	RDA17	RDA16
Value after reset	Undefined	Undefined	Undefined	Undefined	Undefined	Undefined	Undefined	Undefined	Undefined	Undefined	Undefined	Undefined	Undefined	Undefined	Undefined	Undefined
R/W	R/W	R/W	R/W	R/W	R/W	R/W	R/W	R/W	R/W	R/W	R/W	R/W	R/W	R/W	R/W	R/W

Bit	15	14	13	12	11	10	9	8	7	6	5	4	3	2	1	0
	RDA15	RDA14	RDA13	RDA12	RDA11	RDA10	RDA9	RDA8	RDA7	RDA6	RDA5	RDA4	RDA3	RDA2	RDA1	RDA0
Value after reset	Undefined	Undefined	Undefined	Undefined	Undefined	Undefined	Undefined	Undefined	Undefined	Undefined	Undefined	Undefined	Undefined	Undefined	Undefined	Undefined
R/W	R/W	R/W	R/W	R/W	R/W	R/W	R/W	R/W	R/W	R/W	R/W	R/W	R/W	R/W	R/W	R/W

Table 7.60 DTRDAnnn Register Contents

Bit Position	Bit Name	Function
31 to 0	RDA[31:0]	Reload destination address Specifies the destination address to be reloaded when the reload function 1 or reload function 2 is used.

CAUTION

DMA transfer for misaligned data is not supported. The possible lowest four bits of the address for each transfer data size is as follows. (× denotes an arbitrary one bit.) The correct operation is not guaranteed if you select any other setting.

Data Size	RDA3	RDA2	RDA1	RDA0
8 bits	×	×	×	×
16 bits	×	×	×	0
32 bits	×	×	0	0
64 bits	×	0	0	0
128 bits	0	0	0	0

7.11.3.7 DTRTCnnn — DTS Reload Transfer Count Register

Access: This register can be read/written in 32-bit units.

Address: FFFF 9018_H + 40_H × Ch. No. n (n = 0 to 127)

Note. Register access to the channels indicated as “reserved” in **Table 7.10, List of DTS Trigger Sources** is prohibited.

Value after reset: Undefined

Bit	31	30	29	28	27	26	25	24	23	22	21	20	19	18	17	16
	RARC 15	RARC 14	RARC 13	RARC 12	RARC 11	RARC 10	RARC 9	RARC 8	RARC 7	RARC 6	RARC 5	RARC 4	RARC 3	RARC 2	RARC 1	RARC 0
Value after reset	Undefined	Undefined	Undefined	Undefined	Undefined	Undefined	Undefined	Undefined	Undefined	Undefined	Undefined	Undefined	Undefined	Undefined	Undefined	Undefined
R/W	R/W	R/W	R/W	R/W	R/W	R/W	R/W	R/W	R/W	R/W	R/W	R/W	R/W	R/W	R/W	R/W

Bit	15	14	13	12	11	10	9	8	7	6	5	4	3	2	1	0
	RTRC 15	RTRC 14	RTRC 13	RTRC 12	RTRC 11	RTRC 10	RTRC 9	RTRC 8	RTRC 7	RTRC 6	RTRC 5	RTRC 4	RTRC 3	RTRC 2	RTRC 1	RTRC 0
Value after reset	Undefined	Undefined	Undefined	Undefined	Undefined	Undefined	Undefined	Undefined	Undefined	Undefined	Undefined	Undefined	Undefined	Undefined	Undefined	Undefined
R/W	R/W	R/W	R/W	R/W	R/W	R/W	R/W	R/W	R/W	R/W	R/W	R/W	R/W	R/W	R/W	R/W

Table 7.61 DTRTCnnn Register Contents

Bit Position	Bit Name	Function
31 to 16	RARC[15:0]	Reload address reload count Specifies the value to be reloaded to the address reload count when the reload function 2 is used.
15 to 0	RTRC[15:0]	Reload transfer count Specifies the value to be reloaded to the transfer count when the reload function 1 is used.

RTRC[15:0]	Operation
0000_H	No DMA transfer
0001_H	1 transfer
:	:
$FFFF_H$	65535 transfers

7.11.3.8 DTTCCnnn — DTS Transfer Count Compare Register

Access: This register can be read/written in 32-bit units.

Address: FFFF $901C_H$ + 40_H × Ch. No. n (n = 0 to 127)

Note. Register access to the channels indicated as “reserved” in **Table 7.10, List of DTS Trigger Sources** is prohibited.

Value after reset: Undefined

Bit	31	30	29	28	27	26	25	24	23	22	21	20	19	18	17	16
	—	—	—	—	—	—	—	—	—	—	—	—	—	—	—	—
Value after reset	Undefined	Undefined	Undefined	Undefined	Undefined	Undefined	Undefined	Undefined	Undefined	Undefined	Undefined	Undefined	Undefined	Undefined	Undefined	Undefined
R/W	R	R	R	R	R	R	R	R	R	R	R	R	R	R	R	R

Bit	15	14	13	12	11	10	9	8	7	6	5	4	3	2	1	0
	CMC15	CMC14	CMC13	CMC12	CMC11	CMC10	CMC9	CMC8	CMC7	CMC6	CMC5	CMC4	CMC3	CMC2	CMC1	CMC0
Value after reset	Undefined	Undefined	Undefined	Undefined	Undefined	Undefined	Undefined	Undefined	Undefined	Undefined	Undefined	Undefined	Undefined	Undefined	Undefined	Undefined
R/W	R/W	R/W	R/W	R/W	R/W	R/W	R/W	R/W	R/W	R/W	R/W	R/W	R/W	R/W	R/W	R/W

Table 7.62 DTTCCnnn Register Contents

Bit Position	Bit Name	Function
31 to 16	Reserved	When read, an undefined value is read. When writing, always write 0.
15 to 0	CMC[15:0]	Transfer count compare Configures the transfer count to be compared to the transfer count register. If the transfer count match interrupt enable (DTTCTnnn.CCE) bit in the DTS transfer control register is 1, a transfer count match interrupt is generated at the completion of the DMA cycle in which the remaining transfer count is the same as the value in this register. If 0000_H is set, comparison with the transfer count is disabled. In this case, a transfer count match interrupt is not generated.

CAUTION

This register must be accessed after the DTS channel master setting register is set up.

If you access this register without setting up the DTS channel master setting register after the reset, ECC error may be generated during access to this register.

7.11.3.9 DTFSLnnn — DTSFSL Operation Setting Register

Access: This register can be read/written in 32-bit units.

Address: FFFF 9020_H + 40_H × Ch. No. n (n = 0 to 127)

Note. Register access to the channels indicated as “reserved” in **Table 7.10, List of DTS Trigger Sources** is prohibited.

Value after reset: 0000 0000_H

Bit	31	30	29	28	27	26	25	24	23	22	21	20	19	18	17	16
	—	—	—	—	—	—	—	—	—	—	—	—	—	—	—	—
Value after reset	0	0	0	0	0	0	0	0	0	0	0	0	0	0	0	0
R/W	R	R	R	R	R	R	R	R	R	R	R	R	R	R	R	R

Bit	15	14	13	12	11	10	9	8	7	6	5	4	3	2	1	0
	—	—	—	—	—	—	—	—	—	—	—	—	—	—	—	REQEN
Value after reset	0	0	0	0	0	0	0	0	0	0	0	0	0	0	0	0
R/W	R	R	R	R	R	R	R	R	R	R	R	R	R	R	R	R/W

Table 7.63 DTFSLnnn Register Contents

Bit Position	Bit Name	Function
31 to 1	Reserved	When read, the value after reset is read. When writing, write the value after reset.
0	REQEN	DMA transfer request enable This bit selects whether a DMA transfer request from this channel retained in the DTSFSL is used as a candidate in DTS channel arbitration. 0: A DMA transfer request from this channel is not used as a candidate in DTS channel arbitration. 1: A DMA transfer request from this channel is used as a candidate in DTS channel arbitration. If this bit is 0, even if the DTSFSL retains a DMA transfer request, this channel is not a candidate in DTS channel arbitration inside the DTSFSL, and consequently a DMA transfer request from this channel is not generated.

7.11.3.10 DTFSTnnn — DTSFSL Transfer Request Status Register

Access: This register can be read in 32-bit units.

Address: FFFF 9024_H + 40_H × Ch. No. n (n = 0 to 127)

Note. Register access to the channels indicated as “reserved” in **Table 7.10, List of DTS Trigger Sources** is prohibited.

Value after reset: $0000\ 0000_H$

Bit	31	30	29	28	27	26	25	24	23	22	21	20	19	18	17	16
	—	—	—	—	—	—	—	—	—	—	—	—	—	—	—	—
Value after reset	0	0	0	0	0	0	0	0	0	0	0	0	0	0	0	0
R/W	R	R	R	R	R	R	R	R	R	R	R	R	R	R	R	R

Bit	15	14	13	12	11	10	9	8	7	6	5	4	3	2	1	0
	—	—	—	—	—	—	—	—	—	—	—	—	—	—	—	DRQ
Value after reset	0	0	0	0	0	0	0	0	0	0	0	0	0	0	0	0
R/W	R	R	R	R	R	R	R	R	R	R	R	R	R	R	R	R

Table 7.64 DTFSTnnn Register Contents

Bit Position	Bit Name	Function
31 to 1	Reserved	When read, the value after reset is read.
0	DRQ	DMA transfer request pending This bit shows whether a DMA transfer request of this channel is pending. This bit is set when a rising edge is detected in the hardware transfer source input, or when software writes 1 to the DTFSSnnn.DRQS bit. This bit is automatically cleared when the DMA transfer request acceptance from the DTS is generated while the DTSFSL is requesting DMA transfer of this channel. Alternatively, software can clear this bit by writing 1 to the DTFSCnnn.DRQC bit. 0: A DMA transfer request is not pending. 1: A DMA transfer request is pending.

7.11.3.11 DTFSSnnn — DTSFSL Transfer Request Set Register

Access: This register can be read/written in 32-bit units.

Address: FFFF 9028_H + 40_H × Ch. No. n (n = 0 to 127)

Note: Register access to the channels indicated as “reserved” in **Table 7.10, List of DTS Trigger Sources** is prohibited.

Value after reset: 0000 0000_H

Bit	31	30	29	28	27	26	25	24	23	22	21	20	19	18	17	16
	—	—	—	—	—	—	—	—	—	—	—	—	—	—	—	—
Value after reset	0	0	0	0	0	0	0	0	0	0	0	0	0	0	0	0
R/W	R	R	R	R	R	R	R	R	R	R	R	R	R	R	R	R

Bit	15	14	13	12	11	10	9	8	7	6	5	4	3	2	1	0
	—	—	—	—	—	—	—	—	—	—	—	—	—	—	—	DRQS
Value after reset	0	0	0	0	0	0	0	0	0	0	0	0	0	0	0	0
R/W	R	R	R	R	R	R	R	R	R	R	R	R	R	R	R	R/W

Table 7.65 DTFSSnnn Register Contents

Bit Position	Bit Name	Function
31 to 1	Reserved	When read, the value after reset is read. When writing, write the value after reset.
0	DRQS	DMA transfer request set A user can set the DTFSTnnn.DRQ bit by writing 1 to this bit. The read value of this bit is always 0.

7.11.3.12 DTFSCnnn — DTSFSL Transfer Request Clear Register

Access: This register can be read/written in 32-bit units.

Address: FFFF $902C_H$ + 40_H × Ch. No. n (n = 0 to 127)

Note. Register access to the channels indicated as “reserved” in **Table 7.10, List of DTS Trigger Sources** is prohibited.

Value after reset: $0000\ 0000_H$

Bit	31	30	29	28	27	26	25	24	23	22	21	20	19	18	17	16
	—	—	—	—	—	—	—	—	—	—	—	—	—	—	—	—
Value after reset	0	0	0	0	0	0	0	0	0	0	0	0	0	0	0	0
R/W	R	R	R	R	R	R	R	R	R	R	R	R	R	R	R	R

Bit	15	14	13	12	11	10	9	8	7	6	5	4	3	2	1	0
	—	—	—	—	—	—	—	—	—	—	—	—	—	—	—	DRQC
Value after reset	0	0	0	0	0	0	0	0	0	0	0	0	0	0	0	0
R/W	R	R	R	R	R	R	R	R	R	R	R	R	R	R	R	R/W

Table 7.66 DTFSCnnn Register Contents

Bit Position	Bit Name	Function
31 to 1	Reserved	When read, the value after reset is read. When writing, write the value after reset.
0	DRQC	DMA transfer request clear A user can clear the DTFSTnnn.DRQ bit by writing 1 to this bit. The read value of this bit is always 0.

Section 8 Reset

8.1 Features

- The $\overline{\text{RESET}}$ pin incorporates a noise filter.
- The source of a reset can be determined by referring the reset source determination register (RESF).
- The CPU can assert reset by setting a register.

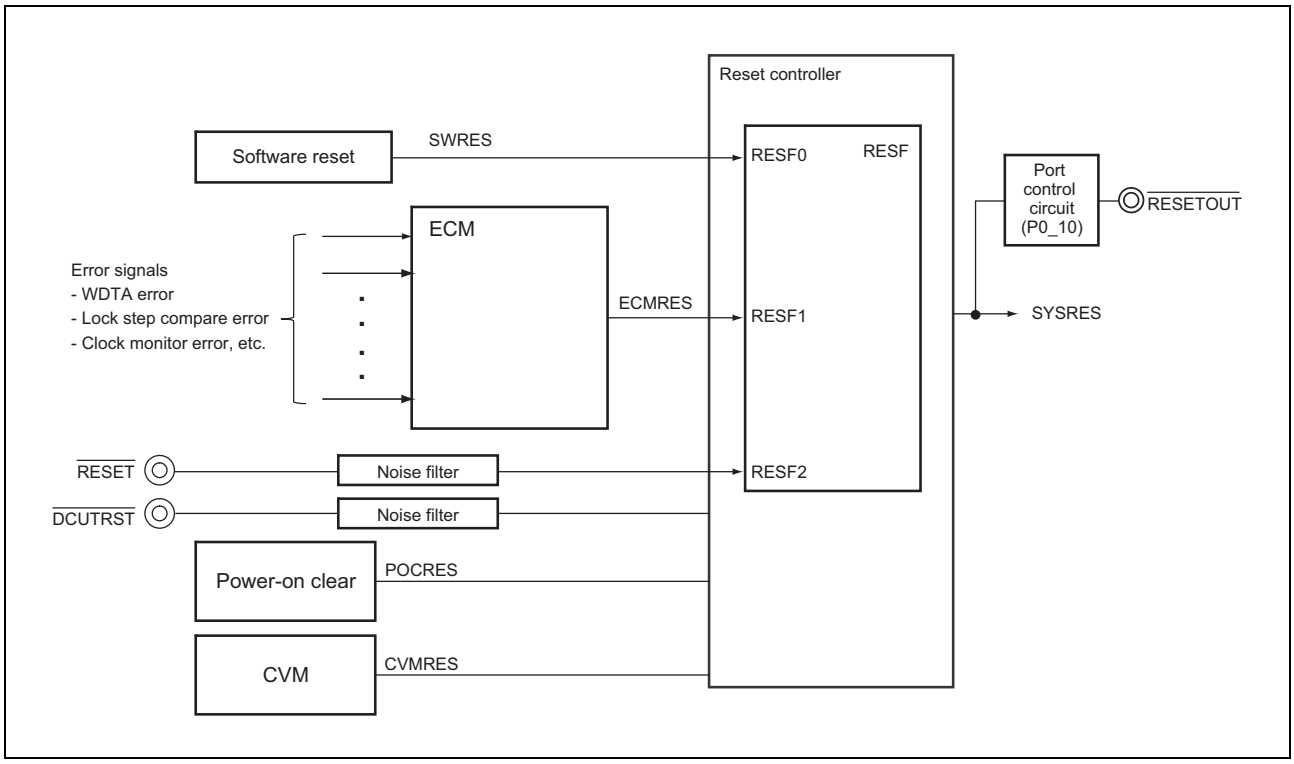

Figure 8.1 Reset Circuit

8.2 Overview

Multiple system reset functions are provided for initializing the microcontroller and its registers.

Resets have the following sources.

Table 8.1 Reset Sources

Type	Reset Source		Abbreviation	Condition for Generation
Power-on reset	POC		POCRES	The supply voltage (VCC) falling below the POC reference voltage
Debug reset	Debug reset		DBRES	Operation of the debugger GUI
Pin reset	Pin reset		EXTRES	The low level being input to an external pin ($\overline{\text{RESET}}$)
Internal reset	CVM reset		CVMRES	Detection of abnormal voltage (high or low voltage) by CVM
	Software reset		SWRES	Execution of software for a setting by the CPU
	BIST reset		BISTRES	BIST being completed
	ECM reset		ECMRES	An ECM error being detected
		LVI	LVIRES	The detection voltage falling below the reference voltage
		Clock monitor	CLMRES	The CLMA detecting an abnormal frequency
		Watchdog timer	WDTRES	An overflow of the watchdog timer

System reset SYSRES is generated when any reset source above is generated.

8.2.1 Reset Output ($\overline{\text{RESETOUT}}$)

Any of the reset resources is generated, a reset output ($\overline{\text{RESETOUT}}$) is externally output. A reset output can be used to reset the external device at the same timing of reset generation in the microcontroller.

The figure below shows $\overline{\text{RESETOUT}}$ output operation.

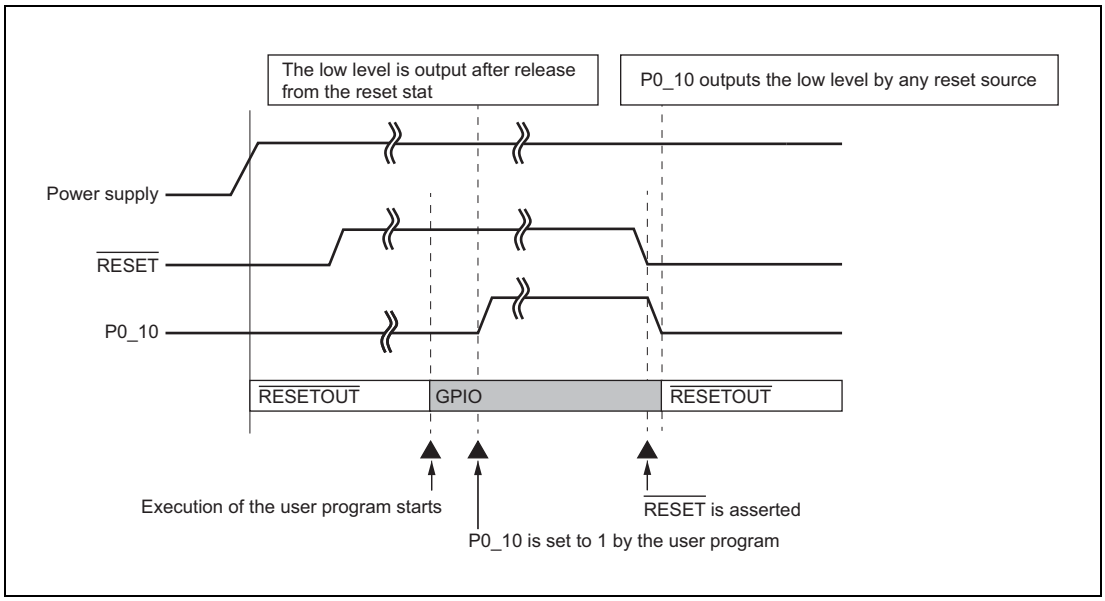

Figure 8.2 P0_10 Pin (RESETOUT Signal) Operation during Reset and after Release from the Reset State

8.3 Register Specifications

8.3.1 List of Registers

Table 8.2 List of Registers

Reset Source Determination

Address	Register Name	Description	Access Width	Value after Reset	Access Protection
FFF8 2800_H	RESF	Reset source determination register	32	0000 $000x_H$	
FFF8 2808_H	RESFC	Reset source clear register	32	0000 0000_H	

Power-On Detection

Address	Register Name	Description	Access Width	Value after Reset	Access Protection
FFF8 $AC10_H$	POF	Power-on clear flag register	32	0000 $000x_H$	
FFF8 $AC14_H$	POFC	Power-on clear flag clear register	32	0000 0000_H	

Software Reset Control

Address	Register Name	Description	Access Width	Value after Reset	Access Protection
FFF8 $AC18_H$	SWRESA	Software Reset Request Register	32	0000 0000_H	PROT1PHCMD

8.3.2 RESF — Reset Source Determination Register

This register determines the reset source.

The flags of this register can be cleared by the RESFC register and can also be cleared by POCRES, CVMRES, and DBRES.

Access: This register is readable in 32-bit units.

Address: FFF8 2800_H

Value after reset: The value differs with the reset factor.

Bit	31	30	29	28	27	26	25	24	23	22	21	20	19	18	17	16
	—	—	—	—	—	—	—	—	—	—	—	—	—	—	—	—
Value after reset	0	0	0	0	0	0	0	0	0	0	0	0	0	0	0	0
R/W	R	R	R	R	R	R	R	R	R	R	R	R	R	R	R	R

Bit	15	14	13	12	11	10	9	8	7	6	5	4	3	2	1	0
	—	—	—	—	—	—	—	—	—	—	—	—	—	RESF2	RESF1	RESF0
Value after reset	0	0	0	0	0	0	0	0	0	0	0	0	0	*1	*1	*1
R/W	R	R	R	R	R	R	R	R	R	R	R	R	R	R	R	R

Note 1. The value differs with the reset factor.

Table 8.3 RESF Register Contents

Bit Position	Bit Name	Function
31 to 3	Reserved	When read, the value after reset is read.
2	RESF2	Pin Reset Indicates that a reset event occurred. 0: Event not occurred 1: Event occurred
1	RESF1	ECM Reset Indicates that a reset event occurred. 0: Event not occurred 1: Event occurred
0	RESF0	Software Reset Indicates that a reset event occurred. 0: Event not occurred 1: Event occurred

8.3.3 RESFC — Reset Source Clear Register

This register clears the reset source indicated by the RESF register.

This register is always read as 00h.

Access: This register can only be written in 32-bit units.

Address: FFF8 2808_H

Value after reset: This register is initialized by various types of reset.

Bit	31	30	29	28	27	26	25	24	23	22	21	20	19	18	17	16
	—	—	—	—	—	—	—	—	—	—	—	—	—	—	—	—
Value after reset	0	0	0	0	0	0	0	0	0	0	0	0	0	0	0	0
R/W	R	R	R	R	R	R	R	R	R	R	R	R	R	R	R	R

Bit	15	14	13	12	11	10	9	8	7	6	5	4	3	2	1	0
	—	—	—	—	—	—	—	—	—	—	—	—	—	RESFC 2	RESFC 1	RESFC 0
Value after reset	0	0	0	0	0	0	0	0	0	0	0	0	0	0	0	0
R/W	R	R	R	R	R	R	R	R	R	R	R	R	R	W	W	W

Table 8.4 RESFC Register Contents

Bit Position	Bit Name	Function
31 to 3	Reserved	When read, the value after reset is read. When writing, write the value after reset.
2	RESFC2	Pin Reset Clears the status bit. 0: Not clear 1: Clear
1	RESFC1	ECM reset Clears the status bit. 0: Not clear 1: Clear
0	RESFC0	Software reset Clears the status bit. 0: Not clear 1: Clear

8.3.4 POF — Power-On Clear Flag Register

This register determines whether VCC detects the transition of the power from off to on. The POF flag becomes “1” (cold start) when VCC detects the transition of the power from off to on.

Note that this register does not change even when “0” or “1” is written.

This register becomes “0” when “0” or “1” is written to the POFC bit of the POFC register.

The POF flag does not change even when other reset sources occur while the POF flag has been set to “0” (warm start can be determined).

Access: This register is readable in 32-bit units.

Address: FFF8 AC10$_H$

Value after reset: Undefined

Bit	31	30	29	28	27	26	25	24	23	22	21	20	19	18	17	16
	—	—	—	—	—	—	—	—	—	—	—	—	—	—	—	—
Value after reset	0	0	0	0	0	0	0	0	0	0	0	0	0	0	0	0
R/W	R	R	R	R	R	R	R	R	R	R	R	R	R	R	R	R

Bit	15	14	13	12	11	10	9	8	7	6	5	4	3	2	1	0
	—	—	—	—	—	—	—	—	—	—	—	—	—	—	—	POF
Value after reset	0	0	0	0	0	0	0	0	0	0	0	0	0	0	0	x
R/W	R	R	R	R	R	R	R	R	R	R	R	R	R	R	R	R

Table 8.5 POF Register Contents

Bit Position	Bit Name	Function
31 to 1	Reserved	When read, the value after reset is read.
0	POF	Cold start event detection Indicates that a cold start event occurred. 0: Not occurred 1: Occurred

8.3.5 POFC — Power-On Clear Flag Clear Register

This register clears the POF register.

Access: This register can only be written in 32-bit units.

Address: FFF8 AC14$_H$

Value after reset: 0000 0000$_H$

Bit	31	30	29	28	27	26	25	24	23	22	21	20	19	18	17	16
	—	—	—	—	—	—	—	—	—	—	—	—	—	—	—	—
Value after reset	0	0	0	0	0	0	0	0	0	0	0	0	0	0	0	0
R/W	R	R	R	R	R	R	R	R	R	R	R	R	R	R	R	R

Bit	15	14	13	12	11	10	9	8	7	6	5	4	3	2	1	0
	—	—	—	—	—	—	—	—	—	—	—	—	—	—	—	POFC
Value after reset	0	0	0	0	0	0	0	0	0	0	0	0	0	0	0	0
R/W	R	R	R	R	R	R	R	R	R	R	R	R	R	R	R	W

Table 8.6 POFC Register Contents

Bit Position	Bit Name	Function
31 to 1	Reserved	When read, the value after reset is read. When writing, write the value after reset.
0	POFC	The cold start event detection bit in the power-on clear flag register is cleared to 0 when 0 or 1 is written to the POFC bit in the POFC register.

8.3.6 SWRESA — Software Reset Request Register

This register generates an internal reset when accessed.

A software reset is issued when 1 is written to SWRESA.

Writing to this register is protected by a special sequence of instructions by using the protection command register PROT1PHCMD.

For details, see **Section 4.3, Write-Protected Registers**.

Access: This register can be read/written in 32-bit units.

Address: FFF8 AC18$_H$

Value after reset: 0000 0000$_H$ This register is initialized by a reset from any source.

Bit	31	30	29	28	27	26	25	24	23	22	21	20	19	18	17	16
	—	—	—	—	—	—	—	—	—	—	—	—	—	—	—	—
Value after reset	0	0	0	0	0	0	0	0	0	0	0	0	0	0	0	0
R/W	R	R	R	R	R	R	R	R	R	R	R	R	R	R	R	R

Bit	15	14	13	12	11	10	9	8	7	6	5	4	3	2	1	0
	—	—	—	—	—	—	—	—	—	—	—	—	—	—	—	SWRESA
Value after reset	0	0	0	0	0	0	0	0	0	0	0	0	0	0	0	0
R/W	R	R	R	R	R	R	R	R	R	R	R	R	R	R	R	R/W

Table 8.7 SWRESA Register Contents

Bit Position	Bit Name	Function
31 to 1	Reserved	When read, the value after reset is read. When writing, write the value after reset.
0	SWRESA	0: — (default) 1: Internal reset enabled (internal reset triggered)

8.4 Software Reset

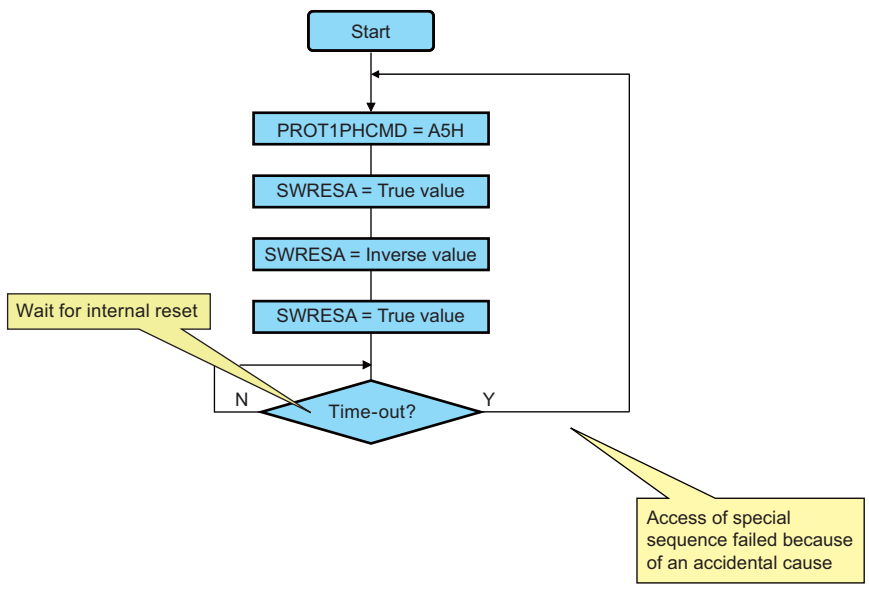

Caution: The timeout period should be 5 μs or longer.

Figure 8.3 Flow of Software Reset

8.5 Usage Notes

The debug function includes a reset masking function. To prevent unexpected operations of this function, fix the $\overline{\text{DCUTRST}}$ pin to the low level when the debug function is not used.

Section 9 Power Supply Circuit

9.1 Features

This product has two variants in terms of power configuration: dual-power supply devices (DPS), where an external source supplies the voltages for the core, and single-power supply devices (eVR), where the on-chip regulator supplies a single voltage for the core. VCC and EVCC should be supplied from the same power source.

Table 9.1 List of Power Supply Pins

Pin Name	Power Supply Voltage in Operation	Uses of Power Supply
Dual-power supply (DPS)		
VCC	See **Section 37, Electrical Specifications**.	POF/LVI, PLL, oscillator, flash programming
VDD		Core power (direct power supply)
EVCC		Port
A0VCC/A1VCC		Power for A/D
A0VREFH/A1VREFH		Reference voltage for A/D
Single-power supply (eVR)		
VCC	See **Section 37, Electrical Specifications**.	POF/LVI, PLL, oscillator, flash programming, on-chip regulator
EVCC		Port
VCL		Capacitance connect pin for the on-chip regulator
A0VCC/A1VCC		Power for A/D
A0VREFH/A1VREFH		Reference voltage for A/D

9.2 Configuration of Power Supply Circuit

Figure 9.1 to Figure 9.4 show configuration of the power supply circuit.

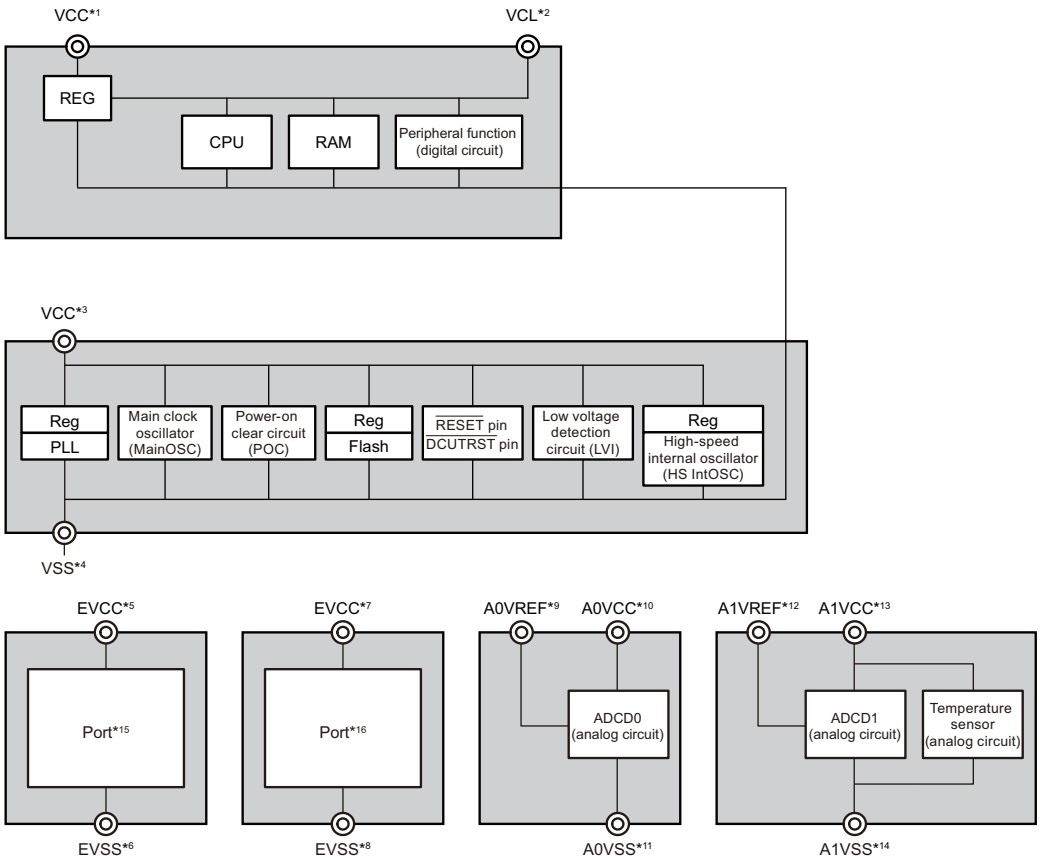

Note 1. Pin number: 19, 142
Note 2. Pin number: 17, 98, 125
Note 3. Pin number: 101
Note 4. Pin number: 18, 97, 124, 143
Note 5. Pin number: 11, 107, 134
Note 6. Pin number: 10, 108, 133
Note 7. Pin number: 60, 84
Note 8. Pin number: 61, 83
Note 9. Pin number: 37
Note 10. Pin number: 39
Note 11. Pin number: 38
Note 12. Pin number: 35
Note 13. Pin number: 34
Note 14. Pin number: 36
Note 15. P1, P2, P3_0 to 10, P3_12 to 14, P4
Note 16. P0, P3_11, P5, JP0_0 to 3, JP0_5

Figure 9.1 Configuration of Power Supply Circuit (Single-Power Supply Device (eVR) 144 pins)

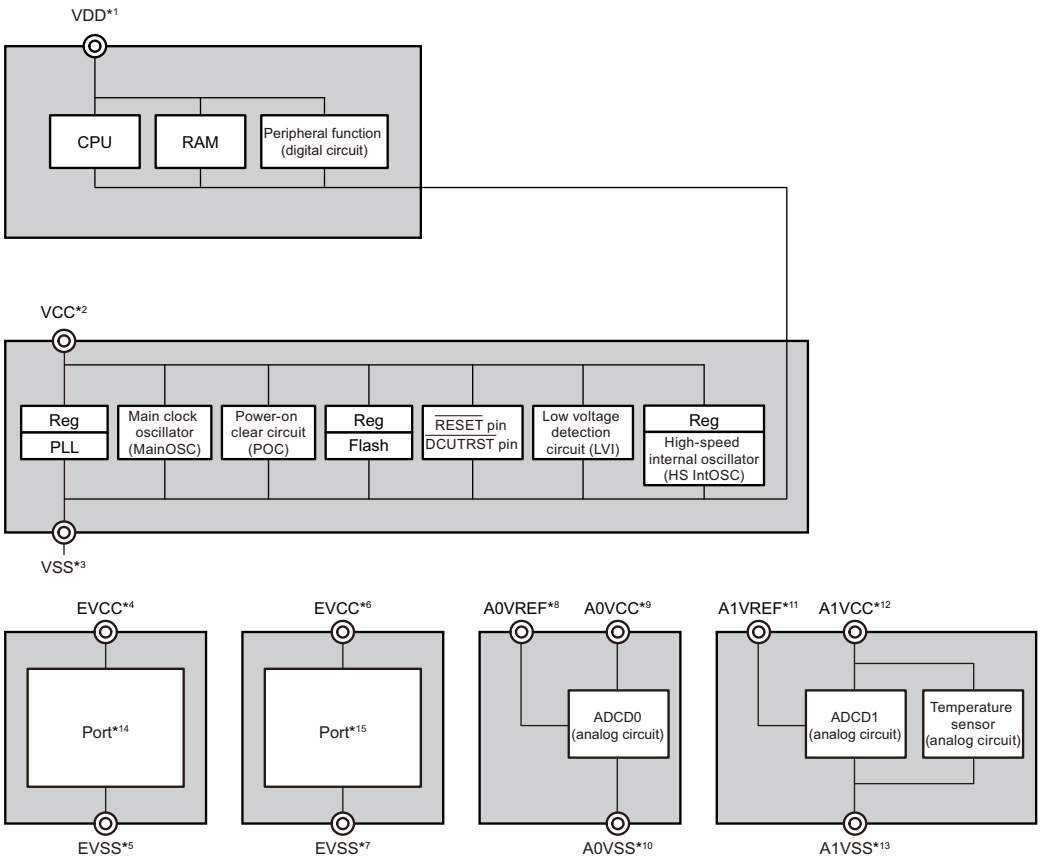

Note 1. Pin number: 17, 98, 125, 142
Note 2. Pin number: 19, 101
Note 3. Pin number: 18, 97, 124, 143
Note 4. Pin number: 11, 107, 134
Note 5. Pin number: 10, 108, 133
Note 6. Pin number: 60, 84
Note 7. Pin number: 61, 83
Note 8. Pin number: 37
Note 9. Pin number: 39
Note 10. Pin number: 38
Note 11. Pin number: 35
Note 12. Pin number: 34
Note 13. Pin number: 36
Note 14. P1, P2, P3_0 to 10, P3_12 to 14, P4
Note 15. P0, P3_11, P5, JP0_0 to 3, JP0_5

Figure 9.2 Configuration of Power Supply Circuit (Dual-Power Supply Device (DPS) 144 pins)

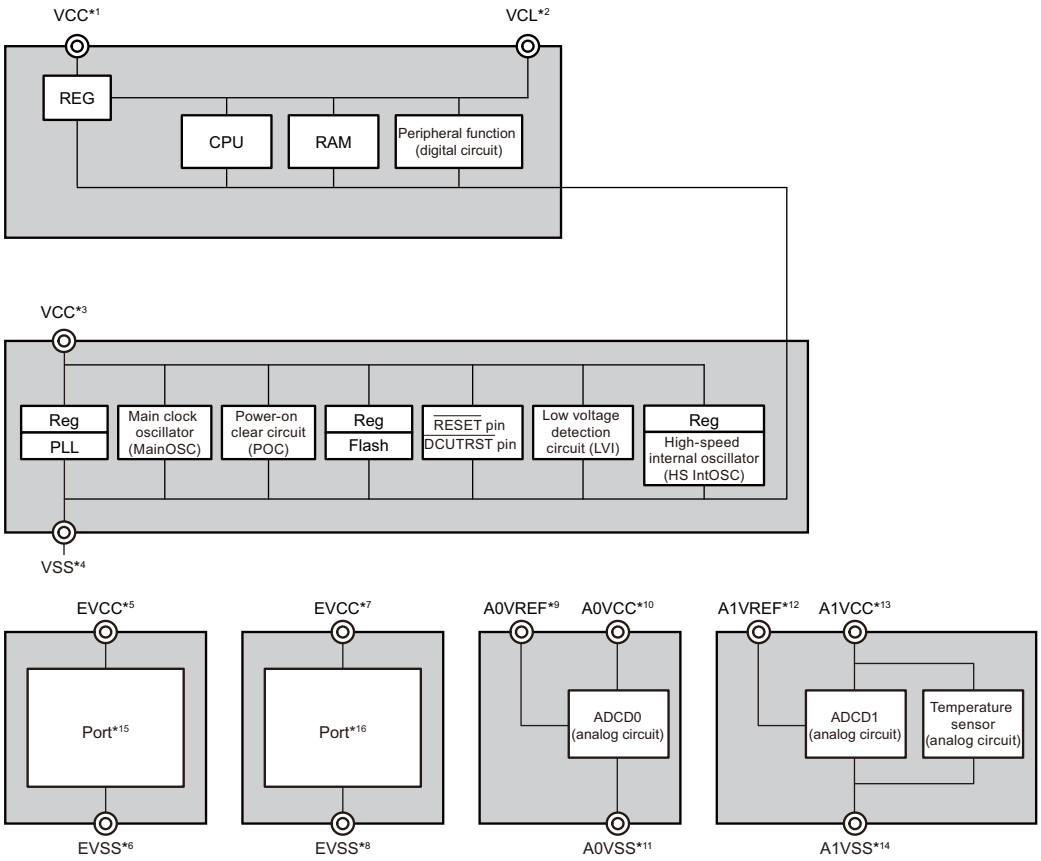

Note 1. Pin number: 98
Note 2. Pin number: 11, 66
Note 3. Pin number: 69
Note 4. Pin number: 12, 65, 99
Note 5. Pin number: 10, 74, 90
Note 6. Pin number: 9, 75, 89
Note 7. Pin number: 55
Note 8. Pin number: 54
Note 9. Pin number: 26
Note 10. Pin number: 28
Note 11. Pin number: 27
Note 12. Pin number: 24
Note 13. Pin number: 23
Note 14. Pin number: 25
Note 15. P1, P2, P3_0 to 10, P3_12 to 14, P4
Note 16. P0, P3_11, P5, JP0_0 to 3, JP0_5

Figure 9.3 Configuration of Power Supply Circuit (Single-Power Supply Device (eVR) 100 pins)

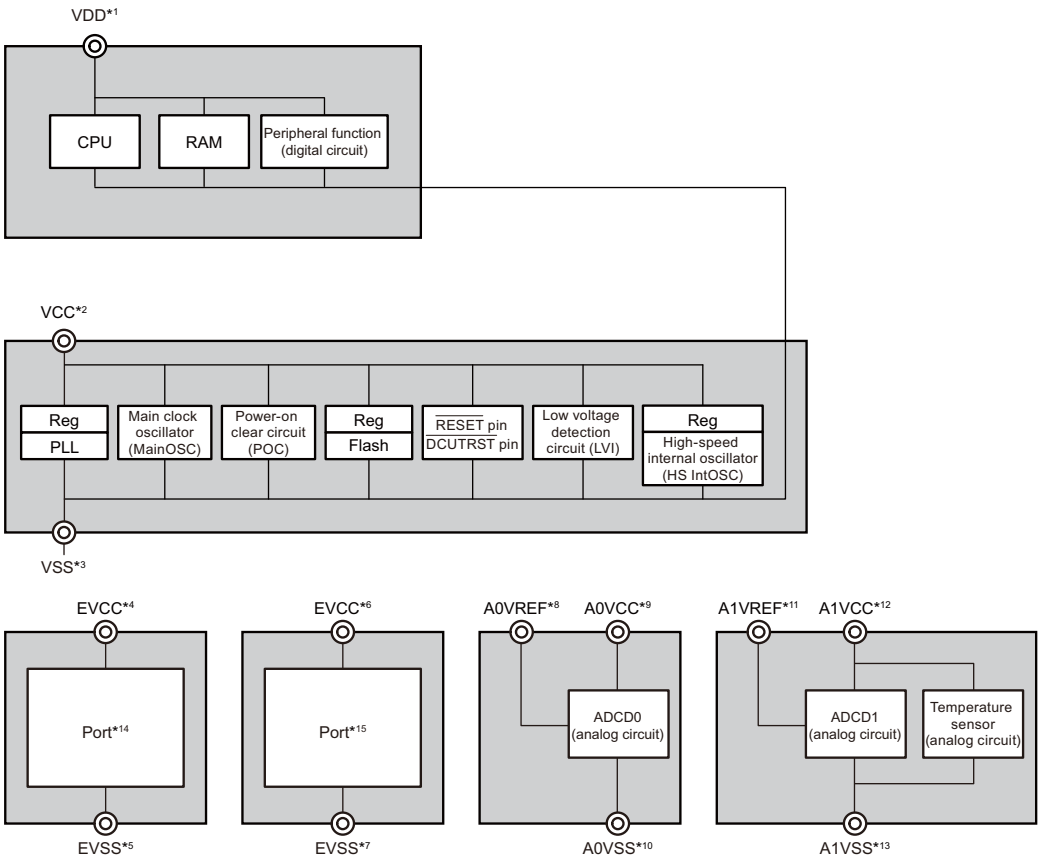

Note 1. Pin number: 11, 66, 98
Note 2. Pin number: 69
Note 3. Pin number: 12, 65, 99
Note 4. Pin number: 10, 74, 90
Note 5. Pin number: 9, 75, 89
Note 6. Pin number: 55
Note 7. Pin number: 54
Note 8. Pin number: 26
Note 9. Pin number: 28
Note 10. Pin number: 27
Note 11. Pin number: 24
Note 12. Pin number: 23
Note 13. Pin number: 25
Note 14. P1, P2, P3_0 to 10, P3_12 to 14, P4
Note 15. P0, P3_11, P5, JP0_0 to 3, JP0_5

Figure 9.4 Configuration of Power Supply Circuit (Dual-Power Supply Device (DPS) 100 pins)

9.3 Example of Connection of Power Management IC

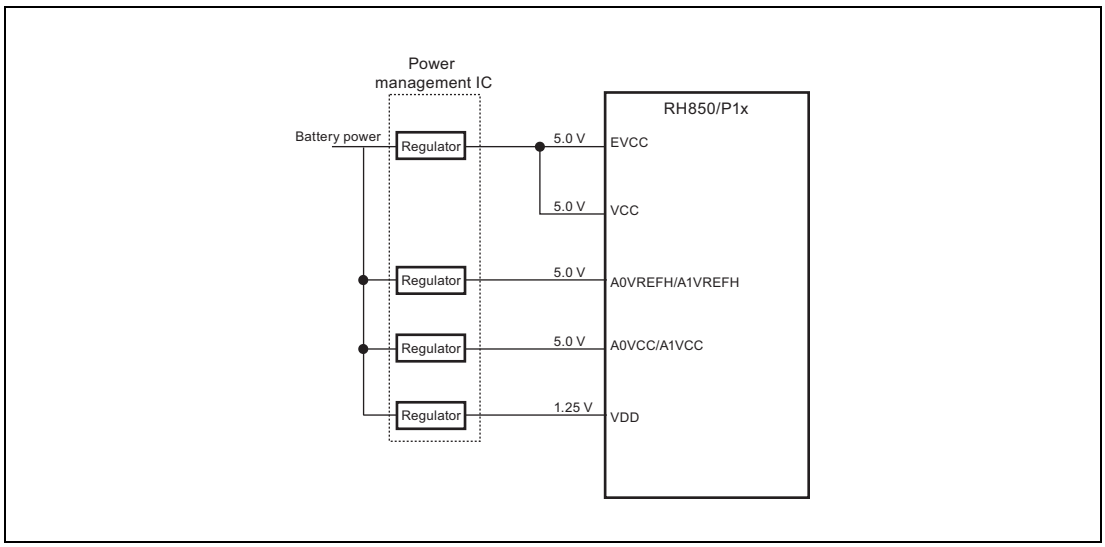

Figure 9.5 Example of Connection of Power Management IC (Dual-Power Supply Device (DPS))

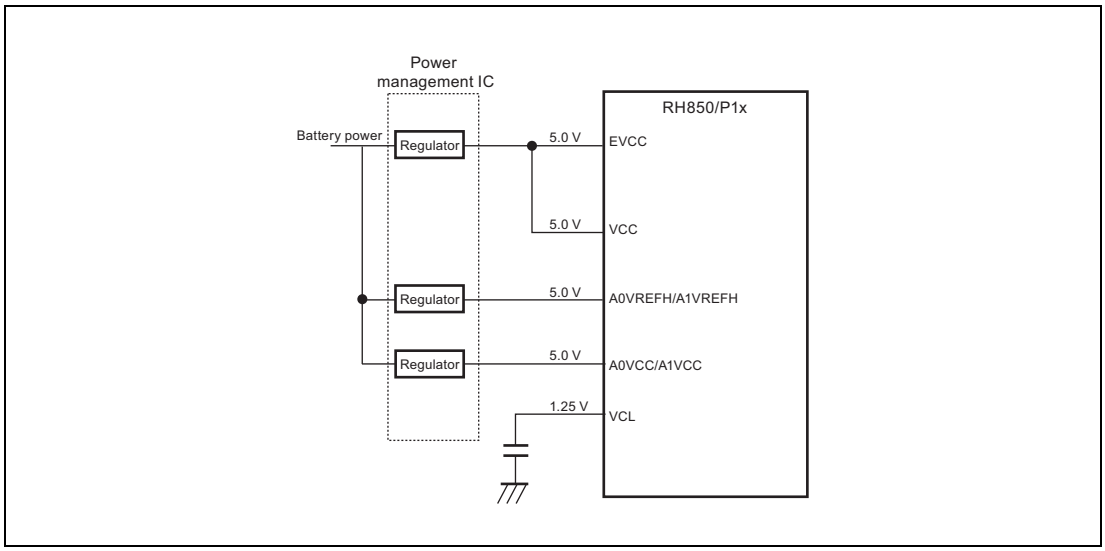

Figure 9.6 Example of Connection of Power Management IC (Single-Power Supply Device (eVR))

9.4 Power-on Sequence

For details, see **Section 37.9.1, Power UP/Down Timing**.

Section 10 Power Supply Voltage Monitor

10.1 Core Voltage Monitor (CVM)

The core voltage monitor (hereinafter referred to as CVM) can detect abnormalities in the core power supply while the microcontroller is working.

CAUTION

Power supply restart should be needed in accordance with Section 37.9.1, Power UP/ Down Timing or enable CVM resets and apply a pin reset on detecting an abnormal voltage in the core while the microcontroller is operating; operation of the core cannot otherwise be guaranteed.

10.1.1 Functions

- The CVM monitors the VDD electric potential supplied to the core logic.
- The CVM operates as follows if the monitored power voltage rises above or lowers below the reference voltage.
  - Able to reset of core voltage operation area by setting of the CVMREN register.
  - Outputs a low level from the $\overline{\text{CVMOUT}}$ pin.
  - Sets flags independently in the CVMF register at events (high voltage detection and low voltage detection)
- Self-diagnosis
  - The CVM can generate a high voltage error and a low voltage error without affecting the core voltage.
  - The CVM self-diagnosis can be conducted by changing the reference voltage.

10.1.2 Block Diagram

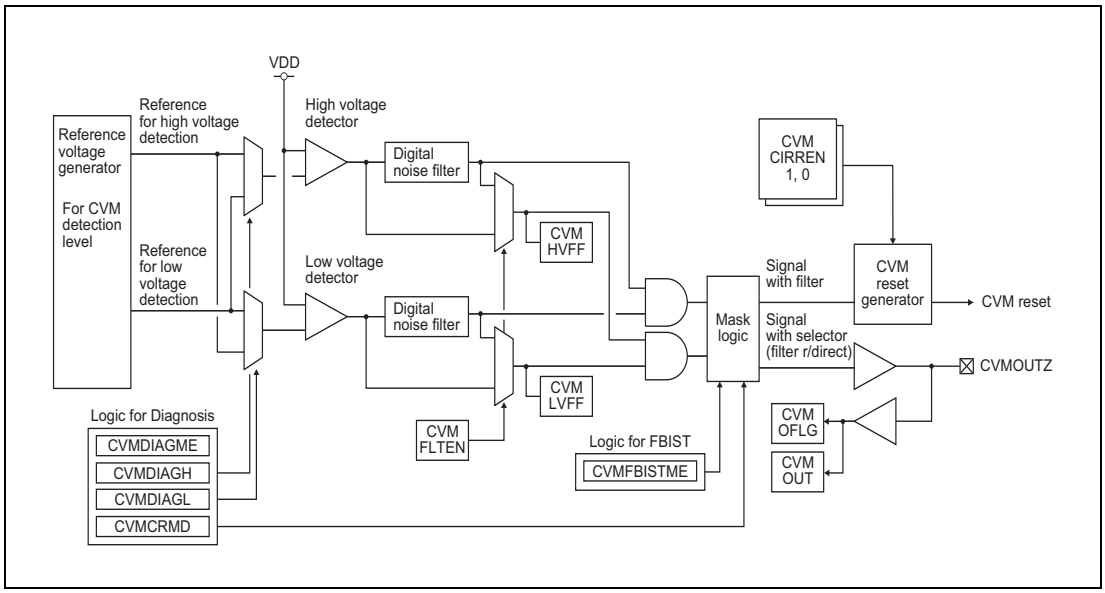

Figure 10.1 CVM Block Diagram

10.1.3 Self-Diagnosis

CVM supports failure injection function. An error is forcibly generated by setting the CVMDIAGL and CVMDIAGH bits of Diagnosis Control Register (CVMDIAG) to 1. The CVM operation is diagnosed by checking an error flag of CVM factor register (CVMF).

In addition, a CVM reset is diagnosed by combing with a software reset when the power is on.

Figure 10.2 shows a diagnosis flow when $\overline{\text{CVMOUT}}$ output is masked in diagnosis mode.

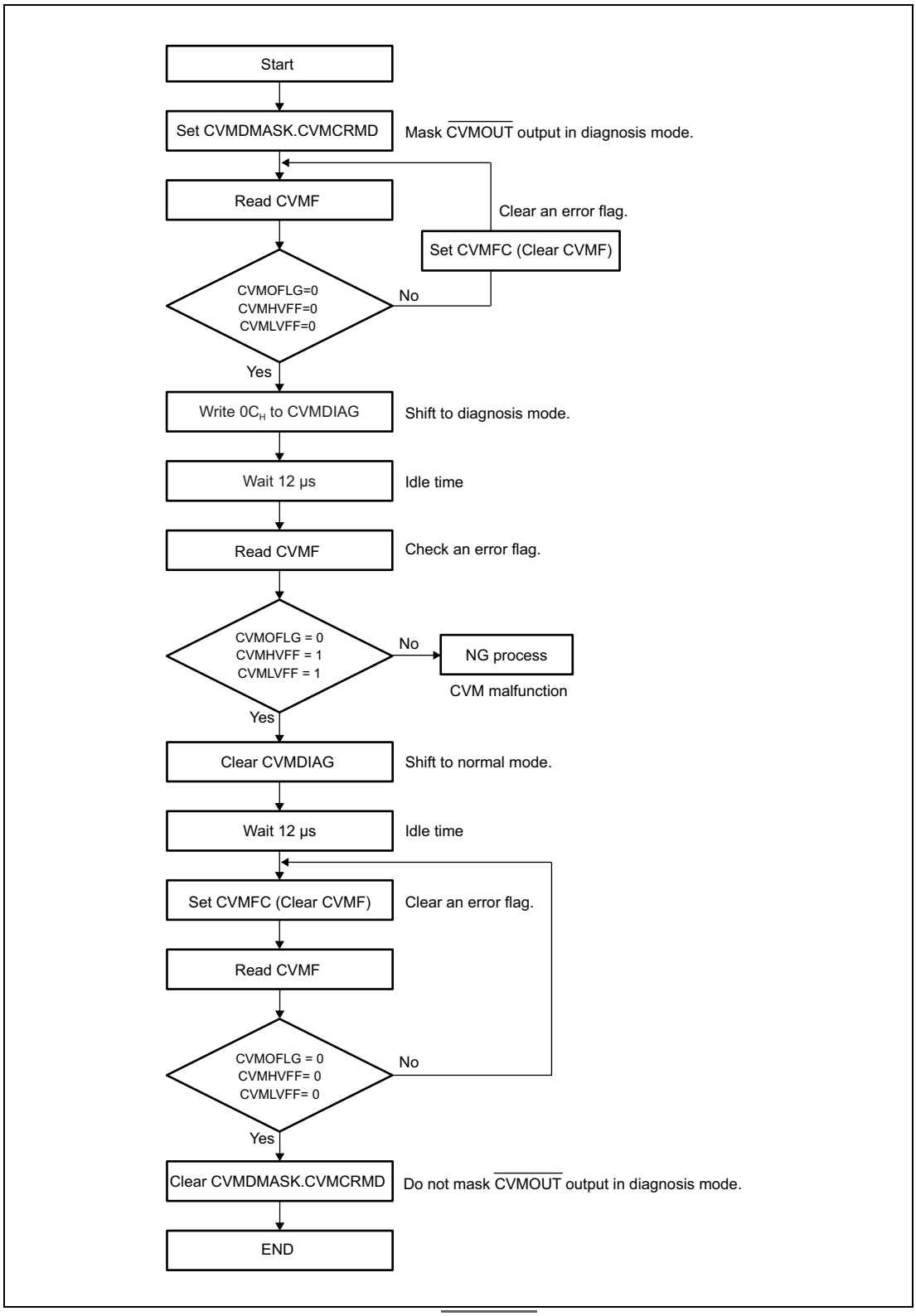

Figure 10.2 Self-diagnosis Flow (when $\overline{\text{CVMOUT}}$ output is masked in diagnosis mode)

Figure 10.3 shows a self-diagnosis flow when $\overline{\text{CVMOUT}}$ output is not masked in diagnosis mode.

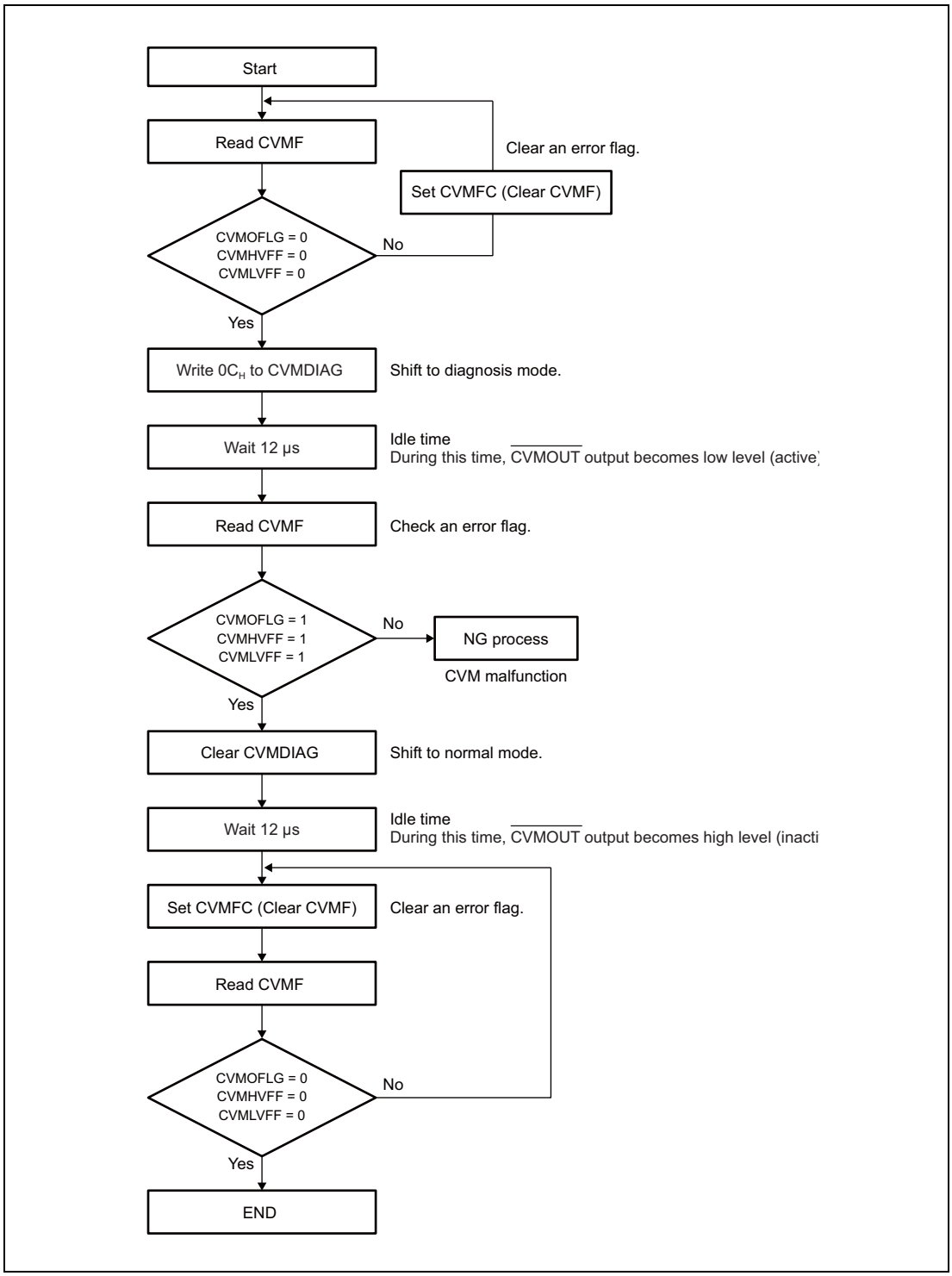

Figure 10.3 Self-diagnosis Flow (when $\overline{\text{CVMOUT}}$ output is not masked in diagnosis mode)

Figure 10.4 shows a self-diagnosis flow when the CVM is reset.

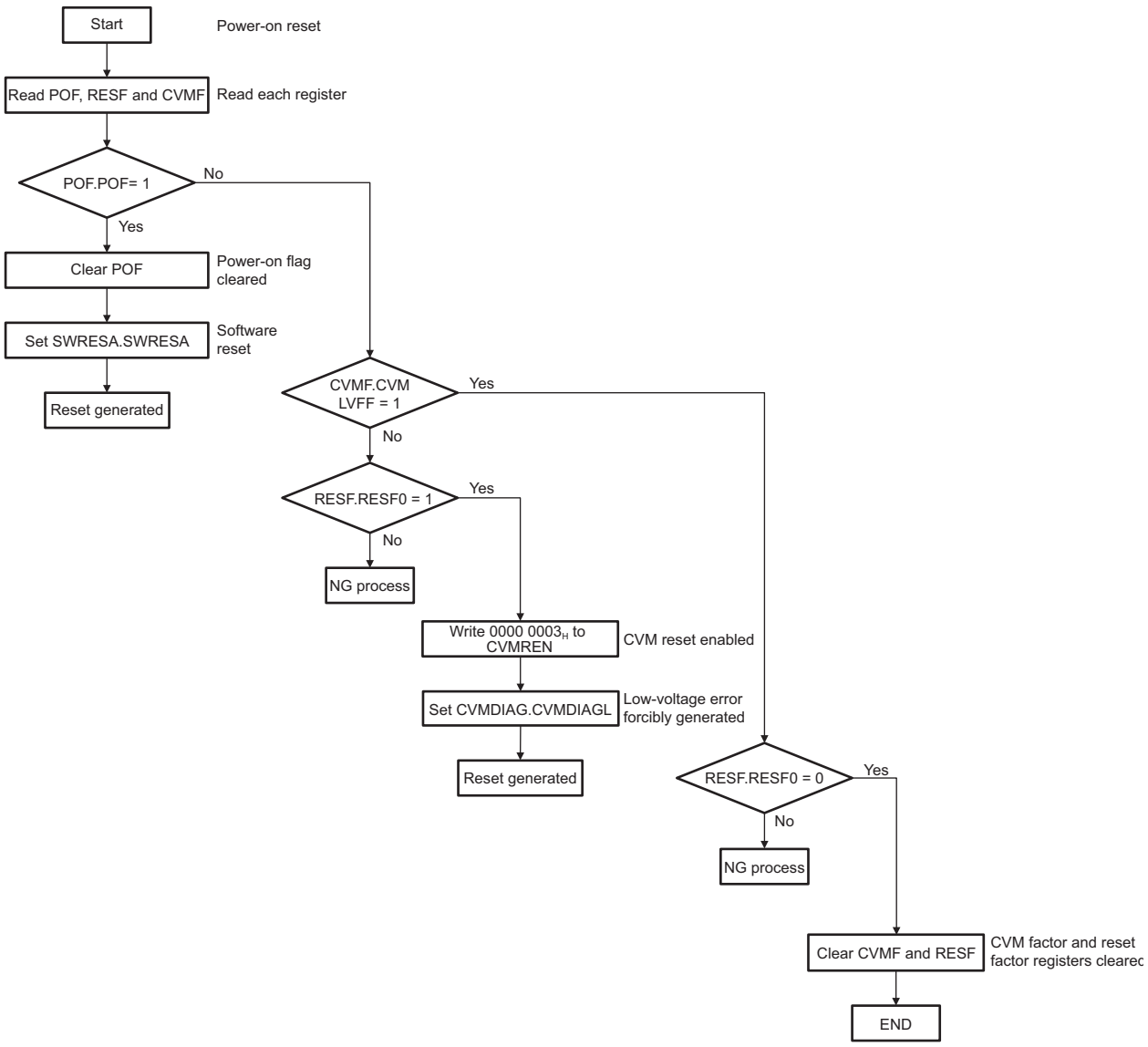

Note 1. In this self-diagnosis flow, a reset is generated in the following order:
(1) Power-on reset
(2) Software reset
(3) CVM reset

Figure 10.4 Self-Diagnosis Flow when the CVM is Reset

10.2 Low-Voltage Detection Circuit (LVI)

The LVI constantly compares the external power voltage VCC with the V_{LVI} reference voltage VLVI.

If VCC lowers below the reference voltage (VCC < V_{LVI}), an error signal ($\overline{LVIRES}$) is sent to the ECM.

10.2.1 LVI Reference Voltage

The LVI reference voltage V_{LVI} can be selected from two levels by setting the LVICNT[1:0] bits in LVICNT.
While the LVICNT[1:0] bits in LVICNT are set to 00_B, the LVI is disabled.
For specifications of the reference voltage level V_{LVI}, see **Section 10.4.10, LVICNT — LVI Control Register**.

10.2.2 LVI Error Signal ($\overline{LVIRES}$)

If VCC lowers below the reference voltage (VCC < V_{LVI}) when setting the LVI detection voltage or resetting LVIRESMK, an error signal $\overline{LVIRES}$ is generated and is sent to the ECM.

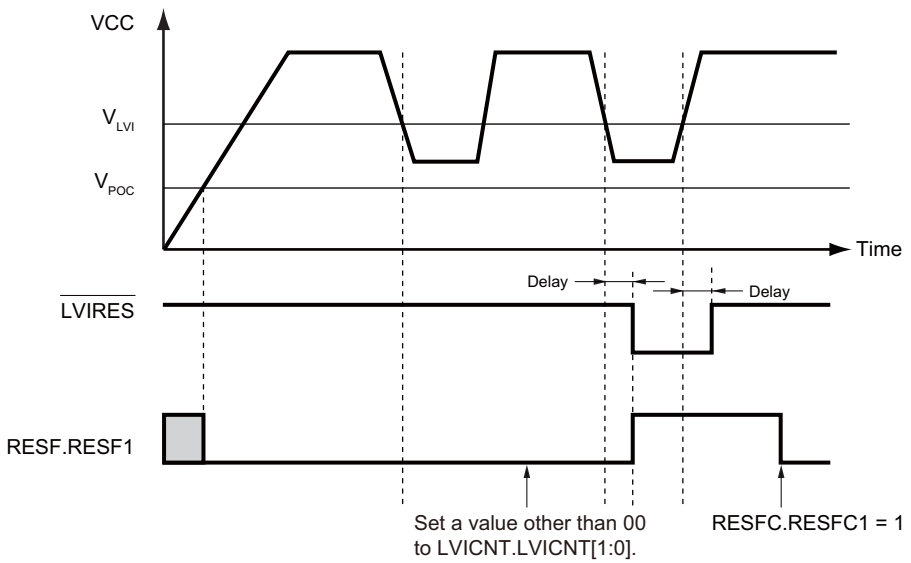

Note: Delay:
A delay time occurs after VCC crosses the VLVI level until $\overline{LVIRES}$ is generated and the RESF.RESF1 bit is set to 1.

Figure 10.5 LVI Error Signal Occurrence Timing

10.2.3 LVI Setting Procedure

Figure 10.6 shows the procedure for setting the LVI.

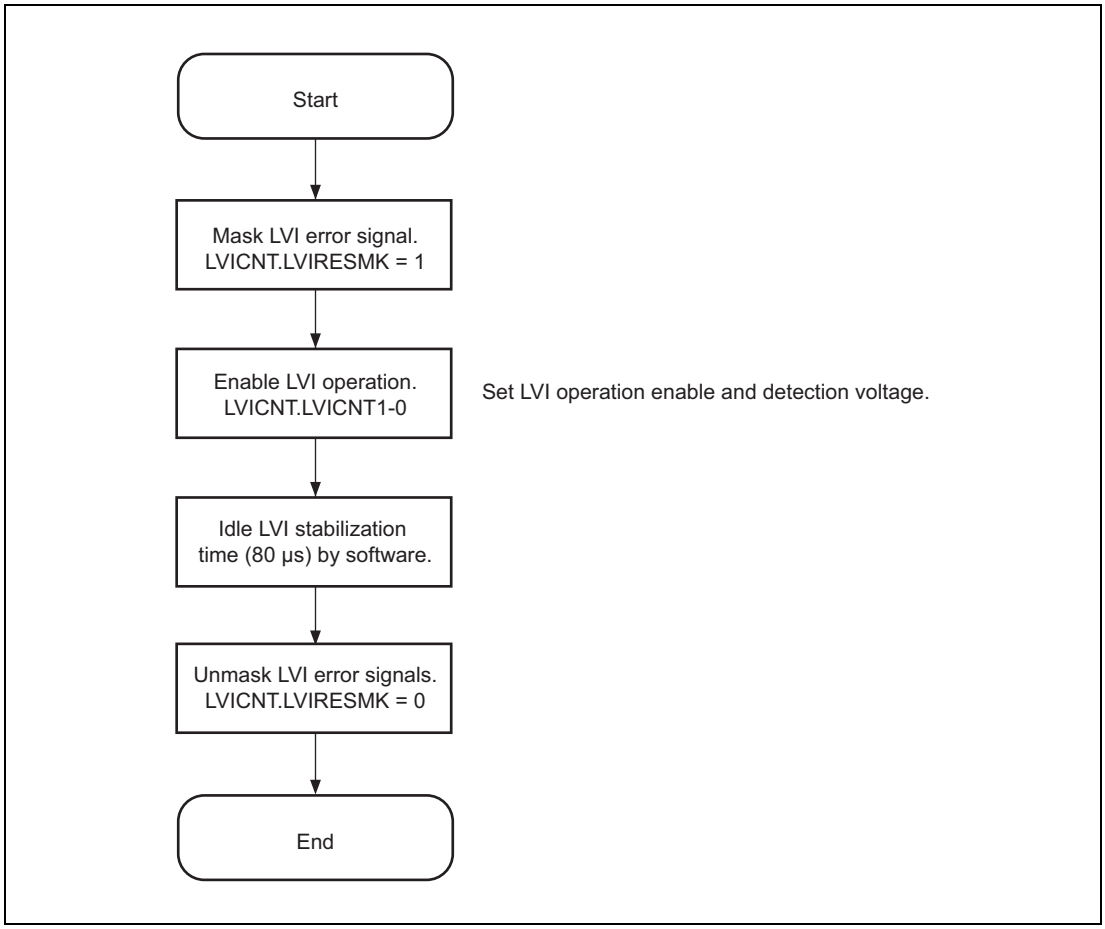

Figure 10.6 LVI Setting Procedure

10.3 Power-on Reset (POCRES)

The power-on clear circuit (POC) always compares the power voltage VCC with the internal reference voltage V_{POC}. This enables the microcontroller to work only while the power voltage is above the specified level.

If VCC lowers below the internal reference voltage (VCC < V_{POC}), a power-on reset signal POCRES and a system reset signal SYSRES are generated.

For details of specifications of the internal reference voltage level V_{POC}, see **Section 37.10, POC Characteristics**.

The power-on clear function retains the reset state of the microcontroller as long as the power voltage does not exceed the threshold level V_{POC}.

The following figure shows the POCRES timing chart.

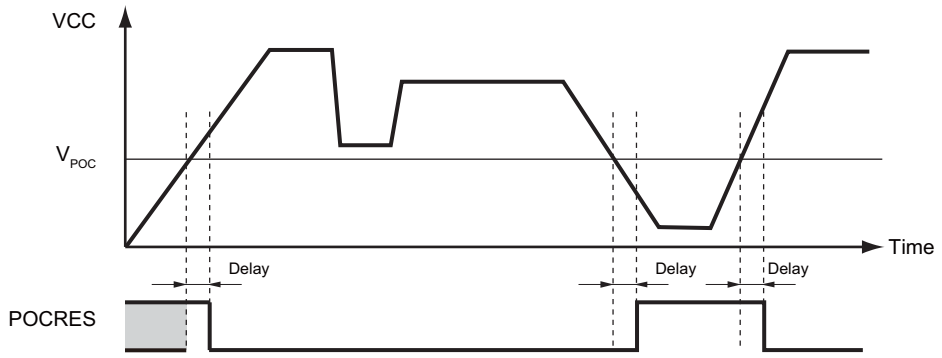

Note: Delay:
A delay time occurs after VCC crosses the V_{POC} level until POCRES is generated or reset.

Figure 10.7 POC Reset Timing

10.4 Registers

10.4.1 List of Registers

Table 10.1 shows the specifications of registers.

Table 10.1 Register Specifications

Register Name	Abbreviation	R/W	Value after Reset	Address	Access Size
Core voltage monitor control registers					
CVM factor register	CVMF	R	00_H	FFF8 2820_H	8
CVM detection enable register	CVMDE	R	03_H	FFF8 2824_H	8
CVM detection output mask register	CVMDMASK	R/W	00_H	FFF8 $282C_H$	8
CVM diagnostic function control register	CVMDIAG	R/W	00_H	FFF8 2830_H	8
CVM monitor register	CVMMON	R	Undefined	FFF8 2834_H	8
CVM factor clear register	CVMFC	W	00_H	FFF8 2838_H	8
CVM detection enable setting register	CVMDEW	W	00_H	FFF8 $283C_H$	8
CVM reset enable register	CVMREN	W	$0000\ 0000_H$	FFF8 2840_H	32
Low-voltage detection reset control registers					
LVI control register	LVICNT	R/W	$0000\ 0000_H$	FFF8 $2C00_H$	32

10.4.2 CVMF — CVM Factor Register

The CVMF register indicates the state of $\overline{\text{CVMOUT}}$ output and the state of the detection of errors by the CVM.

This register is reset by POCRES or DBRES.

Each bit can also be cleared individually by the corresponding bit in the CVMFC register.

Access: This register can only be read in 8-bit units.

Address: FFF8 2820_H

Value after reset: 00_H

Bit	7	6	5	4	3	2	1	0
	CVMOFLG	—	—	—	—	—	CVMHVFF	CVMLVFF
Value after reset	0	0	0	0	0	0	0	0
R/W	R	R	R	R	R	R	R	R

Table 10.2 CVMF Register Contents

Bit Position	Bit Name	Function
7	CVMOFLG	$\overline{\text{CVMOUT}}$ Flag 0: $\overline{\text{CVMOUT}}$ has not occurred. 1: $\overline{\text{CVMOUT}}$ has occurred. This bit indicates the state of $\overline{\text{CVMOUT}}$ output. Once this flag is set to 1, it is retained until it is cleared by the CPU instruction.
6 to 2	Reserved	When read, the value after reset is read.
1	CVMHVFF	High Voltage Detection of Core Voltage by CVM 0: High core voltage violation has not been detected. 1: High core voltage violation has been detected.
0	CVMLVFF	Low Voltage Detection of Core Voltage by CVM 0: Low core voltage violation has not been detected. 1: Low core voltage violation has been detected.

10.4.3 CVMFC — CVM Factor Clear Register

The CVMFC register clears target bits in the CVMF register.

Writing to this register is protected by a special sequence of instructions by using the protection command register PROTCMDCVM.
For details, see **Section 4.3, Write-Protected Registers**.

Access: This register can only be written in 8-bit units.

Address: FFF8 2838_H

Value after reset: 00_H

Bit	7	6	5	4	3	2	1	0
	CVMOFLGC	—	—	—	—	—	CVMHVFFC	CVMLVFFC
Value after reset	0	0	0	0	0	0	0	0
R/W	W	R	R	R	R	R	W	W

Table 10.3 CVMFC Register Contents

Bit Position	Bit Name	Function
7	CVMOFLGC	CVMOFLG Flag Clear 0: Not cleared 1: Cleared
6 to 2	Reserved	When writing, write the value after reset.
1	CVMHVFFC	CVMHVFF Flag Clear 0: Not cleared 1: Cleared
0	CVMLVFFC	CVMLVFF Flag Clear 0: Not cleared 1: Cleared

10.4.4 CVMDE — CVM Detection Enable Register

The CVMDE register indicates the CVM control status by checking the CVM register status in the VCC area.

This register is reset by POCRES or DBRES.

Access: This register can only be read in 8-bit units.

Address: FFF8 2824$_H$

Value after reset: 03$_H$

Bit	7	6	5	4	3	2	1	0
	—	—	—	CVMFBISTME	CVMFLTEN	CVMDIAGME	—	—
Value after reset	0	0	0	0	0	0	1	1
R/W	R	R	R	R	R	R	R	R

Table 10.4 CVMDE Register Contents

Bit Position	Bit Name	Function
7 to 5	Reserved	When read, the value after reset is read.
4	CVMFBISTME	$\overline{\text{CVMOUT}}$ Output Mask (for FBIST Operation) Control 0: $\overline{\text{CVMOUT}}$ output during FBIST and CVMRES are masked. 1: $\overline{\text{CVMOUT}}$ output during FBIST and CVMRES are not masked. **CAUTION** This bit setting is valid only for the FBIST that started up from a pin reset. $\overline{\text{CVMOUT}}$ output and CVMRES are not masked if the FBIST is started by an ECM reset, regardless of the setting of this bit.
3	CVMFLTEN	$\overline{\text{CVMOUT}}$ Output Filter Control 0: Output filter of $\overline{\text{CVMOUT}}$ is enabled. 1: Output filter of $\overline{\text{CVMOUT}}$ is disabled.
2	CVMDIAGME	CMV Diagnosis Control 0: CVM diagnosis is enabled. 1: CVM diagnosis is disabled.
1, 0	Reserved	When read, the value after reset is read.

10.4.5 CVMDEW — CVM Detection Enable Setting Register

The CVMDEW register can modify the values of bits 2 to 4 in the CVMDE register. This register can be set only once after a power-on reset is cancelled. (Subsequent writing is ignored.)

Writing to this register is protected by a special sequence of instructions by using the protection command register PROTCMDCVM.
For details, see **Section 4.3, Write-Protected Registers**.

Access: This register can only be written in 8-bit units.

Address: FFF8 283C_H

Value after reset: 00_H This register is always read as 00_H.

Bit	7	6	5	4	3	2	1	0
	—	—	—	CVMFLTENW	CVMDIAGMEW	CVMFBISTMEW	—	—
Value after reset	0	0	0	0	0	0	0	0
R/W	R	R	R	W	W	W	R	R

Table 10.5 CVMDEW Register Contents

Bit Position	Bit Name	Function
7 to 5	Reserved	When writing, write the value after reset.
4	CVMFLTENW	$\overline{\text{CVMOUT}}$ Output Filter Control 0: CVMDE.CVMFLTEN = 0 (Output filter of $\overline{\text{CVMOUT}}$ is enabled.) 1: CVMDE.CVMFLTEN = 1 (Output filter of $\overline{\text{CVMOUT}}$ is disabled.)
3	CVMDIAGMEW	CVM Diagnosis Enable 0: CVMDE.CVMDIAGME = 0 (CVM diagnosis is enabled.) 1: CVMDE.CVMDIAGME = 1 (CVM diagnosis is disabled.)
2	CVMFBISTMEW	$\overline{\text{CVMOUT}}$ Out Mask (for FBIST Operation) Control 0: CVMDE.CVMFBISTME = 0 ($\overline{\text{CVMOUT}}$ output during FBIST and CVMRES are masked.) 1: CVMDE.CVMFBISTME = 1 ($\overline{\text{CVMOUT}}$ output during FBIST and CVMRES are not masked.) **CAUTION** The setting of this bit is only effective for the FBIST when it has started up from a pin reset. $\overline{\text{CVMOUT}}$ output and CVMRES are not masked if the FBIST is started up by an ECM reset, regardless of the setting of this bit.
1, 0	Reserved	When writing, write the value after reset.

10.4.6 CVMDMASK — CVM Detection Output Mask Register

The CVMDMASK register masks $\overline{\text{CVMOUT}}$ output in diagnosis mode. (This register is enabled only in diagnosis mode.)

Writing to this register is protected by a special sequence of instructions by using the protection command register PROTCMDCVM.
For details, see **Section 4.3, Write-Protected Registers**.

This register is initialized by any reset source (SYSRES).

Access: This register can be read/written in 8-bit units.

Address: FFF8 282C$_H$

Value after reset: 00$_H$

Bit	7	6	5	4	3	2	1	0
	—	—	—	—	—	—	—	CVMCRMD
Value after reset	0	0	0	0	0	0	0	0
R/W	R	R	R	R	R	R	R	R/W

Table 10.6 CVMDMASK Register Contents

Bit Position	Bit Name	Function
7 to 1	Reserved	When read, the value after reset is read. When writing, write the value after reset.
0	CVMCRMD	$\overline{\text{CVMOUT}}$ Output Mask in Diagnosis Mode 0: $\overline{\text{CVMOUT}}$ output and CVMRES are not masked in diagnosis mode. 1: $\overline{\text{CVMOUT}}$ output and CVMRES are masked in diagnostic mode. ($\overline{\text{CVMOUT}}$ output = high level)

Note: CVM detection output mask register (CVMDASK) is enabled only when the bit CVMDIAGMEW of CVM detection enable set register (CVMDEW) is set to “0”.

10.4.7 CVMDIAG — CVM Diagnostic Function Control Register

The CVMDIAG register is used to control diagnosis mode of the CVM circuit.

Writing to this register is protected by a special sequence of instructions by using the protection command register PROTCMDCVM.
For details, see **Section 4.3, Write-Protected Registers**.

This register is initialized by any reset source (SYSRES).

Access: This register can be read/written in 8-bit units.

Address: FFF8 2830_H

Value after reset: 00_H

Bit	7	6	5	4	3	2	1	0
	—	—	—	—	CVMDIAGH	CVMDIAGL	—	—
Value after reset	0	0	0	0	0	0	0	0
R/W	R	R	R	R	R/W	R/W	R/W	R/W

Table 10.7 CVMDIAG Register Contents

Bit Position	Bit Name	Function
7 to 4	Reserved	When read, the value after reset is read. When writing, write the value after reset.
3	CVMDIAGH	Diagnosis mode control 0: Normal mode 1: Diagnosis mode: High core voltage error is forcibly generated.
2	CVMDIAGL	Diagnosis mode control 0: Normal mode 1: Diagnosis mode: Low core voltage error is forcibly generated.
1, 0	Reserved	When read, the value after reset is read. When writing, write the value after reset.

10.4.8 CVMMON — CVM Monitor Register

The CVMMON register indicates the state of $\overline{\text{CVMOUT}}$ output. This register is available for diagnosis mode.

Access: This register can only be read in 8-bit units.

Address: FFF8 2834_H

Value after reset: Undefined. Bit 0 indicates the state of $\overline{\text{CVMOUT}}$ output.)

Bit	7	6	5	4	3	2	1	0
	—	—	—	—	—	—	—	CVMOUT
Value after reset	0	0	0	0	0	0	0	—
R/W	R	R	R	R	R	R	R	R

Table 10.8 CVMMON Register Contents

Bit Position	Bit Name	Function
7 to 1	Reserved	When read, the value after reset is read.
0	CVMOUT	$\overline{\text{CVMOUT}}$ Output Level 0: Low level (active) 1: High level (inactive)

10.4.9 CVMREN— CVM Reset Enable Register

This register enables or disables a reset of core voltage operation area upon detection of abnormal in core power supply. This register can be set only once after a power-on reset is cancelled. (Subsequent writing is ignored.)

Writing to this register is protected by a special sequence of instructions by using the protection command register PROTCMDCVM.
For details, see **Section 4.3, Write-Protected Registers**.

The setting of this register is reset by POCRES or DBRES.

Access: This register can only be written in 32-bit units.

Address: FFF8 2840_H

Value after reset: 0000 0000_H

Bit	31	30	29	28	27	26	25	24	23	22	21	20	19	18	17	16
	—	—	—	—	—	—	—	—	—	—	—	—	—	—	—	—
Value after reset	0	0	0	0	0	0	0	0	0	0	0	0	0	0	0	0
R/W	R	R	R	R	R	R	R	R	R	R	R	R	R	R	R	R

Bit	15	14	13	12	11	10	9	8	7	6	5	4	3	2	1	0
	—	—	—	—	—	—	—	—	—	—	—	—	—	—	CVMCIRREN [1:0]	
Value after reset	0	0	0	0	0	0	0	0	0	0	0	0	0	0	0	0
R/W	R	R	R	R	R	R	R	R	R	R	R	R	R	R	W	W

Table 10.9 CVMREN Register Contents

Bit Position	Bit Name	Function
31 to 2	Reserved	When read, the value after reset is read. When writing, write the value after reset.
1, 0	CVMCIRREN [1:0]	Enable or disable CVM resets. 11B: Reset is enabled. Other than the above: Reset is disabled.

NOTE

A CVM reset is triggered by the CMVM output signal through filter.

10.4.10 LVICNT — LVI Control Register

This register is used to control low voltage detection and select LVI detection level.

Writing to this register is protected by a special sequence of instructions by using the protection command register PROT1PHCMD.
For details, see **Section 4.3, Write-Protected Registers**.

This register is reset by any reset source (SYSRES).

Access: This register can be read/written in 32-bit units.

Address: FFF8 2C00$_H$

Value after reset: 0000 0000$_H$

Bit	31	30	29	28	27	26	25	24	23	22	21	20	19	18	17	16
	—	—	—	—	—	—	—	—	—	—	—	—	—	—	—	—
Value after reset	0	0	0	0	0	0	0	0	0	0	0	0	0	0	0	0
R/W	R	R	R	R	R	R	R	R	R	R	R	R	R	R	R	R

Bit	15	14	13	12	11	10	9	8	7	6	5	4	3	2	1	0
	—	—	—	—	—	—	—	—	—	—	—	—	—	LVIRESMK	LVICNT[1:0]	
Value after reset	0	0	0	0	0	0	0	0	0	0	0	0	0	0	0	0
R/W	R	R	R	R	R	R	R	R	R	R	R	R	R	R/W	R/W	R/W

Table 10.10 LVICNT Register Contents

Bit Position	Bit Name	Function
31 to 3	Reserved	When read, the value after reset is read. When writing, write the value after reset.
2	LVIRESMK	LVI Error Mask 0: LVI error is not masked. 1: LVI error is masked.
1, 0	LVICNT[1:0]	Detection Level 0 0: LVI is not active. 0 1: 4.5 V 1 0: Setting prohibited 1 1: 3.1 V

Section 11 Temperature Sensor

This chapter describes temperature sensor (TSN0). The first section covers the original features of RH850/P1x of the sensor such as number of units, register base addresses. Latter sections covers the function of TSN0 and registers.

11.1 Overview of RH850/P1x Temperature Sensor

11.1.1 Units

This product is provided with a temperature sensor with the following number of units.

Table 11.1 Units

Temperature Sensor	
Number of units	1
Name	TSN0

11.1.2 Register Base Address

TSN0 register base addresses are listed in the following table.

The register addresses of the TSN0 are given as offsets from the base addresses.

Table 11.2 Register Base Address

Base address Name	Base Address
TNS0_base	FFF2 8000_H

11.1.3 Clock Supply

Clock supply by and to a temperature sensor is listed in the following table.

Table 11.3 Clock Supply

Unit Name	Clock Name for the Unit	Supply Clock Name
TSN0	PCLK	Low-speed peripheral clock CLK_LSB

11.1.4 Reset Sources

The registers that constitute the temperature sensor are initialized by the reset sources listed below.

Table 11.4 TSN0 Reset Sources

Channel	Reset Source
TSN0	• Reset controller SYSRES

11.2 Overview

11.2.1 Functional Overview

TSN0 has the following functions and features.

- Temperature measurement
  TSN0 measures temperature by using analog channel 12 (AN112) of A/D converter unit 1 (ADCD1).
  Temperature measurement time (CLK_ADC = 40 MHz): 4 µs (A/D conversion time of 1 µs × 4 times)
  Temperature measurement time (CLK_ADC = 20 MHz): 45.2 µs (A/D conversion time of 11.3 µs × 4 times)
  Stabilization time: 200 µs
- Error notification
  A temperature error signal is sent to the ECM module when the temperature reaches an upper or lower limit.
- Temperature measurement modes
  One-shot: A/D conversion is executed four times consecutively.
  Continuous: Four consecutive virtual channels are set for the temperature sensor and the corresponding scan group 4 is placed in multi-cycle scan mode.
- Self-diagnosis
  Self-diagnosis through the insertion of high-temperature errors is supported.

11.2.2 Block Diagram

Figure 11.1 shows the block diagram of temperature sensor.

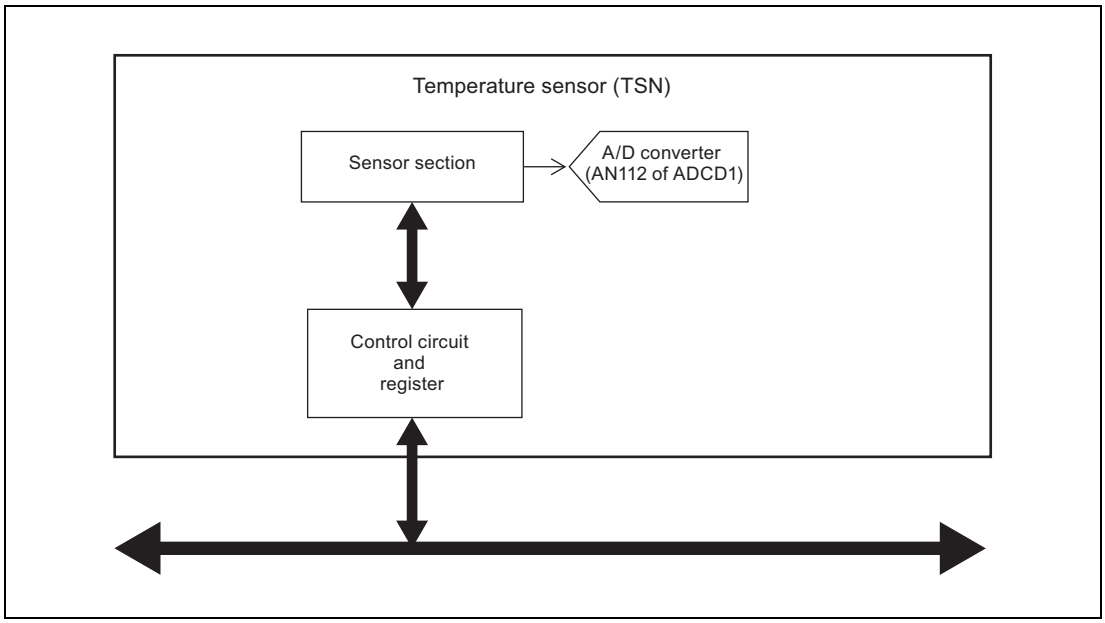

Figure 11.1 Block Diagram of Temperature Sensor

11.3 Register

11.3.1 Register List

The following table lists the registers.

For details about <TSN0_base>, see **Section 11.1.2, Register Base Address**.

Register Name	Symbol Name	R/W	Initial Value	Address
Temperature sensor control register	TSN0CR	R/W	$0000\ 0000_H$	<TSNn_base> + 000_H
Temperature sensor status register	TSN0STAT	R	$0000\ 0000_H$	<TSNn_base> + 004_H
Temperature sensor diagnosis control register	TSN0DIAG	R/W	$0000\ 0000_H$	<TSNn_base> + 008_H
Temperature sensor reference storage register	TSNREFD	R	Undefined*1	$FFCD\ 019C_H$

Note 1. The fixed value is set at the time of shipping.

11.3.2 TSN0CR — Temperature Sensor Control Register

This register controls the temperature sensor. This register is set up when the A/D converter is stopped.

Access: This register can be read or written in 32-bit units.

Address: <TSNn_base> + 000_H

Value after reset: $0000\ 0000_H$

Bit	31	30	29	28	27	26	25	24	23	22	21	20	19	18	17	16
	—	—	—	—	—	—	—	—	—	—	—	—	—	—	—	—
Value after reset	0	0	0	0	0	0	0	0	0	0	0	0	0	0	0	0
R/W	R	R	R	R	R	R	R	R	R	R	R	R	R	R	R	R

Bit	15	14	13	12	11	10	9	8	7	6	5	4	3	2	1	0
	—	—	—	—	—	—	—	—	—	—	—	—	—	—	—	TSNEN
Value after reset	0	0	0	0	0	0	0	0	0	0	0	0	0	0	0	0
R/W	R	R	R	R	R	R	R	R	R	R	R	R	R	R	R	R/W

Table 11.5 TSN0CR Register Contents

Bit Position	Bit Name	Function
31 to 1	Reserved	When read, the value after reset is returned. When writing, write the value after reset.
0	TSNEN	This bit controls the temperature sensor 0: The temperature sensor is disabled. 1: The temperature sensor is enabled.

11.3.3 TSN0STAT — Temperature Sensor Status Register

This register indicates the status of the temperature sensor.

Access: This register can only be read in 32-bit units.

Address: <TSNn_base> + 004_H

Value after reset: $0000\ 0000_H$

Bit	31	30	29	28	27	26	25	24	23	22	21	20	19	18	17	16
	—	—	—	—	—	—	—	—	—	—	—	—	—	—	—	—
Value after reset	0	0	0	0	0	0	0	0	0	0	0	0	0	0	0	0
R/W	R	R	R	R	R	R	R	R	R	R	R	R	R	R	R	R

Bit	15	14	13	12	11	10	9	8	7	6	5	4	3	2	1	0
	—	—	—	—	—	—	—	—	—	—	—	—	—	—	—	TSNST
Value after reset	0	0	0	0	0	0	0	0	0	0	0	0	0	0	0	0
R/W	R	R	R	R	R	R	R	R	R	R	R	R	R	R	R	R

Table 11.6 TSN0STAT Register Contents

Bit Position	Bit Name	Function
31 to 1	Reserved	When read, the value after reset is returned.
0	TSNST	This bit indicates the status of the temperature sensor 0: The temperature sensor is disabled. (Temperature sensor stabilization time 200 μs is not elapsed.) 1: The temperature sensor is enabled. (Temperature sensor stabilization time 200 μs is elapsed.)

11.3.4 TSN0DIAG — Temperature Sensor Diagnosis Control Register

This register controls self-diagnosis of the temperature sensor. It can be set when the A/D converter is stopped.

Access: This register can be read or written in 32-bit units.

Address: <TSNn_base> + 008_H

Value after reset: $0000\ 0000_H$

Bit	31	30	29	28	27	26	25	24	23	22	21	20	19	18	17	16
	—	—	—	—	—	—	—	—	—	—	—	—	—	—	—	—
Value after reset	0	0	0	0	0	0	0	0	0	0	0	0	0	0	0	0
R/W	R	R	R	R	R	R	R	R	R	R	R	R	R	R	R	R

Bit	15	14	13	12	11	10	9	8	7	6	5	4	3	2	1	0
	—	—	—	—	—	—	—	—	—	—	—	—	—	—	—	TSN SELF DIAG
Value after reset	0	0	0	0	0	0	0	0	0	0	0	0	0	0	0	0
R/W	R	R	R	R	R	R	R	R	R	R	R	R	R	R	R	R/W

Table 11.7 TSN0DIAG Register Contents

Bit Position	Bit Name	Function
31 to 1	Reserved	When read, the value after reset is returned. When writing, write the value after reset.
0	TSNSELFDIAG	This bit controls self-diagnosis of the temperature sensor. 0: The temperature sensor self-diagnosis is disabled. 1: The temperature sensor self-diagnosis is enabled.

11.3.5 TSNREFD — Temperature Sensor Reference Temperature Storage Register

In this register, the measured value at the time of shipping is stored.

The reference temperature (at A1VREFH = 5.0 V, Tj = 150°C) is stored in TSNREFDH and the reference temperature (at A1VREFH = 5.0 V, Tj = 25°C) is stored in TSNREFDL.

Access: This register can be read in 32-bit units.

Address: FFCD $019C_H$

Value after reset: Undefined: (The fixed value is set at the time of shipping.)

Bit	31	30	29	28	27	26	25	24	23	22	21	20	19	18	17	16
	—	—	—	—	TSNREFDH[11:0]											
Value after reset	0	0	0	0	—	—	—	—	—	—	—	—	—	—	—	—
R/W	R	R	R	R	R	R	R	R	R	R	R	R	R	R	R	R

Bit	15	14	13	12	11	10	9	8	7	6	5	4	3	2	1	0
	—	—	—	—	TSNREFDL[11:0]											
Value after reset	0	0	0	0	—	—	—	—	—	—	—	—	—	—	—	—
R/W	R	R	R	R	R	R	R	R	R	R	R	R	R	R	R	R

Table 11.8 TSNREFD Register Contents

Bit Position	Bit Name	Function
31 to 28	Reserved	When read, the value after reset is returned.
27 to 16	TSNREFDH[11:0]	The value of the reference temperature measured at Tj = 150°C
15 to 12	Reserved	When read, the value after reset is returned.
11 to 0	TSNREFDL[11:0]	The value of the reference temperature measured at Tj = 25°C

11.4 Functions

11.4.1 Temperature Measurement

TSN0 measures temperatures by using the AN112 channel of ADCD1. The AN112 channel is set for scan group 4 of the ADCD1 and four consecutive virtual channels must be set for AD conversion of the signal from the temperature sensor.

Refer to **Figure 11.2** for an example. The result of measurement is stored in the data register corresponding to the fourth virtual channel.

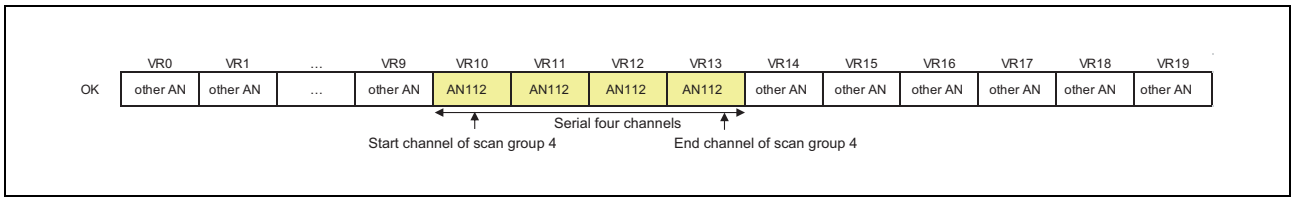

Figure 11.2 Examples of Settings for Temperature-Sensor-Dedicated Use of Conversion Channel AN112 of ADCD1

Set TSN0 up for measuring the temperature by making the register settings in the procedure below.

1. Set the TSN0-dedicated AD conversion channel AN112 in four consecutive virtual channels of scan group 4.
2. Enable the temperature sensor by setting the TSNEN bit of the TSNCR register to “1”. This step can precede step 1 above.
3. Wait for TSN0 to start up. After setting the TSNEN bit of the TSNCR register to “1”, wait for 200 us before proceeding with the next step (step 4). This is the waiting time required for the temperature sensor to start up. Do not proceed with the next step until this time has elapsed. The user can confirm that the sensor has started up by checking the TSNST bit of the TSNSTAT register.
4. TSN0 starts measuring temperature and a software or hardware trigger starts AD conversion by scan group 4 of the ADCD1.
5. Check the result of measurement. The measurement of temperature is completed when AD conversion of the fourth virtual channel is completed. The result of measuring the signal from the temperature sensor is stored in the data register corresponding to the fourth virtual channel. For conversion of the result to degrees Celsius, refer to **Section 11.5, Calculating the Temperature**.
6. When abnormal temperature notification by the temperature sensor is to be used, the upper and lower limit error bits for ADCD1 must be cleared. Since discharging proceeds in the first A/D conversion of temperature measurement, when this function is used, the ADCD1ULER upper/lower limit error register is set as if a lower-limit error has occurred. The upper/lower limit error bits of the ADCD1 must thus be cleared after temperature measurement.

CAUTION

When AN112 inputs a hold trigger of T&H group A or B during conversion, the virtual channel operation is suspended so that correct temperature measurement result cannot be obtained. Do not input a hold trigger of T&H group A or B during temperature measurement.

11.4.2 Error Notification

- TCN0 can use the ADCD1 upper-and-lower limit checking function to send a limit error signal to the ECM module when the temperature exceeds the specified upper or lower limit.
- The following settings are required to use error notification.
  1. Set the upper and lower limits of the temperature in the ADCD1ULLMTBR0 to 2 registers of ADCD1.
  2. Select the upper and lower limits table for scan group 4 in the ADCD1ULLMSR4 register.
  3. Set the ULIEI bit of the ADCD1SFTCR safety control register to “1” to enable upper/lower limit error interrupts. Set the OWEIE, PEIE, and IDEIE bits to “0” to disable overwrite error interrupts, parity error interrupts, and ID error interrupts. Disable the ADCD1 error interrupt (INTADCD1ERR) of the interrupt controller (INTC).

11.4.3 Self-Diagnosis

TSN0 supports the insertion of faulty values. Setting the TSNSELFDIAG bit of the TSN0DIAG register to “1” forces the TSN0 module to generate an error. TSN0 can then diagnose its own operation by comparing the change with the expected value (0) from the AN112 channel of ADCD1.

TSN0 is set up for self-diagnosis by the following register settings.

1. Set up AD conversion by the temperature sensor channel. The settings are the same as for normal operation. Refer to **Section 11.4.1, Temperature Measurement**.
2. Enable the temperature sensor. The setting is the same as for normal operation. Refer to **Section 11.4.1, Temperature Measurement**.
3. Set the self-diagnosis register before starting AD conversion. That is, set the TSNSELFDIAG bit of the TSN0DIAG register to “1”. TSOUT is fixed to the low level after this.
4. Start temperature measurement. The setting is the same as for normal operation. Refer to **Section 11.4.1, Temperature Measurement**.
5. Check the result of measurement. The operation is the same as in normal measurement. Refer to **Section 11.4.1, Temperature Measurement**.

11.5 Calculating the Temperature

Use the following formula to convert results of temperature measurement into degrees Celsius.

$$T_{current} = \frac{150 - 25}{R_{150} - R_{25}} \times (R - R_{25}) + 25$$

$$R = \frac{A1VREFH}{5.0} \times R_{current}$$

Rcurrent: Result of AD conversion at the current temperature

Tcurrent: Current temperature

R25: Reference result of AD conversion at 25°C.

R150: Reference result of AD conversion at 150°C.

R25 and R150 are stored in TSNREFD.

CAUTION

The values of R25 and R150 stored in TSNREFD apply when A1VREFH = 5.0 V. Apply the formula after converting for the applicable voltage if A1VREFH has a different value.

Section 12 Clock Controller

12.1 Features

- Main clock oscillator (MainOSC): 16 MHz
- A high-speed internal oscillator circuit (HS IntOSC) is included.
- A clock monitor (CLMA0 to CLMA3) is included. (See **Section 31, Functional Safety** for details.)
- The frequency divided clock set by the division circuit can be output from the EXTCLKnO (n = 0, 1) pins. Furthermore, MainOSC, HS IntOSC, and the high-speed peripheral clocks can be selected with register settings.

12.2 Type of Clocks

Table 12.1 shows the list of clocks, **Table 12.2** shows the operation clocks of each functional module, and **Figure 12.1** shows a block diagram of the clock controller.

Table 12.1 List of Clocks

Clock Name	Symbol	Clock Frequency		Remarks
CPU clock	CLK_CPU	160 MHz		
High-speed peripheral clock	CLK_HSB	80 MHz		
Low-speed peripheral clock	CLK_LSB	40 MHz		
WDTA counter clock	WDTCLKI	8 MHz	250 kHz	OPWDMDS[0] setting
Main clock	clk_xincan	16 MHz		
ADCD clock	CLK_ADC	40 MHz	20 MHz	ADCKSC0CTL setting

Table 12.2 Clocks and Functional Modules

Clock Name	Functional Module Name
CPU clock	CPU, INTC
High-speed peripheral clock	RS-CAN, FlexRay, CSIH, CSIG, RLIN3, RSENT, PSI5, SCI3, WDTA, TAUD, TAUJ, TSG3, TPBA, TAPA, ENCA, OSTM, ECM, DCRA, PIC, DMAC, DTS
Low-speed peripheral clock	TSN, RS-CAN, ADCD
WDTA counter clock	WDTA
Main clock	RS-CAN
ADCD clock	ADCD

The clock name mentioned in the section of each function module means the clock frequency listed in **Table 12.1**, which corresponds to the clock name listed in **Table 12.2**.

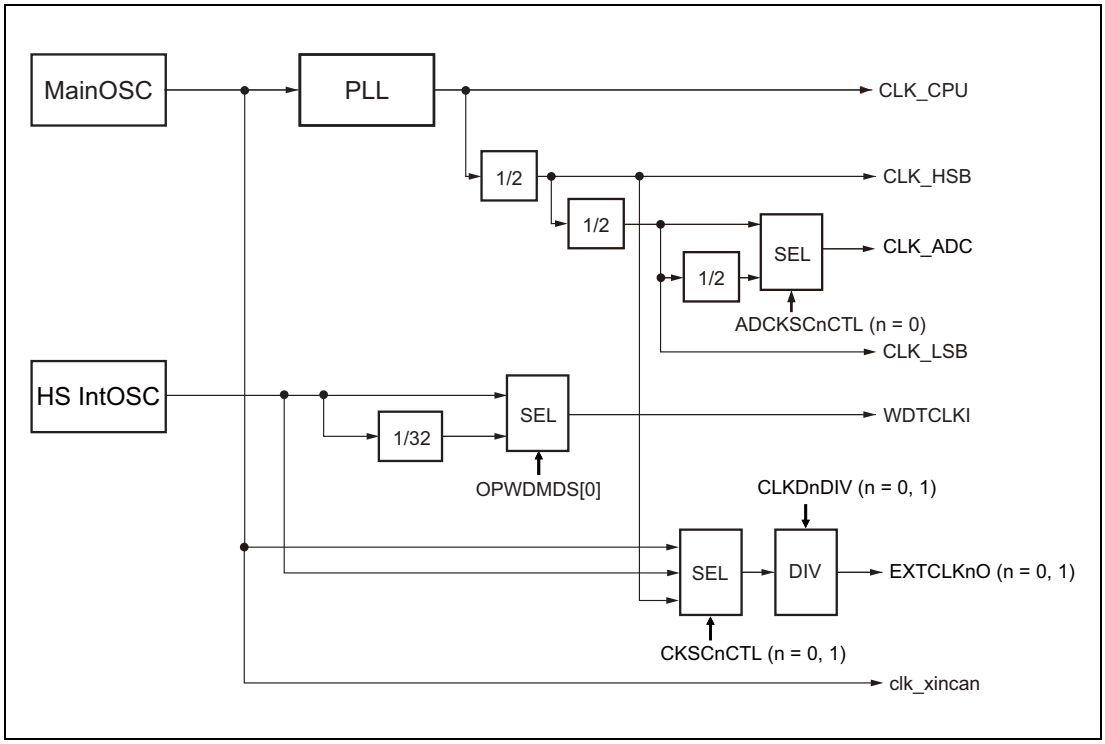

Figure 12.1 Block Diagram of Clock Controller

12.3 Input/Output Pins

Table 12.3 shows the pins related to the clock controller.

Table 12.3 Pins Related to the Clock Controller

Pin Name	Input/Output	Function
X1	Input	Connects a main clock crystal oscillator.
X2	Output	Connects a main clock crystal oscillator.
EXTCLKnO	Output	Outputs clock signals by frequency division of MainOSC, HS IntOSC, and high-speed peripheral clocks.

12.3.1 How to Connect a Crystall Oscillator

Figure 12.2 shows how to connect a crystal oscillator. If you are using the oscillator tested and recommended by Renesas (inquire separately), any external components such as a load capacitor and a dumping resistor are not necessarily required for oscillation in general. However, proper operation should be verified under actual conditions prior to use.

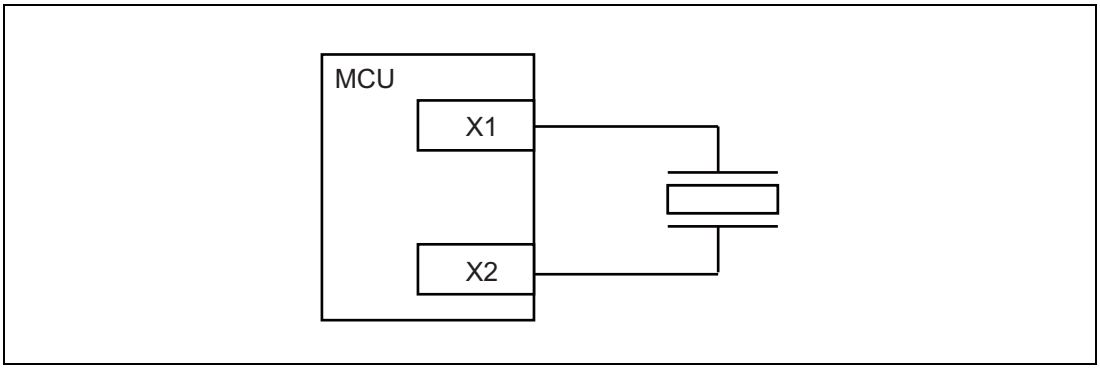

Figure 12.2 Crystal Oscillator Connection Example 1

12.3.2 Notes on Board Design

As shown in **Figure 12.3**, do not cross any other signal lines over the signal lines to pins X1 and X2. Induction may inhibit proper oscillation.

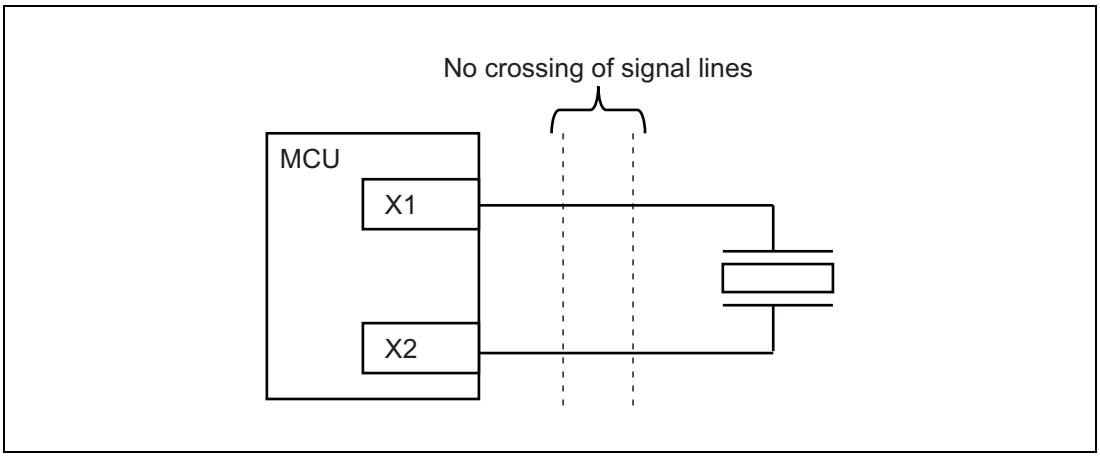

Figure 12.3 Note on Board Design

12.4 Clock Output Function

12.4.1 Features

- A function to select a clock from clocks output from the EXTCLKnO (n = 0, 1) pins is provided.
- Clock signals can be output from the EXTCLKnO (n = 0, 1) pins by the clock output function.
- Output clock frequencies can be divided by the division circuit.
- The MainOSC, HS IntOSC, and high-speed peripheral clocks can be selected with register settings.

12.4.2 Configuration

Figure 12.4 shows a block diagram of clock output function.

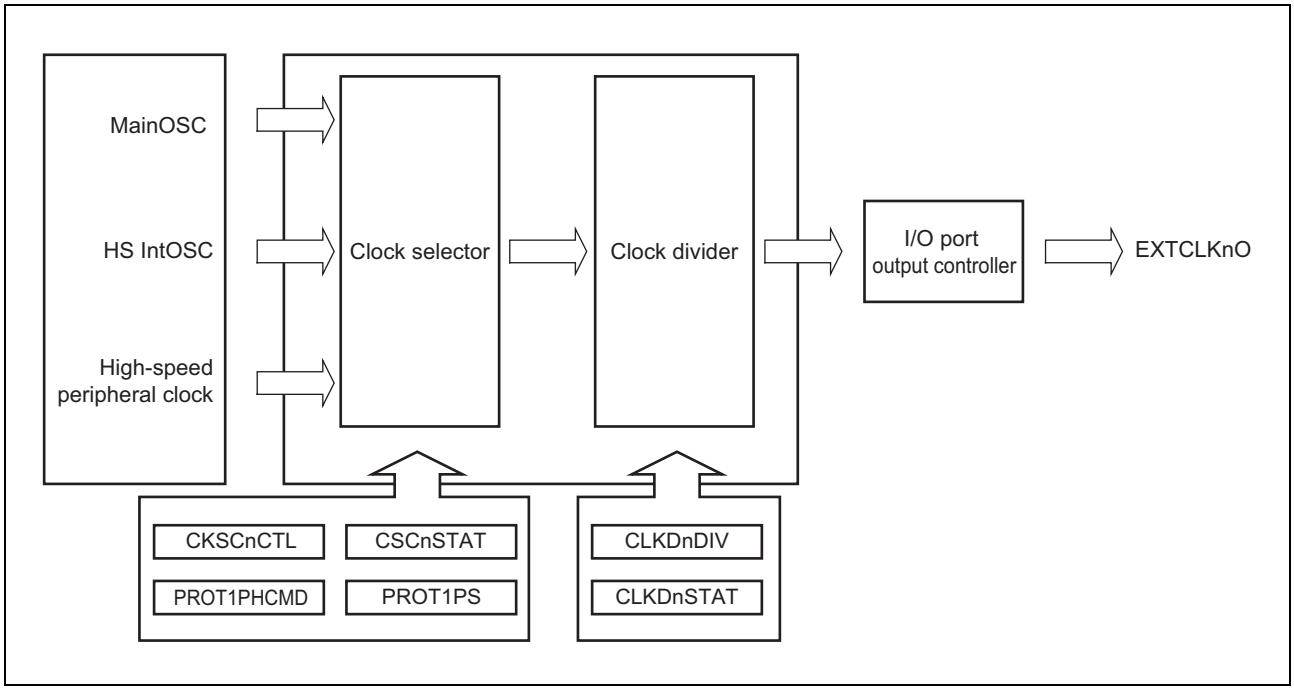

Figure 12.4 Block Diagram of Clock Output Function

12.4.3 Register Specifications

Table 12.4 shows register specifications.

Table 12.4 Register Specifications

Register Name	Abbreviation	R/W	Value after Reset	Address	Access Size
Clock selection control register 0	CKSC0CTL	R/W	$0000\ 0000_H$	$FFF8\ 9080_H$	32
Clock selection status register 0	CSC0STAT	R	$0000\ 0000_H$	$FFF8\ 9084_H$	32
Clock division control register 0	CLKD0DIV	R/W	$0000\ 0000_H$	$FFF8\ 9180_H$	32
Clock division status register 0	CLKD0STAT	R	$0000\ 0001_H$	$FFF8\ 9184_H$	32
Clock selection control register 1	CKSC1CTL	R/W	$0000\ 0000_H$	$FFF8\ 90C0_H$	32
Clock selection status register 1	CSC1STAT	R	$0000\ 0000_H$	$FFF8\ 90C4_H$	32
Clock division control register 1	CLKD1DIV	R/W	$0000\ 0000_H$	$FFF8\ 9188_H$	32
Clock division status register 1	CLKD1STAT	R	$0000\ 0001_H$	$FFF8\ 918C_H$	32
A/D clock selection control register 0	ADCKSC0CTL	R/W	$0000\ 0002_H$	$FFF8\ 9200_H$	32
A/D clock selection status register 0	ADCSC0STAT	R	$0000\ 0003_H$	$FFF8\ 9204_H$	32

12.4.3.1 CKSCnCTL — Clock Selection Control Register n (n = 0, 1)

Writing to this register is protected by a special sequence of instructions by using the protection command register PROT1PHCMD.

For details, see **Section 4.3, Write-Protected Registers**.

Access: This register can be read/written in 32-bit units.

Address: CKSC0CTL: FFF8 9080_H
CKSC1CTL: FFF8 $90C0_H$

Value after reset: 0000 0000_H

Bit	31	30	29	28	27	26	25	24	23	22	21	20	19	18	17	16
	—	—	—	—	—	—	—	—	—	—	—	—	—	—	—	—
Value after reset	0	0	0	0	0	0	0	0	0	0	0	0	0	0	0	0
R/W	R	R	R	R	R	R	R	R	R	R	R	R	R	R	R	R

Bit	15	14	13	12	11	10	9	8	7	6	5	4	3	2	1	0
	—	—	—	—	—	—	—	—	—	—	—	—	—	CKCS1	CKCS0	—
Value after reset	0	0	0	0	0	0	0	0	0	0	0	0	0	0	0	0
R/W	R	R	R	R	R	R	R	R	R	R	R	R	R	R/W	R/W	R

Table 12.5 CKSCnCTL Register Contents

Bit Position	Bit Name	Function
31 to 3	Reserved	When read, the value after reset is read. When writing, write the value after reset.
2, 1	CKCS[1:0]	Clock Selection 00: No output (initial value) 01: MainOSC 10: HS IntOSC 11: High-speed peripheral clock (80 MHz)
0	Reserved	When read, the value after reset is read. When writing, write the value after reset.

CAUTION

The CKSCnCTL register must not be modified when the CLKDnDIV register is not 0000 0000_H or the CLKDnSTAT register is not 0000 00001_H.
While CLKDnDIV = 0000 0000_H and CLKDnSTAT = 0000 00001_H, EXTCLKnO output is stopped. Change the value of the register in this situation.

12.4.3.2 CSCnSTAT — Clock Selection Status Register n (n = 0, 1)

Access: This register can be read in 32-bit units.

Address: CSC0STAT: FFF8 9084_H
CSC1STAT: FFF8 $90C4_H$

Value after reset: $0000\ 0000_H$

Bit	31	30	29	28	27	26	25	24	23	22	21	20	19	18	17	16
	—	—	—	—	—	—	—	—	—	—	—	—	—	—	—	—
Value after reset	0	0	0	0	0	0	0	0	0	0	0	0	0	0	0	0
R/W	R	R	R	R	R	R	R	R	R	R	R	R	R	R	R	R

Bit	15	14	13	12	11	10	9	8	7	6	5	4	3	2	1	0
	—	—	—	—	—	—	—	—	—	—	—	—	—	CLK SEL1	CLK SEL0	CLK ACT
Value after reset	0	0	0	0	0	0	0	0	0	0	0	0	0	0	0	0
R/W	R	R	R	R	R	R	R	R	R	R	R	R	R	R	R	R

Table 12.6 CSCnSTAT Register Contents

Bit Position	Bit Name	Function
31 to 3	Reserved	When read, the value after reset is read.
2, 1	CLKSEL[1:0]	Indicate the clock selected. 00: No output (initial value) 01: MainOSC 10: HS IntOSC 11: High-speed peripheral clock (80 MHz)
0	CLKACT	This bit indicates that the corresponding domain clock is active and is in synchronization with the clock selected by the CLKSEL bits. 0: Non-active 1: Active

12.4.3.3 CLKDnDIV — Clock Division Register n (n = 0, 1)

Access: This register can be read/written in 32-bit units.

Address: CLKD0DIV: FFF8 9180_H
CLKD1DIV: FFF8 9188_H

Value after reset: 0000 0000_H

Bit	31	30	29	28	27	26	25	24	23	22	21	20	19	18	17	16
	—	—	—	—	—	—	—	—	—	—	—	—	—	—	—	—
Value after reset	0	0	0	0	0	0	0	0	0	0	0	0	0	0	0	0
R/W	R	R	R	R	R	R	R	R	R	R	R	R	R	R	R	R

Bit	15	14	13	12	11	10	9	8	7	6	5	4	3	2	1	0
	—	—	—	—	—	—	—	CLKDn DIV8	CLKDn DIV7	CLKDn DIV6	CLKDn DIV5	CLKDn DIV4	CLKDn DIV3	CLKDn DIV2	CLKDn DIV1	CLKDn DIV0
Value after reset	0	0	0	0	0	0	0	0	0	0	0	0	0	0	0	0
R/W	R	R	R	R	R	R	R	R/W	R/W	R/W	R/W	R/W	R/W	R/W	R/W	R/W

Table 12.7 CLKDnDIV Register Contents

Bit Position	Bit Name	Function
31 to 9	Reserved	When read, the value after reset is read. When writing, write the value after reset.
8 to 0	CLKDnDIV[8:0]	EXTCLKnO Output Division Ratio Selection 000000000: No clock output (low level) 000000001: EXTCLKnO = CLKIN/1 000000010: EXTCLKnO = CLKIN/2 000000011: EXTCLKnO = CLKIN/3 000000100: EXTCLKnO = CLKIN/4 000000101: EXTCLKnO = CLKIN/5 : 111111110: EXTCLKnO = CLKIN/510 111111111: EXTCLKnO = CLKIN/511

CAUTION

Set the frequency of EXTCLKnO to a value less than 20 MHz.
CLKIN indicates the clock selected by the CKSCnCTL register.
Do not write to the CLKDnDIV register while the setting of the CLKDnSYNC bit is 0.

12.4.3.4 CLKDnSTAT — Clock Status Register n (n = 0, 1)

Access: This register can be read in 32-bit units.

Address: CLKD0STAT: FFF8 9184_H
CLKD1STAT: FFF8 $918C_H$

Value after reset: 0000 0001_H

Bit	31	30	29	28	27	26	25	24	23	22	21	20	19	18	17	16
	—	—	—	—	—	—	—	—	—	—	—	—	—	—	—	—
Value after reset	0	0	0	0	0	0	0	0	0	0	0	0	0	0	0	0
R/W	R	R	R	R	R	R	R	R	R	R	R	R	R	R	R	R

Bit	15	14	13	12	11	10	9	8	7	6	5	4	3	2	1	0
	—	—	—	—	—	—	—	—	—	—	—	—	—	—	CLKDn CLKACT	CLKDn SYNC
Value after reset	0	0	0	0	0	0	0	0	0	0	0	0	0	0	0	1
R/W	R	R	R	R	R	R	R	R	R	R	R	R	R	R	R	R

Table 12.8 CLKDnSTAT Register Contents

Bit Position	Bit Name	Function
31 to 2	Reserved	When read, the value after reset is read.
1	CLKDn CLKACT	Frequency Divided Clock Active 0: EXTCLKnO is inactive. (EXTCLKnO = low level) 1: EXTCLKnO is active.
0	CLKDn SYNC	Frequency Divided Clock Synchronization 0: EXTCLKnO output is not in accordance with CLKDnDIV register settings. 1: EXTCLKnO output is in accordance with CLKDnDIV register settings.

12.4.3.5 ADCKSC0CTL — A/D Clock Selection Control Register 0

Writing to this register is protected by a special sequence of instructions by using the protection command register PROT1PHCMD.

For details, see **Section 4.3, Write-Protected Registers**.

Access: This register can be read/written in 32-bit units.

Address: FFF8 9200_H

Value after reset: 0000 0002_H

Bit	31	30	29	28	27	26	25	24	23	22	21	20	19	18	17	16
	—	—	—	—	—	—	—	—	—	—	—	—	—	—	—	—
Value after reset	0	0	0	0	0	0	0	0	0	0	0	0	0	0	0	0
R/W	R	R	R	R	R	R	R	R	R	R	R	R	R	R	R	R

Bit	15	14	13	12	11	10	9	8	7	6	5	4	3	2	1	0
	—	—	—	—	—	—	—	—	—	—	—	—	—	AD CKCS1	AD CKCS0	—
Value after reset	0	0	0	0	0	0	0	0	0	0	0	0	0	0	1	0
R/W	R	R	R	R	R	R	R	R	R	R	R	R	R	R/W	R/W	R

Table 12.9 ADCKSC0CTL Register Contents

Bit Position	Bit Name	Function
31 to 3	Reserved	When read, the value after reset is read. When writing, write the value after reset.
2, 1	ADCKCS[1:0]	Clock selection 00: Setting prohibited 01: CLK_LSB (initial value) 10: CLK_LSB/2 11: Setting prohibited
0	Reserved	When read, the value after reset is read. When writing, write the value after reset.

CAUTION

Do not change the setting of the clock selection bits while the A/D converter is in use.

12.4.3.6 ADCKSC0STAT — A/D Clock Selection Status Register 0

Access: This register can be read in 32-bit units.

Address: FFF8 9204_H

Value after reset: 0000 0003_H

Bit	31	30	29	28	27	26	25	24	23	22	21	20	19	18	17	16
	—	—	—	—	—	—	—	—	—	—	—	—	—	—	—	—
Value after reset	0	0	0	0	0	0	0	0	0	0	0	0	0	0	0	0
R/W	R	R	R	R	R	R	R	R	R	R	R	R	R	R	R	R

Bit	15	14	13	12	11	10	9	8	7	6	5	4	3	2	1	0
	—	—	—	—	—	—	—	—	—	—	—	—	—	ADCLK SEL1	ADCLK SEL0	ADCLK ACT
Value after reset	0	0	0	0	0	0	0	0	0	0	0	0	0	0	1	1
R/W	R	R	R	R	R	R	R	R	R	R	R	R	R	R	R	R

Table 12.10 ADCSC0STAT Register Contents

Bit Position	Bit Name	Function
31 to 3	Reserved	When read, the value after reset is read.
2, 1	ADCLKSEL[1:0]	Indicate the clock selected. 01: CLK_LSB (initial value) 10: CLK_LSB/2
0	ADCLKACT	This bit indicates that the corresponding domain clock is active and is in synchronization with the clock selected by the ADCLKSEL bits. 0: Non-active 1: Active

12.5 Operation

12.5.1 Operation when EXTCLKnO Clock Divider Function is Used

To produce an output on the EXTCLKnO pin at a specified value, follow the procedure below to make the settings to select the source clock and division ratio.

- Selecting the source clock

1. Check the following to confirm that EXTCLKnO output is stopped.
   - CLKDnDIV = 0000 0000_H and
   - CLKDnSTAT = 0000 0001_H
     (CLKDnSTAT.CLKDnCLKACT = 0, CLKDnSTAT.CLKDnSYNC = 1)
2. Set CKSCnCTL.CKCS[1:0] to select the clock signal.
3. Read the CSCnSTAT register to confirm that the selected clock signal is active.
   - Confirm that the value of CSCnSTAT.CLKSEL[1:0] = the value of CKSCnCTL.CKCS[1:0].
   - Confirm that CSCnSTAT.CLKACT = 1

- Selecting the clock divisor

1. Confirm that CLKDnSTAT.CLKDnSYNC = 1.
2. Set CLKDnDIV to select the EXTCLKnO output division ratio.
3. Confirm that CLKDnSTAT.CLKDnSYNC = 1.

- Changing the setting of the clock selection bits (the “unselected” setting is included in this procedure)

1. Follow the above procedure for selecting the clock divisor to set CLKDnDIV = 0000 0000_H (stopping output of clock signals).
2. Follow the above procedure for selecting the source clock to set CKSCnCTL.CKCS[1:0] to select the changed clock signal.

Section 13 Clocked Serial Interface G (CSIG)

This section contains a generic description of the Clocked Serial Interface G (CSIG).

The first part of this section describes all RH850/P1x specific properties, such as the number of units, register base addresses, etc. The remainder of the section describes the functions and registers of the CSIG.

13.1 Features of RH850/P1x CSIG

13.1.1 Number of Units

This microcontroller has the following number of units of the CSIG.

Each CSIG unit has one channel interface. “Number of channels” is used with the same meaning as “number of units” in this section.

Table 13.1 Number of Units

Product Name	RH850/P1x 100 pins	RH850/P1x 144 pins
Number of Units	1	
Name	CSIGn (n = 0)	

Note: The channel names are same as those of the corresponding units.

Table 13.2 Index

Index	Meaning
n	Throughout this section, the individual CSIG units are identified by the index “n” (n = 0): for example, CSIGnCTL0 is the CSIGn control register 0.

13.1.2 Register Base Address

CSIG base addresses are listed in the following table.

CSIG register addresses are given as offsets from the base addresses in general.

Table 13.3 Register Base Address

Base Address Name	Base Address
<CSIG0_base>	FFD8 $A000_H$

13.1.3 Clock Supply

Clock supply by and to CSIG is listed in the following table.

Table 13.4 Clock Supply

Unit Name	Clock for the Unit	Supply Clock Name
CSIGn	PCLK	High-speed peripheral clock CLK_HSB

13.1.4 Interrupt Request

CSIG interrupt requests are listed in the following table.

Table 13.5 Interrupt Requests

Unit Interrupt Name	Outline	Interrupt Number	DMA/DTS Trigger Number
CSIG0			
INTCSIG0IC	Communication status interrupt	175	86
INTCSIG0IR	Receive status interrupt	176	85
INTCSIG0IRE	Receive error interrupt	174	—

13.1.5 Reset Sources

CSIG reset sources are listed in the following table. CSIG is initialized by these reset sources.

Table 13.6 Reset Sources

Unit Name	Reset Source
CSIGn	Reset controller SYSRES

13.1.6 External Input/Output Signals

External input/output signals of CSIG are listed below.

Table 13.7 External Input/Output Signals

Unit Signal Name	Outline	Alternative port pin signal
CSIG0		
CSIGTSCK	Serial clock signal input	CSIG0SCI
	Serial clock signal output	CSIG0SCO
CSIGTSI	Serial data input signal	CSIG0SI
CSIGTSO	Serial data output signal	CSIG0SO
CSIGTRYI	Ready/busy input signal	CSIG0RYI
CSIGTRYO	Ready/busy output signal	CSIG0RYO

13.1.7 Data Consistency Check

The following table lists the port pins on which CSIGnSO pin functions are multiplexed and whether or not the CSIGnSO pin functions support data consistency checking. See **Section 13.5.10, Error Detection** for details on data consistency checking.

Table 13.8 Data Consistency Checking and Target Port Pins

Unit Signal Name	Port Pin Name	Alternative Function	Data Consistency Checking
CSIG0			
CSIGTSO	P3_1*[1]	ALT-OUT6	Supported
	P5_1	ALT-OUT1	Supported

Note 1. Available in 144-pin devices.

13.1.8 Combinations of Pins and Ports

Combinations of CSIG pins and ports are listed in the following table.

Table 13.9 Combinations of Pins and Ports

Function	Pin Name	Port Name		
		Group 1	Group 2	Group 3
CSIG0	CSIG0RYI	P3_5	—	—
	CSIG0RYO	P3_4	—	—
	CSIG0SCI/ CSIG0SCO	P3_2*[1]	P5_2*[1]	P5_4
	CSIG0SI	P3_0*[1]	P5_0	P5_0
	CSIG0SO	P3_1*[1]	P5_1	P5_1

Note 1. Available in devices with 144-pin.

13.2 Overview

13.2.1 Functional Overview

- Three-wire serial synchronous data transfer
- Master mode and slave mode
- Built-in baud rate generator
- Transfer clock frequency is adjustable in master mode. In slave mode, transfer clock frequency is determined by input clock.
- Maximum transmission speed:
  - in master mode: 8 MHz
  - in slave mode: 6.6 MHz
- Clock phase and data phase are selectable.
- Data transfer with MSB first or data transfer with LSB first is selectable.
- Transfer data length selectable from 7 to 16 bits in 1-bit units
- EDL (Extended Data Length) function for transferring data with more than 16 bits is incorporated.
- Three selectable transfer modes:
  - transmit-only mode
  - receive-only mode
  - transmit/receive mode
- Handshake function is included.
- Error detection (data consistency check, parity, overrun) function is incorporated.
- Three different interrupt request signals (INTCSIG0IC, INTCSIG0IR, INTCSIG0IRE)
- LBM (Loop Back Mode) function for self-test is incorporated.

13.2.2 Functional Description

The CSIG uses three signals for communication:

- Transmission clock CSIGTSCK (output in master mode, input in slave mode)
- Serial data output signal CSIGTSO
- Serial data input signal CSIGTSI

CSIGnCTL2 is used to select the mode in which the CSIG should be operated: master mode or slave mode.

Other signals are available for external control and monitoring.

- CSIGTRYO: Ready/busy output signal (handshake signal)
- CSIGTRYI: Ready/busy input signal (handshake signal)

Data transmission is bit-wise and serial, and synchronous to the transmission clock.

The most important registers for setting up the CSIG are:

Table 13.10 Main Registers of CSIG

Register	Function
CSIGnCTL0	Enables/disables operating clock, data transmission, and data reception
CSIGnCTL1	Controls options like interrupt timing, extended data length, data consistency check, loop-back mode, handshake, etc.
CSIGnCTL2	Selects master or slave mode and also selects the transfer clock frequency of the on-chip baud rate generator (BRG) in master mode.
CSIGnCFG0	Configures the communication protocol

13.2.3 Block Diagram

The block diagram shows the main components of the CSIG.

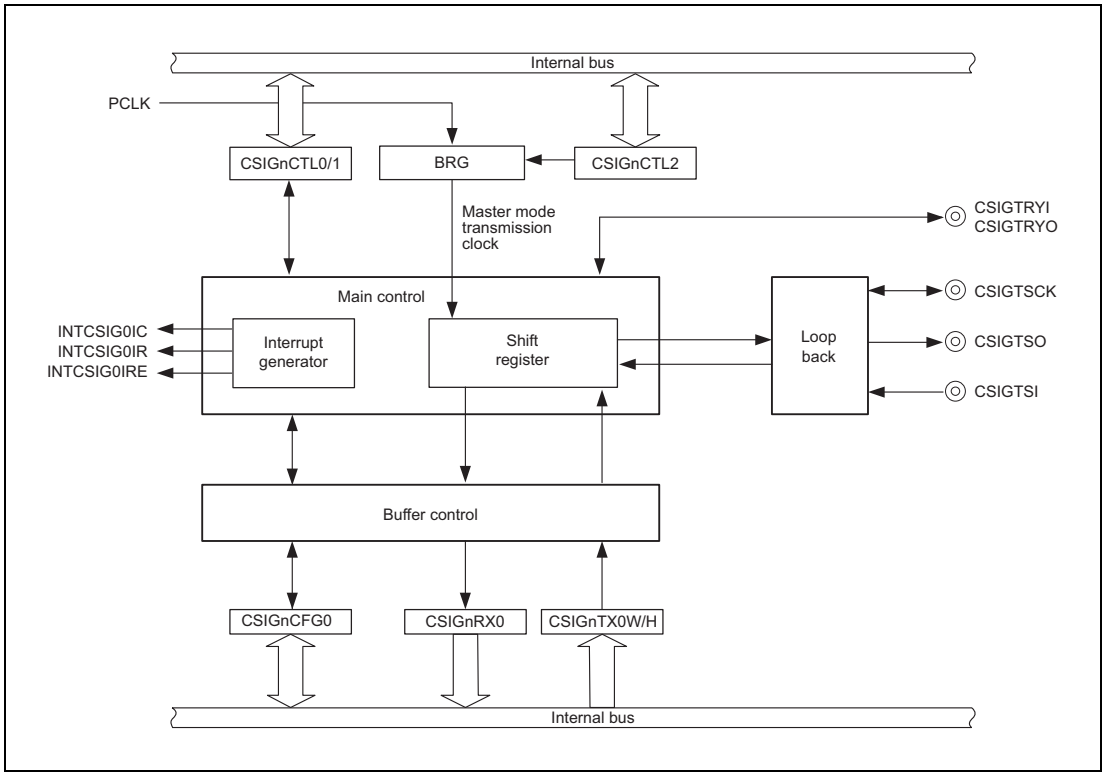

Figure 13.1 CSIG Block Diagram

In master mode, the transmission clock CSIGTSCK is generated by the built-in baud rate generator (BRG). In slave mode, the transmission clock is received from an external source.

13.3 Registers

13.3.1 List of Registers

CSIG registers are listed in the following table.

The base address <CSIGn_base> of the CSIGn is defined in **Section 13.1.2, Register Base Address**.

Table 13.11 Registers

Module	Register	Symbol	Address
CSIGn	CSIGn control register 0	CSIGnCTL0	<CSIGn_base> + 0000_H
CSIGn	CSIGn control register 1	CSIGnCTL1	<CSIGn_base> + 0010_H
CSIGn	CSIGn control register 2	CSIGnCTL2	<CSIGn_base> + 0014_H
CSIGn	CSIGn status register 0	CSIGnSTR0	<CSIGn_base> + 0004_H
CSIGn	CSIGn status clear register 0	CSIGnSTCR0	<CSIGn_base> + 0008_H
CSIGn	CSIGn Rx-only mode control register 0	CSIGnBCTL0	<CSIGn_base> + 1000_H
CSIGn	CSIGn configuration register 0	CSIGnCFG0	<CSIGn_base> + 1010_H
CSIGn	CSIGn transmission register 0 for word access	CSIGnTX0W	<CSIGn_base> + 1004_H
CSIGn	CSIGn transmission register 0 for half word access	CSIGnTX0H	<CSIGn_base> + 1008_H
CSIGn	CSIGn reception register 0	CSIGnRX0	<CSIGn_base> + $100C_H$

13.3.2 CSIGnCTL0 — CSIGn Control Register 0

This register controls the operation clock and enables or disables transmission/reception.

Access: This register can be read/written in 8-bit units.

Address: <CSIGn_base> + 0000_H

Value after reset: 00_H This register is initialized by a reset from any source.

Bit	7	6	5	4	3	2	1	0
	CSIGnPWR	CSIGnTXE	CSIGnRXE	—	—	—	—	CSIGnMBS
Value after reset	0	0	0	0	0	0	0	0
R/W	R/W	R/W	R/W	R	R	R	R	R/W

Table 13.12 CSIGnCTL0 Register Contents

Bit Position	Bit Name	Function
7	CSIGnPWR	Controls operation clock: 0: Stop operation clock 1: Provide operation clock Clearing CSIGnPWR to 0 resets the internal circuits, stops operation, and sets the CSIG to standby state. No clock is provided to internal circuits. If CSIGnPWR is cleared during communication, ongoing communication is aborted. In that case, communication settings must be made from the beginning.
6	CSIGnTXE	Enables/disables transmission: 0: Transmission disabled 1: Transmission enabled
5	CSIGnRXE	Enables/disables reception: 0: Receive disabled 1: Receive enabled
4 to 1	Reserved	When read, the value after reset is read. When writing, write the value after reset.
0	CSIGnMBS	To use CSIG, always write 1 to this bit. (The value after reset is “0”.)

CAUTION

When setting this register, refer to **Table 13.22, List of Cautions when Setting Registers**.

13.3.3 CSIGnCTL1 — CSIGn Control Register 1

This register specifies the interrupt timing and the interrupt delay mode. It enables/disables extended data length control, data consistency check, loop-back mode, and handshake function.

Access: This register can be read/written in 32-bit units.

Address: <CSIGn_base> + 0010_H

Value after reset: $0000\ 0000_H$ This register is initialized by a reset from any source.

Bit	31	30	29	28	27	26	25	24	23	22	21	20	19	18	17	16
	—	—	—	—	—	—	—	—	—	—	—	—	—	—	CSIGn CKR	CSIGn SLIT
Value after reset	0	0	0	0	0	0	0	0	0	0	0	0	0	0	0	0
R/W	R	R	R	R	R	R	R	R	R	R	R	R	R	R	R/W	R/W

Bit	15	14	13	12	11	10	9	8	7	6	5	4	3	2	1	0
	—	—	—	—	—	—	—	—	CSIGn EDLE	—	CSIGn DCS	—	CSIGn LBM	CSIGn SIT	CSIGn HSE	—
Value after reset	0	0	0	0	0	0	0	0	0	0	0	0	0	0	0	0
R/W	R	R	R	R	R	R	R	R	R/W	R	R/W	R	R/W	R/W	R/W	R

Table 13.13 CSIGnCTL1 Register Contents (1/2)

Bit Position	Bit Name	Function
31 to 18	Reserved	When read, the value after reset is read. When writing, write the value after reset.
17	CSIGnCKR	CSIGTSCK clock inverting function 0: The default level of CSIGTSCK is high level. 1: The default level of CSIGTSCK is low level. The CSIGnCKR bit is used in combination with the CSIGnCFG0.CSIGnDAP bit. For details, refer to **Section 13.3.8, CSIGnCFG0 — CSIGn Configuration Register 0**.
16	CSIGnSLIT	Selects the timing of interrupt INTCSIG0IC: 0: Normal interrupt timing (interrupt is generated after the transfer) 1: Interrupt generation when CSIGnTX0W/H is free for next data. For details, see **Section 13.4.2, INTCSIG0IC (Communication Status Interrupt)**
15 to 8	Reserved	When read, the value after reset is read. When writing, write the value after reset.
7	CSIGnEDLE	Enables/disables extended data length (EDL) mode: 0: Extended data length mode disabled 1: Extended data length mode enabled For details, refer to **Section 13.5.5.2, Data Length Selection with Extended Data Length**.
6	Reserved	When read, the value after reset is read. When writing, write the value after reset.
5	CSIGnDCS	Enables/disables data consistency check: 0: Data consistency check disabled 1: Data consistency check enabled For details, refer to **Section 13.5.10.1, Data Consistency Check**.
4	Reserved	When read, the value after reset is read. When writing, write the value after reset.
3	CSIGnLBM	Controls loop-back mode (LBM): 0: Loop-back mode deactivated 1: Loop-back mode activated Loop-back mode can be set only in master mode. Set this bit to 0 in slave mode. For details, refer to **Section 13.5.9, Loop-Back Mode**.

Table 13.13 CSIGnCTL1 Register Contents (2/2)

Bit Position	Bit Name	Function
2	CSIGnSIT	Selects interrupt delay mode: 0: No delay 1: Half clock delay for all interrupts This bit is only valid in master mode. In slave mode, no delay is generated. For details, see **Section 13.4.1, Interrupt Delay**.
1	CSIGnHSE	Enables or disables the handshake function: 0: Handshake function disabled 1: Handshake function enabled For details refer to **Section 13.5.8, Handshake Function**.
0	Reserved	When read, the value after reset is read. When writing, write the value after reset.

CAUTION

When setting this register, refer to **Table 13.22, List of Cautions when Setting Registers**.

13.3.4 CSIGnCTL2 — CSIGn Control Register 2

This register selects the communication clock.

Access: This register can be read/written in 16-bit units.

Address: <CSIGn_base> + 0014_H

Value after reset: $E000_H$ This register is initialized by a reset from any source.

Bit	15	14	13	12	11	10	9	8	7	6	5	4	3	2	1	0
	CSIGnPRS[2:0]			—	CSIGnBRS[11:0]											
Value after reset	1	1	1	0	0	0	0	0	0	0	0	0	0	0	0	0
R/W	R/W	R/W	R/W	R	R/W	R/W	R/W	R/W	R/W	R/W	R/W	R/W	R/W	R/W	R/W	R/W

Table 13.14 CSIGnCTL2 Register Contents

Bit Position	Bit Name	Function
15 to 13	CSIGnPRS [2:0]	Selects the value of the prescaler:
12	Reserved	When read, the value after reset is read. When writing, write the value after reset.
11 to 0	CSIGnBRS [11:0]	Selects the baud rate. Settings of the CSIGnBRS[11:0] bits are valid only in master mode. They are ignored in slave mode.

CSIGn PRS2	CSIGn PRS1	CSIGn PRS0	Prescaler output (PRSOUT)
0	0	0	PCLK (master mode)
0	0	1	PCLK / 2 (master mode)
0	1	0	PCLK / 4 (master mode)
0	1	1	PCLK / 8 (master mode)
1	0	0	PCLK / 16 (master mode)
1	0	1	PCLK / 32 (master mode)
1	1	0	PCLK / 64 (master mode)
1	1	1	External clock via CSIGTSCK (slave mode)

CSIGnBRS [11:0]	Baud rate at CSIGTSCK
0	BRG is stopped
1	PCLK / (2^{α} × 1 × 2)
2	PCLK / (2^{α} × 2 × 2)
3	PCLK / (2^{α} × 3 × 2)
4	PCLK / (2^{α} × 4 × 2)
...	...
4095	PCLK / (2^{α} × 4095 × 2)

Note: α = 0 to 6 (value set by CSIGnPRS[2:0])

CAUTION

When setting this register, refer to **Table 13.22, List of Cautions when Setting Registers**.

13.3.5 CSIGnSTR0 — CSIGn Status Register 0

This register indicates the status of the CSIG.

Access: This register can only be read in 32-bit units.

Address: <CSIGn_base> + 0004_H

Value after reset: $0000\ 0010_H$ This register is initialized by a reset from any source.

Bit	31	30	29	28	27	26	25	24	23	22	21	20	19	18	17	16
	—	—	—	—	—	—	—	—	—	—	—	—	—	—	—	—
Value after reset	0	0	0	0	0	0	0	0	0	0	0	0	0	0	0	0
R/W	R	R	R	R	R	R	R	R	R	R	R	R	R	R	R	R

Bit	15	14	13	12	11	10	9	8	7	6	5	4	3	2	1	0
	—	—	—	—	—	—	—	—	CSIGn TSF	—	—	—	CSIGn DCE	—	CSIGn PE	CSIGn OVE
Value after reset	0	0	0	0	0	0	0	0	0	0	0	1	0	0	0	0
R/W	R	R	R	R	R	R	R	R	R	R	R	R	R	R	R	R

Table 13.15 CSIGnSTR0 Register Contents (1/2)

Bit Position	Bit Name	Function
31 to 8	Reserved	When read, the value after reset is read.
7	CSIGnTSF	Transfer Status Flag 0: Idle state 1: Communication is in progress or being prepared The timing to set or clear this bit is as follows: **Master mode / Timing to Set / Timing to Clear** Tx only mode: Writing to transmit register — Within a half clock cycle from the last serial clock edge Tx/Rx mode: Writing to transmit register — Within a half clock cycle from the last serial clock edge Rx only mode: Reading from receive register — Within a half clock cycle from the last serial clock edge **Slave mode / Timing to Set / Timing to Clear** Tx only mode: Writing to transmit register — Within a half clock cycle from the last serial clock edge Tx/Rx mode: Writing to transmit register — Within a half clock cycle from the last serial clock edge Rx only mode: CSIGTSCK input — Within a half clock cycle from the last serial clock edge
6 to 4	Reserved	When read, the value after reset is read.
3	CSIGnDCE	Data Consistency Check Error Flag 0: No data consistency check error detected 1: Data consistency check error detected This bit is cleared by writing 1 to CSIGnSTCR0.CSIGnDCEC. However, if setting this bit to 1 due to detection of a data consistency check error and clearing this bit to 0 by CSIGnDCEC in CSIGnSTCR0 take place at the same time, setting this bit to 1 due to detection of a data consistency check error takes precedence. This bit is initialized when CSIGnPWR in CSIGnCTL0 changes from 0 to 1 or from 1 to 0.
2	Reserved	When read, the value after reset is read.

Table 13.15 CSIGnSTR0 Register Contents (2/2)

Bit Position	Bit Name	Function
1	CSIGnPE	Parity Error Flag 0: No parity error detected 1: Parity error detected This bit is cleared by writing 1 to CSIGnPEC in CSIGnSTCR0. However, if setting this bit to 1 due to detection of a parity error and clearing this bit to 0 by CSIGnPEC in CSIGnSTCR0 take place at the same time, setting this bit to 1 due to detection of a parity error takes precedence. This bit is initialized when CSIGnPWR in CSIGnCTL0 changes from 0 to 1 or from 1 to 0.
0	CSIGnOVE	Overrun Error Flag 0: No overrun error detected 1: Overrun error detected This bit is cleared by writing 1 to CSIGnOVEC in CSIGnSTCR0. However, if setting this bit to 1 due to detection of an overrun error and clearing this bit to 0 by CSIGnOVEC in CSIGnSTCR0 take place at the same time, setting this bit to 1 due to detection of an overrun error takes precedence. This bit is initialized when CSIGnPWR in CSIGnCTL0 changes from 0 to 1 or from 1 to 0.

CAUTION

When setting this register, refer to **Table 13.22, List of Cautions when Setting Registers**.

13.3.6 CSIGnSTCR0 — CSIGn Status Clear Register 0

This register clears the status flags of the CSIGnSTR0 status register.

Access: This register can be read/written in 16-bit units.
When read, the value 0000_H is always returned.

Address: <CSIGn_base> + 0008_H

Value after reset: 0000_H This register is initialized by a reset from any source.

Bit	15	14	13	12	11	10	9	8	7	6	5	4	3	2	1	0
	—	—	—	—	—	—	—	—	—	—	—	—	CSIGn DCEC	—	CSIGn PEC	CSIGn OVEC
Value after reset	0	0	0	0	0	0	0	0	0	0	0	0	0	0	0	0
R/W	R	R	R	R	R	R	R	R	R	R	R	R	R/W	R	R/W	R/W

Table 13.16 CSIGnSTCR0 Register Contents

Bit Position	Bit Name	Function
15 to 4	Reserved	When read, the value after reset is read. When writing, write the value after reset.
3	CSIGnDCEC	This bit controls the data consistency check error flag clear command. 0: No operation. 1: Clear data consistency check error flag (CSIGnSTR0.CSIGnDCE) Read value is always 0.
2	Reserved	When read, the value after reset is read. When writing, write the value after reset.
1	CSIGnPEC	This bit controls the parity error flag clear command. 0: No operation. Read value is always 0. 1: Clear parity error flag (CSIGnSTR0.CSIGnPE) Read value is always 0.
0	CSIGnOVEC	This bit controls the overrun error flag clear command. 0: No operation. Read value is always 0. 1: Clear overrun error flag (CSIGnSTR0.CSIGnOVE) Read value is always 0.

13.3.7 CSIGnBCTL0 — CSIGn Rx-only Mode Control Register 0

This register enables/disables the data transfer in Rx-only mode.

Access: This register can be read/written in 8-bit units.

Address: <CSIGn_base> + 1000_H

Value after reset: 01_H This register is initialized by a reset from any source.

Bit	7	6	5	4	3	2	1	0
	—	—	—	—	—	—	—	CSIGnSCE
Value after reset	0	0	0	0	0	0	0	1
R/W	R	R	R	R	R	R	R	R/W

Table 13.17 CSIGnBCTL0 Register Contents

Bit Position	Bit Name	Function
7 to 1	Reserved	When read, the value after reset is read. When writing, write the value after reset.
0	CSIGnSCE	Disables/enables next data reception start by reading CSIGnRX0 0: Next reception disabled 1: Next reception enabled For details refer to **Section 13.5.4.2, Receive-Only Mode**.

CAUTION

When setting this register, refer to **Table 13.22, List of Cautions when Setting Registers**.

13.3.8 CSIGnCFG0 — CSIGn Configuration Register 0

This register configures the communication protocol – data length, parity, transfer direction, clock phase, and data phase.

Access: This register can be read/written in 32-bit units.

Address: <CSIGn_base> + 1010_H

Value after reset: $0000\ 0000_H$ This register is initialized by a reset from any source.

Bit	31	30	29	28	27	26	25	24	23	22	21	20	19	18	17	16
	—	—	CSIGnPS[1:0]		CSIGnDLS[3:0]				—	—	—	—	—	CSIGn DIR	—	CSIGn DAP
Value after reset	0	0	0	0	0	0	0	0	0	0	0	0	0	0	0	0
R/W	R	R	R/W	R/W	R/W	R/W	R/W	R/W	R	R	R	R	R	R/W	R	R/W

Bit	15	14	13	12	11	10	9	8	7	6	5	4	3	2	1	0
	—	—	—	—	—	—	—	—	—	—	—	—	—	—	—	—
Value after reset	0	0	0	0	0	0	0	0	0	0	0	0	0	0	0	0
R/W	R	R	R	R	R	R	R	R	R	R	R	R	R	R	R	R

Table 13.18 CSIGnCFG0 Register Contents (1/2)

Bit Position	Bit Name	Function
31, 30	Reserved	When read, the value after reset is read. When writing, write the value after reset.
29, 28	CSIGnPS[1:0]	Specifies parity. CSIGn PS1 / CSIGn PS0 / Transmission / Reception 0 / 0 / No parity transmitted / No parity expected 0 / 1 / Add parity bit fixed at 0 / Parity bit is expected but not judged 1 / 0 / Add odd parity / Odd parity bit is expected 1 / 1 / Add even parity / Even parity bit is expected
27 to 24	CSIGnDLS [3:0]	Specifies data length. 0: Data length is 16 bits 1: Data length is 1 bit 2: Data length is 2 bits ... 15: Data length is 15 bits **CAUTION** Do not set bits CSIGnCFG0.CSIGnDLS[3:0] for a value 1 to 6 when the extended data length function is disabled with bit CSIGnCTL1.CSIGnEDLE set to 0. Furthermore, it is forbidden to transmit two consecutive data with a data length of less than 7 bits.
23 to 19	Reserved	When read, the value after reset is read. When writing, write the value after reset.
18	CSIGnDIR	Selects the serial data direction. 0: Data is sent/received with MSB first 1: Data is sent/received with LSB first
17	Reserved	When read, the value after reset is read. When writing, write the value after reset.

Table 13.18 CSIGnCFG0 Register Contents (2/2)

Bit Position	Bit Name	Function
16	CSIGnDAP	Data phase selection bit Select a data phase together with the CSIGnCKR bit in CSIGnCTL1. See the following table for clock phase and data phase.

CSIGnCTL1. CSIGnCKR	CSIGn DAP	Clock and Data Phase Selection
0	0	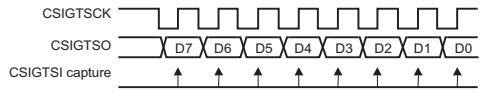
0	1	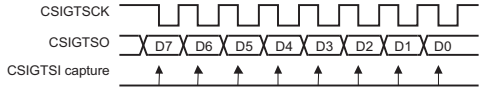
1	0	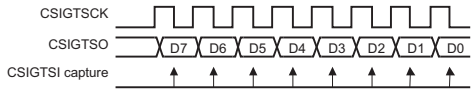
1	1	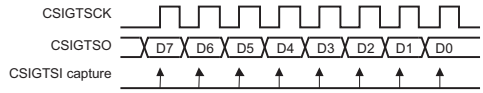

15 to 0	Reserved	When read, the value after reset is read. When writing, write the value after reset.

CAUTION

When setting this register, refer to **Table 13.22, List of Cautions when Setting Registers**.

13.3.9 CSIGnTX0W — CSIGn Transmission Register 0 for Word Access

This register stores the transmission data. This register also specifies extended data length.

Access: This register can be read/written in 32-bit units.

Address: <CSIGn_base> + 1004_H

Value after reset: $0000\ 0000_H$ This register is initialized by a reset from any source.

Bit	31	30	29	28	27	26	25	24	23	22	21	20	19	18	17	16
	—	—	CSIGn EDL	—	—	—	—	—	—	—	—	—	—	—	—	—
Value after reset	0	0	0	0	0	0	0	0	0	0	0	0	0	0	0	0
R/W	R	R	R/W	R	R	R	R	R	R	R	R	R	R	R	R	R

Bit	15	14	13	12	11	10	9	8	7	6	5	4	3	2	1	0
	CSIGnTX[15:0]															
Value after reset	0	0	0	0	0	0	0	0	0	0	0	0	0	0	0	0
R/W	R/W	R/W	R/W	R/W	R/W	R/W	R/W	R/W	R/W	R/W	R/W	R/W	R/W	R/W	R/W	R/W

Table 13.19 CSIGnTX0W Register Contents

Bit Position	Bit Name	Function
31, 30	Reserved	When read, the value after reset is read. When writing, write the value after reset.
29	CSIGnEDL	Specifies the extended data length configuration: 0: Normal operation 1: Extended data length enabled The associated data is transmitted as 16-bit data. This bit can only be set if CSIGnCTL1.CSIGnEDLE = 1.
28 to 16	Reserved	When read, the value after reset is read. When writing, write the value after reset.
15 to 0	CSIGnTX[15:0]	Data to be transmitted

CAUTION

When setting this register, refer to **Table 13.22, List of Cautions when Setting Registers**.

13.3.10 CSIGnTX0H — CSIGn Transmission Register 0 for Half Word Access

This register stores the transmission data. This register is the same as bits 15 to 0 in the CSIGnTX0W register.

The setting of 16 high-order bits in CSIGnTX0W is used for data transfer.

Access: This register can be read/written in 16-bit units.

Address: <CSIGn_base> + 1008_H

Value after reset: 0000_H This register is initialized by a reset from any source.

Bit	15	14	13	12	11	10	9	8	7	6	5	4	3	2	1	0
	CSIGnTX[15:0]															
Value after reset	0	0	0	0	0	0	0	0	0	0	0	0	0	0	0	0
R/W	R/W	R/W	R/W	R/W	R/W	R/W	R/W	R/W	R/W	R/W	R/W	R/W	R/W	R/W	R/W	R/W

Table 13.20 CSIGnTX0H Register Contents

Bit Position	Bit Name	Function
15 to 0	CSIGnTX[15:0]	Data to be transmitted

CAUTION

When setting this register, refer to **Table 13.22, List of Cautions when Setting Registers**.

13.3.11 CSIGnRX0 — CSIGn Reception Register 0

This register stores the received data.

Access: This register can only be read in 16-bit units.

Address: <CSIGn_base> + $100C_H$

Value after reset: 0000_H This register is initialized by a reset from any source.

Bit	15	14	13	12	11	10	9	8	7	6	5	4	3	2	1	0
	CSIGnRX[15:0]															
Value after reset	0	0	0	0	0	0	0	0	0	0	0	0	0	0	0	0
R/W	R	R	R	R	R	R	R	R	R	R	R	R	R	R	R	R

Table 13.21 CSIGnRX0 Register Contents

Bit Position	Bit Name	Function
15 to 0	CSIGnRX [15:0]	Received data

NOTE

This register stores the received data when an INTCSIG0IR interrupt is generated. Read the received data stored in this register before generation of an INTCSIG0IR interrupt. Otherwise the data is rewritten with the next received data.

CAUTION

When setting this register, refer to **Table 13.22, List of Cautions when Setting Registers**.

13.3.12 List of Caution

Table 13.22 List of Cautions when Setting Registers

Register Name	Bit Name	Contents
CSIGnCTL0	CSIGnPWR	If this bit is cleared during communication, ongoing communication is aborted. After communication is aborted, it is necessary to restart the communication.
CSIGnCTL0	CSIGnTXE CSIGnRXE	Do not modify any of these bits while CSIGnCTL0.CSIGnPWR = 0. (These bits can be modified at the same time as the CSIGnCTL0.CSIGnPWR bit.) Do not modify these bits while CSIGnSTR0.CSIGnTSF = 1, because the specified operation is not guaranteed if ongoing communication is aborted.
CSIGnCTL0	CSIGnMBS	Modify this bit together with the CSIGnPWR bit in CSIGnCTL0.
CSIGnCTL1	CSIGnCKR	Modification of this bit is only permitted while CSIGnCTL0.CSIGnPWR = 0.
CSIGnCTL1	CSIGnSLIT CSIGnEDLE CSIGnDCS CSIGnHSE	Modification of these bits is only permitted while CSIGnCTL0.CSIGnPWR = 0.
CSIGnCTL1	CSIGnLBM	Modification of this bit is only permitted while CSIGnCTL0.CSIGnPWR = 0. Setting of this bit is prohibited in slave mode.
CSIGnCTL1	CSIGnSIT	Modification of this bit is only permitted while CSIGnCTL0.CSIGnPWR = 0. This bit is only valid in master mode. In slave mode, no delay is generated.
CSIGnCTL2	CSIGnPRS[2:0] CSIGnBRS[11:0]	Modification of this bit is only permitted while CSIGnCTL0.CSIGnPWR = 0. Setting of the max baud rate is as follows. • Master mode: PCLK/4 • Slave mode: PCLK/6
CSIGnSTR0	CSIGnTSF	Writing to this bit is prohibited. Only reading this bit is enabled.
CSIGnSTR0	CSIGnDCE CSIGnPE CSIGnOVE	Writing to these bits is prohibited. Only reading these bits is enabled. These bits are initialized when CSIGnPWR in CSIGnCTL0 changes from 0 to 1 or from 1 to 0.
CSIGnBCTL0	CSIGnSCE	To stop the next reception, this bit must be controlled at the following times. • When CSIGnSLIT is 0, clear this bit before reception of the last of the data (reading of that data from the CSIGnRX0 register). • When CSIGnSLIT is 1, clear this bit immediately after the second last data reception (reading of that data from the CSIGnRX0 register), up to 1 cycle of the CSIGnTSCK clock before the last CSIGnTIR (reception complete) interrupt.
CSIGnCFG0	CSIGnPS[1:0] CSIGnDLS[3:0] CSIGnDIR CSIGnDAP	Modification of these bits is only permitted while CSIGnCTL0.CSIGnPWR = 0.
CSIGnTX0W	CSIGnEDL	This bit is valid only when CSIGnCTL1.CSIGnEDLE = 1.
CSIGnTX0W CSIGnTX0H		Write access to these bits are prohibited when CSIGnCTL0.CSIGnTXE = CSIGnCTL0.CSIGnRXE = 0.
CSIGnRX0		These bits are initialized when CSIGnPWR in CSIGnCTL0 changes from 0 to 1 or from 1 to 0. It is prohibited to read these bits when CSIGnCTL0.CSIGnTXE = 0 and CSIGnCTL0.CSIGnRXE = 0.

13.4 Interrupt Sources

CSIG can generate the following interrupts:

- INTCSIG0IC (Communication status interrupt)
- INTCSIG0IR (Reception status interrupt)
- INTCSIG0IRE (Communication error interrupt)

13.4.1 Interrupt Delay

In master mode, all interrupts generated by the master can be delayed by one half period of the transmission clock CSIGTSCK. This is not possible in slave mode.

The delay is specified by setting bit CSIGnCTL1.CSIGnSIT = 1. (The setting of the CSIGnSIT bit is invalid in slave mode.)

The following example illustrates the interrupt delay function, assuming a setting of CSIGnCTL1.CSIGnSIT = 1 (interrupt delay enabled), CSIGnCTL1.CSIGnCKR = 0, CSIGnCFG0.CSIGnDAP = 0 (normal clock and data phase), and CSIGnCFG0.CSIGnDLS[3:0] = 1000_B (data length 8 bits).

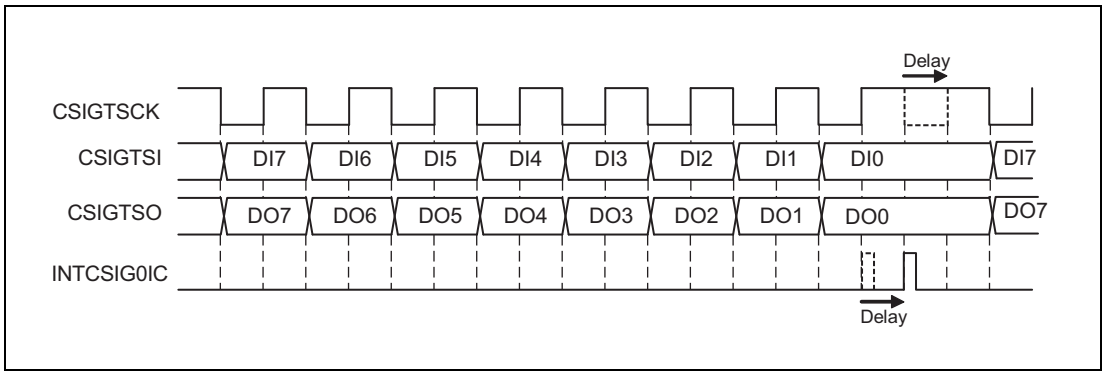

Figure 13.2 Interrupt Delay Function (CSIGnCTL1.CSIGnSIT = 1)

13.4.2 INTCSIG0IC (Communication Status Interrupt)

This interrupt is normally generated after every data transfer. It can be used to trigger a DMA for writing new transmission data to register CSIGnTX0W or CSIGnTX0H.

The following example assumes master mode and a setting of CSIGnCTL1.CSIGnSIT = 0 (no interrupt delay), CSIGnCTL1.CSIGnCKR = 0, CSIGnCFG0.CSIGnDAP = 0 (normal clock and data phase), CSIGnCFG0.CSIGnDLS[3:0] = 1000_B (data length 8 bits), and CSIGnCTL1.CSIGnSLIT = 0 (normal interrupt timing).

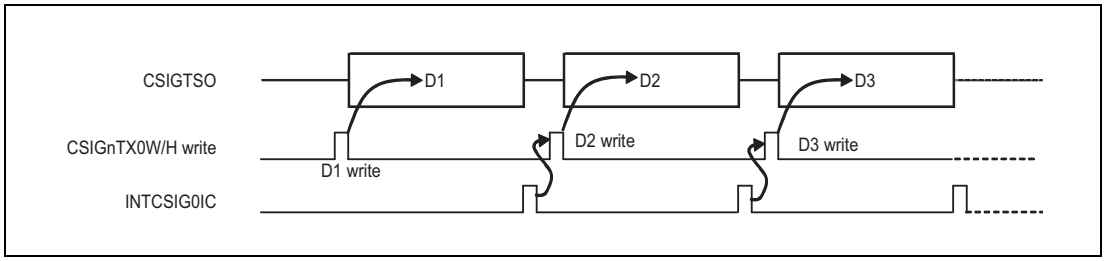

Figure 13.3 Generation of INTCSIG0IC after Communication (CSIGnCTL1.CSIGnSLIT = 0)

However, INTCSIG0IC can also be set up to occur when the CSIGnTX0W/H register is free for the next data. This is specified by setting CSIGnCTL1.CSIGnSLIT = 1.

This mode allows more efficient data transfers.

The effect is illustrated in the figure below.

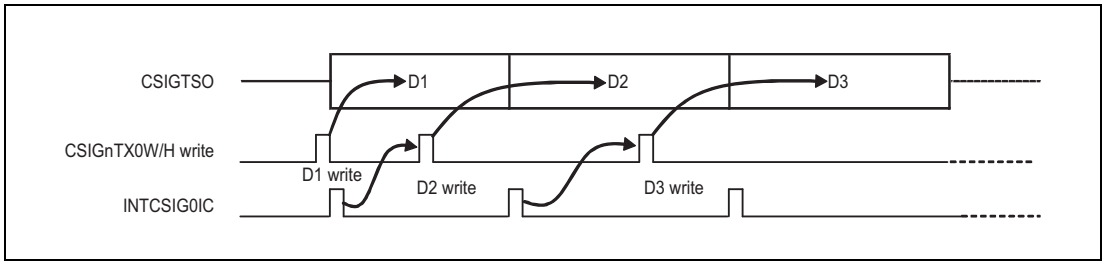

Figure 13.4 Generation of INTCSIG0IC at the Beginning of Communication

13.4.3 INTCSIG0IR (Reception Status Interrupt)

This interrupt is generated in receive-only and transmit/receive mode after data has been received and is available in the reception register. It can be used to trigger a DMA for reading the received data from register CSIGnRX0.

The following example assumes master mode and a setting of CSIGnCTL1.CSIGnSIT = 0 (no interrupt delay), CSIGnCTL1.CSIGnCKP = 0, CSIGnCFG0.CSIGnDAP = 0 (normal clock and data phase), and CSIGnCFG0.CSIGnDLS[3:0] = 1000_B (data length 8 bits).

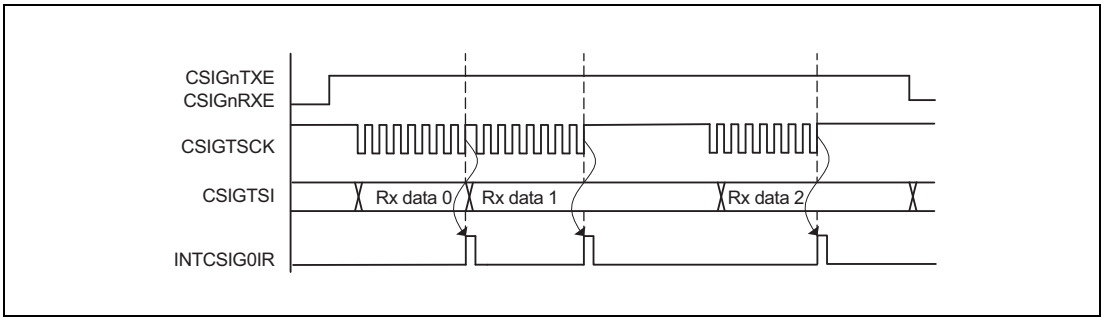

Figure 13.5 Generation of INTCSIG0IR

13.4.4 INTCSIG0IRE (Communication Error Interrupt)

This interrupt is generated whenever an error is detected.

Table 13.23 Data Error Types

Error type	Communication Status after Error Interrupt	Remarks
Parity error	Interrupt is generated and communication continues	—
Data consistency check error	Interrupt is generated and communication continues	—
Overrun error*1	When CSIGnCTL1.CSIGnHSE = 0 (handshake function disabled) in slave mode, communication continues even after an interrupt is generated.	When CSIGnCTL1.CSIGnHSE = 1 (handshake function enabled) in slave mode, communication stops due to handshake. No interrupt is generated and an overrun error does not occur.

Note 1. Overrun error does not occur in master mode. In slave mode, communication cannot be stopped.

The type of error that caused the generation of INTCSIG0IRE is indicated in register CSIGnSTR0.

For details about the various error types refer to **Section 13.5.10, Error Detection**.

13.5 Operation

13.5.1 Master/Slave Mode

CSIG operation in master mode or in slave mode depends on the setting of CSIGnCTL2.CSIGnPRS[2:0]. If master mode is selected, the source of the transmission clock must be selected too.

13.5.1.1 Master Mode

In master mode, the serial communication clock is generated by the internal baud rate generator (BRG) and provided to the slave via signal CSIGTSCK.

Master mode is enabled by setting bits CSIGnCTL2.CSIGnPRS[2:0] to anything but 111_B. In master mode, the BRG frequency setting is enabled by setting bits CSIGnCTL2. CSIGnPRS[2:0] and bits CSIGnCTL2.CSIGnBRS[11:0].

The initial level of CSIGTSCK depends on the CSIGTSCK clock inversion function bit: it is high level when CSIGnCTL1.CSIGnCKR = 0, and is low level when CSIGnCTL1.CSIGnCKR = 1.

The example below shows the communication in master mode for 8-bit data, CSIGnCTL1.CSIGnCKR = 0, CSIGnCFG0.CSIGnDAP = 0, and MSB first:

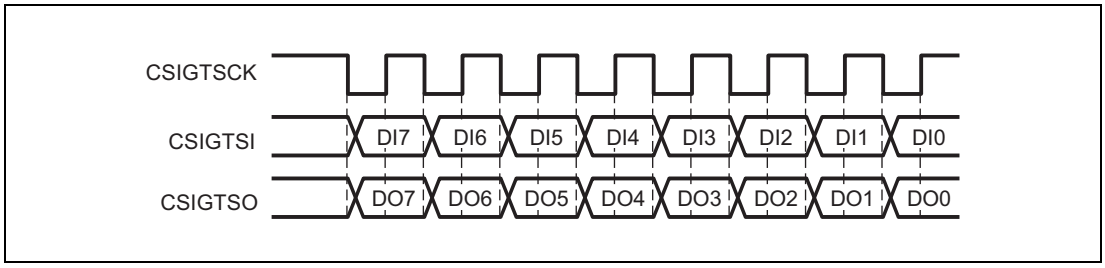

Figure 13.6 Transmit/Receive in Master Mode

13.5.1.2 Slave Mode

In slave mode, another device is the communication master. The external clock is received by signal CSIGTSCK. Send/receive operation starts as soon as a clock signal is detected.

Slave mode is selected by setting CSIGnCTL2.CSIGnPRS[2:0] to 111_B.

NOTE

When using slave mode, disable the baud rate generator (BRG) by setting the CSIGnCTL2.CSIGnBRS[11:0] bits to 000_H.

The example below shows the communication in slave mode for 8-bit data, CSIGnCTL1.CSIGnCKR = 0, CSIGnCFG0.CSIGnDAP = 0, and MSB first:

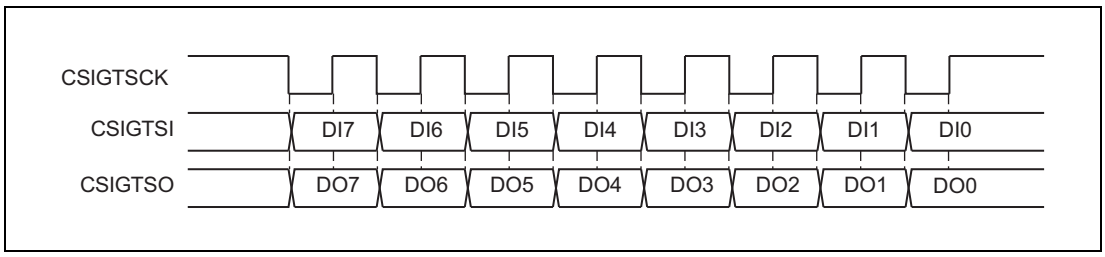

Figure 13.7 Transmit/Receive in Slave Mode

13.5.2 Master/Slave Connections

13.5.2.1 One Master and One Slave

The following figure illustrates the connections between one master and one slave.

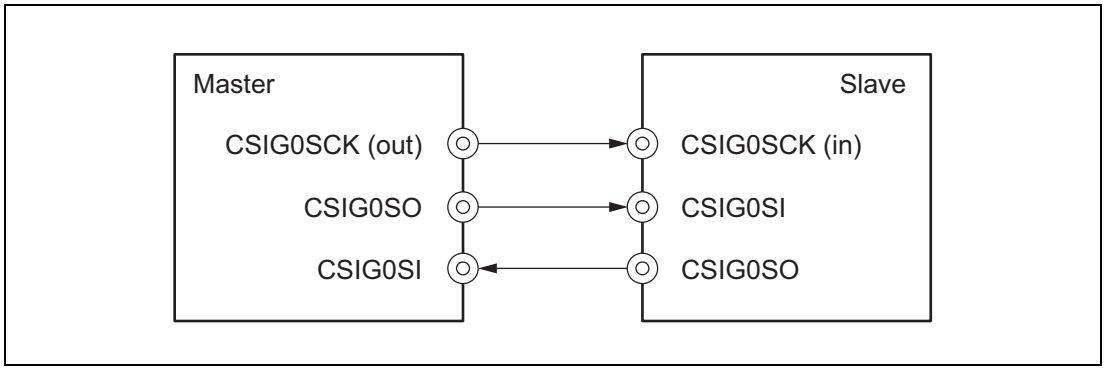

Figure 13.8 Direct Master/Slave Connection

13.5.3 Transmission Clock Selection

In master mode, the transfer clock frequency is selectable using the CSIGnPRS[2:0] and CSIGnBRS[11:0] bits in the CSIGnCTL2 register.

The following figure shows a block diagram of the BRG.

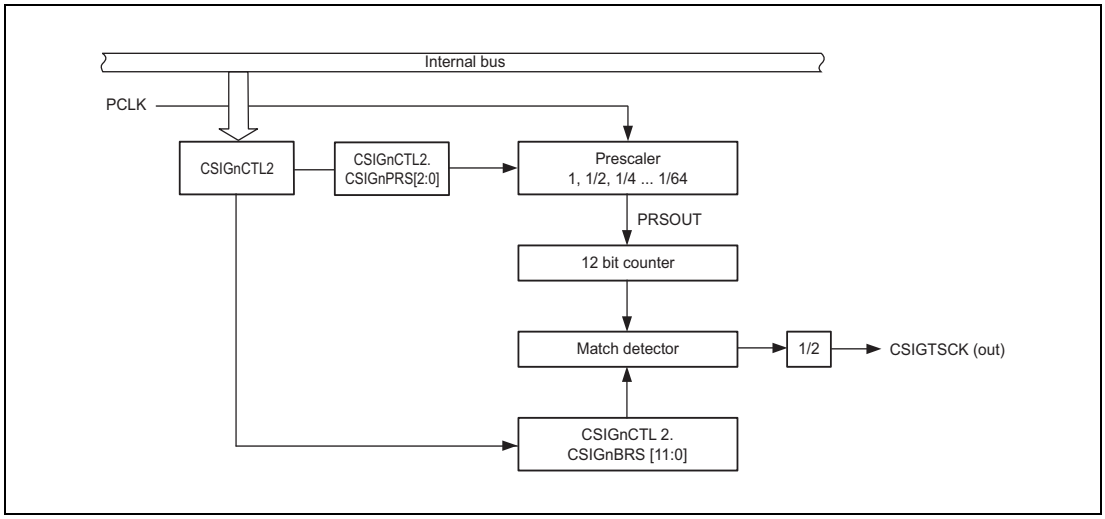

Figure 13.9 BRG Block Diagram

Clearing CSIGnCTL2.CSIGnBRS[11:0] to 000_H disables the BRG.

Calculation of transfer clock frequency

The transfer clock frequency in master mode is calculated by the following formula.

Transfer clock frequency (CSIGTSCK) = PCLK / (PCLK's division ratio) = PCLK / ($2^{\alpha} \times k \times 2$), where

α = CSIGnPRS[2:0] = 0 to 6

k = CSIGnBRS[11:0] = 1 to 4095

Upper limit and lower limit of transfer clock frequency

Note the following when setting the transfer clock frequency.

- The maximum acceptable transfer clock frequency in master mode is PCLK / 4 (up to 8 MHz).
- The maximum acceptable transfer clock frequency in slave mode is PCLK / 6 (up to 6.66 MHz). (It must be confirmed that the transfer clock frequency of the external master is within this range.)
- The minimum transfer clock frequency in both modes is PCLK / 524160.

13.5.4 Data Transfer Modes

13.5.4.1 Transmit-Only Mode

Setting CSIGnCTL0.CSIGnTXE = 1 and CSIGnCTL0.CSIGnRXE = 0 puts the CSIG in transmit-only mode. Transmission starts when transmit data is written in the CSIGnTX0W or CSIGnTX0H register.

CAUTION

In case transmit-only mode has been entered after any reception mode, the data in the CSIGnRX0 buffer becomes undefined after completion of the first transmission. Consequently the reception register CSIGnRX0 has to be read before changing to transmit-only mode.

13.5.4.2 Receive-Only Mode

Setting CSIGnCTL0.CSIGnTXE = 0 and CSIGnCTL0.CSIGnRXE = 1 puts the CSIG in receive-only mode.

In master mode, reception starts when dummy data is read from the CSIGnRX0 register.
All following receptions are triggered by a read from the receive data register CSIGnRX0, as long as CSIGnBCTL0.CSIGnSCE = 1.

Moreover, CSIGnBCTL0.CSIGnSCE has to be set to 0 before reading the last received data from CSIGnRX0.

The recommended procedure is:

1. Set CSIGnBCTL0.CSIGnSCE = 1.
2. Before starting the first receive operation, read CSIGnRX0 (dummy data).
3. Wait for the reception interrupt INTCSIG0IR.
4. Read CSIGnRX0 (received data).
   In case of further data receptions continue at 4. continue to read it until all data has been received.
   Before reading the last received data from CSIGnRX0, set CSIGnBCTL0.CSIGnSCE = 0.

In slave mode, reception starts when the communication clock CSIGTSCK from the master is received. In this case, it is not necessary to read data to the CSIGnRX0 register of the slave.

NOTE

In slave mode, any previously received data must be read from the reception register CSIGnRX0 in order to avoid any overwrite situation.

13.5.4.3 Transmit/Receive Mode

Setting CSIGnCTL0.CSIGnTXE = 1 and CSIGnCTL0.CSIGnRXE = 1 puts the CSIG in transmit/receive mode.

Data transfer (transmission and reception) starts when transmit data is written to the CSIGnTX0W or CSIGnTX0H register.

13.5.5 Data Length Selection

13.5.5.1 Data Length Selection Without Extended Length

Transmission data length is selectable from 7 to 16 bits using the CSIGnDLS[3:0] bits in the CSIGnCFG0 register. The examples below show the communication with MSB first (CSIGnCFG0.CSIGnDIR = 0):

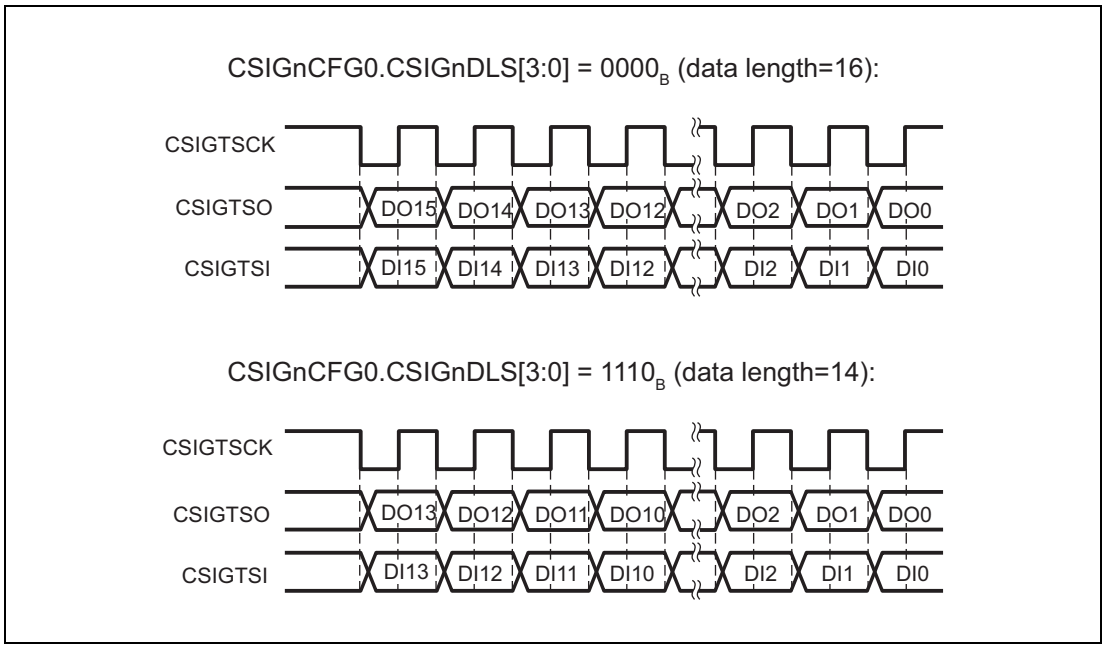

Figure 13.10 Data Length Select Function

13.5.5.2 Data Length Selection with Extended Data Length

If the data to be sent/received exceeds 16 bits, the extended data length (EDL) feature can be used.

The EDL function is enabled by setting bit CSIGnCTL1.CSIGnEDLE to 1.

The EDL function works as follows:

- The data must be divided into 16-bit blocks and remainder. For example, 42-bit data is divided into two 16-bit blocks and 10 bits.
- The remainder bit length is set for CSIGnCFG0.CSIGnDLS[3:0] bits as “data length.”
- CSIGnTX0W.CSIGnEDL must be set to 1 to transmit 16-bit blocks. In this case, the data written to CSIGnTX0W is sent as a 16-bit data length regardless of the CSIGnCFG0.CSIGnDLS[3:0] bits.
- The transfer is complete after the data with the specified data length (the remainder with CSIGnTX0W.CSIGnEDL = 0) has been sent.

Example

Example for sending 40-bit data, for example the string $123456789A_H$:

40 bits are split into 2 × 16 bits plus 8 bits.

- Initialize CSIGnCFG0.CSIGnDLS[3:0] = 8_D.
- To send $123456789A_H$ with MSB first, write the following sequence to CSIGnTX0W.
  - $2000\ 1234_H$ (CSIGnTX0W.CSIGnEDL = 1)
  - $2000\ 5678_H$ (CSIGnTX0W.CSIGnEDL = 1)
  - $0000\ 009A_H$ (CSIGnTX0W.CSIGnEDL = 0)

The following figure illustrates the timing.

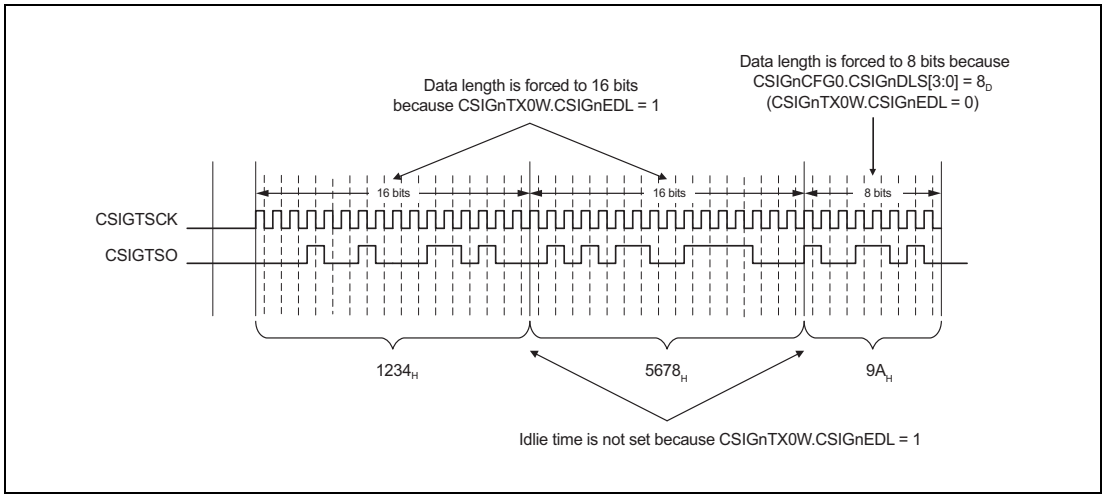

Figure 13.11 EDL Timing Diagram

NOTES

1. A data length of less than 7 bits can be set only when EDL mode is used.
2. It is not possible to transmit two consecutive data with a data length of less than 7 bits.
3. If parity is enabled, the parity bit is added after the last bit.
4. The following describes data direction using an example below.
   - Transmit data: 123456_H
   - MSB first:
     Set CSIGnCFG0.CSIGnDIR to 0.
     Write CSIGnTX0W = $2000\ 1234_H$. (EDL bit = 1)
     Write CSIGnTX0W = $0000\ 0056_H$. (EDL bit = 0)
   - LSB first:
     Set CSIGnCFG0.CSIGnDIR to 1.
     Write CSIGnTX0W = $2000\ 3456_H$. (EDL bit = 1)
     Write CSIGnTX0W = $0000\ 0012_H$. (EDL bit = 0)
5. EDL mode is not available in receive-only mode of slave mode.
   (CSIGnCTL2.CSIGnPRS[2:0] = 111_B, CSIGnCTL0.CSIGnTXE = 0, CSIGnCTL0.CSIGnRXE = 1)

13.5.6 Serial Data Direction Select Function

The serial data direction is selectable using the CSIGnDIR bit in the CSIGnCFG0 register. The examples below show the communication for 8-bit data (CSIGnCFG0.CSIGnDLS[3:0] = 1000_B):

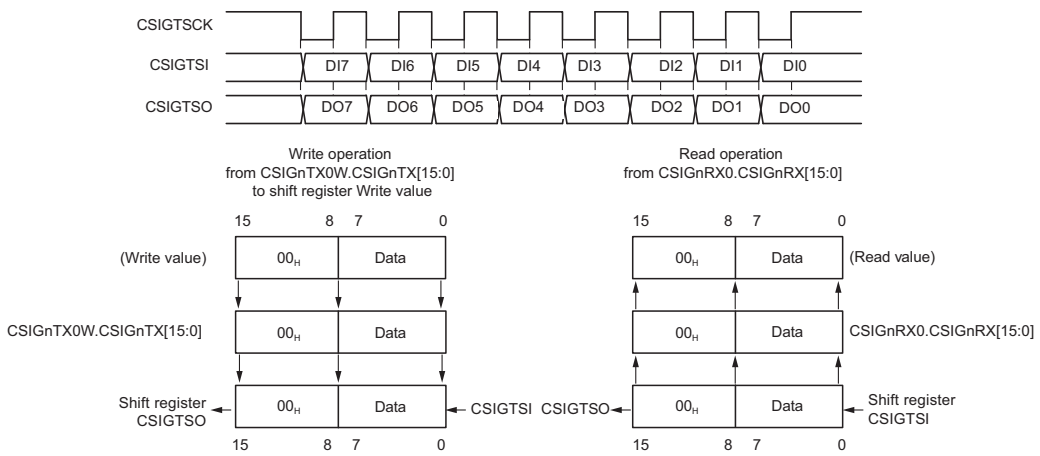

Figure 13.12 Serial Data Direction Select Function — MSB First (CSIGnDIR = 0)

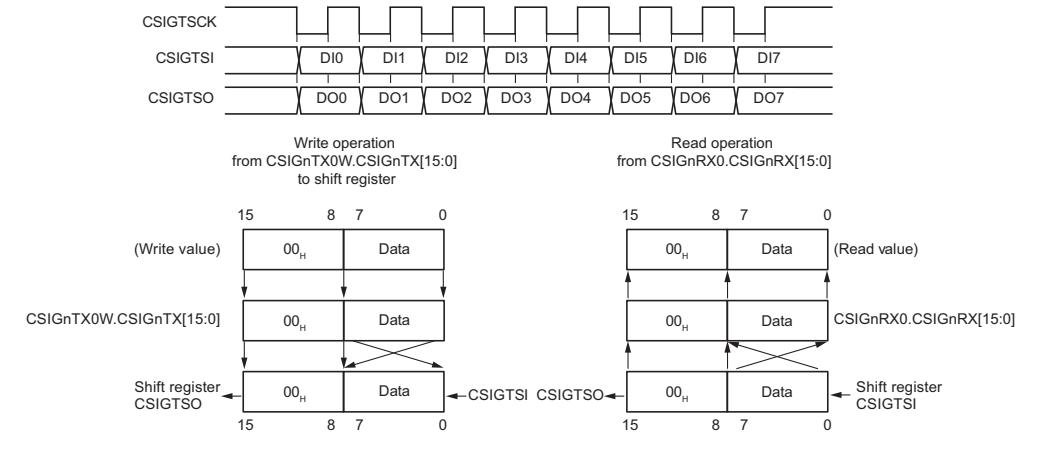

Figure 13.13 Serial Data Direction Select Function — LSB First (CSIGnDIR = 1)

13.5.7 Communication Timing in Slave Mode

The following figure illustrates the communication signals and timings in slave mode.

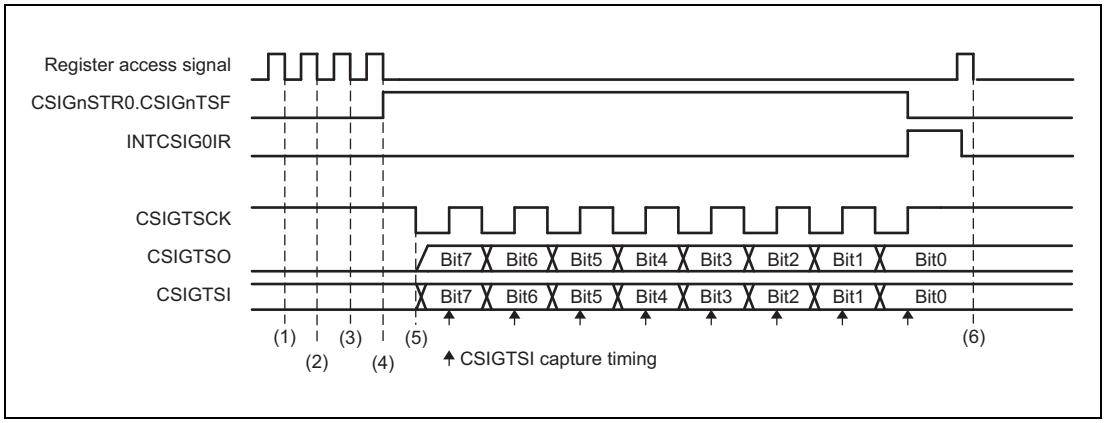

Figure 13.14 Transmit/Receive Communication Timing in Slave Mode

1. CSIG is put into slave mode (Set CSIGnCTL2.CSIGnPRS[2:0] to 111_B)
2. The data length is 8 bits (CSIGnCFG0.CSIGnDLS[3:0] = 1000_B)
   The data direction is MSB first (CSIGnCFG0.CSIGnDIR = 0)
3. CSIG is set to transmit/receive mode (CSIGnCTL0.CSIGnPWR = 1, CSIGnCTL0.CSIGnTXE = 1, CSIGnCTL0.CSIGnRXE = 1)
4. When transfer data is written to the CSIGnTX0W transmission register or CSIGnTX0H register, the transfer status flag CSIGnSTR0.CSIGnTSF is automatically set.
5. When external clock signal is detected as CSIGTSCK signal, the slave immediately transmits the data to CISGTSO and, at the same time, captures the data transmitted from CSIGTSI.
6. The CSIGnRX0 register can be read.

13.5.8 Handshake Function

CSIG features a handshake function to synchronize the master and the slave devices. This function can be enabled/disabled by bit CSIGnCTL1.CSIGnHSE. For handshake, the CSIGTRYI and CSIGTRYO signals are used.

The timing depends on the data phase selection bit CSIGnCFG0.CSIGnDAP.

13.5.8.1 Slave Mode

When CSIGnCTL1.CSIGnHSE = 1 and the slave is busy, a low-level CSIGTSHSG signal is output. This happens when previous receive data is still in the CSIGnRX0 register, and new data cannot be copied from the shift register to CSIGnRX0 (CSIGnRX0 full condition).

The following examples assume a data length of 8 bits.

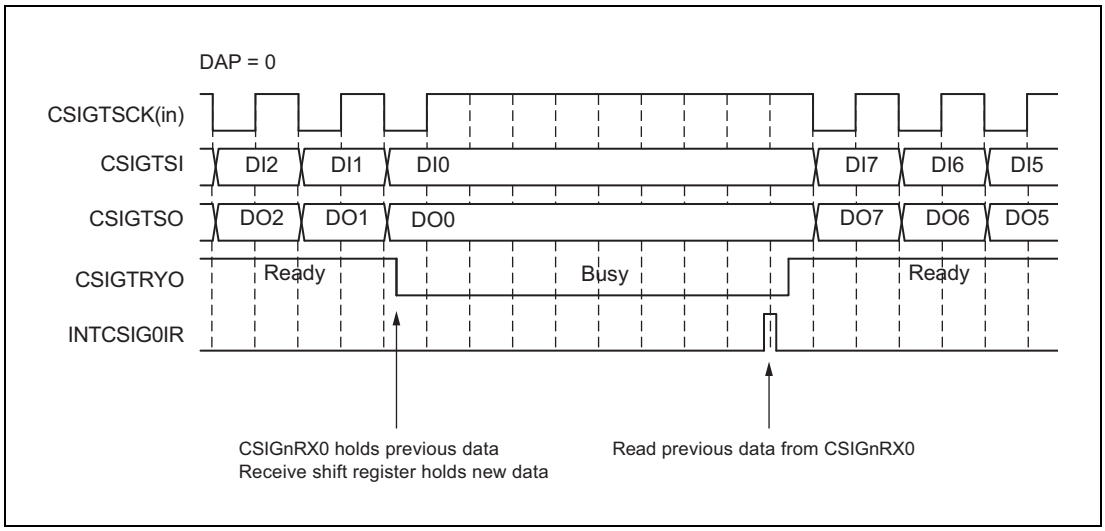

Figure 13.15 Ready/Busy Signal from Slave (CSIGnCFG0.CSIGnDAP = 0)

As long as the slave is busy, the master has to wait (i.e. suspend the transmission clock). The slave sets CSIGTRYO to high ("ready") as soon as the reception register CSIGnRX0 has been read.

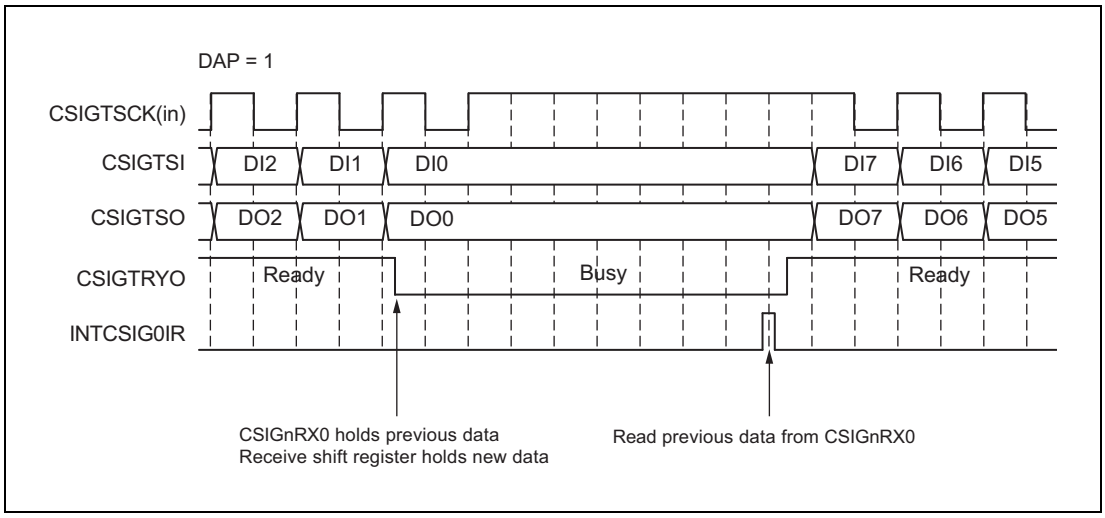

Figure 13.16 Ready/Busy Signal from Slave (CSIGnCFG0.CSIGnDAP = 1)

13.5.8.2 Master Mode

When the master detects low level of the CSIGTRYI while CSIGnCTL1.CSIGnHSE is 1, the following transfer is put on hold, and the master goes into wait status. It suspends the clock at CSIGTSCK.

The CSIGTRYI level is checked at each half clock cycle of CSIGTSCK.

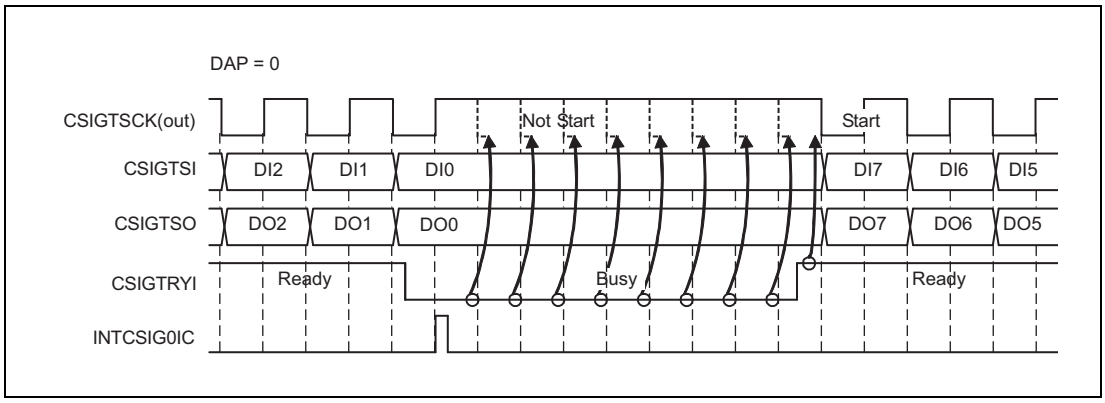

Figure 13.17 Master's Reaction to CSIGTRYI (CSIGnCFG0.CSIGnDAP = 0)

If the CSIGTRYI low signal comes from the slave while data transfer is in progress, the serial clock is suspended after the transfer is complete.

The master resumes the communication as soon as CSIGTRYI becomes high (slave is "ready").

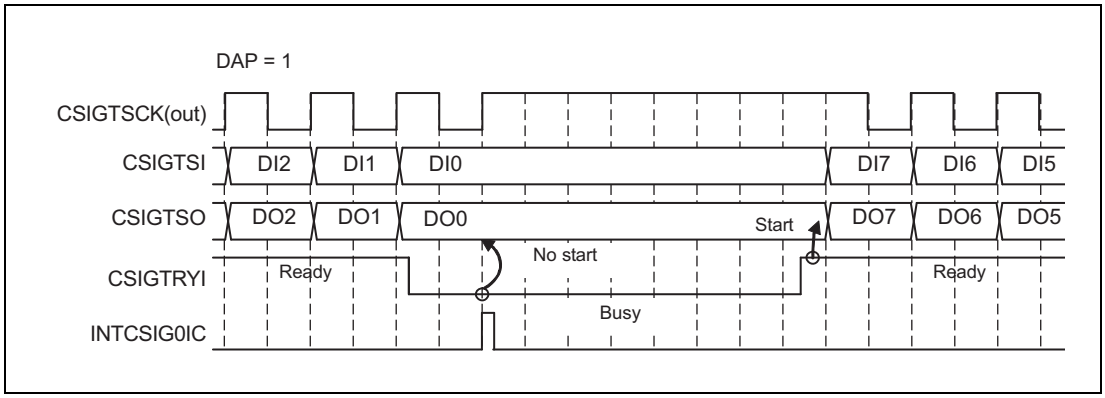

Figure 13.18 Master's Reaction to CSIGTRYI (CSIGnCFG0.CSIGnDAP = 1)

CAUTION

If multiple slaves are connected, the master must only detect the CSIGTRYI signal of the slave it has selected for communication.

CSIGTRYI must be pulled down by the slave before the next transfer starts. Even if the signal is pulled down by the slave during the transfer, the transfer will continue until it is finished.

13.5.9 Loop-Back Mode

Loop-back mode is a special mode for self-test. This feature is only available in master mode.

When this mode is active (CSIGnCTL1.CSIGnLBM = 1), the transmit and receive signals are internally connected, as shown in the figures below. The signals CSIGTSCK, CSIGTSO, and CSIGTSI are disconnected from the ports. In addition, the CSIGTSO output level is fixed to low, and CSIGTSCK is set to the reset level (high). The rest of CSIG works as in normal operation.

In order to test the CSIG, set operating mode to loop-back mode and carry out normal transfer operations.

Table 13.24 Output Level of Pins

Pin Name	Output Level
CSIGTSCK (out)	High level
CSIGTSO	Low level (independent of the last value)
Interrupt	Normal function
CSIGTRYO	Normal function (low level)

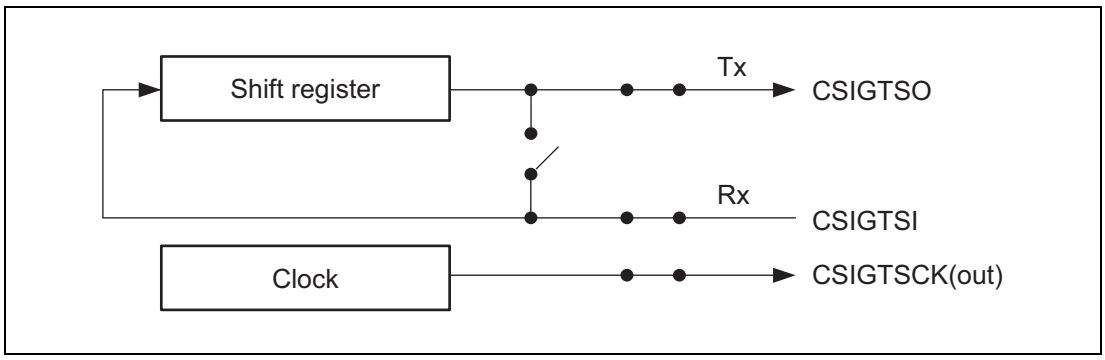

Figure 13.19 Normal Operation

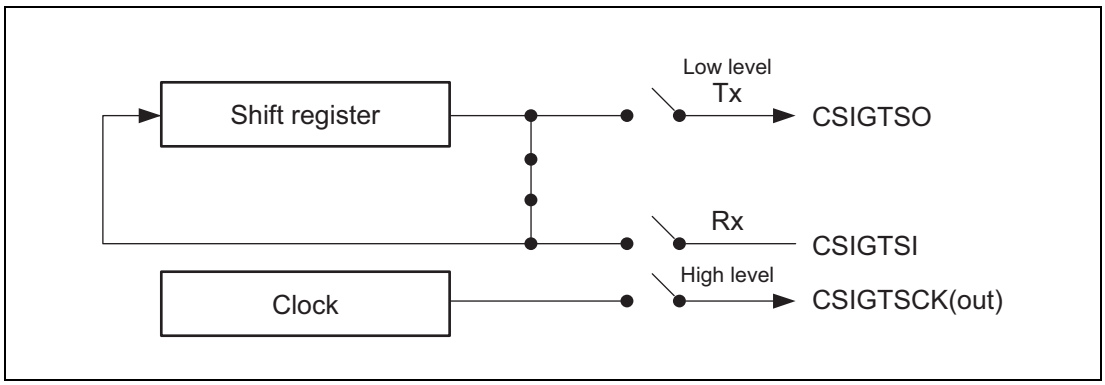

Figure 13.20 Operation in Loop-Back Mode

13.5.10 Error Detection

CSIG can detect three error types:

- Data consistency check error (transmission data)
- Parity error (reception data)
- Overrun error (reception data)

The data consistency check error/parity error check function can be individually enabled or disabled.

If one of these errors is detected, the interrupt INTCSIG0IRE is generated.

13.5.10.1 Data Consistency Check

The purpose of the data consistency check is to ensure that the data physically sent to the output pin is identical to the original data that was copied to the shift register.

The data consistency check can be enabled/disabled by bit CSIGnCTL1.CSIGnDCS. (When executing a data consistency check, always set CSIGTSO to PIPCn.PIPCn_m = 1). It is not active if data transmission is disabled (CSIGnCTL0.CSIGnTXE = 0).

When the data consistency check is active, the data transferred from CSIGnTX0W or CSIGnTX0H to the shift register is copied to a separate register. In addition, the physical levels at CSIGTSO are capture and the logical interpretation is written to an own shift register.

After completion of the transmission, the data sent is compared with the original transmission data.

Mismatch is considered as a data consistency check error:

- Interrupt INTCSIG0IRE is generated.
- Bit CSIGnSTR0.CSIGnDCE is set.

The function is illustrated in the following block diagram.

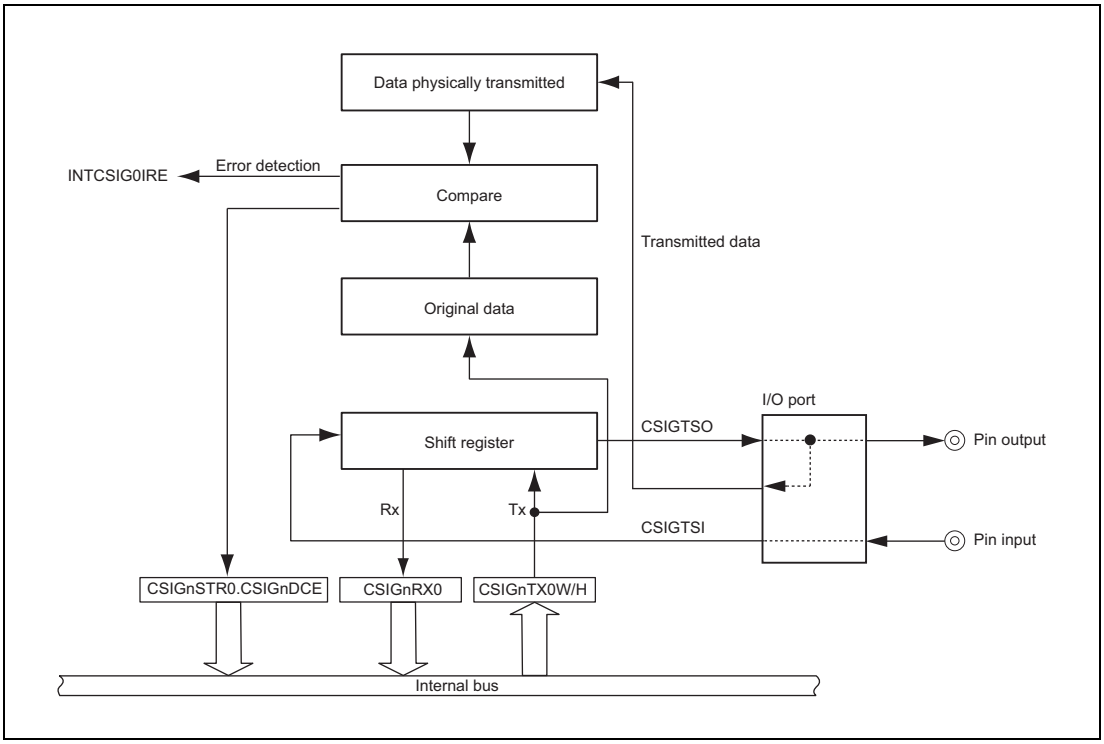

Figure 13.21 Functional Block Diagram of the Data Consistency Check

13.5.10.2 Parity Check

Parity is a common mean to detect a single bit failure during data transmission. CSIG can append a parity bit to the last data bit (even if extended data length is used).

The use and type of parity is specified in CSIGnCFG0.CSIGnPS[1:0].

Parity check is enabled if CSIGnCFG0.CSIGnPS[1] = 1.

The parity bit is checked after reception is complete. If a parity error occurs:

- Interrupt INTCSIG0IRE is generated
- Bit CSIGnSTR0.CSIGnPE is set

The following figure shows an example.

Data length is 8 bits. The data transmitted is 05_H and 35_H. Parity type is odd.

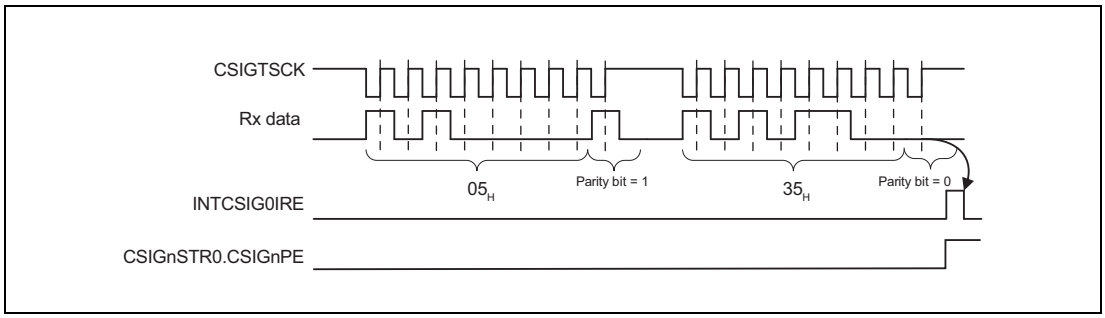

Figure 13.22 Parity Check Example

For the first 8 bits, the parity bit is 1. There is no parity error, because the total number of ones (including the parity bit) is odd.

For the second 8 bits, the parity bit is 0. This is detected as a parity error, because the total number of ones (including the parity bit) is even.

When the extended data length (EDL) function is used, a parity bit is added after the last bit of the data.

13.5.10.3 Overrun Error

This error occurs when previously received data still resides in the reception register CSIGnRX0, because it wasn't read, and new data is received.

The overrun error is not generated if data reception is disabled (CSIGnCTL0.CSIGnRXE = 0).

If an overrun error occurs:

- Interrupt INTCSIG0IRE is generated.
- Bit CSIGnSTR0.CSIGnOVE is set.
- Receive data is overwritten and communication continues.

The following figure illustrates the function.

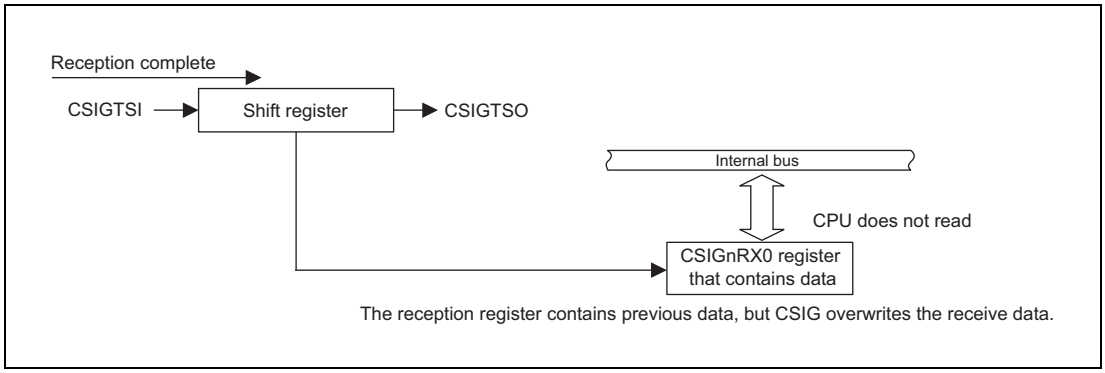

Figure 13.23 Overrun Error Detection

The following figure illustrates an example where:

- Rx data 3 was not read
- Rx data 4 is received and data is overwritten.

Thus an overrun error occurs.

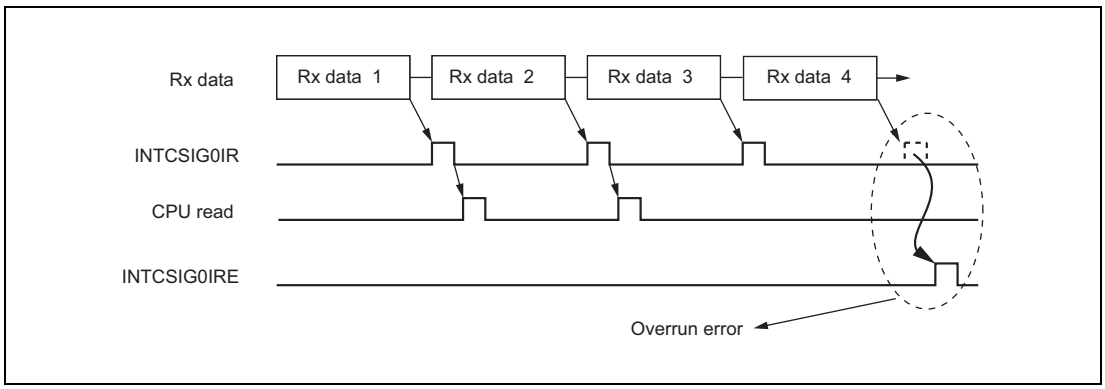

Figure 13.24 Overrun Error Detection - Example

NOTE

An Rx data overrun error can be avoided by using the handshake.

When handshake is used in slave mode, the receiver (slave) signals to the transmitter (master) that it is busy. The transmitter then waits until the receiver has read its reception register and is ready again.

For details see **Section 13.5.8, Handshake Function**.

13.6 Operating Procedure

13.6.1 Transmission/Reception by DMA in Master Mode

In the following a transmit/receive example in master mode in combination with a DMA is described.

The following instructions are based on the assumption that:

- Transmission data length is 8 bits (CSIGnCFG0.CSIGnDLS[3:0] = 1000_B)
- MSB is transmitted first (CSIGnCFG0.CSIGnDIR = 0)
- INTCSIG0IC interrupt at the end of the transfer (CSIGnCTL1.CSIGnSLIT = 0)
- Normal clock and data phase (CSIGnCTL1.CSIGnCKR = 0, CSIGnCFG0.CSIGnDAP = 0)
- The number of data is 10 (0 to 9)

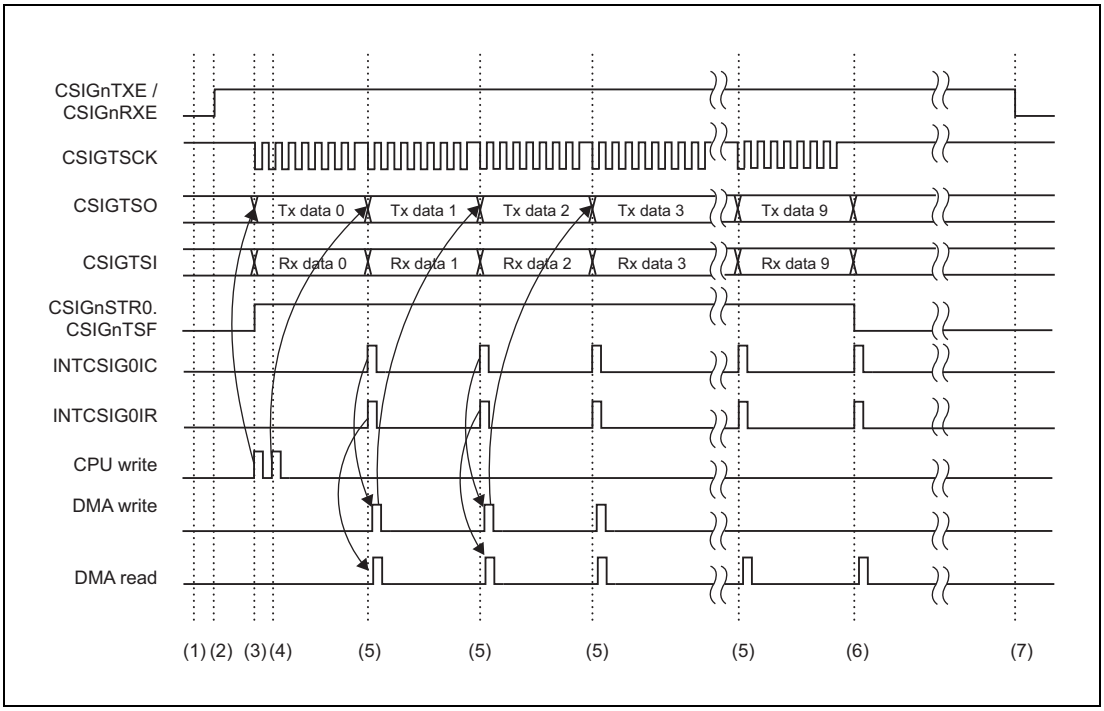

Figure 13.25 Communication in Master Mode

Procedure:

1. Set the communication protocol in the CSIGnCFG0 register. Specify interrupt timing, operating mode, etc. by setting corresponding bits in the CSIGnCTL1 register and the CSIGnCTL2 register.
2. In the CSIGnCTL0 register, set CSIGnPWR = 1 (enable the clock), CSIGnTXE = 1 (enable transmission), and CSIGnRXE = 1 (enable reception).
3. Write the first transmit data to be sent to the transmission register CSIGnTX0H. Transmission starts automatically when the first data becomes available.
4. Write the second data to CSIGnTX0H. Writing the second data immediately after the first one avoids unnecessary delays between the data.
5. Each time one data block has been transmitted or received, interrupt INTCSIG0IC or INTCSIG0IR is generated. INTCSIG0IC indicates that the next data can be written to CSIGnTX0H.

6. No more write action is required after completion of transmission of data 8. Data 9 (the last data) has been written after transmission of data 7.
   However, the reception register CSIGnRX0 must be read after data 8 and data 9 have been received.
7. To finally disable the transmit/receive operation, clear CSIGnCTL0.CSIGnTXE and CSIGnCTL0.CSIGnRXE. When no communication is taking place, set CSIGnCTL0.CSIGnPWR to “0” to minimize the power consumption of the CSIGn.

Section 14 Clocked Serial Interface H (CSIH)

This section contains a generic description of the Clocked Serial Interface H (CSIH).

The first part of this section describes all RH850/P1x specific properties, such as the number of units, register base addresses, etc. The remainder of the section describes the functions and registers of CSIH.

14.1 Features of RH850/P1x CSIH

14.1.1 Number of Units

This microcontroller has the following number of CSIH units.

Each CSIH unit has one channel interface.

Table 14.1 Number of Units

Product Name	RH850/P1x 100 pins	RH850/P1x 144 pins
Number of Units	4	
Name	CSIHn (n = 0 to 3)	

Table 14.2 CSIH Unit Configurations and Channels

Unit Name (Channel Name) CSIHn	Channels per Unit	RH850/P1x 100 pins (4 ch)	RH850/P1x 144 pins (4 ch)
CSIH0	1	√	
CSIH1	1	√	
CSIH2	1	√	
CSIH3	1	√	

Note: The channel names are same as those of the corresponding units.

The following table lists the values indicated by the index of each product.

Table 14.3 Index

Index	Meaning
n	Throughout this section, the individual CSIH units are identified by the index “n” (n = 0 to 3): for example, CSIHnCTL0 is the CSIHn control register0.
x	CSIHn has up to 8 chip select signals. Throughout this section, the individual chip select signals are identified by the index “x”: that is, CSx denotes a specified chip select signal. For the index “x”, refer to **Table 14.4, Number of Chip Select Signals**.
y	A variable used for explanation is identified by the index “y” (y=0 to 3): for example, CSIHnBRSy is a specified baud rate setting register of CSIHn.

The numbers of chip select signals for each of the CSIH units are is listed in the following table.

Table 14.4 Number of Chip Select Signals

Unit Name	Chip Select Index	
	100 pins	144 pins
CSIH0	CSx (x = 0 to 7)	CSx (x = 0 to 7)
CSIH1	CSx (x = 0 to 3)	CSx (x = 0 to 7)
CSIH2	CSx (x = 0 to 7)	CSx (x = 0 to 7)
CSIH3	CSx (x = 0 to 7)	CSx (x = 0 to 7)

14.1.2 Register Base Address

CSIH base addresses are listed in the following table.

CSIH register addresses are given as offsets from the base addresses in general.

Table 14.5 Register Base Address

Base Address Name	Base Address
<CSIH0_base>	$FFD8\ 0000_H$
<CSIH1_base>	$FFD8\ 2000_H$
<CSIH2_base>	$FFD8\ 4000_H$
<CSIH3_base>	$FFD8\ 6000_H$

14.1.3 Clock Supply

Clock supply by and to CSIH is listed in the following table.

Table 14.6 Clock Supply

Unit Name	Clock for the Unit	Supply Clock Name
CSIHn	PCLK	High-speed peripheral clock CLK_HSB

14.1.4 Interrupt Requests

CSIH interrupt requests are listed in the following table.

Table 14.7 Interrupt Requests

Unit Interrupt Name	Outline	Interrupt Number	DMA/DTS Trigger Number
CSIH0			
INTCSIH0IRE	CSIH0 communication error interrupt	82	—
INTCSIH0IR0S	CSIH0 receive status/ CS0 receive status interrupt	83	65
INTCSIH0IC0S	CSIH0 communication status/ CS0 communication status interrupt	84	66
INTCSIH0IR1	CSIH0 CS1 receive status interrupt	85	67
INTCSIH0IC1	CSIH0 CS1 communication status interrupt	86	68
INTCSIH0IR2	CSIH0 CS2 receive status interrupt	87	69
INTCSIH0IC2	CSIH0 CS2 communication status interrupt	88	70
INTCSIH0IJC	CSIH0 JOB completion interrupt	89	71
CSIH1			
INTCSIH1IRE	CSIH1 communication error interrupt	90	—
INTCSIH1IR0S	CSIH1 receive status/CS0 receive status interrupt	91	72
INTCSIH1IC0S	CSIH1 communication status/CS0 communication status interrupt	92	73
INTCSIH1IR1	CSIH1 CS1 receive status interrupt	93	74
INTCSIH1IC1	CSIH1 CS1 communication status interrupt	94	75
INTCSIH1IR2	CSIH1 CS2 receive status interrupt	95	76
INTCSIH1IC2	CSIH1 CS2 communication status interrupt	96	77
INTCSIH1IJC	CSIH1 JOB completion interrupt	97	78
CSIH2			
INTCSIH2IRE	CSIH2 communication error interrupt	98	—
INTCSIH2IR	CSIH2 receive status interrupt	99	79
INTCSIH2IC	CSIH2 communication status interrupt	100	80
INTCSIH2IJC	CSIH2 JOB completion interrupt	101	81
CSIH3			
INTCSIH3IRE	CSIH3 communication error interrupt	102	—
INTCSIH3IR	CSIH3 receive status interrupt	103	82
INTCSIH3IC	CSIH3 communication status interrupt	104	83
INTCSIH3IJC	CSIH3 JOB completion interrupt	105	84

14.1.5 Reset Sources

CSIH reset sources are listed in the following table. CSIH is initialized by these reset sources.

Table 14.8 Reset Sources

Unit Name	Reset Source
CSIHn	Reset controller SYSRES

14.1.6 External Input/Output Signals

External input/output signals of CSIH are listed below.

Table 14.9 External Input/Output Signals

Unit Signal Name	Outline	Alternative Port Pin Signal
CSIH0		
CSIHTSCK	Serial clock signal input	CSIH0SCI
	Serial clock signal output	CSIH0SCO
CSIHTSI	Serial data input signal	CSIH0SI
$\overline{\text{CSIHTSSI}}$	Slave select input signal	$\overline{\text{CSIH0SSI}}$
CSIHTRYI	Ready/busy input signal	CSIH0RYI
CSIHTSO	Serial data output signal	CSIH0SO
CSIHTRYO	Ready/busy output signal	CSIH0RYO
CSIHTCSS[7:0]*1	Chip select signal	CSIH0CSS[7:0]*1
CSIH1		
CSIHTSCK	Serial clock signal input	CSIH1SCI
	Serial clock signal output	CSIH1SCO
CSIHTSI	Serial data input signal	CSIH1SI
$\overline{\text{CSIHTSSI}}$	Slave select input signal	$\overline{\text{CSIH1SSI}}$
CSIHTRYI	Ready/busy input signal	CSIH1RYI
CSIHTSO	Serial data output signal	CSIH1SO
CSIHTRYO	Ready/busy output signal	CSIH1RYO
CSIHTCSS[7.0]*1	Chip select signal	CSIH1CSS[7.0]*1
CSIH2		
CSIHTSCK	Serial clock signal input	CSIH2SCI
	Serial clock signal output	CSIH2SCO
CSIHTSI	Serial data input signal	CSIH2SI
$\overline{\text{CSIHTSSI}}$	Slave select input signal	$\overline{\text{CSIH2SSI}}$
CSIHTRYI	Ready/busy input signal	CSIH2RYI
CSIHTSO	Serial data output signal	CSIH2SO
CSIHTRYO	Ready/busy output signal	CSIH2RYO
CSIHTCSS[7.0]*1	Chip select signal	CSIH2CSS[7.0]*1
CSIH3		
CSIHTSCK	Serial clock signal input	CSIH3SCI
	Serial clock signal output	CSIH3SCO
CSIHTSI	Serial data input signal	CSIH3SI
$\overline{\text{CSIHTSSI}}$	Slave select input signal	$\overline{\text{CSIH3SSI}}$
CSIHTRYI	Ready/busy input signal	CSIH3RYI
CSIHTSO	Serial data output signal	CSIH3SO
CSIHTRYO	Ready/busy output signal	CSIH3RYO
CSIHTCSS[7:0]*1	Chip select signal	CSIH3CSS[7:0]*1

Note 1. For the number of chip select signals, refer to **Table 14.4, Number of Chip Select Signals**.

14.1.7 Data Consistency Check

The following table lists the port pins on which CSIHnSO pin functions are multiplexed and whether or not the CSIHnSO pin functions support data consistency checking. Refer to **Section 14.5.12, Error Detection** for details on data consistency checking.

Table 14.10 Data Consistency Checking and Port Pins

Unit Signal Name	Port Pin Name	Alternative Function	Data Consistency Checking
CSIH0			
CSIHTSO	P2_5	ALT-OUT6	Supported
	P2_12*[1]	ALT-OUT6	Supported
	P3_0*[1]	ALT-OUT5	Supported
	P3_7	ALT-OUT1	Supported
CSIH1			
CSIHTSO	P2_8	ALT-OUT3	Supported
	P4_0	ALT-OUT1	Supported
CSIH2			
CSIHTSO	P1_3	ALT-OUT4	Supported
	P2_1	ALT-OUT2	Supported
	P4_5	ALT-OUT1	Supported
CSIH3			
CSIHTSO	P1_3	ALT-OUT6	Supported
	P2_5	ALT-OUT4	Supported

Note 1. Available for 144-pin devices.

14.1.8 Combinations of Pins and Ports

Combinations of CSIH pins and ports are listed in the following table.

Table 14.11 Combinations of pins and ports (1/2)

Function	Pin Name	Port Name			
		Group 1	Group 2	Group 3	Group 4
CSIH0	CSIH0CSS0	P3_12			
	CSIH0CSS1	P3_13			
	CSIH0CSS2	P2_4 / P2_14*1			
	CSIH0CSS3	P2_5 / P2_13*1			
	CSIH0CSS4	P2_6 / P2_12*1			
	CSIH0CSS5	P2_2 / P2_7 / P2_11*1			
	CSIH0CSS6	P2_8 / P2_10*1			
	CSIH0CSS7	P2_9 / P3_2*1			
	$\overline{\text{CSIH0SSI}}$	P3_8			
	CSIH0RYI	P2_10*1 / P2_15*1 / P3_3 / P3_9			
	CSIH0RYO	P2_11*1			
	CSIH0SCI/ CSIH0SCO	P2_6	P3_8	P3_1*1	P3_1*1
	CSIH0SI	P2_4	P3_6	P3_2*1	P3_6
	CSIH0SO	P2_5	P3_7	P3_0*1	P2_12*1
CSIH1	CSIH1CSS0	P4_3		—	—
	CSIH1CSS1	P4_4		—	—
	CSIH1CSS2	P4_5		—	—
	CSIH1CSS3	P4_6		—	—
	CSIH1CSS4	P4_7*1		—	—
	CSIH1CSS5	P4_8*1		—	—
	CSIH1CSS6	P4_9*1		—	—
	CSIH1CSS7	P4_10*1		—	—
	$\overline{\text{CSIH1SSI}}$	P4_8*1		—	—
	CSIH1RYI	P2_11*1 / P3_13 / P4_9*1		—	—
	CSIH1RYO	P2_13 *1/ P3_12 / P4_2 / P4_10*1		—	—
	CSIH1SCI/ CSIH1SCO	P2_9	P4_1	—	—
	CSIH1SI	P2_7	P3_14	—	—
	CSIH1SO	P2_8	P4_0	—	—

Table 14.11 Combinations of pins and ports (2/2)

Function	Pin Name	Port Name			
		Group 1	Group 2	Group 3	Group 4
CSIH2	CSIH2CSS0	P1_1 / P2_3 / P4_7*1			—
	CSIH2CSS1	P3_3 / P4_8*1 / P5_0			—
	CSIH2CSS2	P3_4 / P4_9*1 / P5_1			—
	CSIH2CSS3	P3_5 / P4_10*1 / P5_4			—
	CSIH2CSS4	P3_6 / P4_11*1 / P5_5			—
	CSIH2CSS5	P3_7 / P4_12*1 / P5_6			—
	CSIH2CSS6	P3_8 / P4_14*1 / P5_7			—
	CSIH2CSS7	P3_9 / P4_4 / P5_8			—
	$\overline{\text{CSIH2SSI}}$	P4_13*1			—
	CSIH2RYI	P2_3 / P3_7 / P4_3			—
	CSIH2RYO	P2_4 / P4_7*1			—
	CSIH2SCI/ CSIH2SCO	P1_4	P2_2	P4_6	—
	CSIH2SI	P1_2	P2_0	P4_4	—
	CSIH2SO	P1_3	P2_1	P4_5	—
CSIH3	CSIH3CSS0	P2_8		—	—
	CSIH3CSS1	P2_9		—	—
	CSIH3CSS2	P3_5		—	—
	CSIH3CSS3	P3_4		—	—
	CSIH3CSS4	P3_3		—	—
	CSIH3CSS5	P3_9		—	—
	CSIH3CSS6	P2_0		—	—
	CSIH3CSS7	P2_1		—	—
	$\overline{\text{CSIH3SSI}}$	P3_3		—	—
	CSIH3RYI	P1_1 / P2_8 / P3_6		—	—
	CSIH3RYO	P1_0 *1/ P2_8		—	—
	CSIH3SCI/ CSIH3SCO	P1_4	P2_7	—	—
	CSIH3SI	P1_2	P2_6	—	—
	CSIH3SO	P1_3	P2_5	—	—

Note 1. Available in devices with 144-pin.

14.2 Overview

14.2.1 Functional Overview

- Three-wire serial synchronous data transfer
- Master mode and slave mode selectable
- Supports multiple slaves configuration plus RCB (Recessive Configuration for Broadcasting) thanks to eight configurable chip select output signals
- Slave select input signal ($\overline{\text{CSIHTSSI}}$) is available.
- Four built-in baud rate generator
- Transfer clock frequency is adjustable in master mode, and in slave mode, it is determined by input clock.
- Maximum transfer clock frequency:
  - in master mode: 10 MHz
  - in slave mode: 6.66 MHz
- Phase of clock and data selectable
- Data transfer with MSB or LSB first selectable
- Transfer data length selectable from 2 to 16 bits in 1-bit units
- Provided with on-chip EDL (Extended Data Length) function for transferring data with more than 16 bits.
- Three selectable transfer modes:
  - transmit-only mode
  - receive-only mode
  - transmit/receive mode
- Built-in handshake function
- Provided with on-chip error detection function (data consistency check, parity, timeout, overflow, and overrun).
- Supporting job concept
- 128 words I/O buffer memory
- Direct access mode and memory mode (FIFO, dual buffer, transmit-only buffer) are selectable.
- Four different interrupt request signals (INTCSIHnIC, INTCSIHnIR, INTCSIHnIRE, INTCSIHnIJC)
- Provided with on-chip LBM (Loop Back Mode) function for self-test.
- CPU-controlled high-priority communication function
- Enforced chip select idle setting
- Provided with RCB (Recessive Configuration for Broadcasting) bit for broadcasting.

14.2.2 Functional Overview Description

The CSIH uses three signals for communication:

- Transmission clock CSIHTSCK (output in master mode, input in slave mode)
- Data output signal CSIHTSO
- Data input signal CSIHTSI

Additional signals are available for external control and monitoring.

- $\overline{\text{CSIHTSSI}}$: Slave select input signal
- CSIHTRYO: Ready/busy output signal (handshake signal)
- CSIHTRYI: Ready/busy input signal (handshake signal)
- CSIHTCSS[7:0]: Chip select signals

Data transmission is bit-wise and serial, and synchronous to the transmission clock.

The following table shows the most important registers for setting up the CSIH.

Table 14.12 Main Registers of CSIH

Register	Function
CSIHnCTL0	Enables/disables serial clock, and permits/ prohibits data transmission and data reception. Defines end-of-job behavior and enables/disables buffering (bypass of the buffer).
CSIHnCTL1	Controls options like interrupt timing, extended data length, job feature, data consistency check, loop-back mode, handshake, etc.
CSIHnCTL2	Selects master mode or slave mode, and selects transfer clock frequency for the on-chip baud rate generator (BRG) in master mode.
CSIHnBRSy	Sets transfer clock frequency for each chip select signal.
CSIHnMCTL0	Selects memory mode and specifies the time-out value
CSIHnMCTL1	Controls the memory in FIFO mode
CSIHnMCTL2	Controls the memory in dual buffer mode
CSIHnCFGx	Registers to configure the communication protocol for each chip select signal

14.2.3 Block Diagram

The block diagram shows the main components of the CSIH.

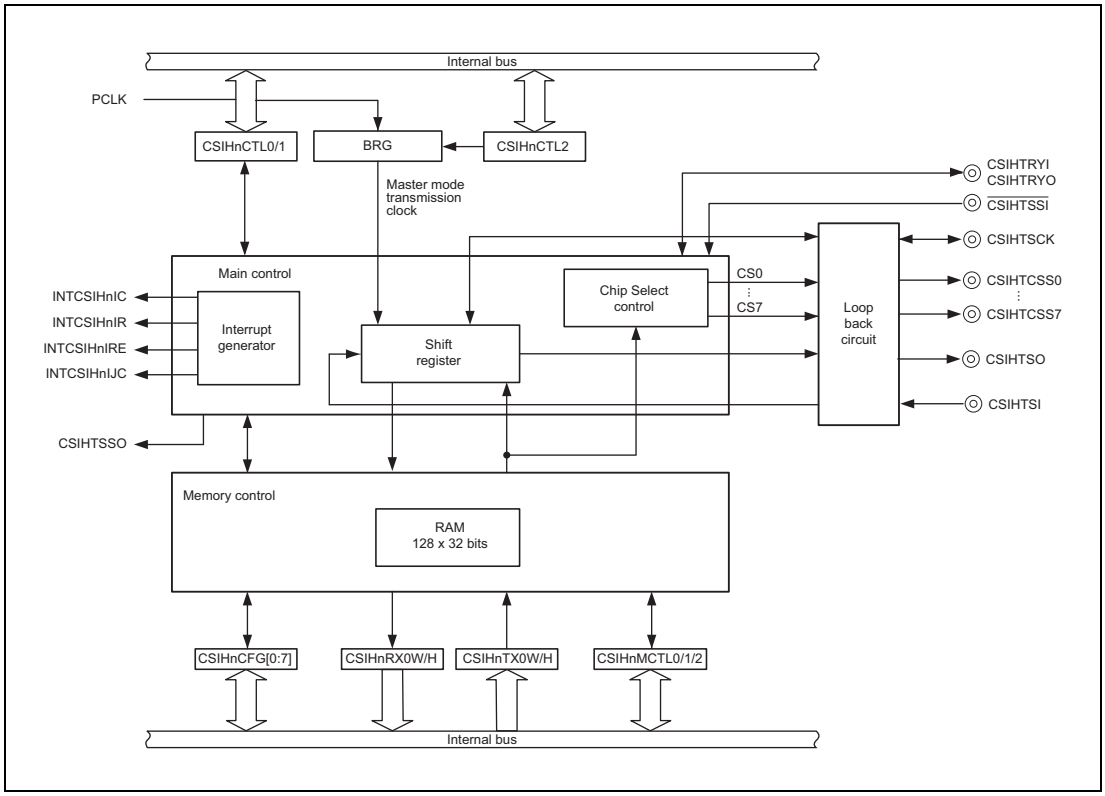

Figure 14.1 CSIH Block Diagram

In master mode, the transmission clock CSIHTSCK is generated by the built-in baud rate generator (BRG). In slave mode, the transmission clock is provided from an external source.

The built-in memory can be configured as FIFO, dual buffer (separate transmit and receive buffers), or transmit-only buffer. It can also be bypassed for data transmission and reception without buffering.

The loop back circuit disconnects the CSIH completely from the ports and supports internal self test.

NOTE

This chapter describes the following modes:

- The “operating mode” separates between master and slave mode. In this context, only a master can control and communicate with several slaves (for details see **Section 14.5.1, Operating Modes (Master/Slave)**).
- The “job mode” is related to the AUTOSAR job concept (for details see **Section 14.5.3.3, Job Concept**).
- The “memory mode” takes the various configurations of the associated buffer memory into account (for details see **Section 14.5.6, CSIH Buffer Memory**).
- The “data transfer mode” specifies the kind of the communication – transmit-only, receive only, or transmit/receive (for details see **Section 14.5.7, Data Transfer Modes**).

14.3 Registers

14.3.1 List of Registers

CSIH registers are listed in the following table.

The base addresses <CSIH_base> of the CSIHn is defined in **Section 14.1.2, Register Base Address**.

Table 14.13 Registers

Module	Register	Symbol	Address
CSIHn	CSIHn control register 0	CSIHnCTL0	<CSIHn_base> + 0000_H
CSIHn	CSIHn control register 1	CSIHnCTL1	<CSIHn_base> + 0010_H
CSIHn	CSIHn control register 2	CSIHnCTL2	<CSIHn_base> + 0014_H
CSIHn	CSIHn status register 0	CSIHnSTR0	<CSIHn_base> + 0004_H
CSIHn	CSIHn status clear register 0	CSIHnSTCR0	<CSIHn_base> + 0008_H
CSIHn	CSIHn memory control register 0	CSIHnMCTL0	<CSIHn_base> + 1040_H
CSIHn	CSIHn memory control register 1	CSIHnMCTL1	<CSIHn_base> + 1000_H
CSIHn	CSIHn memory control register 2	CSIHnMCTL2	<CSIHn_base> + 1004_H
CSIHn	CSIHn memory read/write pointer register 0	CSIHnMRWP0	<CSIHn_base> + 1018_H
CSIHn	CSIHn configuration register 0	CSIHnCFG0	<CSIHn_base> + 1044_H
CSIHn	CSIHn configuration register 1	CSIHnCFG1	<CSIHn_base> + 1048_H
CSIHn	CSIHn configuration register 2	CSIHnCFG2	<CSIHn_base> + $104C_H$
CSIHn	CSIHn configuration register 3	CSIHnCFG3	<CSIHn_base> + 1050_H
CSIHn	CSIHn configuration register 4	CSIHnCFG4	<CSIHn_base> + 1054_H
CSIHn	CSIHn configuration register 5	CSIHnCFG5	<CSIHn_base> + 1058_H
CSIHn	CSIHn configuration register 6	CSIHnCFG6	<CSIHn_base> + $105C_H$
CSIHn	CSIHn configuration register 7	CSIHnCFG7	<CSIHn_base> + 1060_H
CSIHn	CSIHn transmit data register 0 for word access	CSIHnTX0W	<CSIHn_base> + 1008_H
CSIHn	CSIHn transmit data register 0 for half word access	CSIHnTX0H	<CSIHn_base> + $100C_H$
CSIHn	CSIHn receive data register 0 for word access	CSIHnRX0W	<CSIHn_base> + 1010_H
CSIHn	CSIHn receive data register 0 for half word access	CSIHnRX0H	<CSIHn_base> + 1014_H
CSIHn	CSIHn baud rate setting register 0	CSIHnBRS0	<CSIHn_base> + 1068_H
CSIHn	CSIHn baud rate setting register 1	CSIHnBRS1	<CSIHn_base> + $106C_H$
CSIHn	CSIHn baud rate setting register 2	CSIHnBRS2	<CSIHn_base> + 1070_H
CSIHn	CSIHn baud rate setting register 3	CSIHnBRS3	<CSIHn_base> + 1074_H
CSIH	CSIH DMA select register*[1]	SELCSIHDMA	<CSIH0_base> + $E000_H$

Note 1. Supported only for CSIH0 and CSIH1.

14.3.2 CSIHnCTL0 — CSIHn Control Register 0

This register controls the operation clock and enables/disables transmission/reception and the memory part for transmission and/or reception. It forces the stop of communication at the end of the current job.

Access: This register can be read/written in 8- or 1-bit units.

Address: <CSIHn_base> + 0000_H

Value after reset: 00_H

Bit	7	6	5	4	3	2	1	0
	CSIHnPWR	CSIHnTXE	CSIHnRXE	—	—	—	CSIHnJOBE	CSIHnMBS
Value after reset	0	0	0	0	0	0	0	0
R/W	R/W	R/W	R/W	R	R	R	R/W	R/W

Table 14.14 CSIHnCTL0 Register Contents

Bit Position	Bit Name	Function
7	CSIHnPWR	Controls the operation clock. 0: Stops operation clock. 1: Provides operation clock. Clearing CSIHnPWR to 0 resets the internal circuits, stops operation, and sets CSIH to standby state. No clock is provided to internal circuits. If CSIHnPWR is cleared to 0 during communication, ongoing communication is immediately aborted. In this case, communication settings must be made from the beginning.
6	CSIHnTXE	Permits or prohibits transmission. 0: Prohibits transmission. 1: Permits transmission.
5	CSIHnRXE	Permits or prohibits reception. 0: Prohibits reception. 1: Permits reception.
4 to 2	Reserved	When read, the value after reset is read. When writing, write the value after reset.
1	CSIHnJOBE	Stops communication at the end of the current job. (Communication ends when data is written to the transmit buffer while CSIHnTX0W.CSIHnEOJ = 1 (job completion).) 0: Communication stop is not requested. 1: Stops communication. This bit can be used to abort an ongoing job. This bit is cleared to 0 automatically. If this bit is set to 1, the read value is always 0. In FIFO mode, the pointer must be cleared by setting CSIHnSTCR0.CSIHnPCT = 1 before the next communication is started
0	CSIHnMBS	Bypasses the memory for transmission and/or reception data. 0: Memory mode CSIH memory is used for transmission and/or reception data. 1: Direct access mode CSIH memory is bypassed.

CAUTION

For the setting of this register, refer to **Table 14.35, Notes on Setting Registers**.

14.3.3 CSIHnCTL1 — CSIHn Control Register 1

This register specifies the interrupt timing and the interrupt delay mode. It enables/disables extended data length control, data consistency check, loop-back mode, handshake functionality, and job mode. It selects the active output level of each chip select signal and the behavior of the chip select signals after the transfer of the final data.

Access: This register can be read/written in 32-bit units.

Address: <CSIHn_base> + 0010_H

Value after reset: $0000\ 0000_H$

Bit	31	30	29	28	27	26	25	24	23	22	21	20	19	18	17	16
	—	—	—	—	—	—	—	—	—	—	—	—	—	CSIHn PHE	CSIHn CKR	CSIHn SLIT
Value after reset	0	0	0	0	0	0	0	0	0	0	0	0	0	0	0	0
R/W	R	R	R	R	R	R	R	R	R	R	R	R	R	R/W	R/W	R/W

Bit	15	14	13	12	11	10	9	8	7	6	5	4	3	2	1	0
	CSIHn CSL7	CSIHn CSL6	CSIHn CSL5	CSIHn CSL4	CSIHn CSL3	CSIHn CSL2	CSIHn CSL1	CSIHn CSL0	CSIHn EDLE	CSIHn JE	CSIHn DCS	CSIHn CSRI	CSIHn LBM	CSIHn SIT	CSIHn HSE	CSIHn SSE
Value after reset	0	0	0	0	0	0	0	0	0	0	0	0	0	0	0	0
R/W	R/W	R/W	R/W	R/W	R/W	R/W	R/W	R/W	R/W	R/W	R/W	R/W	R/W	R/W	R/W	R/W

Table 14.15 CSIHnCTL1 Register Contents (1/2)

Bit Position	Bit Name	Function
31 to 19	Reserved	When read, the value after reset is read. When writing, write the value after reset.
18	CSIHnPHE	Sets the CPU-controlled priority-based communication function. 0: The CPU-controlled high-priority communication function is disabled. 1: The CPU-controlled high-priority communication function is enabled. To enable the CPU-controlled high-priority communication function, set this bit to 1 and set CSIHnJE = 1. This bit can only be set in transmit-only buffer mode.
17	CSIHnCKR	CSIHTSCK clock inversion function 0: The default level of CSIHTSCK is high 1: The default level of CSIHTSCK is low For details, see **Section 14.3.11, CSIHnCFGx — CSIHn Configuration Register x**.
16	CSIHnSLIT	Selects the timing of interrupt INTCSIHnIC. 0: Normal interrupt timing (interrupt is generated after the transfer) 1: As soon as the contents of the CSIHnTX0W/H register are transferred to the shift register, an interrupt is generated (this function is activated only in direct access mode and transmit-only buffer mode). For details, see **Section 14.4.3, INTCSIHnIC (Communication Status Interrupt)**.
15 to 8	CSIHnCSL[7:0]	Selects the active output level of chip select signal x (CSIHTCSSx). (x = 0 to 7) 0: Chip select signal is active low. 1: Chip select signal is active high. For details, see **Section 14.5.3, Chip Selection (CS) Features**.
7	CSIHnEDLE	Enables/disables extended data length (EDL) mode. 0: Disables extended data length mode. 1: Enables extended data length mode. For details, see **Section 14.5.8.2, Data Length Greater than 16 Bits**.

Table 14.15 CSIHnCTL1 Register Contents (2/2)

Bit Position	Bit Name	Function
6	CSIHnJE	Enables/disables job mode. 0: Disables job mode. 1: Enables job mode. For details, see **Section 14.5.3.3, Job Concept**. The CSIHnCTL0.CSIHnJOBE, CSIHnTX0W.CSIHnEOJ, and CSIHnTX0W.CSIHnCIRE bits are enabled only when CSIHnJE = 1. Setting this bit in slave mode is prohibited. In addition, to enable the CPU-controlled high-priority communication function, set CSIHnPHE = 1 and this bit to 1.
5	CSIHnDCS	Enables/disables data consistency check. 0: Disables data consistency check. 1: Enables data consistency check. For details, see **Section 14.5.12.1, Data Consistency Check**.
4	CSIHnCSRI	Defines chip select signal behavior after last data transfer. 0: Chip select signal holds the active level. 1: Chip select signal returns to the inactive level. The last data is judged at the following times. • INTCSIHnIC interrupt output timing when the next writing is not made at the end of communication in FIFO mode • INTCSIHnIC interrupt output timing while CSIHnCTL1.CSIHnSLIT is set to 0 in direct access mode
3	CSIHnLBM	Controls loop-back mode (LBM). 0: Deactivates loop-back mode. 1: Activates loop-back mode. For details, see **Section 14.5.13, Loop-Back Mode**.
2	CSIHnSIT	Selects interrupt delay mode. 0: No delay is generated. 1: Half clock delay is generated for all interrupts. This bit is only valid in master mode. In slave mode, no delay is generated. For details, see **Section 14.4.2, Interrupt Delay**.
1	CSIHnHSE	Enables/disables the handshake function. 0: Disables the handshake function. 1: Enables the handshake function. For details refer to **Section 14.5.11, Handshake Function**.
0	CSIHnSSE	Enables/disables the slave select function. 0: Input signal $\overline{\text{CSIHTSSI}}$ is disabled. 1: Input signal $\overline{\text{CSIHTSSI}}$ is enabled. If the slave select function is not used, this bit must be set to 0 (see also **Section 14.5.2, Master/Slave Connections**).

Details about CSIHnCTL1.CSIHnSSE are shown in the following tables.

Table 14.16 Operation of the Slave Select Function during Reception

CSIHnCTL0. CSIHnRXE	CSIHnCTL1. CSIHnSSE	$\overline{\text{CSIHTSSI}}$	Receive Operation
0	—	—	Reception is prohibited
1	0	—	Possible
1	1	0	Possible
1	1	1	Disabled

Table 14.17 Operation of the Slave Select Function during Transmission

CSIHnCTL0. CSIHnTXE	CSIHnCTL1. CSIHnSSE	$\overline{\text{CSIHTSSI}}$	Transmit Operation
0	—	—	Transmission is prohibited
1	0	—	Possible
1	1	0	Possible
1	1	1	Disabled

CAUTION

For the setting of this register, refer to **Table 14.35, Notes on Setting Registers**.

14.3.4 CSIHnCTL2 — CSIHn Control Register 2

This register selects operating mode and the basic clock value, and specifies the transfer clock frequency.

For details see **Section 14.5.5, Transmission Clock Selection**.

Access: This register can be read/written in 16-bit units.

Address: <CSIHn_base> + 0014_H

Value after reset: $E000_H$

Bit	15	14	13	12	11	10	9	8	7	6	5	4	3	2	1	0
	CSIHnPRS[2:0]			—	—	—	—	—	—	—	—	—	—	—	—	—
Value after reset	1	1	1	0	0	0	0	0	0	0	0	0	0	0	0	0
R/W	R/W	R/W	R/W	R	R	R	R	R	R	R	R	R	R	R	R	R

Table 14.18 CSIHnCTL2 Register Contents

Bit Position	Bit Name	Function
15 to 13	CSIHnPRS[2:0]	These bits select the operation mode and the reference clock value.
12 to 0	Reserved	When read, the value after reset is read. When writing, write the value after reset.

CSIHnPRS2	CSIHnPRS1	CSIHnPRS0	Selection of Reference Clock (PRSOUT)
0	0	0	PCLK (Master mode)
0	0	1	PCLK/2 (Master mode)
0	1	0	PCLK/4 (Master mode)
0	1	1	PCLK/8 (Master mode)
1	0	0	PCLK/16 (Master mode)
1	0	1	PCLK/32 (Master mode)
1	1	0	PCLK/64 (Master mode)
1	1	1	External clock via CSIHTSCK(in) (Slave mode)

In master mode, the following bits are used to set the transfer clock frequency:

- CSIHnCTL2.CSIHnPRS[2:0],
- CSIHnCFGx.CSIHnBRSS[1:0], and
- CSIHnBRSy.CSIHnBRS[11:0]

In addition, any of the four different transfer clock frequency settings that are specified by the CSIHnBRSy.CSIHnBRS[11:0] bits is selected for each chip select signal. To select the transfer clock frequency setting for each chip select signal, use the CSIHnCFGx.CSIHnBRSS[1:0] bits.

The following table shows the relationship between CSIHnCFGx.CSIHnBRSS[1:0] and CSIHnBRSy.CSIHnBRS[11:0].

Table 14.19 Relationship Between CSIHnCFGx.CSIHnBRSS[1:0] and CSIHnBRSy.CSIHnBRS[11:0]

CSIHnCFGx (x = 0 to 7) CSIHnBRSS1, CSIHnBRSS0	Transfer Clock Frequency Setting Bit to be Selected
00	CSIHnBRS0.CSIHnBRS[11:0]
01	CSIHnBRS1.CSIHnBRS[11:0]
10	CSIHnBRS2.CSIHnBRS[11:0]
11	CSIHnBRS3.CSIHnBRS[11:0]

The following table shows the relationship between the transfer clock frequency setting (CSIHnBRSy[11:0]) and the transfer clock frequency selected by the CSIHnBRSS[1:0] bits when the CSIHnPRS[2:0] bit value is α.

Table 14.20 Relationship Between CSIHnBRSy[11:0] and Transfer Clock Frequency

CSIHnBRS[11:0]	Transfer Clock Frequency
0	BRG stopped
1	PCLK / (2^{α} × 1 × 2)
2	PCLK / (2^{α} × 2 × 2)
3	PCLK / (2^{α} × 3 × 2)
4	PCLK / (2^{α} × 4 × 2)
...	…
4095	PCLK / (2^{α} × 4095 × 2)

When time-out errors are being used in slave mode, the clock selected by this setting is used. When the clock is being used in slave mode, although the CSIHnPRS[2:0] bits are set to 111_B, this has the same effect on the prescaler as the CSIHnPRS[2:0] bits are being set to 000_B. Set the CSIHnBRSy.CSIHnBRS[11:0] bits to a value other than 000H to use time-out errors.

CAUTION

For the setting of this register, refer to **Table 14.35, Notes on Setting Registers**.

14.3.5 CSIHnSTR0 — CSIHn Status Register 0

This register indicates the status of CSIH.

Access: This register can only be read in 32-bit units.

Address: <CSIHn_base> + 0004_H

Value after reset: $0000\ 0010_H$

Bit	31	30	29	28	27	26	25	24	23	22	21	20	19	18	17	16
	CSIHnSRP[7:0]								CSIHnSPF[7:0]							
Value after reset	0	0	0	0	0	0	0	0	0	0	0	0	0	0	0	0
R/W	R	R	R	R	R	R	R	R	R	R	R	R	R	R	R	R

Bit	15	14	13	12	11	10	9	8	7	6	5	4	3	2	1	0
	CSIHn TMOE	CSIHn OFE	—	—	—	—	—	CSIHn HPST	CSIHn TSF	—	CSIHn FLF	CSIHn EMF	CSIHn DCE	—	CSIHn PE	CSIHn OVE
Value after reset	0	0	0	0	0	0	0	0	0	0	0	1	0	0	0	0
R/W	R	R	R	R	R	R	R	R	R	R	R	R	R	R	R	R

Table 14.21 CSIHnSTR0 Register Contents (1/3)

Bit Position	Bit Name	Function
31 to 24	CSIHnSRP[7:0]	Indicates the number of received data packets in FIFO mode. **CSIHnSRP[7:0]** — **Description** 00_H — Number of received data packets (0 to 128) … 80_H Other than the above — Undefined These bits are cleared by CSIHnSTCR0.CSIHnPCT. In direct access mode, dual buffer mode, or transmit-only buffer memory mode, this value is fixed to 00_H. In direct access mode, this bit is fixed to 0 because there is no pointer. In buffer mode, this bit is fixed to 0 because the number of data packets is managed by CSIHnMCTL2.CSIHnND[7:0].
23 to 16	CSIHnSPF[7:0]	Indicates the number of untransmitted data in FIFO mode. (The number of data written by the CPU is the number of transmission data.) **CSIHnSPF[7:0]** — **Description** 00_H — Number of untransmitted data packets (0 to 128) … 80_H Other than the above — Undefined These bits are cleared by CSIHnSTCR0.CSIHnPCT. In direct access mode, dual buffer mode, or transmit-only buffer memory mode, this value is fixed to 00_H. In direct access mode, this bit is fixed to 0 because there is no pointer. In buffer mode, this bit is fixed to 0 because the number of data packets is managed by CSIHnMCTL2.CSIHnND[7:0].

Table 14.21 CSIHnSTR0 Register Contents (2/3)

Bit Position	Bit Name	Function
15	CSIHnTMOE	Time-out error flag in FIFO mode. Indicates whether a time-out error was detected in FIFO mode. 0: No time out error is detected. 1: A time out error is detected. For details, see **Section 14.5.12.3, Time-Out Error**. This bit is cleared by CSIHnSTCR0.CSIHnTMOEC. However, if this bit is set to 1 by the detection of timeout error and cleared to 0 by CSIHnSTCR0.CSIHnTMOEC simultaneously, setting to 1 is prioritized. This bit is initialized when CSIHnCTL0.CSIHnPWR changes from 0 to 1 or from 1 to 0.
14	CSIHnOFE	Overflow error flag in FIFO mode. Indicates whether an overflow error was detected in FIFO mode. 0: No overflow error is detected. 1: An overflow error is detected. For details, see **Section 14.5.12.4, Overflow Error**. This bit is cleared by CSIHnSTCR0.CSIHnOFEC. However, if this bit is set to 1 by the detection of overflow error and cleared to 0 by CSIHnSTCR0.CSIHnOFEC simultaneously, setting to 1 is prioritized. This bit is initialized when CSIHnCTL0.CSIHnPWR changes from 0 to 1 or from 1 to 0. When CSIHnCTL0.CSIHnPWR = 0, if transmission data (129) is written to CSIHnTX0W or CSIHnTX0H, an overflow error occurs.
13 to 9	Reserved	When read, the value after reset is read.
8	CSIHnHPST	Communication priority indication flag 0: Indicates low-priority communication is in progress. 1: Indicates high-priority communication is in progress. This bit always reads 0 if CPU-controlled high-priority communication is disabled (CSIHnPHE = 0).
7	CSIHnTSF	Transfer status flag. 0: Idle state 1: Communication is in progress or being prepared. The timing to set or clear this bit is as follows:

Master Mode	Timing to Set: Direct Access Mode, FIFO Mode	Timing to Set: Double Buffer Mode, Transmit-only Mode	Timing to Clear
Transmit-only mode	Data is written to a transmit register (CSIHnTX0W/ CSIHnTX0H)	Bit CSIHnMCTL2. CSIHnBTST is set	Within a half clock of the last serial clock edge
Transmit/receive mode			
Receive-only mode			

Slave Mode	Timing to Set: Direct Access Mode, FIFO Mode	Timing to Set: Double Buffer Mode, Transmit-only Mode	Timing to Clear
Transmit-only mode	Data is written to a transmit register (CSIHnTX0W/ CSIHnTX0H)	Bit CSIHnMCTL2. CSIHnBTST is set	Within a half clock of the last serial clock edge
Transmit/receive mode			
Receive-only mode	Input timing of CSIHTSCK		

6	Reserved	When read, the value after reset is read.
5	CSIHnFLF	A flag indicating that the buffer is full in FIFO mode. 0: FIFO buffer is not full. 1: FIFO buffer is full. This bit is cleared by CSIHnSTCR0.CSIHnPCT. The FIFO buffer might be filled with untransmitted data or received data.

Table 14.21 CSIHnSTR0 Register Contents (3/3)

Bit Position	Bit Name	Function
4	CSIHnEMF	A flag indicating that the buffer is empty in FIFO mode. 0: FIFO buffer is not empty. 1: FIFO buffer is empty. This bit is set to 1 by CSIHnSTCR0.CSIHnPCT. This bit is set to 1 when CSIHnSTR0.CSIHnSRP[7:0] + CSIHnSTR0.CSIHnSPF[7:0] = 00_H.
3	CSIHnDCE	Data consistency check error flag. 0: No data consistency check error is detected. 1: Data consistency check error is detected. This bit is cleared by writing 1 to CSIHnSTCR0.CSIHnDCEC. However, if this bit is set to 1 by the detection of a data consistency check error and cleared to 0 by CSIHnSTCR0.CSIHnDCEC simultaneously, setting to 1 due to the detection of a data consistency check error is prioritized. This bit is initialized when CSIHnCTL0.CSIHnPWR changes from 0 to 1 or from 1 to 0.
2	Reserved	When read, the value after reset is read.
1	CSIHnPE	Parity error flag 0: No parity error is detected. 1: Parity error is detected. This bit is cleared by writing 1 to CSIHnSTCR0.CSIHnPEC. However, if this bit is set to 1 by the detection of parity error and cleared to 0 by CSIHnSTCR0.CSIHnPEC simultaneously, setting to 1 due to the detection of a parity error is prioritized. This bit is initialized when CSIHnCTL0.CSIHnPWR changes from 0 to 1 or from 1 to 0.
0	CSIHnOVE	Overrun error flag (Fixed to 0 in dual buffer mode). 0: No overrun error is detected. 1: Overrun error is detected. This bit is cleared by writing 1 to CSIHnSTCR0.CSIHnOVEC. However, if this bit is set to 1 by the detection of overrun error and cleared to 0 by CSIHnSTCR0.CSIHnOVEC simultaneously, setting to 1 due to the detection of an overrun error is prioritized. This bit is initialized when CSIHnCTL0.CSIHnPWR changes from 0 to 1 or from 1 to 0.

Table 14.22 Behavior in Memory Mode

Bit Name	Bit Position	Direct Access Mode	FIFO Mode	Transmit-only Buffer Mode	Dual Buffer Mode
CSIHnSRP[7:0]	31 to 24	Fixed to 0	Number of received words	Fixed to 0	Fixed to 0
CSIHnSPF[7:0]	23 to 16	Fixed to 0	Number of untransmitted data	Fixed to 0	Fixed to 0
CSIHnTMOE	15	Fixed to 0	Time-out error flag 0: No error is detected. 1: An error is detected.	Fixed to 0	Fixed to 0
CSIHnOFE	14	Fixed to 0	Overflow error flag 0: No error is detected. 1: An error is detected.	Fixed to 0	Fixed to 0
CSIHnTSF	7	0: Idle state 1: Transmission is in progress or being prepared			
CSIHnFLF	5	Fixed to 0	FIFO full flag 0: FIFO is not full. 1: FIFO is full.	Fixed to 0	Fixed to 0
CSIHnEMF	4	Fixed to 1	FIFO empty flag 0: FIFO is not empty. 1: FIFO is empty.	Fixed to 1	Fixed to 1
CSIHnDCE	3	0: No error is detected. 1: An error is detected.			
CSIHnPE	1	0: No error is detected. 1: An error is detected.			
CSIHnOVE	0	0: No error is detected. 1: An error is detected.	0: No error is detected. 1: An error is detected.	0: No error is detected. 1: An error is detected.	Fixed to 0

CAUTION

For the setting of this register, refer to **Table 14.35, Notes on Setting Registers**.

14.3.6 CSIHnSTCR0 — CSIHn Status Clear Register 0

This register clears the status flags of the CSIHnSTR0 status register.

Access: This register can be read/written in 16-bit units.
When read, the value 0000_H is always returned.

Address: <CSIHn_base> + 0008_H

Value after reset: 0000_H

Bit	15	14	13	12	11	10	9	8	7	6	5	4	3	2	1	0
	CSIHn TMOEC	CSIHn OFEC	—	—	—	—	—	CSIHn PCT	—	—	—	—	CSIHn DCEC	—	CSIHn PEC	CSIHn OVEC
Value after reset	0	0	0	0	0	0	0	0	0	0	0	0	0	0	0	0
R/W	R/W	R/W	R	R	R	R	R	R/W	R	R	R	R	R/W	R	R/W	R/W

Table 14.23 CSIHnSTCR0 Register Contents

Bit Position	Bit Name	Function
15	CSIHnTMOEC	Controls the time-out error flag clear command. 0: No operation. 1: Clears the time out error flag (CSIHnSTR0.CSIHnTMOE). The read value is always 0.
14	CSIHnOFEC	Controls the overflow error flag clear command. 0: No operation. 1: Clears the overflow error flag (CSIHnSTR0.CSIHnOFE). The read value is always 0.
13 to 9	Reserved	When read, the value after reset is read. When writing, write the value after reset.
8	CSIHnPCT	Controls the FIFO pointer clear command. 0: No operation. 1: Clears the FIFO buffer pointers (in FIFO mode, dual buffer mode, and transmit-only buffer mode) and the status bits below. The read value is always 0. **FIFO Buffer Pointer** / **Status Bit** CSIHnMRWP0.CSIHnTRWA[6:0] / CSIHnSTR0.CSIHnSPF[7:0] CSIHnMRWP0.CSIHnRRA[6:0] / CSIHnSTR0.CSIHnSRP[7:0] CSIHnMCTL2.CSIHnSOP[6:0] / CSIHnSTR0.CSIHnFLF CSIHnSTR0.CSIHnTSF
7 to 4	Reserved	When read, the value after reset is read. When writing, write the value after reset.
3	CSIHnDCEC	Controls the data consistency check error flag clear command. 0: No operation. 1: Clears the data consistency check error flag (CSIHnSTR0.CSIHnDCE). The read value is always 0.
2	Reserved	When read, the value after reset is read. When writing, write the value after reset.
1	CSIHnPEC	Controls the parity error flag clear command. 0: No operation. 1: Clears the parity error flag (CSIHnSTR0.CSIHnPE). The read value is always 0.
0	CSIHnOVEC	Controls the overrun error flag clear command. 0: No operation. 1: Clears the overrun error flag (CSIHnSTR0.CSIHnOVE). The read value is always 0.

CAUTION

For the setting of this register, refer to **Table 14.35, Notes on Setting Registers**.

14.3.7 CSIHnMCTL0 — CSIHn Memory Control Register 0

This register selects the memory mode and the time-out setting.

Access: This register can be read/written in 16-bit units.

Address: <CSIHn_base> + 1040_H

Value after reset: $001F_H$

Bit	15	14	13	12	11	10	9	8	7	6	5	4	3	2	1	0
	—	—	—	—	—	—	CSIHnMMS[1:0]		—	—	—	CSIHnTO[4:0]				
Value after reset	0	0	0	0	0	0	0	0	0	0	0	1	1	1	1	1
R/W	R	R	R	R	R	R	R/W	R/W	R	R	R	R/W	R/W	R/W	R/W	R/W

Table 14.24 CSIHnMCTL0 Register Contents

Bit Position	Bit Name	Function
15 to 10	Reserved	When read, the value after reset is read. When writing, write the value after reset.
9, 8	CSIHnMMS [1:0]	Selects the memory mode. **CSIHn MMS1 / CSIHn MMS0 / Description** 0 / 0 / FIFO mode 0 / 1 / Dual buffer mode 1 / 0 / Transmit-only buffer mode 1 / 1 / Prohibited After a change of the memory mode, the respective buffer pointers must be cleared by setting the CSIHnSTCR0.CSIHnPCT bit to 1. In direct access mode, the setting of these bits is ignored.
7 to 5	Reserved	When read, the value after reset is read. When writing, write the value after reset.
4 to 0	CSIHnTO[4:0]	Selects the time-out setting in FIFO mode. **CSIHnTO[4:0] / Description** 00000_B / No time-out is detected 00001_B / Time-out is (1 × 8 × BRG output clocks) 00010_B / Time-out is (2 × 8 × BRG output clocks) ... 11111_B / Time-out is (31 × 8 × BRG output clocks) **CAUTION** Changing the time-out setting is only permitted when CSIHnCTL0.CSIHnPWR = 0. Set the CSIHnTO[4:0] bits to 00000_B in modes other than FIFO mode (direct access mode, dual buffer mode, and transmit-only buffer mode). For details about time-out detection, see also **Section 14.5.12.3, Time-Out Error**.

CAUTION

For the setting of this register, refer to **Table 14.35, Notes on Setting Registers**.

14.3.8 CSIHnMCTL1 — CSIHn Memory Control Register 1

This register selects the conditions to generate the interrupt requests, INTCSIHnIC and INTCSIHnIR in FIFO mode.

Access: This register can be read/written in 32-bit units.

Address: <CSIHn_base> + 1000_H

Value after reset: $0000\ 0000_H$

Bit	31	30	29	28	27	26	25	24	23	22	21	20	19	18	17	16
	—	—	—	—	—	—	—	—	—	CSIHnFES[6:0]						
Value after reset	0	0	0	0	0	0	0	0	0	0	0	0	0	0	0	0
R/W	R	R	R	R	R	R	R	R	R	R/W	R/W	R/W	R/W	R/W	R/W	R/W

Bit	15	14	13	12	11	10	9	8	7	6	5	4	3	2	1	0
	—	—	—	—	—	—	—	—	—	CSIHnFFS[6:0]						
Value after reset	0	0	0	0	0	0	0	0	0	0	0	0	0	0	0	0
R/W	R	R	R	R	R	R	R	R	R	R/W	R/W	R/W	R/W	R/W	R/W	R/W

Table 14.25 CSIHnMCTL1 Register Contents

Bit position	Bit name	Function
31 to 23	Reserved	When read, the value after reset is read. When writing, write the value after reset.
22 to 16	CSIHnFES[6:0]	Selects the conditions to generate the INTCSIHnIC interrupt (transmit data empty) in FIFO mode. When the number of untransmitted data to be transmitted in FIFO (checked by the CSIHnSTR0.CSIHnSPF[7:0] bit) and CSIHnMCTL1.CSIHnFES[6:0] match, the INTCSIHnIC interrupt request is generated.
15 to 7	Reserved	When read, the value after reset is read. When writing, write the value after reset.
6 to 0	CSIHnFFS[6:0]	Selects the conditions to generate the INTCSIHnIR interrupt (receive data full) in FIFO mode. When the number of received data in FIFO (checked by the CSIHnSTR0.CSIHnSRP[7:0] bit) and (128 - CSIHnMCTL1.CSIHnFFS[6:0]) match, the INTCSIHnIR interrupt request is generated.

CAUTION

For the setting of this register, refer to **Table 14.35, Notes on Setting Registers**.

14.3.9 CSIHnMCTL2 — CSIHn Memory Control Register 2

This register controls the operation of the memory in dual buffer or transmit-only buffer mode and triggers to start communication in buffer mode.

Access: This register can be read/written in 32-bit units.

Address: <CSIHn_base> + 1004_H

Value after reset: $0000\ 0000_H$

Bit	31	30	29	28	27	26	25	24	23	22	21	20	19	18	17	16
	CSIHn BTST	—	—	—	—	—	—	—	CSIHnND[7:0]							
Value after reset	0	0	0	0	0	0	0	0	0	0	0	0	0	0	0	0
R/W	R/W	R	R	R	R	R	R	R	R/W	R/W	R/W	R/W	R/W	R/W	R/W	R/W

Bit	15	14	13	12	11	10	9	8	7	6	5	4	3	2	1	0
	—	—	—	—	—	—	—	—	—	CSIHnSOP[6:0]						
Value after reset	0	0	0	0	0	0	0	0	0	0	0	0	0	0	0	0
R/W	R	R	R	R	R	R	R	R	R	R/W	R/W	R/W	R/W	R/W	R/W	R/W

Table 14.26 CSIHnMCTL2 Register Contents (1/2)

Bit Position	Bit Name	Function
31	CSIHnBTST	Provides a start trigger for buffer transfer. 0: No operation. 1: Issues the start transfer command. The read value is always 0. **CAUTION** This bit can only be used in dual buffer mode and transmit-only buffer mode.
30 to 24	Reserved	When read, the value after reset is read. When writing, write the value after reset.
23 to 16	CSIHnND[7:0]	Specifies the number of data for each memory mode. The read value indicates the number of remaining communication data.

CSIHn ND[7:0]	Dual Buffer Mode	Transmit-only Buffer Mode	FIFO Mode	Direct Access Mode
00_H	Transmit 0 data	Transmit 0 data	No influence	No influence
01_H	Transmit 1 data	Transmit 1 data	No influence	No influence
...	...	...	No influence	No influence
$3F_H$	Transmit 63 data	Transmit 63 data	No influence	No influence
40_H	Transmit 64 data	Transmit 64 data	No influence	No influence
...	Prohibited	...	No influence	No influence
$7F_H$	Prohibited	Transmit 127 data	No influence	No influence
80_H	Prohibited	Transmit 128 data	No influence	No influence
Other than the above	Setting is prohibited.			

The values are automatically decremented after data transfer (Not decremented in direct access mode).

15 to 7	Reserved	When read, the value after reset is read. When writing, write the value after reset.

Table 14.26 CSIHnMCTL2 Register Contents (2/2)

Bit Position	Bit Name	Function
6 to 0	CSIHnSOP[6:0]	Selects the pointer of the data to be transmitted. If communication is forced to stop by setting CSIHnCTL0.CSIHnPWR to 0 or CSIHnSTCR0.CSIHnPCT to 1, these bits are cleared by the hardware. In FIFO mode, these bits indicate the transmitted address. After the data transfer, the value increments automatically. **CAUTION** In direct access mode, these bits are not incremented.

CSIHn SOP[6:0]	Dual bUffer Mode	Transmit-only Buffer Mode	FIFO Mode	Direct Access Mode
00_H	0000_H	0000_H	0000_H	No influence
01_H	0004_H	0004_H	0004_H	No influence
...	...	...	...	No influence
$3F_H$	$00FC_H$	$00FC_H$	$00FC_H$	No influence
40_H	Prohibited	0100_H	0100_H	No influence
...	Prohibited	...	...	No influence
$7F_H$	Prohibited	$01FC_H$	$01FC_H$	No influence

CAUTION

For the setting of this register, refer to **Table 14.35, Notes on Setting Registers**.

14.3.10 CSIHnMRWP0 — CSIHn Memory Read/Write Pointer Register 0

This register sets the pointers for reading from and writing to the dual or transmit-only buffer.

Access: This register can be read/written in 32-bit units.

Address: <CSIHn_base> + 1018_H

Value after reset: $0000\ 0000_H$

Bit	31	30	29	28	27	26	25	24	23	22	21	20	19	18	17	16
	—	—	—	—	—	—	—	—	—	CSIHnRRA[6:0]						
Value after reset	0	0	0	0	0	0	0	0	0	0	0	0	0	0	0	0
R/W	R	R	R	R	R	R	R	R	R	R/W	R/W	R/W	R/W	R/W	R/W	R/W

Bit	15	14	13	12	11	10	9	8	7	6	5	4	3	2	1	0
	—	—	—	—	—	—	—	—	—	CSIHnTRWA[6:0]						
Value after reset	0	0	0	0	0	0	0	0	0	0	0	0	0	0	0	0
R/W	R	R	R	R	R	R	R	R	R	R/W	R/W	R/W	R/W	R/W	R/W	R/W

Table 14.27 CSIHnMRWP0 Register Contents (1/2)

Bit Position	Bit Name	Function
31 to 23	Reserved	When read, the value after reset is read. When writing, write the value after reset.
22 to 16	CSIHnRRA[6:0]	Selects the read pointer of the receive buffer.

CSIHn RRA[6:0]	Dual Buffer Mode	Transmit-only Buffer Mode	FIFO Mode	Direct Access Mode
00_H	0000_H	No influence	0000_H	No influence
01_H	0004_H	No influence	0004_H	No influence
...	...	No influence	...	No influence
$3F_H$	$00FC_H$	No influence	$00FC_H$	No influence
40_H	Prohibited	No influence	0100_H	No influence
...	Prohibited	No influence	...	No influence
$7F_H$	Prohibited	No influence	$01FC_H$	No influence

These bits are automatically incremented when received data is read.
When CSIHnRRA[6:0] is $7F_H$ and received data is read,CSIHnRRA[6:0] is 00_H.
If an overrun error is generated while reading the CSIHnRX0W or CSIHnRX0H register, the read pointer is not incremented.
These bits are cleared when CSIHnSTCR0.CSIHnPCT is set to 1.
In direct access mode and transmit-only buffer mode, these bits are not incremented.
To perform write access in transmit-only buffer mode, set these bits to 0000_H.
In FIFO mode, these bits indicate the read address of the received data.

15 to 7	Reserved	When read, the value after reset is read. When writing, write the value after reset.

Table 14.27 CSIHnMRWP0 Register Contents (2/2)

Bit Position	Bit Name	Function
6 to 0	CSIHnTRWA [6:0]	Selects the read/write pointer of the transmit buffer.

CSIHn TRWA[6:0]	Dual Buffer Mode	Transmit-only Buffer Mode	FIFO Mode	Direct Access Mode
00_H	0000_H	0000_H	0000_H	No influence
01_H	0004_H	0004_H	0004_H	No influence
...	...	...	...	No influence
$3F_H$	$00FC_H$	$00FC_H$	$00FC_H$	No influence
40_H	Prohibited	0100_H	0100_H	No influence
...	Prohibited	...	...	No influence
$7F_H$	Prohibited	$01FC_H$	$01FC_H$	No influence

These bits are automatically incremented when the transmission data is written or read.
When CSIHnTRWA[6:0] is $7F_H$ and received data is read, CSIHnTRWA[6:0] is 00_H.
These bits are cleared when CSIHnSTCR0.CSIHnPCT is set to 1.
In direct access mode, these bits are not incremented.
In FIFO mode, these bits indicate the read/write address of transmission data.

CAUTION

For the setting of this register, refer to **Table 14.35, Notes on Setting Registers**.

14.3.11 CSIHnCFGx — CSIHn Configuration Register x

These eight registers specify for each chip select signal CSIHTCSSx baud rate, parity, data length, recessive configuration for broadcasting, serial data direction, clock and data phase, idle enforcement configuration, idle time, hold time, inter-data time and setup time.

Slave mode

In slave mode, the transmission protocol setting of the CSIHnCFG0 register is effective.

- CSIHnPSx[1:0]: parity usage
- CSIHnDLSx[3:0]: data length selection
- CSIHnDIRx: data direction
- CSIHnCKPx, CSIHnDAPx: clock and data phase

In slave mode, set 0 to all the bits other than above in the CSIHnCFG0 register, and the CSIHnCFG1 to CSIHnCFG7 registers.

Access: This register can be read/written in 32-bit units.

Address:
CSIHnCFG0: <CSIHn_base> + 1044_H
CSIHnCFG1: <CSIHn_base> + 1048_H
CSIHnCFG2: <CSIHn_base> + $104C_H$
CSIHnCFG3: <CSIHn_base> + 1050_H
CSIHnCFG4: <CSIHn_base> + 1054_H
CSIHnCFG5: <CSIHn_base> + 1058_H
CSIHnCFG6: <CSIHn_base> + $105C_H$
CSIHnCFG7: <CSIHn_base> + 1060_H

Value after reset: $0000\ 0000_H$

Bit	31	30	29	28	27	26	25	24	23	22	21	20	19	18	17	16
	CSIHnBRSSx[1:0]		CSIHnPSx[1:0]		CSIHnDLSx[3:0]				—	—	—	—	CSIHnRCBx	CSIHnDIRx	CSIHnCKPx	CSIHnDAPx
Value after reset	0	0	0	0	0	0	0	0	0	0	0	0	0	0	0	0
R/W	R/W	R/W	R/W	R/W	R/W	R/W	R/W	R/W	R	R	R	R	R/W	R/W	R/W	R/W

Bit	15	14	13	12	11	10	9	8	7	6	5	4	3	2	1	0
	CSIHnIDLx	CSIHnIDx[2:0]			CSIHnHDx[3:0]				CSIHnINx[3:0]				CSIHnSPx[3:0]			
Value after reset	0	0	0	0	0	0	0	0	0	0	0	0	0	0	0	0
R/W	R/W	R/W	R/W	R/W	R/W	R/W	R/W	R/W	R/W	R/W	R/W	R/W	R/W	R/W	R/W	R/W

Table 14.28 CSIHnCFGx Register Contents (1/4)

Bit Position	Bit Name	Function
31, 30	CSIHnBRSSx [1:0]	These bits select a baud rate setting register (CSIHnBRSy). **CSIHn BRSSx1 / CSIHn BRSSx0 / Baud Rate Setting Register Selection** 0 / 0: The transfer clock frequency is set according to the CSIHnBRS0 setting. 0 / 1: The transfer clock frequency is set according to the CSIHnBRS1 setting. 1 / 0: The transfer clock frequency is set according to the CSIHnBRS2 setting. 1 / 1: The transfer clock frequency is set according to the CSIHnBRS3 setting. In accordance with the setting of CSIHnCTL2.CSIHnPRS[2:0], the maximum value for setting the transfer clock frequency must be as below. Master mode: PCLK/4 Slave mode: PCLK/6
29, 28	CSIHnPSx[1:0]	Selects the parity for transmitting or receiving chip select signal x. **CSIHn PSx1 / CSIHn PSx0 / Transmission / Reception** 0 / 0 / No parity is transmitted / No parity is expected 0 / 1 / Adds parity bit fixed to 0 / Parity bit is expected but not judged 1 / 0 / Adds odd parity only / Odd parity bit is expected 1 / 1 / Adds even parity / Even parity bit is expected
27 to 24	CSIHnDLSx [3:0]	Selects the data length for chip select signal x. **CSHBAnDLSx[3:0] / Data Length** 0000_B / 16 bits 0001_B / 1 bit 0010_B / 2 bits ... / ... 1111_B / 15 bits **CAUTION** When CSIHnTX0W.CSIHnEDL = 1, the setting of this bit is invalid. (the data length is 16 bits), when CSIHnTX0W.CSIHnEDL = 0, the setting of this bit is valid. Only when the previous transmit data is 16 bits while CSIHnEDL = 1, writing 1 to this bit is enabled.
23 to 20	Reserved	When read, the value after reset is read. When writing, write the value after reset.
19	CSIHnRCBx	Selects the recessive configuration for broadcasting for chip select signal x: 0: Dominant (higher priority) 1: Recessive (lower priority) For details, see **Section 14.5.3.1, Configuration Registers**
18	CSIHnDIRx	Selects the serial data direction of chip select signal x. 0: Data is transmitted/received with MSB first. 1: Data is transmitted/received with LSB first. For details, refer to **Section 14.5.9, Serial Data Direction Selection**.

Table 14.28 CSIHnCFGx Register Contents (2/4)

Bit Position	Bit Name	Function
17	CSIHnCKPx	CSIHnCKPx: Clock phase selection bit CSIHnDAPx: Data phase selection bit
16	CSIHnDAPx	

- CSIHnCTL1.CSIHnCKR = 0

CSIHn CKPx	CSIHn DAPx	Clock and Data Phase Selection
0	0	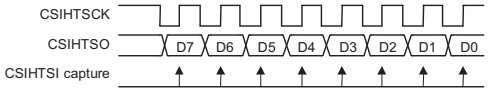
0	1	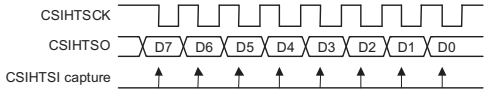
1	0	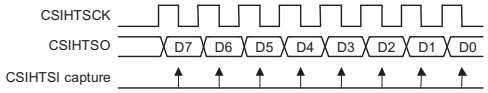
1	1	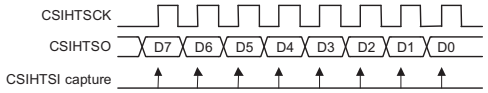

- CSIHnCTL1.CSIHnCKR = 1

CSIHn CKPx	CSIHn DAPx	Clock and Data Phase Selection
0	0	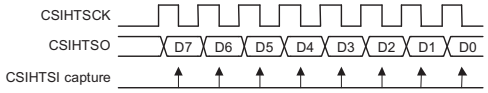
0	1	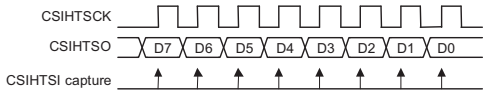
1	×	Setting prohibited

15	CSIHnIDLx	Selects the idle enforcement configuration for chip select x: 0: If the CSIHnTX0W.CSIHnCSx setting of two consecutive transfers is different, an idle state is inserted between two transfers. If the CSIHnTX0W.CSIHnCSx setting of two consecutive transfers is the same, an idle state is not inserted between two transfers. 1: Regardless of the CSIHnTX0W.CSIHnCSx setting of two consecutive transfers, an idle state is inserted between two transfers. This bit is only available in master mode. For details about the forced idle state, see **Section 14.5.15, Enforced Chip Select Idle Setting**.

Table 14.28 CSIHnCFGx Register Contents (3/4)

Bit Position	Bit Name	Function
14 to 12	CSIHnIDx[2:0]	Selects the idle time for chip select signal x.

CSIHnIDx[2:0]	Idle Time
000_B	0.5 transmission clock cycle
001_B	1.0 transmission clock cycle
010_B	1.5 transmission clock cycle
011_B	2.5 transmission clock cycle
100_B	3.5 transmission clock cycle
101_B	4.5 transmission clock cycle
110_B	6.5 transmission clock cycle
111_B	8.5 transmission clock cycle

These bits are only available in master mode.

11 to 8	CSIHnHDx[3:0]	Specifies the hold time for chip select signal x in transmission clock cycles.

CSIHnHDx [3:0]	Hold Time with CSIHnCTL1.CSIHnSIT = 0	Hold Time with CSIHnCTL1.CSIHnSIT = 1
0000_B	0.5 transmission clock cycle	1 transmission clock cycle
0001_B	1.0 transmission clock cycle	1.5 transmission clock cycle
0010_B	1.5 transmission clock cycle	2 transmission clock cycle
0011_B	2.5 transmission clock cycle	3.0 transmission clock cycle
0100_B	3.5 transmission clock cycle	4.0 transmission clock cycle
0101_B	4.5 transmission clock cycle	5.0 transmission clock cycle
0110_B	6.5 transmission clock cycle	7.0 transmission clock cycle
0111_B	8.5 transmission clock cycle	9.0 transmission clock cycle
1000_B	9.5 transmission clock cycle	10.0 transmission clock cycle
1001_B	10.5 transmission clock cycle	11.0 transmission clock cycle
1010_B	11.5 transmission clock cycle	12.0 transmission clock cycle
1011_B	12.5 transmission clock cycle	13.0 transmission clock cycle
1100_B	14.5 transmission clock cycle	15.0 transmission clock cycle
1101_B	16.5 transmission clock cycle	17.0 transmission clock cycle
1110_B	18.5 transmission clock cycle	19.0 transmission clock cycle
1111_B	20.5 transmission clock cycle	21 transmission clock cycle

These bits are only available in master mode.

Table 14.28 CSIHnCFGx Register Contents (4/4)

Bit Position	Bit Name	Function
7 to 4	CSIHnINx[3:0]	Specifies the inter-data time for chip select signal x in transmission clock cycles.

CSIHnINx [3:0]	Inter-data time with CSIHnCTL1.CSIHnSIT = 0	Inter-data time with CSIHnCTL1.CSIHnSIT = 1
0000_B	0.0 transmission clock cycle	0.5 transmission clock cycle
0001_B	0.5 transmission clock cycle	1.0 transmission clock cycle
0010_B	1.0 transmission clock cycle	1.5 transmission clock cycle
0011_B	2.0 transmission clock cycle	2.5 transmission clock cycle
0100_B	3.0 transmission clock cycle	3.5 transmission clock cycle
0101_B	4.0 transmission clock cycle	4.5 transmission clock cycle
0110_B	6.0 transmission clock cycle	6.5 transmission clock cycle
0111_B	8.0 transmission clock cycle	8.5 transmission clock cycle
1000_B	9.0 transmission clock cycle	9.5 transmission clock cycle
1001_B	10.0 transmission clock cycle	10.5 transmission clock cycle
1010_B	11.0 transmission clock cycle	11.5 transmission clock cycle
1011_B	12.0 transmission clock cycle	12.5 transmission clock cycle
1100_B	14.0 transmission clock cycle	14.5 transmission clock cycle
1101_B	16.0 transmission clock cycle	16.5 transmission clock cycle
1110_B	18.0 transmission clock cycle	18.5 transmission clock cycle
1111_B	20.0 transmission clock cycle	20.5 transmission clock cycle

These bits are only available in master mode.

3 to 0	CSIHnSPx[3:0]	Specifies the setup time for chip select signal x in transmission clock cycles.

CSIHnSPx[3:0]	Setup time
0000_B	0.5 transmission clock cycle
0001_B	1 transmission clock cycle
0010_B	1.5 transmission clock cycle
0011_B	2.5 transmission clock cycle
0100_B	3.5 transmission clock cycle
0101_B	4.5 transmission clock cycle
0110_B	6.5 transmission clock cycle
0111_B	8.5 transmission clock cycle
1000_B	9.5 transmission clock cycle
1001_B	10.5 transmission clock cycle
1010_B	11.5 transmission clock cycle
1011_B	12.5 transmission clock cycle
1100_B	14.5 transmission clock cycle
1101_B	16.5 transmission clock cycle
1110_B	18.5 transmission clock cycle
1111_B	20.5 transmission clock cycle

These bits are only available in master mode.

CAUTION

For the setting of this register, refer to **Table 14.35, Notes on Setting Registers**.

14.3.12 CSIHnTX0W — CSIHn Transmit Data Register 0 for Word Access

This register stores transmission data. In addition, it specifies the communication interrupt request, the end-of-job, the extended data length, and the chip select activation.

Access: This register can be read/written in 32-bit units.

Address: <CSIHn_base> + 1008_H

Value after reset: $X0XX\ XXXX_H$

Bit	31	30	29	28	27	26	25	24	23	22	21	20	19	18	17	16
	CSIHn CIRE	CSIHn EOJ	CSIHn EDL	—	—	—	—	—	CSIHn CS7	CSIHn CS6	CSIHn CS5	CSIHn CS4	CSIHn CS3	CSIHn CS2	CSIHn CS1	CSIHn CS0
Value after reset	—	—	—	0	0	0	0	0	—	—	—	—	—	—	—	—
R/W	R/W	R/W	R/W	R	R	R	R	R	R/W	R/W	R/W	R/W	R/W	R/W	R/W	R/W

Bit	15	14	13	12	11	10	9	8	7	6	5	4	3	2	1	0
	CSIHnTX[15:0]															
Value after reset	—	—	—	—	—	—	—	—	—	—	—	—	—	—	—	—
R/W	R/W	R/W	R/W	R/W	R/W	R/W	R/W	R/W	R/W	R/W	R/W	R/W	R/W	R/W	R/W	R/W

Table 14.29 CSIHnTX0W Register Contents (1/2)

Bit position	Bit name	Function
31	CSIHnCIRE	Enables the communication interrupt request INTCSIHnIC in dual buffer or transmit-only buffer mode, or the job completion interrupt INTCSIHnIJC request in FIFO mode. 0: No interrupt is requested. 1: An interrupt is requested. Generates interrupt INTCSIHnIC or INTCSIHnIJC after transmission. For details, see **Section 14.4.3, INTCSIHnIC (Communication Status Interrupt)** and **Section 14.4.6, INTCSIHnIJC (Job Completion Interrupt)**. **CAUTION** This bit is only valid when job mode is enabled (CSIHnCTL1.CSIHnJE = 1).
30	CSIHnEOJ	Specifies the end of a job. 0: Indicates that the job does not end. The job continues. 1: Indicates end-of-job data. **CAUTION** This bit is only valid when job mode is enabled (CSIHnCTL1.CSIHnJE = 1). This bit must be set to 0 in slave mode.
29	CSIHnEDL	Specifies whether the associated data requires the extended data length (EDL) option. 0: Normal operation 1: Enables the extended data length. The associated data is transmitted as a 16-bit packet. No inter-data time or idle time will be inserted after the data is transmitted. If CSIHnCTL1.CSIHnEDLE = 1 and CSIHnTX0W.CSIHnEDL = 1, the same CS must be selected for subsequent data. If CS is modified for the subsequent data, the correct operation is not assured. **CAUTION** This bit is only available if CSIHnCTL1.CSIHnEDLE = 1.
28 to 24	Reserved	When read, the value after reset is read. When writing, write the value after reset.

Table 14.29 CSIHnTX0W Register Contents (2/2)

Bit position	Bit name	Function
23 to 16	CSIHnCS[7:0]	Activates one or several chip select signals. 0: Activates chip select signal x for the associated transmission. 1: Deactivates chip select signal x for the associated transmission. Setting CSIHnTX0W.CSIHnCS[7:0] = FF_H is prohibited. **CAUTION** If several chip select signals are enabled for broadcasting, the configuration of one with CSIHnCFGx.CSIHnRCBx = 0 (dominant) is used. In this case, all dominant chip select signals must be set to precisely the same value. In slave mode, set the CSIHnCS[7:0] bit to FE_H.
15 to 0	CSIHnTX[15:0]	Stores the transmission data.

CAUTION

For the setting of this register, refer to **Table 14.35, Notes on Setting Registers**.

14.3.13 CSIHnTX0H — CSIHn Transmit Data Register 0 for Half Word Access

This register stores the transmission data. This register is the same as bits 15 to 0 of register CSIHnTX0W.

The upper 16 bits of CSIHnTX0W are applied for transfer. Set transmit data to CSIHnTX0W before using this register because the value of CSIHnTX0W is undefined after the reset.

Access: This register can be read/written in 16-bit units.

Address: <CSIHn_base> + $100C_H$

Value after reset: Undefined

Bit	15	14	13	12	11	10	9	8	7	6	5	4	3	2	1	0
	CSIHnTX[15:0]															
Value after reset	—	—	—	—	—	—	—	—	—	—	—	—	—	—	—	—
R/W	R/W	R/W	R/W	R/W	R/W	R/W	R/W	R/W	R/W	R/W	R/W	R/W	R/W	R/W	R/W	R/W

Table 14.30 CSIHnTX0H Register Contents

Bit position	Bit name	Function
15 to 0	CSIHnTX[15:0]	Stores the transmission data.

CAUTION

For the setting of this register, refer to **Table 14.35, Notes on Setting Registers**.

14.3.14 CSIHnRX0W — CSIHn Receive Data Register 0 for Word Access

This register stores the received data.

Access: This register can only be read in 32-bit units.

Address: <CSIHn_base> + 1010_H

Value after reset: $0XXX\ XXXX_H$

Bit	31	30	29	28	27	26	25	24	23	22	21	20	19	18	17	16
	—	—	—	—	—	—	CSIHn RPE	CSIHn TDCE	CSIHn CS7	CSIHn CS6	CSIHn CS5	CSIHn CS4	CSIHn CS3	CSIHn CS2	CSIHn CS1	CSIHn CS0
Value after reset	0	0	0	0	0	0	—	—	—	—	—	—	—	—	—	—
R/W	R	R	R	R	R	R	R	R	R	R	R	R	R	R	R	R

Bit	15	14	13	12	11	10	9	8	7	6	5	4	3	2	1	0
	CSIHnRX[15:0]															
Value after reset	—	—	—	—	—	—	—	—	—	—	—	—	—	—	—	—
R/W	R	R	R	R	R	R	R	R	R	R	R	R	R	R	R	R

Table 14.31 CSIHnRX0W Register Contents

Bit position	Bit name	Function
31 to 26	Reserved	When read, the value after reset is read.
25	CSIHnRPE	Indicates whether a reception data parity error was detected. 0: No parity error was detected on the associated reception data. 1: A parity error was detected on the associated reception data.
24	CSIHnTDCE	Indicates whether a transmission data consistency check error was detected. 0: No consistency check error was detected on the associated transmission data. 1: A consistency check error was detected on the associated transmission data.
23 to 16	CSIHnCSx (x = 7 to 0)	Indicates which chip select signal was activated. 0: Chip select signal x is active for the associated reception. 1: Chip select signal x is inactive for the associated reception.
15 to 0	CSIHnRX[15:0]	Stores the received data.

NOTE

This register stores the received data when an INTCSIHnIR interrupt is generated. Read the received data stored in this register before generation of an INTCSIHnIR interrupt. Otherwise the data is rewritten with the next received data.

CAUTION

For the setting of this register, refer to **Table 14.35, Notes on Setting Registers**.

14.3.15 CSIHnRX0H — CSIHn Receive Data Register 0 for Half Word Access

This register stores the received data. This register is the same as bits 15 to 0 of register CSIHnRX0W.

Access: This register can be read only in 16-bit units.

Address: <CSIHn_base> + 1014_H

Value after reset: Undefined

Bit	15	14	13	12	11	10	9	8	7	6	5	4	3	2	1	0
	CSIHnRX[15:0]															
Value after reset	—	—	—	—	—	—	—	—	—	—	—	—	—	—	—	—
R/W	R	R	R	R	R	R	R	R	R	R	R	R	R	R	R	R

Table 14.32 CSIHnRX0H Register Contents

Bit position	Bit name	Function
15 to 0	CSIHnRX[15:0]	Stores the received data.

NOTE

This register stores the received data when an INTCSIHnIR interrupt is generated. Read the received data stored in this register before generation of an INTCSIHnIR interrupt. Otherwise the data is rewritten with the next received data.

CAUTION

For the setting of this register, refer to **Table 14.35, Notes on Setting Registers**.

14.3.16 CSIHnBRSy — CSIHn Baud Rate Setting Register y (y = 0 to 3)

This register sets the transfer clock frequency for each chip select signal.

With CSIHnCFG0-7.CSIHnBRSSx[1:0] bits, one of the four types of transfer clock frequency settings can be selected for each chip select signal. For details of transfer clock frequency settings, see **Section 14.5.5, Transmission Clock Selection**.

Access: This register can be read/written in 16-bit units.

Address: CSIHnBRS0: <CSIHn_base> + 1068_H
CSIHnBRS1: <CSIHn_base> + $106C_H$
CSIHnBRS2: <CSIHn_base> + 1070_H
CSIHnBRS3: <CSIHn_base> + 1074_H

Value after reset: 0000_H

Bit	15	14	13	12	11	10	9	8	7	6	5	4	3	2	1	0
	—	—	—	—	CSIHnBRS[11:0]											
Value after reset	0	0	0	0	0	0	0	0	0	0	0	0	0	0	0	0
R/W	R	R	R	R	R/W	R/W	R/W	R/W	R/W	R/W	R/W	R/W	R/W	R/W	R/W	R/W

Table 14.33 CSIHnBRSy Register Contents

Bit Position	Bit Name	Function
15 to 12	Reserved	When read, the value after reset is read. When writing, write the value after reset.
11 to 0	CSIHnBRS [11:0]	0: BRG stopped 1: PCLK / (2^{α} × 1 × 2) 2: PCLK / (2^{α} × 2 × 2) 3: PCLK / (2^{α} × 3 × 2) 4: PCLK / (2^{α} × 4 × 2) . . . 4095: PCLK / (2^{α} × 4095 × 2) α is the value of CSIHnCTL2.CSIHnPRS[2:0].

CAUTION

For the setting of this register, refer to **Table 14.35, Notes on Setting Registers**.

14.3.17 SELCSIHDMA — CSIH DMA Select Register

This register controls the generation condition for the interrupt and the DMA/DTS trigger.

Access: This register can be read/written in 8-bit units.

Address: <CSIH0_base> + $E000_H$

Value after reset: 00_H

Bit	7	6	5	4	3	2	1	0
	—	—	—	—	SELCSI1DR	SELCSI1DC	SELCSI0DR	SELCSI0DC
Value after reset	0	0	0	0	0	0	0	0
R/W	R	R	R	R	R/W	R/W	R/W	R/W

Table 14.34 SELCSIHDMA Register Contents

Bit Position	Bit Name	Function
7 to 4	Reserved	When read, the value after reset is read. When writing, write the value after reset.
3	SELCSI1DR	Controls the generation condition for the INTCSIH1IR0S interrupt and the DMA/DTS trigger. 0: INTCSIH1IR0S interrupt and DMA/DTS trigger can be generated regardless the CS0 setting. 1: INTCSIH1IR0S interrupt and DMA/DTS trigger can be generated only when CS0 is active.
2	SELCSI1DC	Controls the generation condition for the INTCSIH1IC0S interrupt and the DMA/DTS trigger. 0: INTCSIH1IC0S interrupt and DMA/DTS trigger can be generated regardless the CS0 setting. 1: INTCSIH1IC0S interrupt and DMA/DTS trigger can be generated only when CS0 is active.
1	SELCSI0DR	Controls the generation condition for the INTCSIH0IR0S interrupt and the DMA/DTS trigger. 0: INTCSIH0IR0S interrupt and DMA/DTS trigger can be generated regardless the CS0 setting. 1: INTCSIH0IR0S interrupt and DMA/DTS trigger can be generated only when CS0 is active.
0	SELCSI0DC	Controls the generation condition for the INTCSIH0IC0S interrupt and the DMA/DTS trigger. 0: INTCSIH0IC0S interrupt and DMA/DTS trigger can be generated regardless the CS0 setting. 1: INTCSIH0IC0S interrupt and DMA/DTS trigger can be generated only when CS0 is active.

Figure 14.2 shows a functional overview of the CSIHn (n = 0, 1) that is connected to the DMA/DTS and the interrupt controller.

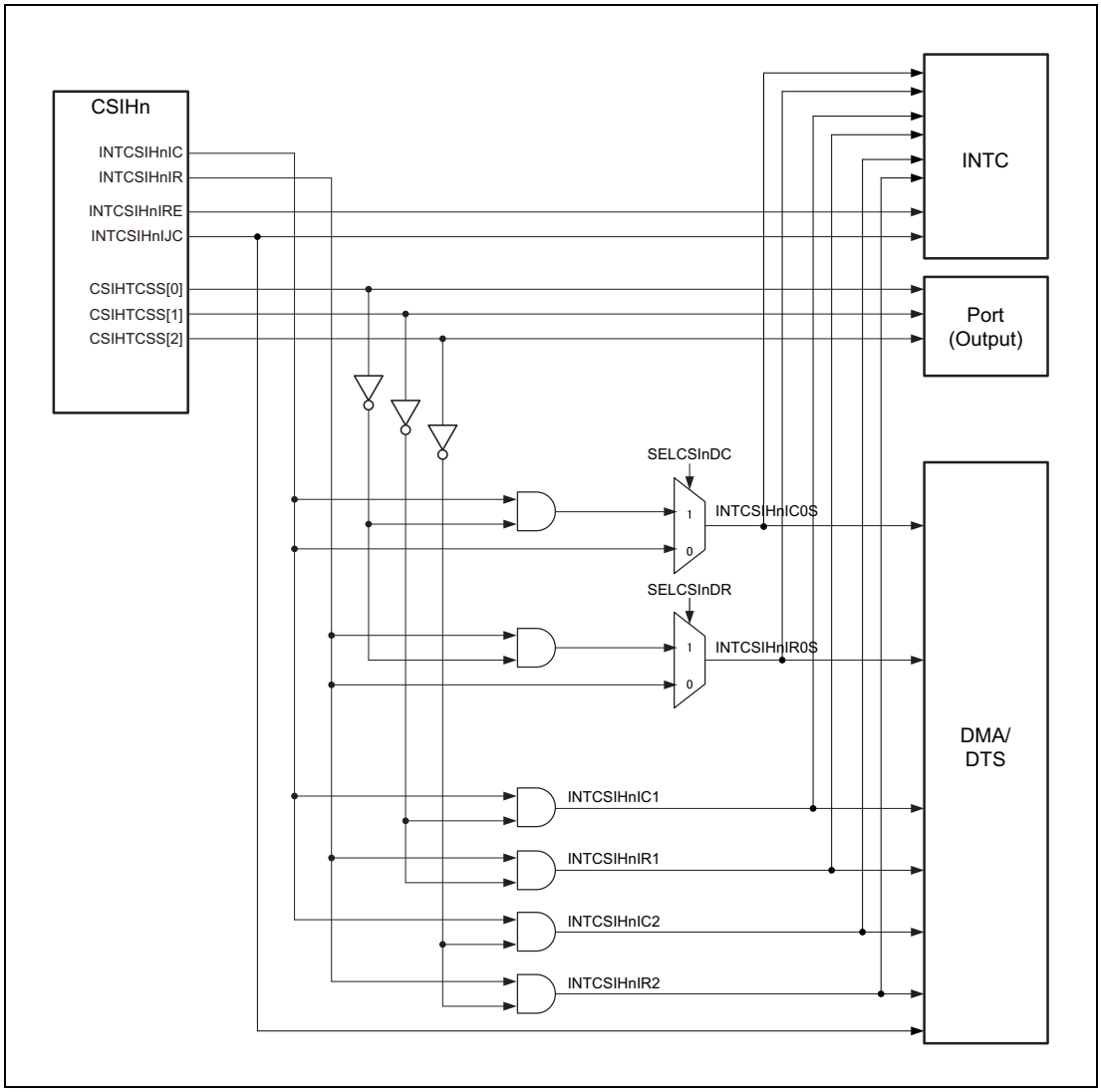

Figure 14.2 Block Diagram Showing the Connection of the Interrupt Controller, DMA/DTC, and CSIHn (n = 0, 1)

14.3.18 List of Caution

Table 14.35 Notes on Setting Registers (1/3)

Register	Bit	Content
CSIHnCTL0	CSIHnPWR	If this bit is cleared during communication, ongoing communication is suspended. After cancelling the suspension, the communication must be restarted.
CSIHnCTL0	CSIHnTXE CSIHnRXE	Do not modify any of these bits while CSIHnCTL0.CSIHnPWR = 0. (These bits can be modified at the same time as the CSIHnCTL0.CSIHnPWR bit.) Do not modify these bits while CSIHnSTR0.CSIHnTSF = 1, because the specified operation is not guaranteed if ongoing communication is suspended.
CSIHnCTL0	CSIHnJOBE	Do not modify this bit while CSIHnCTL0.CSIHnPWR = 0. This bit is only valid when CSIHnCTL1.CSIHnJE = 1. Setting this bit is prohibited in slave mode.
CSIHnCTL0	CSIHnMBS	Do not modify this bit while CSIHnCTL0.CSIHnPWR = 0. (This bit can modify at the same time as the CSIHnCTL0.CSIHnPWR bit.) Modification of this bit is only allowed while CSIHnSTR0.CSIHnTSF = 0. Do not modify of "FIFO mode <-> Direct access mode" while CSIHnCTL0.CSIHnPWR = 1. When the CPU-controlled high-priority communication function is enabled, the operation is the same as that in direct access mode regardless of the CSIHnMBS bit setting.
CSIHnCTL1	CSIHnCKR	Modification of this bit is only allowed while CSIHnCTL0.CSIHnPWR = 0. If CS is not used, use this bit instead of the CSIHnCFGx.CSIHnCKPx bit and set CSIHnCFGx.CSIHnCKPx to 0. This bit must be used in slave mode.
CSIHnCTL1	CSIHnSLIT CSIHnCSL[7:0] CSIHnEDLE CSIHnDCS CSIHnCSRI CSIHnHSE	Modification of these bits is only permitted while CSIHnCTL0.CSIHnPWR = 0.
CSIHnCTL1	CSIHnPHE CSIHnJE CSIHnLBM	Modification of these bits is only permitted while CSIHnCTL0.CSIHnPWR = 0. Setting of this bit is prohibited in slave mode.
CSIHnCTL1	CSIHnSSE	Modification of this bit is only permitted while CSIHnCTL0.CSIHnPWR = 0. Setting of this bit is prohibited in master mode.
CSIHnCTL1	CSIHnSIT	Modification of this bit is only permitted while CSIHnCTL0.CSIHnPWR = 0. This bit is only valid in master mode. In slave mode, no delay is generated.
CSIHnCTL2	CSIHnPRS[2:0]	Modification of this bit is only permitted while CSIHnCTL0.CSIHnPWR = 0. Setting of the maximum transfer clock frequency is shown below. • Master mode: 10 MHz (PCLK/4 or less) • Slave mode: 6.66 MHz (PCLK/6 or less)
CSIHnSTR0	CSIHnSRP[7:0] CSIHnSPF[7:0] CSIHnFLF CSIHnEMF CSIHnTSF	Writing these bits is prohibited, and only reading is permitted.
CSIHnSTR0	CSIHnTMOE CSIHnOFE CSIHnDCE CSIHnPE CSIHnOVE	Writing these bits is prohibited, and only reading is permitted. These bits are initialized when CSIHnCTL0.CSIHnPWR = 0 → 1 or CSIHnCTL0.CSIHnPWR = 1 → 0.
CSIHnSTCR0	CSIHnPCT	Setting this bit to 1 during data transfer stops the transfer, and the interface waits for the next transfer. Setting this bit to 1 during waiting time (setup time, hold time, idle time, or inter-data time), insertion of the waiting time is cancelled and the interface waits for the next transfer.
CSIHnMCTL0	CSIHnMMS[1:0]	Modification of these bits is only allowed while CSIHnCTL0.CSIHnPWR = 0 and CSIHnCTL0.CSIHnMBS = 0.

Table 14.35 Notes on Setting Registers (2/3)

Register	Bit	Content
CSIHnMCTL0	CSIHnTO[4:0]	Modification of these bits is only allowed while CSIHnCTL0.CSIHnPWR = 0. Set these bits to 0 in master mode. Set these bits to 0 in direct access, dual buffer, and transmit-only buffer mode.
CSIHnMCTL1	CSIHnFES[6:0] CSIHnFFS[6:0]	Write to these bits during communication is permitted.
CSIHnMCTL2	CSIHnBTST CSIHnND[7:0] CSIHnSOP[6:0]	Writing these bits is prohibited when CSIHnCTL0.CSIHnPWR = 0. Writing these bits is prohibited when CSIHnCTL0.CSIHnTXE = CSIHnCTL0.CSIHnRXE = 0. Writing these bits is prohibited when CSIHnSTR0.CSIHnTSF = 1. Writing these bits is prohibited in direct access or FIFO mode.
CSIHnMRWP0	CSIHnRRA[6:0]	Write to these bits during communication is permitted. Writing these bits is prohibited in direct access or FIFO mode. When writing is required in transmit only buffer mode, set “0000_H” to these bits.
CSIHnMRWP0	CSIHnTRWA[6:0]	Write to these bits during communication is permitted. Writing these bits is prohibited in direct access or FIFO mode.
CSIHnCFGx x = 0 to 7	CSIHnBRSSx[1:0] CSIHnRCBx CSIHnIDLx CSIHnIDx[2:0] CSIHnHDx[3:0] CSIHnINx[3:0] CSIHnSPx[3:0]	Modification of these bits is only allowed while CSIHnCTL0.CSIHnPWR = 0. These bits must be set to 0 in slave mode.
CSIHnCFGx x = 0 to 7	CSIHnPSx[1:0] CSIHnDLSx[3:0] CSIHnDIRx CSIHnDAPx	Modification of these bits is only allowed while CSIHnCTL0.CSIHnPWR = 0. In slave mode, the CSIHnCFG0 setting is used for the configuration. Therefore, all the bits in CSIHnCFG1 to CSIHnCFG7 must be set to 0.
CSIHnCFGx x = 0 to 7	CSIHnCKPx	Modification of this bit is only allowed while CSIHnCTL0.CSIHnPWR = 0. As CSIHnCTL1.CSIHnCKR must be used, set this bit to 0 in slave mode. If CS is not used, use this bit instead of the CSIHnCTL1.CSIHnCKR bit, and clear this bit to 0.
CSIHnTX0W	CSIHnEOJ CSIHnCIRE	This bit is only valid when CSIHnCTL1.CSIHnJE = 1. While CSIHnCTL1.CSIHnJE = 0, the value of this bit is ignored even if 1 is read. Set these bits to 0 in slave mode.
CSIHnTX0W	CSIHnEDL	This bit is only valid when CSIHnCTL1.CSIHnEDLE = 1. While CSIHnCTL1.CSIHnEDLE = 0, the value of this bit is ignored even if 1 is read.
CSIHnTX0W	CSIHnCS[7:0]	In master mode, setting these bits to “FF_H” is prohibited. In slave mode, setting these bits to “FE_H” is prohibited.
CSIHnTX0W CSIHnTX0H		Reading to these bits during communication is prohibited in FIFO mode. While CSIHnCTL0.CSIHnPWR = 0 in FIFO mode, reading these bits is prohibited. While CSIHnCTL0.CSIHnTXE = CSIHnCTL0.CSIHnRXE = 0, writing to these bits are prohibited in direct access mode.
CSIHnRX0W		These bits are initialized when CSIHnCTL0.CSIHnPWR = 0 → 1 or CSIHnCTL0.CSIHnPWR = 1 → 0. While CSIHnCTL0.CSIHnPWR = 0, reading and writing to these bits is prohibited in FIFO mode. While CSIHnCTL0.CSIHnPWR = 0, writing and reading to these bits is valid in direct access, dual buffer, and transmit-only buffer mode. While CSIHnCTL0.CSIHnPWR = 1, writing to these bits is invalid and reading to these bits is valid.

Table 14.35 Notes on Setting Registers (3/3)

Register	Bit	Content
CSIHnRX0H		These bits are initialized when CSIHnCTL0.CSIHnPWR = 0 → 1 or CSIHnCTL0.CSIHnPWR = 1 → 0. While CSIHnCTL0.CSIHnPWR = 0, reading and writing to these bits is prohibited in FIFO mode. While CSIHnCTL0.CSIHnPWR = 1, writing to these bits is invalid and reading to these bits is valid in FIFO mode. Writing to these bits invalid and reading to these bits is valid in direct access, dual buffer, and transmit-only buffer mode.
CSIHnBRSy y = 0 to 3		Modification of this bit is only permitted while CSIHnCTL0.CSIHnPWR = 0.

14.4 Interrupt Sources

CSIH can generate the following interrupt requests:

- INTCSIHnIC (communication interrupt)
- INTCSIHnIR (reception interrupt)
- INTCSIHnIRE (error interrupt)
- INTCSIHnIJC (job completion interrupt)

14.4.1 Overview

The error interrupt INTCSIHnIRE is generated when an error is detected. The generation of the other interrupts depends on the memory mode, the job mode, and – in case of the job completion interrupt INTCSIHnIJC – also the operating mode.

The job completion interrupt INTCSIHnIJC is only generated when job mode is enabled (CSIHnCTL1.CSIHnJE = 1). It is not available in slave mode.

The following table gives an overview.

Table 14.36 Interrupt Generation

Memory mode	Interrupt	Cause of Interrupt	
		Job Mode Disabled CSIHnCTL1.CSIHnJE = 0	**Job Mode Enabled CSIHnCTL1.CSIHnJE = 1**
FIFO	INTCSIHnIC	Tx data empty*1 Excluding job abortion*4	Tx data empty*1 Excluding job abortion*4
	INTCSIHnIR	Rx data full*2 *and* CSIHnCTL0.CSIHnRXE = 1	Rx data full*2 *and* CSIHnCTL0.CSIHnRXE = 1
	INTCSIHnIRE	Error detected	Error detected
	INTCSIHnIJC*3	Not applicable	CSIHnTX0W.CSIHnCIRE = 1 (When Tx data is not empty), or job abortion*4
Transmit-only buffer	INTCSIHnIC	End of communication	CSIHnTX0W.CSIHnCIRE = 1 and (CSIHnCTL0.CSIHnJOBE = 0 or CSIHnTX0W.CSIHnEOJ = 0)
	INTCSIHnIR	Data received *and* CSIHnCTL0.CSIHnRXE = 1	Data received *and* CSIHnCTL0.CSIHnRXE = 1
	INTCSIHnIRE	Error detected	Error detected
	INTCSIHnIJC*3	Not applicable	Job abortion*4
Dual buffer	INTCSIHnIC	End of communication	CSIHnTX0W.CSIHnCIRE = 1 and (CSIHnCTL0.CSIHnJOBE = 0 or CSIHnTX0W.CSIHnEOJ = 0)
	INTCSIHnIR	End of communication and CSIHnCTL0.CSIHnRXE = 1	Data received *and* CSIHnCTL0.CSIHnRXE = 1
	INTCSIHnIRE	Error detected	Error detected
	INTCSIHnIJC*3	Not applicable	Job abortion*4
Direct access	INTCSIHnIC	One data transfer	One data transfer (Excluding job abortion*4)
	INTCSIHnIR	Data received *and* CSIHnCTL0.CSIHnRXE = 1	Data received *and* CSIHnCTL0.CSIHnRXE = 1
	INTCSIHnIRE	Error detected	Error detected
	INTCSIHnIJC*3	Not applicable	Job abortion*4

Note 1. “Tx data empty” refers to the FIFO fill level, defined by CSIHnMCTL1.CSIHnFES[6:0].

Note 2. "Rx data full" refers to the FIFO fill level, defined by CSIHnMCTL1.CSIHnFFS[6:0].
Note 3. INTCSIHnIJC is not available in slave mode.
Note 4. Job abortion condition: CSIHnTX0W.CSIHnEOJ = 1 *and* CSIHnCTL0.CSIHnJOBE = 1
Same operation as direct access mode is performed during high-priority communication in transmit-only buffer mode.

14.4.2 Interrupt Delay

In master mode, all interrupts generated by the master can be delayed by one half period of the transmission clock, CSIHTSCK. This is not possible in slave mode.

The delay is specified by setting CSIHnCTL1.CSIHnSIT = 1 (the setting of the CSIGnSIT bit is invalid in slave mode).

The following example illustrates the interrupt delay function, assuming a setting of CSIHnCTL1.CSIHnSIT = 1 (interrupt delay enabled), CSIHnCFGx.CSIHnCKPx = 0, CSIHnCFGx.CSIHnDAPx = 0 (clock and data phase), and CSIHnCFGx.CSIHnDLSx[3:0] = 1000_B (data length 8 bits).

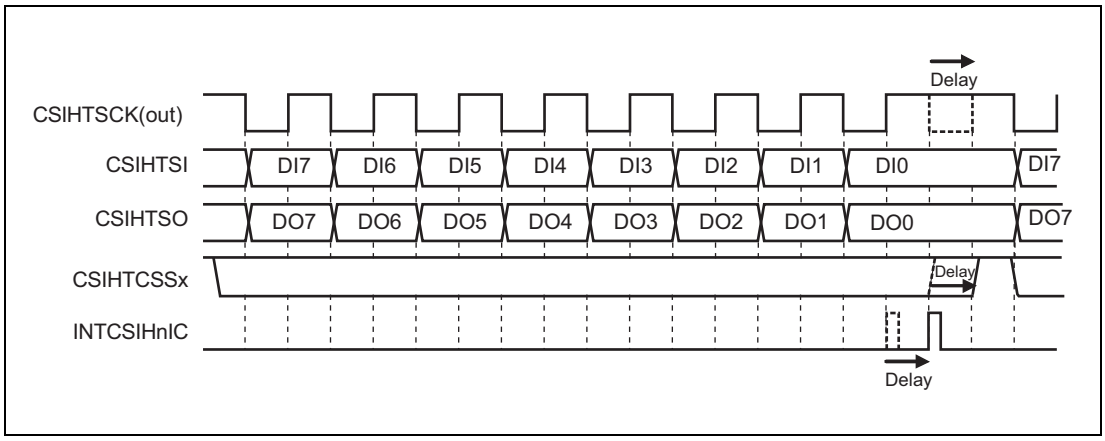

Figure 14.3 Interrupt Delay Function (CSIHnCTL1.CSIHnSIT = 1)

Setting CSIHnCTL1.CSIHnSIT = 1 adds half period delay to the transmission clock. This delays also the end of the present chip select signal (CSIHTCSSx).

14.4.3 INTCSIHnIC (Communication Status Interrupt)

Depending on the memory mode and the job mode, this interrupt is generated according to the conditions shown in the following table.

Table 14.37 INTCSIHnIC Interrupt Generation

Memory Mode	Cause of Interrupt	
	Job Mode Disabled CSIHnCTL1.CSIHnJE = 0	**Job Mode Enabled CSIHnCTL1.CSIHnJE = 1**
FIFO	This interrupt is generated when transmission data is about to be missing in the FIFO, indicating to the application that new data should be added. INTCSIHnIC is generated, if the number of data to be transmitted remaining in the FIFO (CSIHnSTR0.CSIHnSPF[7:0]) equals CSIHnMTCL1.CSIHnFES[6:0].	In the same way as when JE = 0, this interrupt is generated when the number of transmission data CSIHnSTR0.CSIHnSPF[7:0] remaining in the FIFO equals the CSIHnMCTL1.CSIHnFES[6:0] value, but this interrupt is not generated when job is aborted.
Transmit-only buffer, dual buffer	Generated at the end of communication. (Specified by the CSIHnMTLC2.CSIHnND[7:0] bit)	Generated when data with CSIHnTX0W.CSIHnCIRE = 1 is transmitted. Note that if data with CSIHnTX0W.CSIHnCIRE = 1 and job abortion*1 are transmitted, the INTCSIHnIJC interrupt is generated instead of INTCSIHnIC.
Direct access	Generated after every data transfer.	Generated after every data transfer, except when the communication was aborted.

Note 1. Job abortion condition: CSIHnTX0W.CSIHnEOJ = 1 and CSIHnCTL0.CSIHnJOBE = 1.
Same operation as direct access mode is performed during high-priority communication in transmit-only buffer mode.

14.4.3.1 INTCSIHnIC in Direct Access Mode

The examples below show the INTCSIHnIC behavior in direct access mode.

The examples assume:

- Master mode
- Direct access mode
- No interrupt delay (CSIHnCTL1.CSIHnSIT = 0)
- Normal clock and data phase (CSIHnCFGx.CSIHnCKPx = 0, CSIHnCFGx.CSIHnDAPx = 0)
- Data length 8 bits (CSIHnCFGx.CSIHnDLSx[3:0] = 1000_B)
- Normal INTCSIHnIC interrupt timing (CSIHnCTL1.CSIHnSLIT = 0)

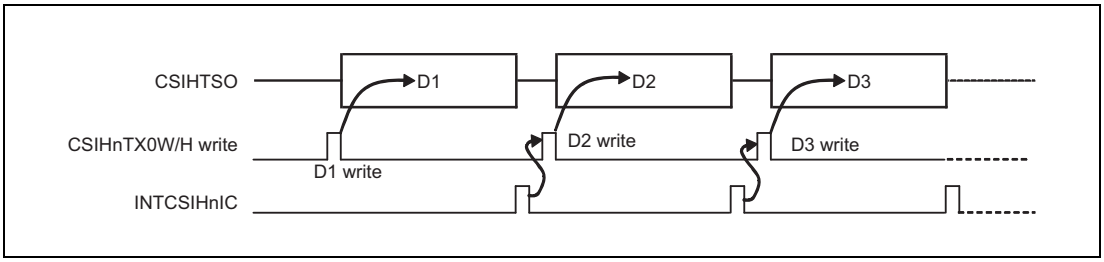

Figure 14.4 Generation of INTCSIHnIC after Transfer (CSIHnCTL1.CSIHnSLIT = 0)

If job mode is enabled (CSIHnCTL1.CSIHnJE = 1) and a job ends because data is transmitted with CSIHnTXOW.CSIHnEOJ= 1 and communication stop is requested (CSIHnCTL0.CSIHnJOBE = 1), then INTCSIHnIC is replaced by the job completion interrupt INTCSIHnIC.

INTCSIHnIC can also be set up to occur as soon as the CSIHnTX0W/H register is free for the next data. This is specified by setting CSIHnCTL1.CSIHnSLIT = 1.

The effect is illustrated in the figure below.

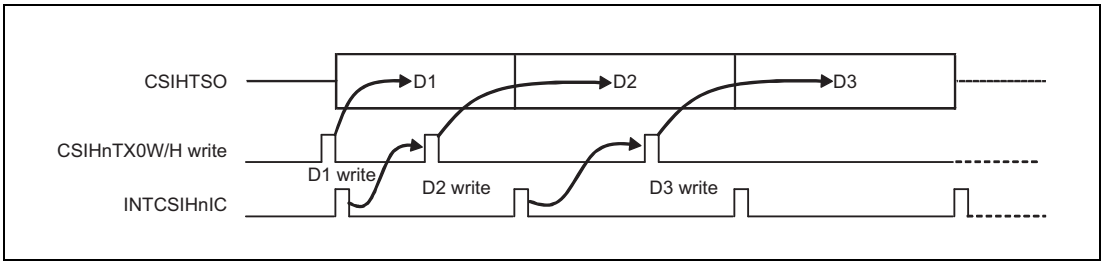

Figure 14.5 Immediate Generation of INTCSIHnIC (CSIHnCTL1.CSIHnSLIT = 1)

Thus, the new data can be written in advance.

NOTE

Same operation as direct access mode is performed during high-priority communication in transmit-only buffer mode.

14.4.3.2 INTCSIHnIC in FIFO Mode

The example below shows the INTCSIHnIC behavior in FIFO mode.

The example assumes:

- Master mode
- FIFO mode
- No interrupt delay (CSIHnCTL1.CSIHnSIT = 0)
- Normal clock and data phase
  (CSIHnCFGx.CSIHnCKPx = 0, CSIHnCFGx.CSIHnDAPx = 0)
- Data length 8 bits (CSIHnCFGx.CSIHnDLSx[3:0] = 1000_B)

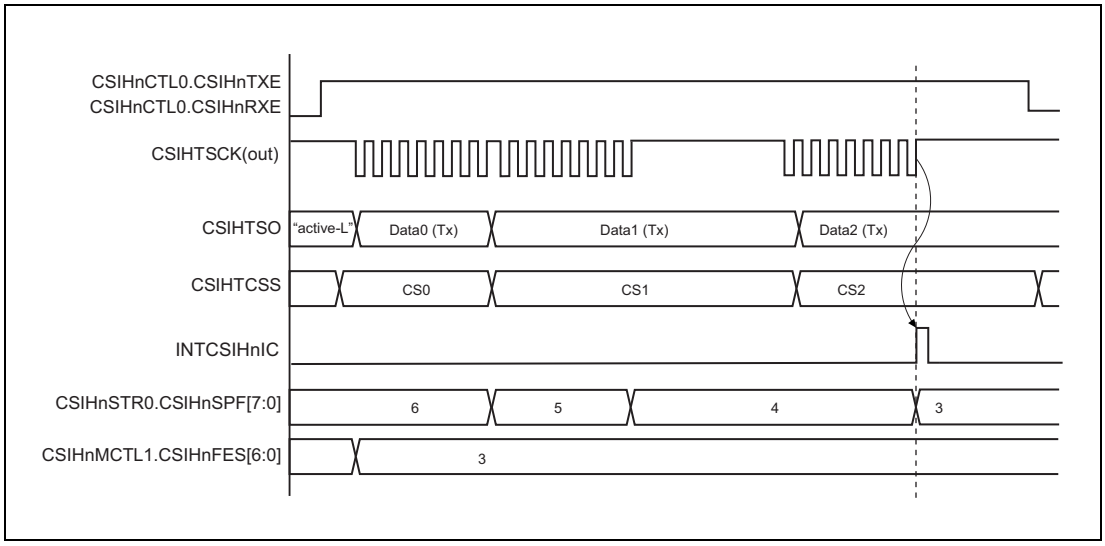

Figure 14.6 Generation of INTCSIHnIC in FIFO Memory Mode

The condition for "FIFO empty" is specified in CSIHnMCTL1.CSIHnFES[6:0]. In the example of the diagram above, the number of untransmitted data in FIFO is set to 3. CSIHnSTR0.CSIHnSPF[7:0] indicates the number of untransmitted data. When both match, the interrupt INTCSIHnIC occurs.

14.4.3.3 INTCSIHnIC in Job Mode

The example below shows the INTCSIHnIC behavior in job mode.

The example assumes:

- Master mode
- Job mode enabled (CSIHnCTL1.CSIHnJE = 1)
- No interrupt delay (CSIHnCTL1.CSIHnSIT = 0)
- Normal clock and data phase (CSIHnCFGx.CSIHnCKPx = 0, CSIHnCFGx.CSIHnDAPx = 0)
- Data length 8 bits (CSIHnCFGx.CSIHnDLSx[3:0] = 1000_B)
- Normal INTCSIHnIC interrupt timing (CSIHnCTL1.CSIHnSLIT = 0)

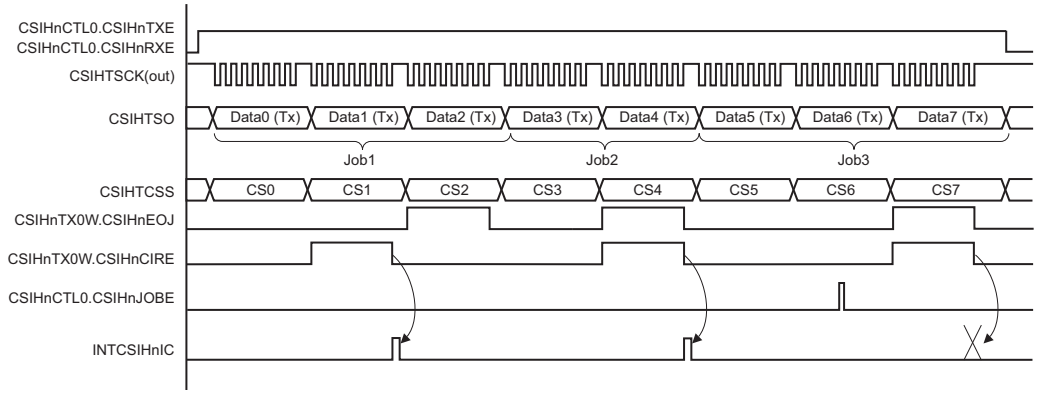

Figure 14.7 Generation of INTCSIHnIC in Job Mode

The rules for generating INTCSIHnIC in job mode are shown in the following table.

Table 14.38 Generation of INTCSIHnIC in Job Mode

CSIHnTX0W. CSIHnEOJ	CSIHnTX0W. CSIHnCIRE	INTCSIHnIC
0	0	Not generated
0	1	Generated
1	0	Not generated
1	1	CSIHnCTL0.CSIHnJOBE = 0: Generated
		CSIHnCTL0.CSIHnJOBE = 1: Not generated, replaced by interrupt INTCSIHnIJC

14.4.4 INTCSIHnIR (Receive Status Interrupt)

Depending on the memory mode and the job mode, this interrupt is generated according to the conditions below.

Table 14.39 INTCSIHnIR Interrupt Generation

Memory Mode	Cause of Interrupt CSIHnCTL0.CSIHnRXE = 1 Job Mode Disabled CSIHnCTL1.CSIHnJE = 0	Cause of Interrupt CSIHnCTL0.CSIHnRXE = 1 Job Mode Enabled CSIHnCTL1.CSIHnJE = 1
FIFO	This interrupt occurs when the FIFO buffer is almost full with received data while CSIHnCTL0.CSIHnRXE = 1, notifying the application that the FIFO must be emptied. INTCSIHnIR is generated, if the number of received data in the FIFO (CSIHnSTR0.CSIHnSRP[7:0]) equals (128-CSIHnMCTL1.CSIHnFFS[6:0])	
Dual buffer	Generated at the end of communication (specified by CSIHnMCTL2.CSIHnND[7:0]) while CSIHnCTL0.CSIHnRXE = 1.	Generated after every data transfer.
Transmit-only buffer, Direct access	Generated after every data transfer.	

14.4.4.1 INTCSIHnIR in Direct Access Mode

The example below shows the INTCSIHnIR behavior in direct access mode.

The example below assumes:

- Master mode
- Direct access mode
- No interrupt delay (CSIHnCTL1.CSIHnSIT = 0)
- Normal clock and data phase (CSIHnCFGx.CSIHnCKPx = 0, CSIHnCFGx.CSIHnDAPx = 0)
- Data length 8 bits (CSIHnCFGx.CSIHnDLSx[3:0] = 1000_B)

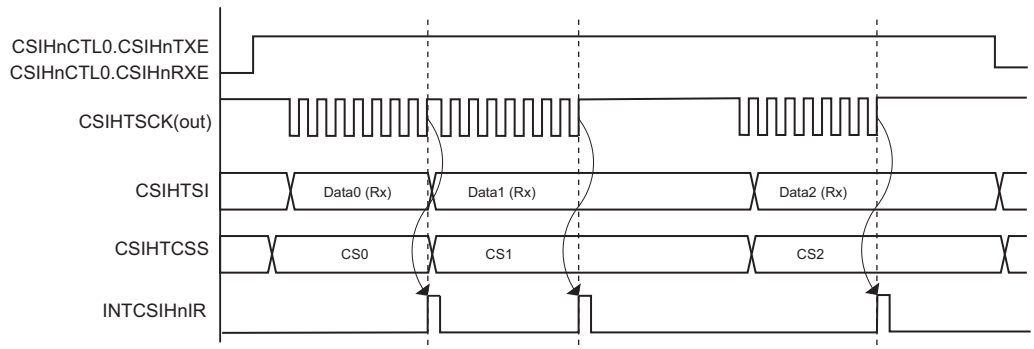

Figure 14.8 Generation of INTCSIHnIR in Direct Access Mode

14.4.4.2 INTCSIHnIR in Dual Buffer Mode

The example below shows the INTCSIHnIR behavior in dual buffer mode.

The example assumes:

- Master mode
- Dual buffer mode
- No interrupt delay (CSIHnCTL1.CSIHnSIT = 0)
- Default clock and data phase (CSIHnCFGx.CSIHnCKPx = 0, CSIHnCFGx.CSIHnDAPx = 0)
- Data length 8 bits (CSIHnCFGx.CSIHnDLSx[3:0] = 1000_B)

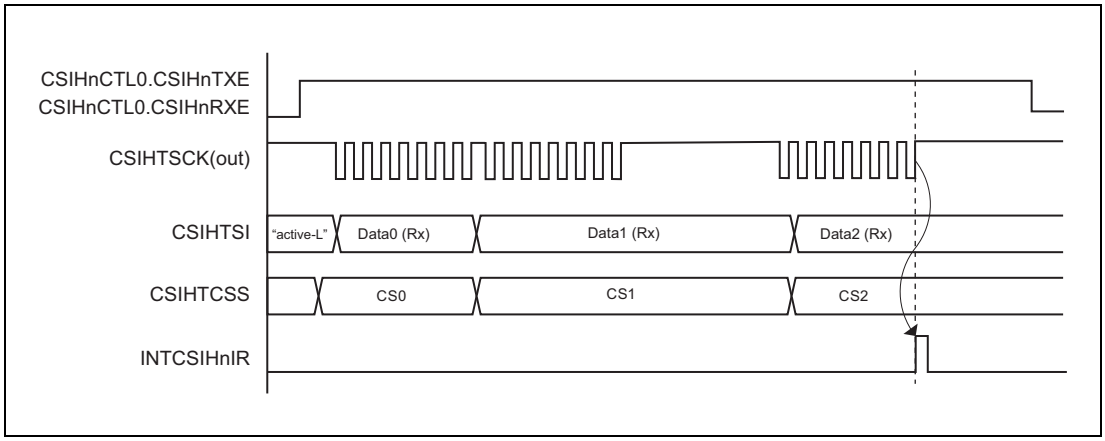

Figure 14.9 Generation of INTCSIHnIR in Dual Buffer Mode

14.4.5 INTCSIHnIRE (Reception Error Interrupt)

This interrupt is generated whenever an error is detected.

For details about generation interruption timing, see **Section 14.5.12, Error Detection**.

Table 14.40 Data Error Types

Error Type	Communication Status after Error Interrupt	Comment
FIFO overflow error	Interrupt is generated and communication continues	Data that has not been written to the FIFO buffer and the data overflowed is lost, but communication started before the error is continued.
Parity error	Interrupt is generated and communication continues	—
Data consistency check error	Interrupt is generated and communication continues	—
Time-out error	Interrupt is generated and communication continues	—
Overrun error	(Error occurrence condition 1) An interrupt is generated when the CPU reads the CSIHnRX0W/H register while no receive data is present in FIFO mode, but communication continues.	—
	(Error occurrence condition 2) When CSIHnCTL1.CSIHnHSE = 0 (handshake function disabled) in slave mode [1] An interrupt is generated when reception is completed while the previous receive data is remaining in the CSIHnRX0W/H register in direct access mode or transmit-only buffer mode, but communication continues. [2] An interrupt is generated when reception is completed while the FIFO buffer is filled with received data in FIFO mode, but communication continues.	When CSIHnCTL1.CSIHnHSE = 1 (handshake function enabled) in slave mode, communication stops due to handshake and no overrun error occurs.

The type of error that caused the generation of INTCSIHnIRE is flagged in register CSIHnSTR0.

Additionally a parity error flag and a data consistency check error flag are attached to the received data in CSIHnRX0W.

For details about the various error types, see **Section 14.5.12, Error Detection**.

14.4.6 INTCSIHnIJC (Job Completion Interrupt)

This interrupt supports the handling of jobs, see **Section 14.5.3.3, Job Concept**. This interrupt is only available in master mode.

Job mode is enabled by setting CSIHnCTL1.CSIHnJE = 1. When CSIHnCTL1.CSIHnJE = 0, CSIHTIJC is not generated.

Depending on the memory mode, this interrupt is generated according to the condition shown in the following table.

Table 14.41 INTCSIHnIJC Interrupt Generation

Memory Mode	Cause of Interrupt	
	Job Mode Disabled CSIHnCTL1.CSIHnJE = 0	**Job Mode Enabled CSIHnCTL1.CSIHnJE = 1**
FIFO	Not applicable	• Indicates that communication stopped at the end of job after job abortion*1 was triggered. • When FIFO empty is not detected, INTCSIHnIJC is generated when CSIHnCIRE = 1.
Transmit-only buffer		• Indicates that communication stopped at the end of job after job abortion*1 was triggered.
Dual buffer		
Direct access		

Note 1. Job abortion condition: CSIHnTX0W.CSIHnEOJ = 1 and CSIHnCTL0.CSIHnJOBE = 1

14.5 Operation

14.5.1 Operating Modes (Master/Slave)

For a particular CSIH module, the master or slave mode determines the source of the serial clock.

14.5.1.1 Master mode

In master mode, the serial transmission clock is generated by the internal built-in baud rate generator (BRG) and provided to the slave(s) by signal CSIHTSCK.

Master mode is enabled by setting CSIHnCTL2.CSIHnPRS[2:0] to any value but 111_B. In master mode, the BRG frequency can be set by combining the CSIHnCTL2.CSIHnPRS[2:0] bit and the CSIHnBRSy.CSIHnBRS[11:0] bit.

(1) Chip select signals

In master mode, one or several chip select signals can be used. If several slaves are connected to the master, the chip select signals can be used to address one or several of the slaves. Only a selected slave is then enabled for communication.

The communication protocol as well as additional parameters are stored separately for each chip select signal. This makes it possible to adapt the data transfer individually to the requirements of each slave. For details see **Section 14.5.3, Chip Selection (CS) Features**.

(2) Clock defaults

The default level of CSIHTSCK depends on the clock phase selection bit: It is high when CSIHnCTL1.CSIHnCKR = 0, and is low when CSIHnCTL1.CSIHnCKR = 1.

The example below shows communication in master mode for 8-bit data, with CSIHnCTL1.CSIHnCKR = 0, CSIHnCFGx.CSIHnCKPx = 0, and CSIHnCFGx.CSIHnDAPx = 0, and MSB first.

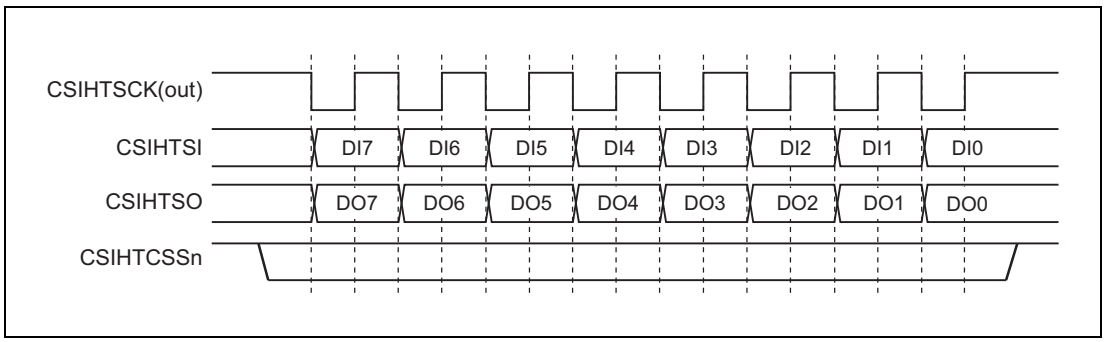

Figure 14.10 Transmit/Receive in Master Mode

14.5.1.2 Slave Mode

In slave mode, another device is the communication master and provides the transmission clock. Usual transmit operation or receive operation starts immediately after a clock signal is detected.

Slave mode is selected by setting the CSIHnCTL2.CSIHnPRS[2:0] bit to 111_B.

In slave mode, the transmission protocol setting of the CSIHnCFG0 register is enabled (setting of the CSIHnCFG1-CSIHnCFG7 register is disabled).

- CSIHnPSx[1:0]: parity usage
- CSIHnDLSx[3:0]: data length selection
- CSIHnDIRx: data direction
- CSIHnCKPx,CSIHnDAPx: clock and data phase

NOTE

When using slave mode, disable the baud rate generator (BRG) by setting bits CSIHnBRSy.CSIHnBRS[11:0] to 000_H. Set the CSIHnBRSy.CSIHnBRS[11:0] bits to a value other than 000_H to use time-out errors.

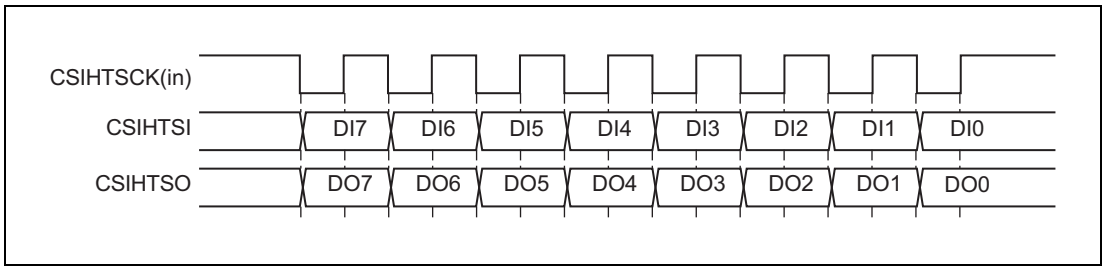

Figure 14.11 Transmit/Receive in Slave Mode

14.5.2 Master/Slave Connections

14.5.2.1 One Master and One Slave

The following figure illustrates the connections between one master and one slave.

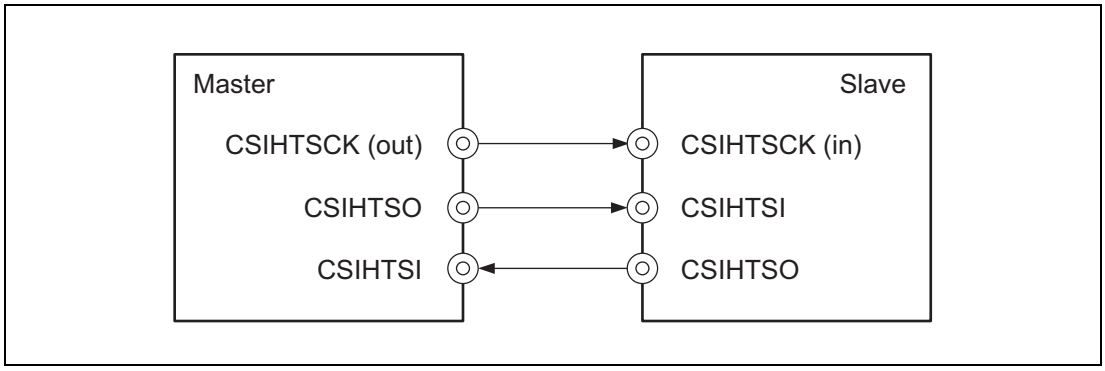

Figure 14.12 Direct Master/Slave Connection

14.5.2.2 One Master and Multiple Slaves

The following figure illustrates the connections between one master and multiple slaves. In this example, the master provides one chip select (CS) signal to each of the slaves. This signal is connected to the slave select input $\overline{\text{CSIHTSSI}}$ of the slave.

The $\overline{\text{CSIHTSSI}}$ signal can be enabled or disabled by using bit CSIHnCTL1.CSIHnSSE.

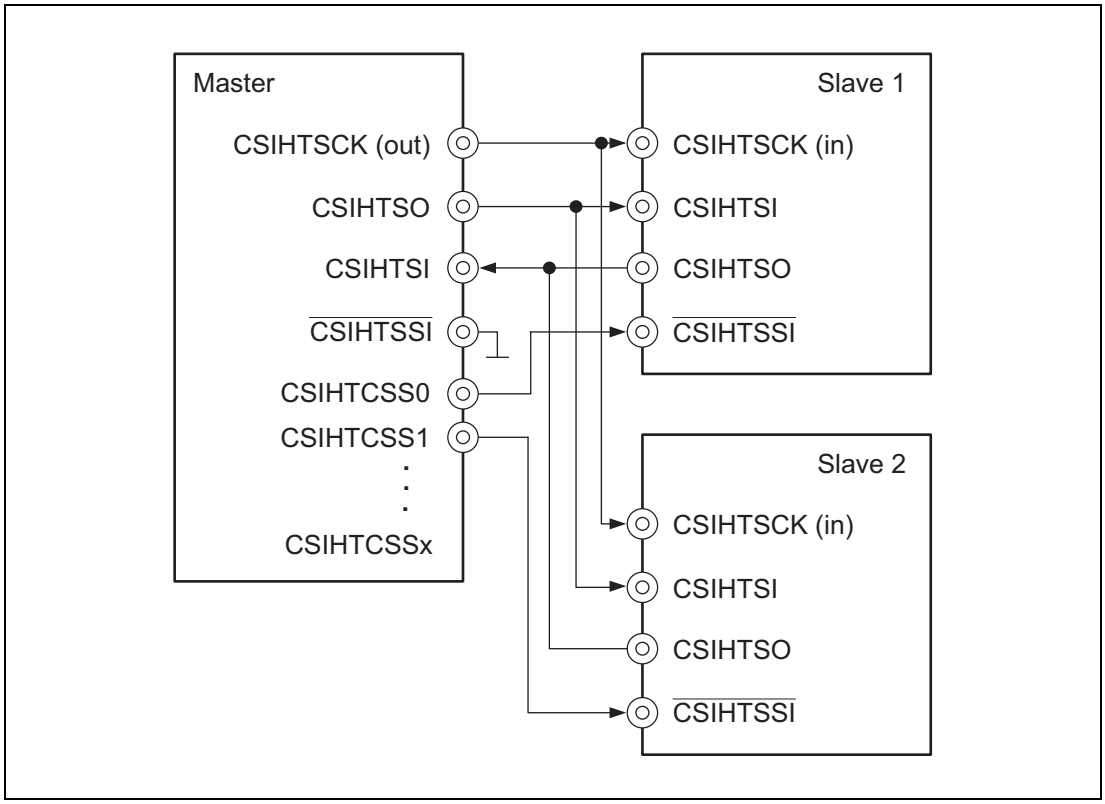

Figure 14.13 One Master to Multiple Slaves Connection

By default, the chip select level is active low. That means, a slave is selected (enabled) as a CSIH slave when its $\overline{\text{CSIHTSSI}}$ signal has low level. However, to adapt the CS to other devices, the output level of each chip select signal can also be programmed to be active high.

If a slave is not selected, it will neither receive nor transmit data. In addition, its output CSIHTSO of a slave that is not selected is set to input mode in order to avoid interference with the output of another slave that was selected.

14.5.3 Chip Selection (CS) Features

The chip select signal, CSIHTCSSx can be used by the master to select one or several slaves for communication.

14.5.3.1 Configuration Registers

The parameters for each chip select signal CSIHTCSSx are defined in the corresponding configuration register CSIHnCFGx. The parameters include the communication protocol and additional CS parameters.

The communication protocol specifies:

- Data length: The number of bits to be transmitted or received. (CSIHnCFGx.CSIHnDLSx[3:0])
- Transfer direction: MSB or LSB first. (CSIHnCFGx.CSIHnDIRx)
- Parity usage: Odd, even, 0 parity or none. (CSIHnCFGx.CSIHnPSx[1:0])
- Clock phase and data phase. (CSIHnCFGx.CSIHnCKPx, CSIHnCFGx.CSIHnDAPx)

Additional parameters for each chip select signal that is only available in master mode are:

- Selection of prescaler of baud rate generator individually for each chip select signal (CSIHnCFGx.CSIHnBRSSx[1:0])
- Chip select priority: Separates between “dominant” and “recessive” chip select signals. The priority applies if two or more chip selects signals with different configurations are simultaneously activated for message broadcasting. In this case, the configuration that is set as dominant is used. (CSIHnCFGx.CSIHnRCBx)

The principle is also called “Recessive Configuration for Broadcasting” (RCB).

CAUTION

It is forbidden to specify several chip select signals as dominant with different configurations unless all dominant chip selects have the same configuration.

- Chip select timing:
  - Setup time T_{setup}: The time from setting the CS signal active to starting data output. (CSIHnCFGx.CSIHnSPx[3:0])
  - Inter-data time T_{inter}: The time between data while the same CS signal is active. (CSIHnCFGx.CSIHnINx[3:0])
  - Hold time T_{hold}: Hold time of CS active level before changing the CS. (CSIHnCFGx.CSIHnHDx[3:0])
  - Idle time T_{idle}: Inactive time after terminating a CS signal or after every data transfer to the same CSx. (CSIHnCFGx.CSIHnIDx[2:0])

The CS timings of the setup time, the inter-data time, the hold time, and the idle time are illustrated in the figure below. When the CSIHnCFGx.CSIHnIDLx bit is set to 1, idle time is inserted into each transfer regardless of the CS signal.

Figure 14.14 provides an example when the default CSIHTCSS1 and CSIHTCSS2 signals are active low (CSIHnCTL1.CSIHnCSL1 bit = 0, CSIHnCTL1.CSIHnCSL2 bit = 0). The active level can be specified individually for each CS.

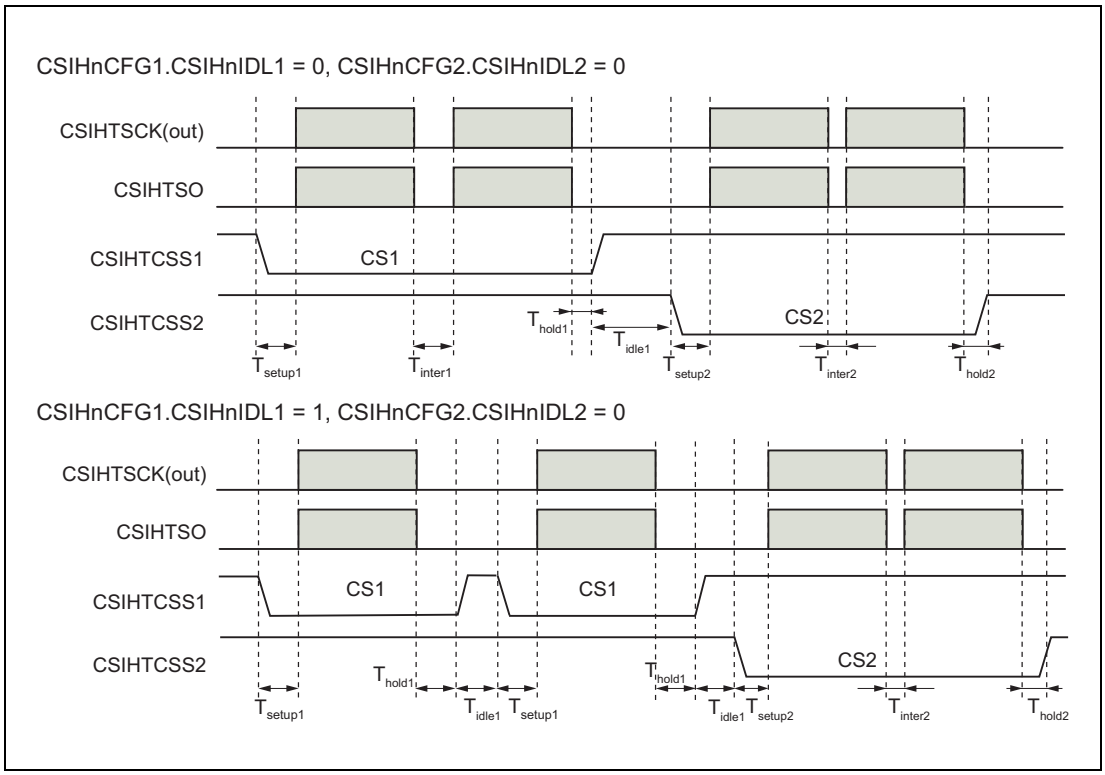

Figure 14.14 Chip Select Timings

Note that each CS signal can have a different value for setup, inter-data time, hold time, and idle time.

A particular chip select signal is activated by setting the appropriate bit in the transmission register CSIHnTX0W.CSIHnCSx.

CSIHnRX0W.CSIHnCSx in the reception register indicates the chip select signal associated with the received data.

CAUTION

When high-priority communication function using CPU control is enabled (CSIHnCTL1.CSIHnPHE = 1), idle state is inserted when low-priority communication mode changes to high-priority communication mode and when high-priority communication mode changes to low-priority communication mode regardless of the IDLn bit setting.

14.5.3.2 CS Example

The following figure shows an example of two consecutive data transmissions.

The first communication uses CS0 to communicate with one single slave. The second enables CS0 and CS1 to broadcast a message to two slaves. The priority of CS0 is set to “recessive: low priority”, the priority of CS1 to “dominant: high priority”.

Therefore, the second communication is performed by using the dominant CS1 setting.

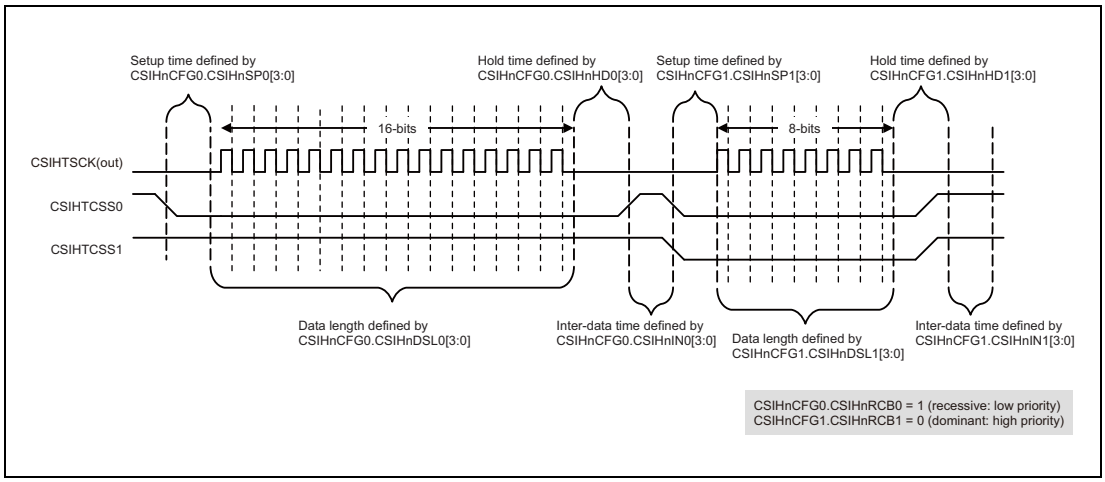

Figure 14.15 Chip Select and RCB Example

14.5.3.3 Job Concept

In terms of CSIH, a job consists of a number of data that are transferred.

Job mode enable

The job mode can only be enabled in master mode. The job mode is enabled and disabled by CSIHnCTL1.CSIHnJE, while the CSIH is disabled by CSIHnCTL0.CSIHnPWR = 0.

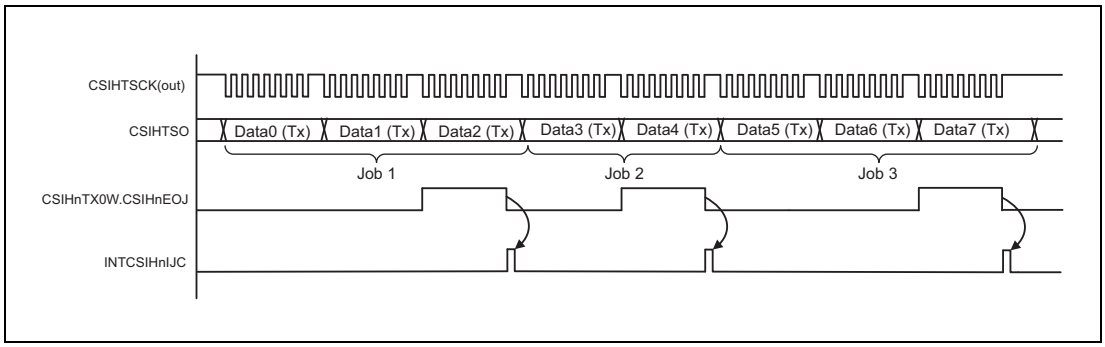

Figure 14.16 Job Examples

A job ends by transmitting data with CSIHnTX0W.CSIHnEOJ = 1.

A communication stop can be specified to occur after a job has finished. This is done by setting CSIHnCTL0.CSIHnJOBE. When CSIHnJOBE is set, the communication continues until data is transmitted, for which the CSIHnEOJ bit was set. After this data is transmitted, the communication is stopped and the job completion interrupt INTCSIHnIJC is generated.

14.5.4 Chip Select Timing Details

14.5.4.1 Changing the Clock Phase

The serial clock level specified by CSIHnCFGx.CSIHnCKPx may be changed when communication is disabled. The minimum value of an idle time is one period of transmission clock (CSIHTSCK(out)).

If the idle time is set to 0.5 transmission clock periods (in CSIHnCFGx.CSIHnIDx[2:0]) and two consecutive data are transmitted with different CSIHnCFGx.CSIHnCKPx configuration, the idle time is automatically extended to one period of CSIHTSCK(out).

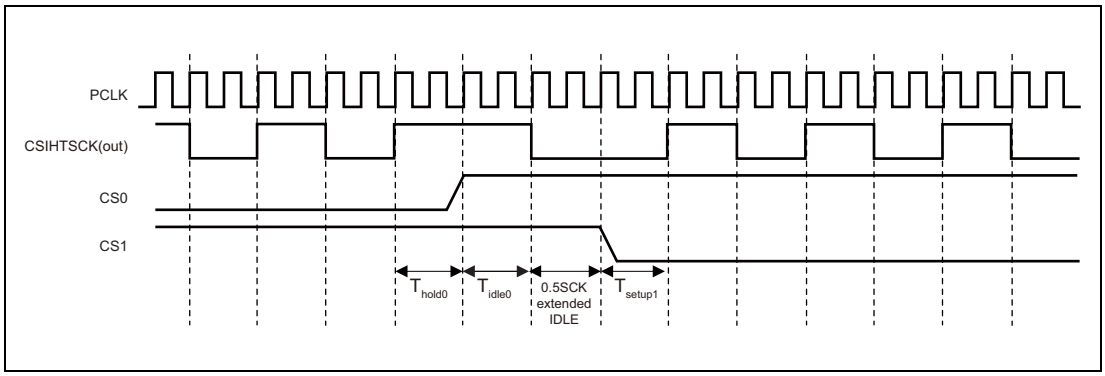

Figure 14.17 Clock Phase Timing with PCLK/4, T_{hold0} = T_{setup1} = 0.5CSIHTSCK, T_{idle0} = 0.5CSIHTSCK, CSIHnCFG0.CSIHnCKP0 = 0 (CSIHTCSS0) → CSIHnCFG1.CSIHnCKP1 = 1 (CSIHTCSS1)

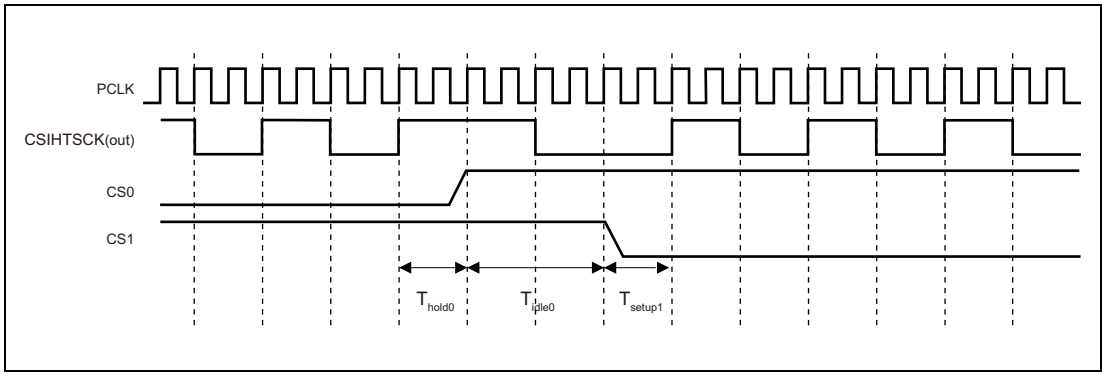

Figure 14.18 Clock Phase Timing with PCLK/4, T_{hold0} = T_{setup1} = 0.5CSIHTSCK, T_{idle0} = 1CSIHTSCK, CSIHnCFG0.CSIHnCKP0 = 0 (CSIHTCSS0) → CSIHnCFG1.CSIHnCKP1 = 1 (CSIHTCSS1)

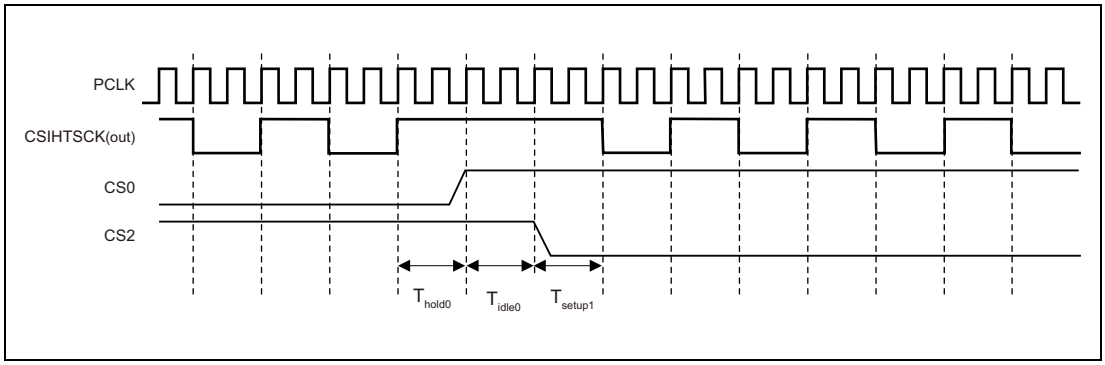

Figure 14.19 Clock Phase Timing with PCLK/4, T_{hold0} = T_{setup1} = 0.5CSIHTSCK, T_{idle0} = 0.5CSIHTSCK, CSIHnCFG0.CSIHnCKP0 = 0 (CSIHTCSS0) → CSIHnCFG2.CSIHnCKP2 = 0 (CSIHTCSS2)

14.5.4.2 Changing the Data Phase

The CSIHnCFGx.CSIHnDAPx bit defines the phase of the data bits relative to the clock.

The following shows the relationship between bit CSIHnCFGx.CSIHnDAPx and hold/setup time period.

The hold time period is a period from the last edge of the serial clock (CSIHTSCK) until CSIHTCSS[7:0] becomes inactive level regardless of the CSIHnCFGx.CSIHnDAPx setting.

The setup time period is a period from the time when CSIHTCSS[7:0] becomes active level until transmission data (CSIHTSO) is output.

For this reason, there is a time difference of 0.5 CSIHTSCK cycles until the serial clock (CSIHTSCK) edge is output depending on the CSIHnCFGx.CSIHnDAPx setting.

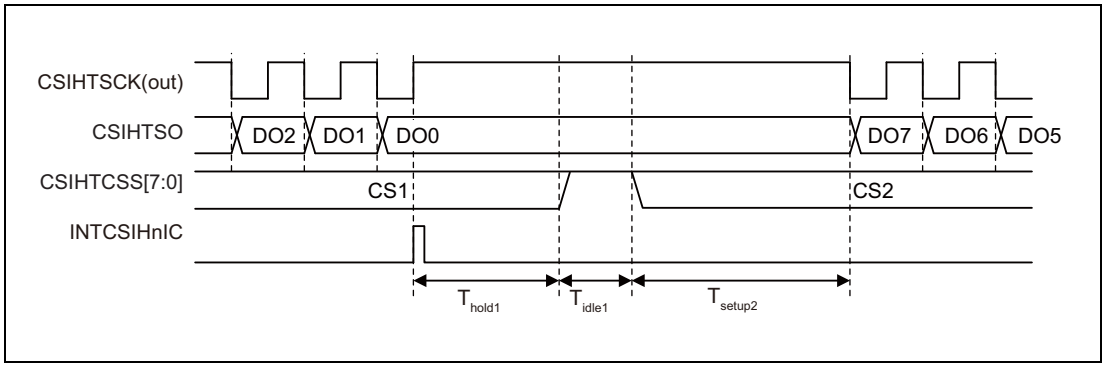

Figure 14.20 Data Phase Timing with CSIHnCFG1.CSIHnCKP1 = 0, CSIHnCFG1.CSIHnDAP1 = 0 and CSIHnCFG2.CSIHnCKP2 = 0, CSIHnCFG2.CSIHnDAP2 = 0

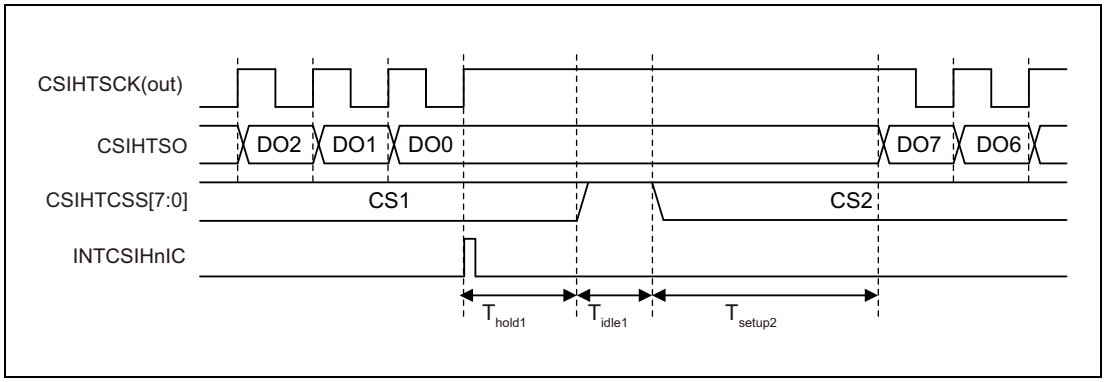

Figure 14.21 Data Phase Timing with CSIHnCFG1.CSIHnCKP1 = 1, CSIHnCFG1.CSIHnDAP1 = 0 and CSIHnCFG2.CSIHnCKP2 = 0, CSIHnCFG2.CSIHnDAP2 = 1

14.5.5 Transmission Clock Selection

In master mode, the transfer clock frequency is selectable using the following bits:

- CSIHnCTL2.CSIHnPRS[2:0]
- CSIHnBRSy.CSIHnBRS[11:0](y = 0-3)
- CSIHnCFGx.CSIHnBRSSx[1:0] (x = 0 to 7)

The transfer clock frequency of the transmit clock CSIHTSCK is determined by the CSIHnCTL2.CSIHnPRS[2:0] and CSIHnBRSy.CSIHnBRS [11:0] settings. One among four baud rates, CSIHnBRS3 to CSIHnBRS0, is selected for each chip select signal by the CSIHnCFGx.CSIHnBRSSx[1:0] setting.

The following figure shows a block diagram of the baudrate generator.

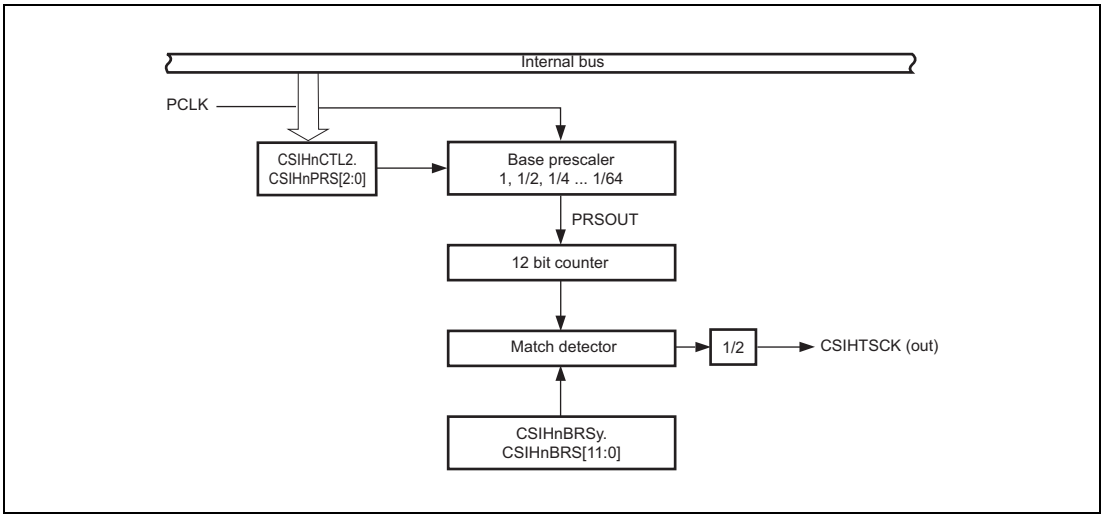

Figure 14.22 Baud Rate Generator Block Diagram

Setting CSIHnBRSy.CSIHnBRS[11:0] to 000_H disables the baud rate generator, and thus all CSIHTSCK are stopped.

Transfer clock frequency calculation

The transfer clock frequency in master mode is calculated by the following formula.

Transfer clock frequency (CSIHTSCK) = PCLK / (PCLK's division ratio) = PCLK / ($2^{\alpha} \times k \times 2$)

where

α = CSIHnCTL2.CSIHnPRS[2:0] = 0 to 6

k = CSIHnBRS0.CSIHnBRS0[11:0] = 1 to 4095
(when CSIHnCFGx.CSIHnBRSSx[1:0] = 0)

CSIHnBRS1.CSIHnBRS1[11:0] = 1 to 4095
(when CSIHnCFGx.CSIHnBRSSx[1:0] = 1)

CSIHnBRS2.CSIHnBRS2[11:0] = 1 to 4095
(when CSIHnCFGx.CSIHnBRSSx[1:0] = 2)

CSIHnBRS3.CSIHnBRS3[11:0] = 1 to 4095
(when CSIHnCFGx.CSIHnBRSSx[1:0] = 3)

Transfer clock frequency limits

When setting the transfer clock frequency, please note:

- Minimum transfer clock frequency = PCLK / 524160 (both master mode and slave mode)
- Maximum transfer clock frequency is as follows:
  - Master mode: 10.0 MHz
  - Slave mode: 6.66 MHz

14.5.6 CSIH Buffer Memory

The CSIH has a configurable RAM that can be used for buffered I/O. The size is 128 words. One word is comprised of 32 bits data plus 7 bits ECC.

The following configurations are available:

Mode	CSIHnCTL0. CSIHnMBS	CSIHnMCTL0. CSIHnMMS[1:0]
FIFO mode	0	00_B
Dual buffer mode		01_B
Transmit-only buffer mode		10_B
Direct access mode	1	X

14.5.6.1 FIFO Mode

In FIFO mode, data can be written to the CSIHnTX0W register without waiting for completion of the transmission, and data can be received without reading the CSIHnRX0W register immediately, provided that the FIFO is not full.

Transmission and reception occur simultaneously - one data is transmitted, one data is received. That means, received data overwrites the transmitted data in the FIFO.

The CSIH automatically updates the respective FIFO memory pointers when data is written to or read from the FIFO memory or transmitted from or received to the FIFO memory.

Table 14.42 FIFO Mode

Pointer Description	Control Bit*[1]	Range
Number of untransmitted words	CCSIHnSTR0.CSIHnSPF[7:0]	0 to 128
Number of words received and stored in the FIFO	CSIHnSTR0.CSIHnSRP[7:0]	0 to 128
Address of transmission data to be written or read	CSIHnMRWP0.CSIHnTRWA[6:0]	0000_H to $01FC_H$
Address of receive data to be read	CSIHnMRWP0.CSIHnRRA[6:0]	0000_H to $01FC_H$
Transmission address	CSIHnMCTL2.CSIHnSOP[6:0]	0000_H to $01FC_H$

Note 1. The value is automatically updated each time data is written, read, transmitted, or received.

The CSIH status register contains also two FIFO status flags:

- CSIHnSTR0.CSIHnFLF: FIFO full
- CSIHnSTR0.CSIHnEMF: FIFO empty

When this mode is started, bit CSIHnSTCR0.CSIHnPCT must be set. This sets only CSIHnSTR0.CSIHnEMF, but not reset).

All FIFO pointers and FIFO flags except CSIHnSTR0.CSIHnEMFare reset and CSIHnSTR0.CSIHnEMF is set.

14.5.6.2 Dual Buffer Mode

In this mode, the memory is divided into two parts of equal size – this means the lower-order 64 words for transmit data and the higher-order 64 words for received data. In dual buffer mode, the respective buffer pointers indicate the values shown in the following table.

Table 14.43 Dual Buffer Mode

Pointer Description	Pointer*1	Range
Address of data to be written to or read from transmit buffer	CSIHnMRWP0.CSIHnTRWA[6:0]	0000_H to $00FC_H$
Address of data to be read from receive buffer	CSIHnMRWP0.CSIHnRRA[6:0]	0000_H to $00FC_H$
Number of transmission data remaining in transmit buffer	CSIHnMCTL2.CSIHnND[6:0]	0 to 64
Transmission address	CSIHnMCTL2.CSIHnSOP[6:0]	0000_H to $00FC_H$

Note 1. Both pointers are automatically incremented each time data is written or read.

14.5.6.3 Transmit-Only Buffer Mode

In this mode, the entire memory is used to save transmission data.

Received data must be read directly from CSIHnRX0W/H.

In transmit-only buffer mode, the respective buffer pointer indicates the values shown in the following table.

Table 14.44 Transmit-Only Buffer Mode

Pointer Description	Pointer*1	Range
Address of data to be written to or read from transmit buffer	CSIHnMRWP0.CSIHnTRWA[6:0]	0000_H to $01FC_H$
Number of transmission data remaining in transmit buffer	CSIHnMCTL2.CSIHnND[6:0]	0 to 128
Transmission address	CSIHnMCTL2.CSIHnSOP[6:0]	0000_H to $01FC_H$

Note 1. Pointers are automatically incremented each time data is written or read.

14.5.6.4 Direct Access Mode

In direct access mode, the CSIH memory is completely bypassed:

- Transmission data provided by the CPU to the transmission register CSIHnTX0W or CSIHnTX0H is directly copied to the shift register.
- Reception data is directly copied from the shift register to the reception register CSIHnRX0W or CSIHnRX0H.

14.5.7 Data Transfer Modes

14.5.7.1 Transmit-Only Mode

Setting CSIHnCTL0.CSIHnTXE = 1 and CSIHnCTL0.CSIHnRXE = 0 puts the CSIH in transmit-only mode. Start of transmission depends on the memory mode:

- In case of FIFO or direct access mode, transmission starts when transmit data is written to the CSIHnTX0W or CSIHnTX0H register.
- In case of dual buffer or transmit-only buffer mode, transmission starts when bit CSIHnMCTL2.CSIHnBTST is set.

14.5.7.2 Receive-Only Mode

Setting CSIHnCTL0.CSIHnTXE = 0 and CSIHnCTL0.CSIHnRXE = 1 puts the CSIH in receive-only mode.

In master mode, start of reception depends on the memory mode:

- In case of FIFO or direct access mode, reception starts when dummy data is written in the CSIHnTX0W or CSIHnTX0H register.

In slave mode, reception starts as soon as the CSIHTSCK transmission clock from the master is received. It is not necessary to write data to the CSIHnTX0W or CSIHnTX0H register of the slave.

- In dual-buffer mode or transmit-only buffer mode, reception starts when bit CSIHnMCTL2.CSIHnBTST is set.

14.5.7.3 Transmit/Receive Mode

Setting CSIHnCTL0.CSIHnTXE = 1 and CSIHnCTL0.CSIHnRXE = 1 puts the CSIH in transmit/receive mode.

Start of communication (transmission and reception) depends on the memory mode:

- In case of FIFO or direct access mode, communication starts when transmit data is written to the CSIHnTX0W or CSIHnTX0H register.
- In case of dual buffer or transmit-only buffer mode, communication starts when bit CSIHnMCTL2.CSIHnBTST is set.

14.5.7.4 Summary

The following table summarizes this section. It shows how data transfer is started in the various memory, operating, and transfer modes.

Table 14.45 Start of Data Transfer

Memory and Operating Mode		Transfer Mode	
		Transmit-only Transmit/Receive	Receive-only
FIFO, direct access	Master	Writing to the CSIHnTX0W register or the CSIHnTX0H register	Writing to the CSIHnTX0W register on the CSIHnTX0H register
	Slave	Incoming clock from the master	Incoming clock from the master
Transmit-only buffer, dual buffer	Master	CSIHnMCTL2.CSIHnBTST = 1	CSIHnMCTL2.CSIHnBTST = 1
	Slave	Incoming clock from the master	Incoming clock from the master

14.5.8 Data Length Selection

14.5.8.1 Data Length Between 2 and 16 bits

The length of a data packet is selectable for each chip select signal from 2 to 16 bits using CSIHnCFGx.CSIHnDLSx[3:0]. The examples below show the communication with MSB first (CSIHnCFGx.CSIHnDIRx = 0).

Data length = 16 bits (CSIHnCFGx.CSIHnDLSx[3:0] = 0000_B)

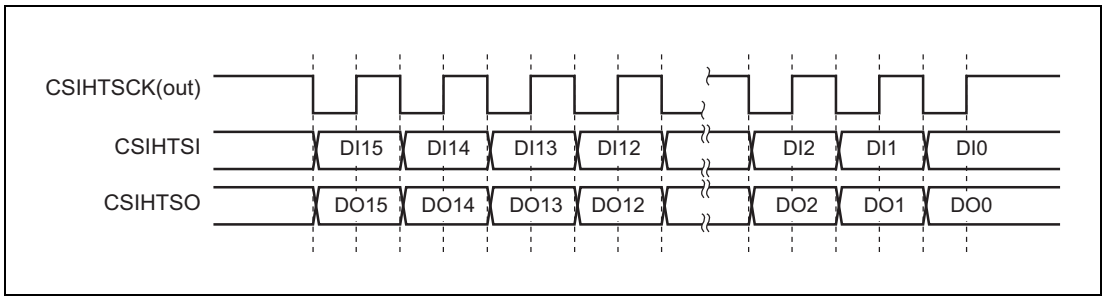

Figure 14.23 16-Bit Data Length, MSB First

Data length = 14 bits (CSIHnCFGx.CSIHnDLSx[3:0] = 1110_B):

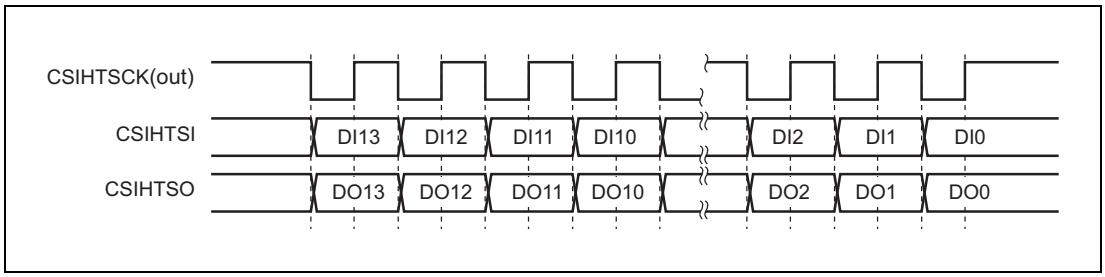

Figure 14.24 14-Bit Data Length, MSB First

14.5.8.2 Data Length Greater than 16 Bits

To transmit/receive data exceeding 16 bits, the extended data length (EDL) feature can be used.

The EDL feature is enabled by setting bit CSIHnCTL1.CSIHnEDLE to 1.

The EDL feature works as follows:

- The data must be broken into 16-bit blocks plus remainder. For example, 42-bit data would be broken into two 16-bit blocks plus 10 bits.
- The remainder bit length is set in CSIHnCFGx.CSIHnDLSx[3:0] as “data length.”
- For transmitting the 16-bit blocks, CSIHnTX0W.CSIHnEDL must be set to 1. In this case, the data written to CSIHnTX0W is transmitted as a 16-bit data length regardless of the CSIHnCFGx.CSIHnDLSx[3:0] bit setting.
- The transfer is complete after a block with the specified data length (the remainder of data specified with CSIHnTX0W.CSIHnEDL = 0) has been transmitted.

Example

Example for transmitting 40-bit data ($123456789A_H$) to CS0:

40 bits are split into two 16-bit blocks plus 8 bits.

- Initialize CSIHnCFG0.CSIHnDLS0[3:0] = 8_D.
- To transmit $123456789A_H$ with MSB first, write the following sequence to CSIHnTX0W:
  - 20FE 1234_H (CSIHnTX0W.CSIHnEDL = 1)
  - 20FE 5678_H (CSIHnTX0W.CSIHnEDL = 1)
  - 00FE $009A_H$ (CSIHnTX0W.CSIHnEDL = 0)

The following figure illustrates the timing.

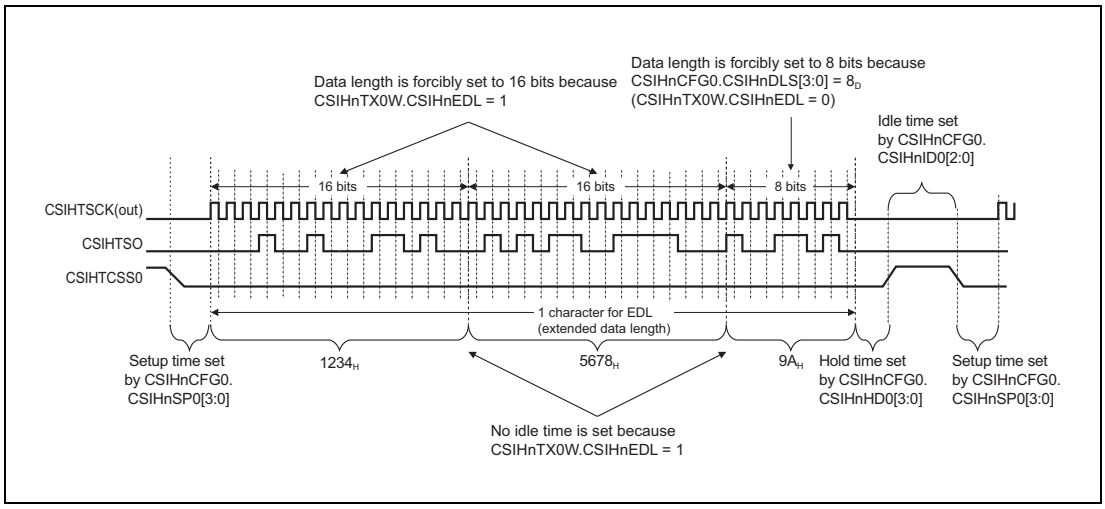

Figure 14.25 EDL Timing Diagram

NOTES

1. Data lengths settings lower than 7 bits are only permitted in combination with EDL mode.
2. It is not possible to transmit two consecutive data with a data length of less than 7 bits.
3. If parity is enabled, the parity bit is added after the last bit.
4. When the extended data length (EDL) feature is used, use the same chip select signal.
5. If CSIHnTX0W.CSIHnEOJ and CSIHnTX0W.CSIHnEDL are set to 1 at the same time while CSIHnCTL1.CSIHnJE = 1 and CSIHnCTL1.CSIHnEDLE = 1, correct operation is not guaranteed.
6. To consider the data direction, pay attention to the following example:
   - Data to be transmitted: 123456_H
   - MSB first:
     Set CSIHnCFGx.CSIHnDIRx = 0
     Write CSIHnTX0W = 20FE 1234_H (EDL bit = 1)
     Write CSIHnTX0W = 00FE 0056_H (EDL bit = 0)
   - LSB first:
     Set CSIHnCFGx.CSIHnDIRx = 1
     Write CSIHnTX0W = 20FE 3456_H (EDL bit = 1)
     Write CSIHnTX0W = 00FE 0012_H (EDL bit = 0)
7. EDL mode cannot be used in receive-only mode of slave mode.
   (CSIHnCTL2.CSIHnPRS[2:0] = 111_B, CSIHnCTL0.CSIHnTXE = 0, CSIHnCTL0.CSIHnRXE = 1)

14.5.9 Serial Data Direction Selection

The serial data direction is selectable for each chip select signal by using the CSIHnDIRx bit in the CSIHnCFGx register.

The examples below show communication for a data length of 8 bit (CSIHnCFGx.CSIHnDLSx[3:0] = 1000_B).

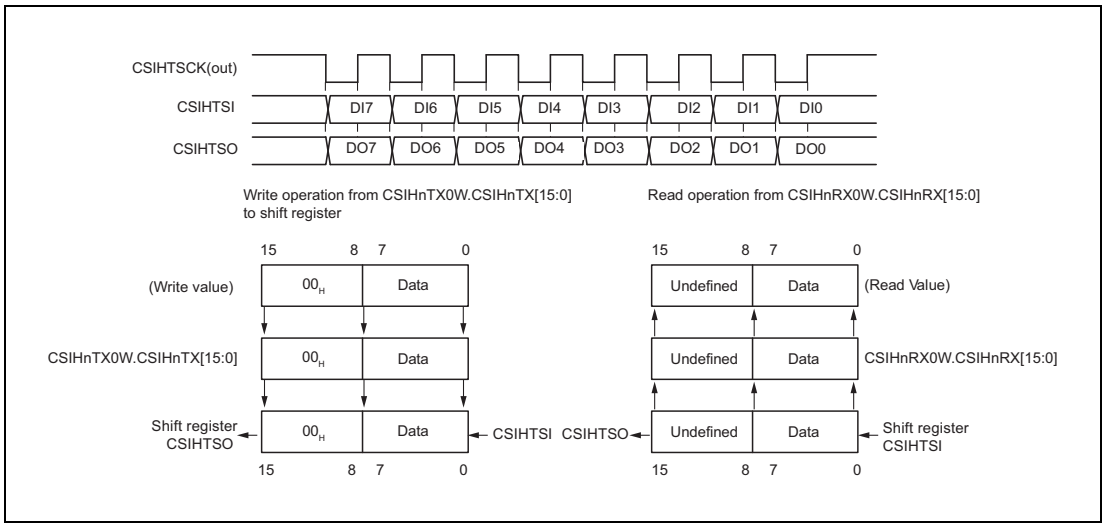

Figure 14.26 Serial Data Direction Select Function - MSB First (CSIHnDIRx = 0)

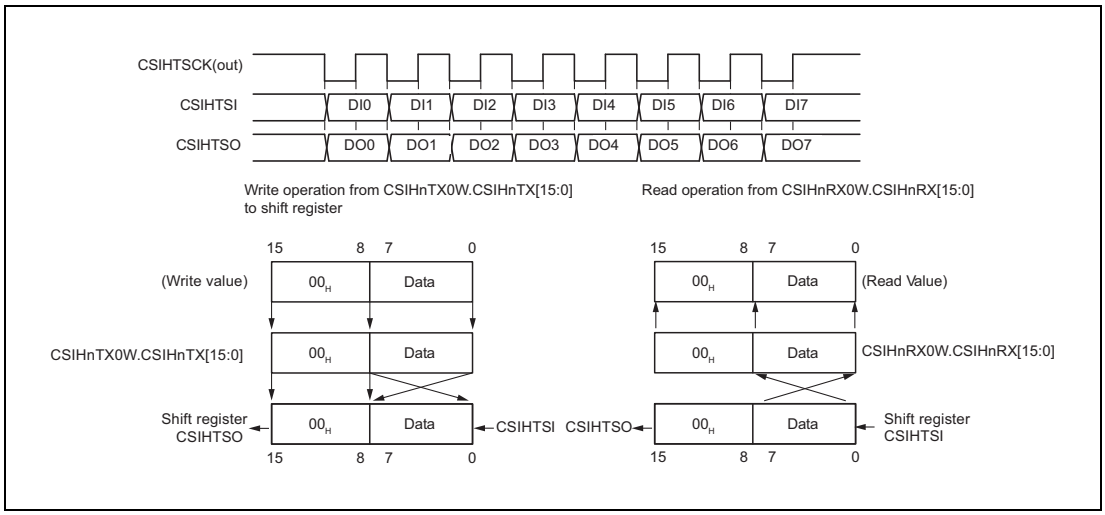

Figure 14.27 Serial Data Direction Select Function - LSB First (CSIHnDIRx = 1)

14.5.10 Slave Select (SS) Function

The SS (slave select) function enables communication between one master and multiple slaves.

In master mode, the master device outputs the salve select signal (CSIHTCSSx) to select a single slave. Communication by a device in slave mode is enabled when the slave input select signal ($\overline{\text{CSIHTSSI}}$) is at the low level.

Refer to the **Section 14.5.2, Master/Slave Connections**, for an example of a connection using the SS function.

14.5.10.1 Communication Timing Using SS Function

The following figure illustrates the communication signal using the SS function and timings.

In slave mode, the data transfer configuration is determined by the CSIHnCFG0 register.

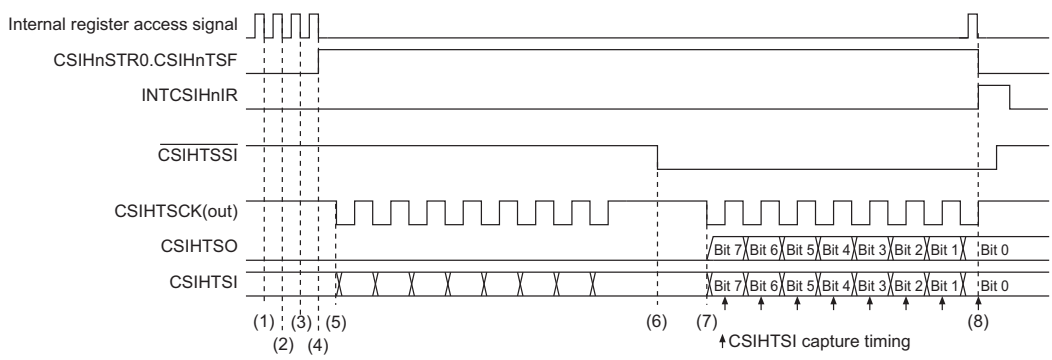

Figure 14.28 Transmission/Reception Timing of Communication Using SS Function

(1) CSIH is put into slave mode by setting CSIHnCTL2.CSIHnPRS[2:0] = 111_B. CSIHnCFG0.CSIHnCKP0 and CSIHnCFG0.CSIHnDAP0 are 0.

(2) The data length is 8 bits (CSIHnCFG0.CSIHnDLS0[3:0] = 1000_B). The data direction is MSB first (CSIHnCFG0.CSIHnDIR0 = 0).

(3) Transmit/receive mode is set. (CSIHnCTL0.CSIHnTXE = 1, CSIHnCTL0.CSIHnPWR = 1). Communication start is permitted.

(4) The transfer status flag CSIHnSTR0.CSIHnTSF is automatically set in direct access mode or FIFO mode when transfer data is written to the CSIHnTX0W or CSIHnTX0H transmission register.

(5) As long as signal $\overline{\text{CSIHTSSI}}$ is high, transmission/reception is not started, even if an external transmission clock CSIHTSCK is applied. Input at CSIHTSI is ignored.

(6) Changing $\overline{\text{CSIHTSSI}}$ to low level indicates that CSIHTSO is enabled and ready for transmission.

(7) Now, as soon as the external clock signal CSIHTSCK appears, the slave transmits data to CSIHTSO and simultaneously captures data from CSIHTSI.

(8) Interrupt INTCSIHnIR indicates when the reception is complete. The CSIHnRX0W/H register can be read.

14.5.10.2 CSIHTSSO Operation

CSIHnPWR	CSIHnTXE	CSIHnRXE	CSIHnSSE	CHISTSSO
0	—	—	—	H
1	—	—	0	H
	0		1	H
	1		1	Reversed value of $\overline{\text{CSIHTSSI}}$ level

The CSIHTSSO pin is a signal to control the I/O function of the chip's SO pin in case of using the SS function.

The CSIHTSO pin is enabled when the CSIHTSSO pin is "High" (the chip's SO pin is being driven).

The CSIHTSO pin is disabled when the CSIHTSSO pin is "Low" (the chip's SO pin is not being driven).

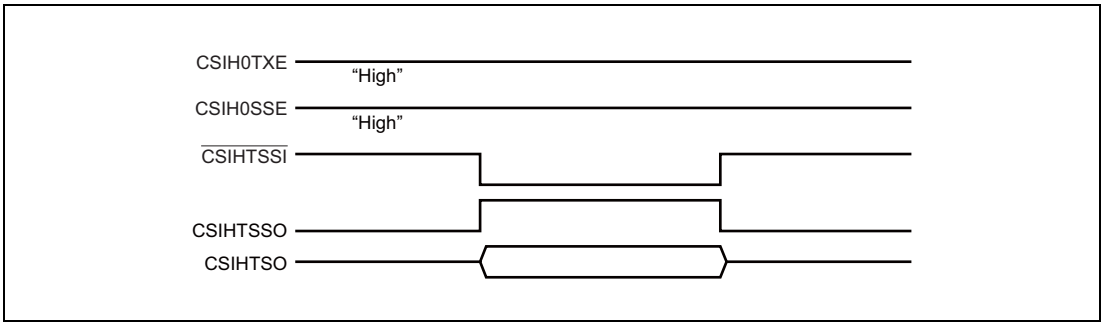

Figure 14.29 Operation of CSIHTSSO

CAUTION

If $\overline{\text{CSIHTSSI}}$ pin is changed during communication (CSIHnSTR0.CSIHnTSF = 1), current communication is not assured.

14.5.11 Handshake Function

CSIH features a handshake function to synchronize the master and the slave devices. This function can be enabled/disabled by bit CSIHnCTL1.CSIHnHSE. For handshake, the signals CSIHTRYI and CSIHTRYO are used.

The timing of transitions to the busy state depends on the setting of the data phase selection bit, CSIHnCFGx.CSIHnDAPx.

14.5.11.1 Slave Mode

When the slave becomes busy while CSIHnCTL1.CSIHnHSE = 1, the CSIHTRYO signal outputs low level 0. This state is produced in the following two cases:

1. When the next transmission data is not ready:
   When the slave is set to transmit-only mode or transmit/receive mode (CSIHnCTL0.CSIHnTXE = 1), CSIHTRYO outputs low level (busy state) in the following state.

Table 14.46 Memory Mode and Transmission State of Slave

Memory Mode	Transmission State of Slave
Direct access mode	No next transfer data
FIFO mode	No next transfer data (CSIHnSTR0.CSIHnEMF = 1)
Dual buffer mode	CSIHnMCTL2.CSIHnBTST is not set to 1
Transmit-only buffer mode	

The example below is on the assumption of an eight-bit data length.

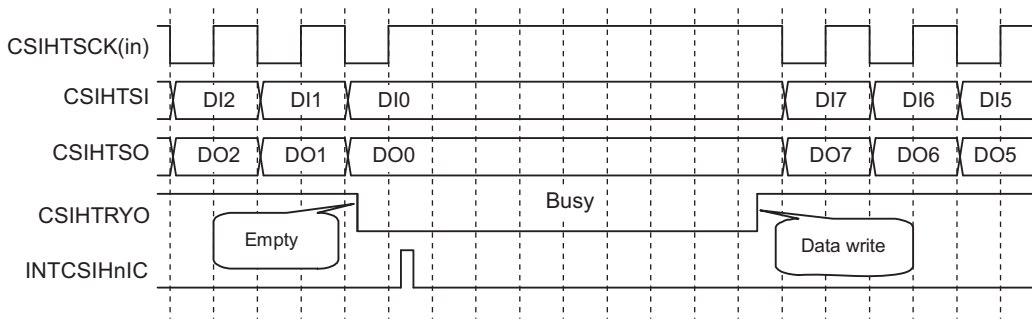

Figure 14.30 Busy Signal from the Slave (FIFO Mode; CSIHnCFGx.CSIHnDAPx = 0)

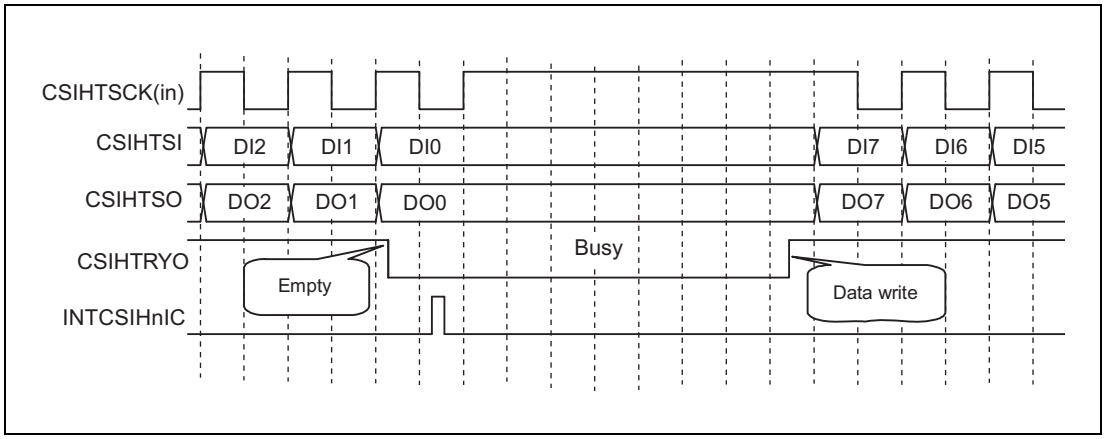

Figure 14.31 Busy Signal from the Slave (FIFO Mode; CSIHnCFGx.CSIHnDAPx = 1)

2. When the receive register is full:
   Because the previously received data is still in the CSIHnRX0 register while the slave is in receive-only or transmit/receive mode (CSIHnCTL0.CSIHnRXE = 1), new data cannot be copied from the shift register to CSIHnRX0 (CSIHnRX0 full condition).
   When CSIHnCTL0.CSIHnRXE = 1, CSIHTRYO outputs low level (busy state) in the following state.

Table 14.47 Memory Mode and Reception State of Slave

Memory Mode	Reception State of Slave
Direct access mode	CSIHnRX0W or CSIHnRX0H is full
FIFO mode	Receive data remaining in the buffer (CSIHnSTR0.CSIHnFLF = 1)
Dual buffer mode	No applicable state
Transmit-only buffer mode	CSIHnRX0W or CSIHnRX0H is full

The example below is on the assumption of an eight-bit data length.

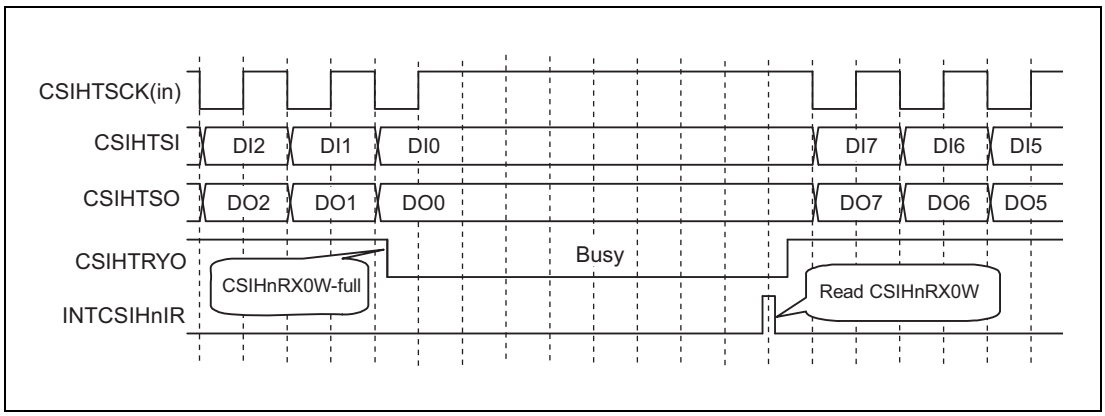

Figure 14.32 Busy Signal from the Slave (Direct Access Mode; CSIHnCFGx.CSIHnDAPx = 0)

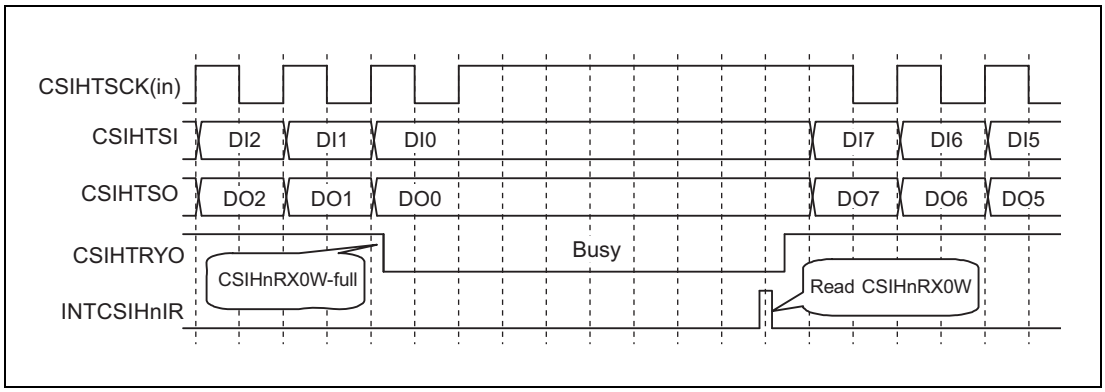

Figure 14.33 Busy Signal from the Slave (CSIHnCFGx.CSIHnDAPx = 1)

14.5.11.2 Master Mode

When the master detects CSIHTRYI = 0 while CSIHnCTL1.CSIHnHSE = 1, the following transfer is put on hold, and the master goes into wait status. It suspends the CSIHTSCK clock.

The CSIHTRYI level is checked at each half clock cycle of CSIHTSCK.

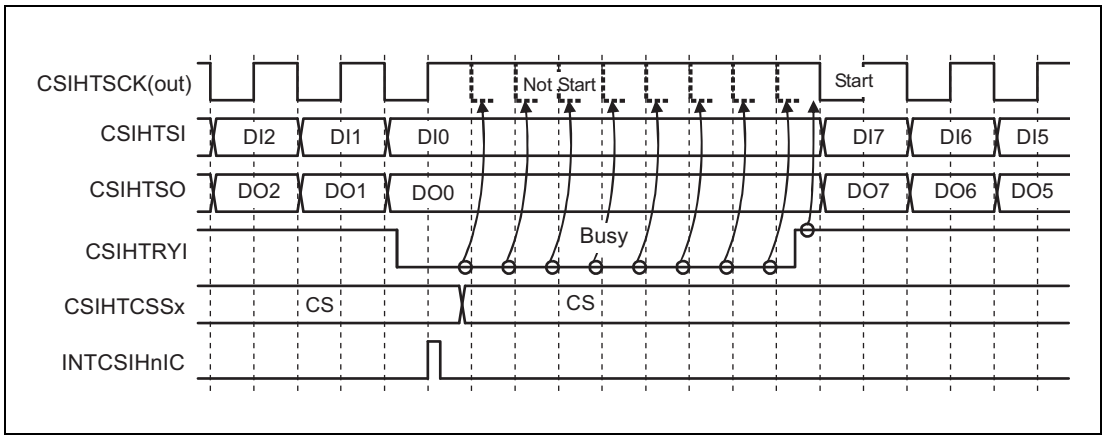

Figure 14.34 Master's Reaction on CSIHTRYI (CSIHnCFGx.CSIHnDAPx = 0)

CSIHTRYI must be pulled down by the slave before the next transfer starts. When the slave changes the CSIHTRYI signal to low level during data transfer, the serial clock from the master stops at the completion of data transfer.

The master resumes the communication as soon as CSIHTRYI becomes high level (the slave is "ready").

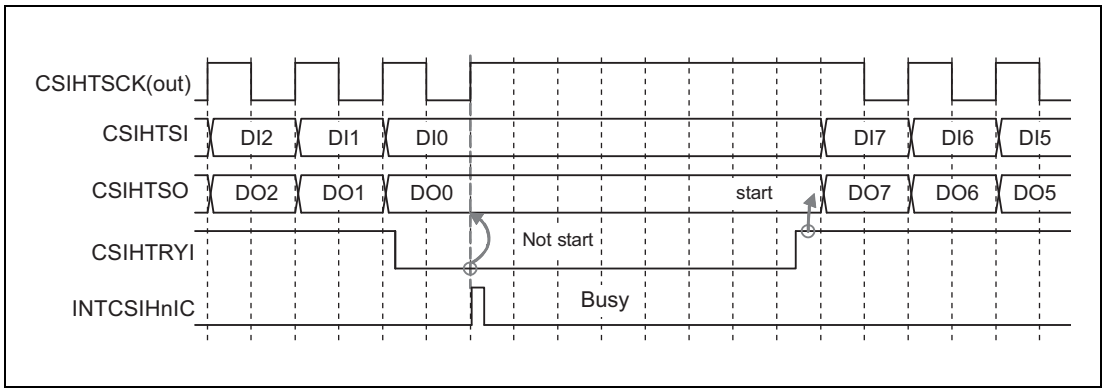

Figure 14.35 Master's Reaction on CSIHTRYI (CSIHnCFGx.CSIHnDAPx = 1)

CAUTIONS

1. **If multiple slaves are connected, the master must detect only the CSIHTRYI signal from the slave it has selected for communication.**
2. **Even when the CSIHTRYI pin of the master detects the CSIHTRYO signal of the slave during data transfer, communication is not in wait status until data transfer finishes.**

14.5.12 Error Detection

CSIH can detect five error types:

- Data consistency check error (transmission data)
- Parity error (received data)
- Overrun error (received data)
- Time-out error (in FIFO mode)
- Overflow error (in FIFO mode)

Check for parity, data consistency check and time-out errors can be enabled or disabled individually.

If one of these errors is detected, the interrupt request, INTCSIHnIRE is generated and the corresponding flags are set.

14.5.12.1 Data Consistency Check

The purpose of the data consistency check is to ensure that the data physically transmitted as output signal is identical to the original data that was copied to the shift register.

The data consistency check can be enabled/disabled by bit CSIHnCTL1.CSIHnDCS. When executing a data consistency check, always set CSIHTSO to PIPCn.PIPCn_m = 1. It is not active if data transmission is disabled (CSIHnCTL0.CSIHnTXE = 0).

When the data consistency check is active, the data transferred from CSIHnTX0W or CSIHnTX0H to the shift register is copied to a separate register. In addition, the physical levels at CSIHTSO are read back into an own shift register.

After completion of the transmission, the transmitted data is compared with the original transmission data.

Mismatch is considered as a data consistency check error:

- Interrupt INTCSIHnIRE is generated.
- Bit CSIHnSTR0.CSIHnDCE is set.

Additionally, CSIHnRX0W.CSIHnTDCE of data that contains the error is set.

The data consistency check function is illustrated in the following block diagram.

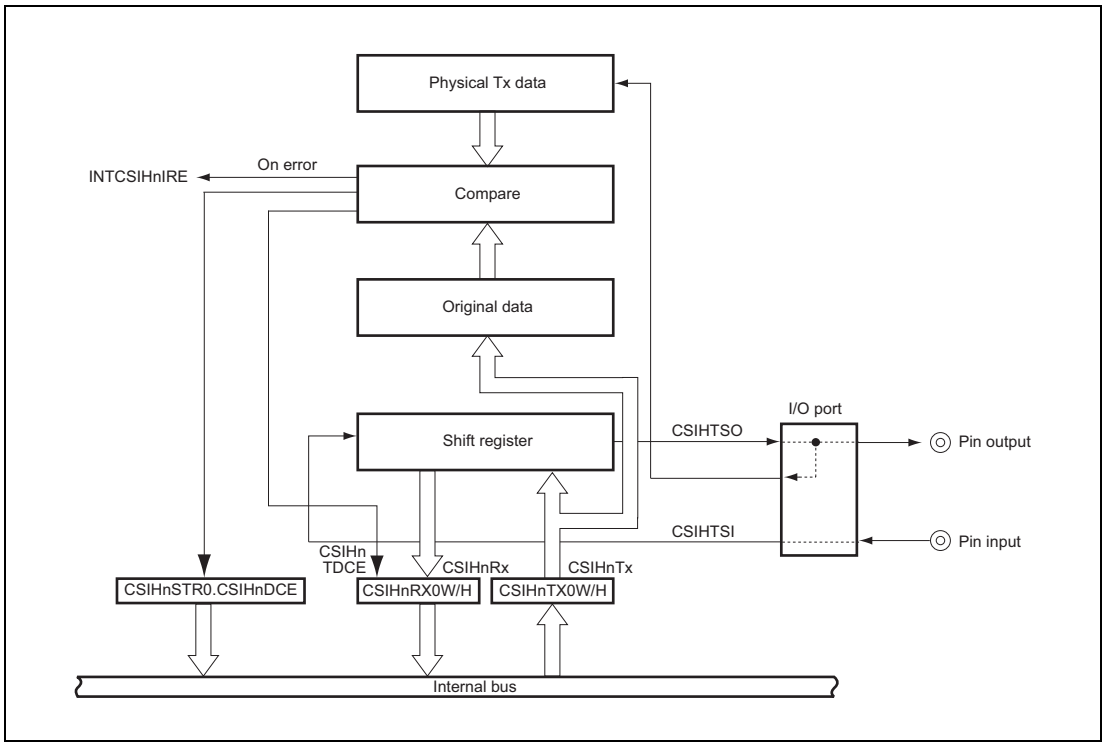

Figure 14.36 Data Consistency Check Functional Block Diagram

14.5.12.2 Parity Check

CSIH can append a parity bit to the last data bit (even if extended data length is used).

The use and type of parity is specified in CSIHnCFGx.CSIHnPSx[1:0].

Parity check is enabled if CSIHnCFGx.CSIHnPSx[1] = 1.

The parity bit is checked after a reception is complete. In case of parity error:

- Interrupt INTCSIHnIRE is generated.
- Bit CSIHnSTR0.CSIHnPE is set.

Additionally, CSIHnRX0W.CSIHnRPE of data that contains the error is set.

The figure below shows an example.

- Data length is 8 bits.
- The data to be transmitted is 05_H and 35_H.
- Data direction is LSB first.
- Parity type is odd.

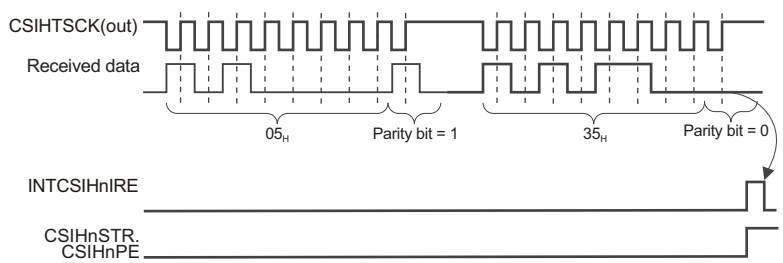

Figure 14.37 Parity Check Example

The parity bit of the first data is 1. There is no parity error, because the total number of ones (including the parity bit) is odd.

The parity bit of the second data is 0. This is detected as a parity error, because the total number of ones (including the parity bit) is even.

If the EDL (extended data length) function is used, the parity bit is added after the last bit of the data.

14.5.12.3 Time-Out Error

Time-out errors can be checked only in slave FIFO mode.

This error occurs if neither of the following occurred within a certain period of time:

- Received data in FIFO is read
- FIFO receives data from CSIHTSI

The time is defined in CSIHnMCTL0.CSIHnTO[4:0] in multiples of 8 times the transmission clock, CSITSCK. A time-out error occurs when the specified time is exceeded (The time-out time is not detected when CSIHnMCTL0.CSIHnTO[4:0] = 00000_B).

The dedicated time-out counter is set by the CSIHnCTL2.CSIHnPRS[2:0] and CSIHnBRSy.CSIHnBRS[11:0] bits.

The CSIHnBRSy.CSIHnBRS[11:0] bits is left as set at 000_H, the dedicated time-out counter does not operate.

A dedicated time-out counter measures the time between the last and the next read operation.

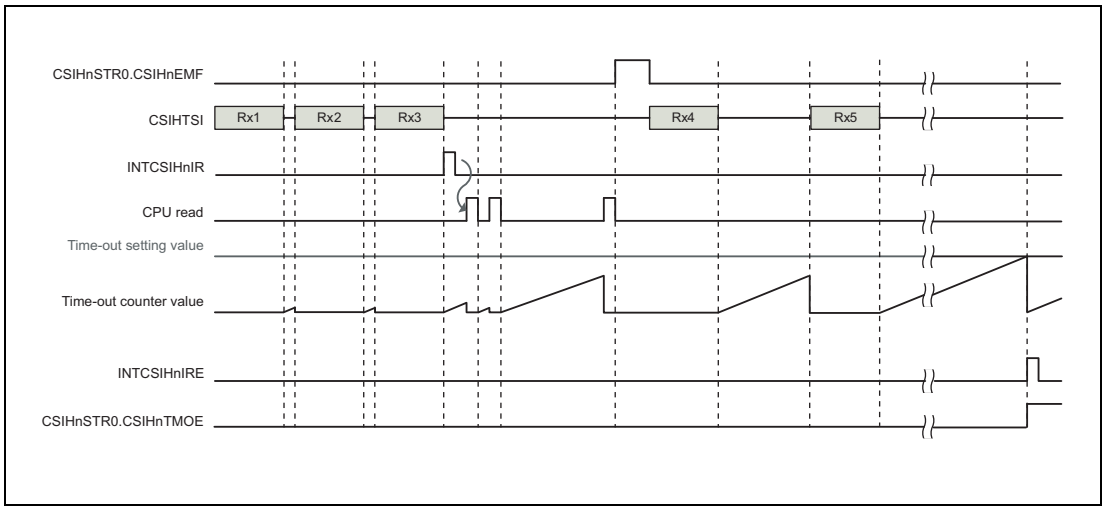

Figure 14.38 Time-Out Check Functional Timing Diagram

The start timing of the time-out counter is as follows:

- When reception is completed
- When data read from the CPU completes
  (The counter does not start if the buffer is empty.)
- When a time-out error is detected

After a time-out error is detected, if data is still available in FIFO, the time-out counter restarts.

If the value set by bit CSIHnMCTL0.CSIHnTO[4:0] is reached again, the INTCSIHnIRE interrupt is output again.

The timeout counter continues to count as long as receive data is not read. To stop the counter, read all received data or set CSIHnSTCR0.CSIHnPCT to 1. Note that the pointer is cleared if you perform the latter.

The counter is reset at the following timing:

- Data is read once.

- New data is received.
- A timeout error is detected.
- The CSIHnSTCR0.CSIHnPCT bit is set to 1.

If a timeout error occurs, the following occurs:

- Interrupt INTCSIHnIRE is generated.
- Bit CSIHnSTR0.CSIHnTMOE is set.

14.5.12.4 Overflow Error

An overflow error can happen in FIFO mode. It occurs when transmission data is written to the CSIHnTX0W register while the FIFO buffer is filled with received data.

Example

100 data have been transmitted. That is, the FIFO contains 100 received data. The application starts to read the received data.

While the read operation is in progress, the application begins to write another set of 50 transmission data to the FIFO.
However, only 10 received data have been read up to now and 90 data are still in the FIFO.

In this case, only 38 cells are available for new transmission data. When the CPU tries to write the 39th data, an overflow error occurs.

This is illustrated in the following figure.

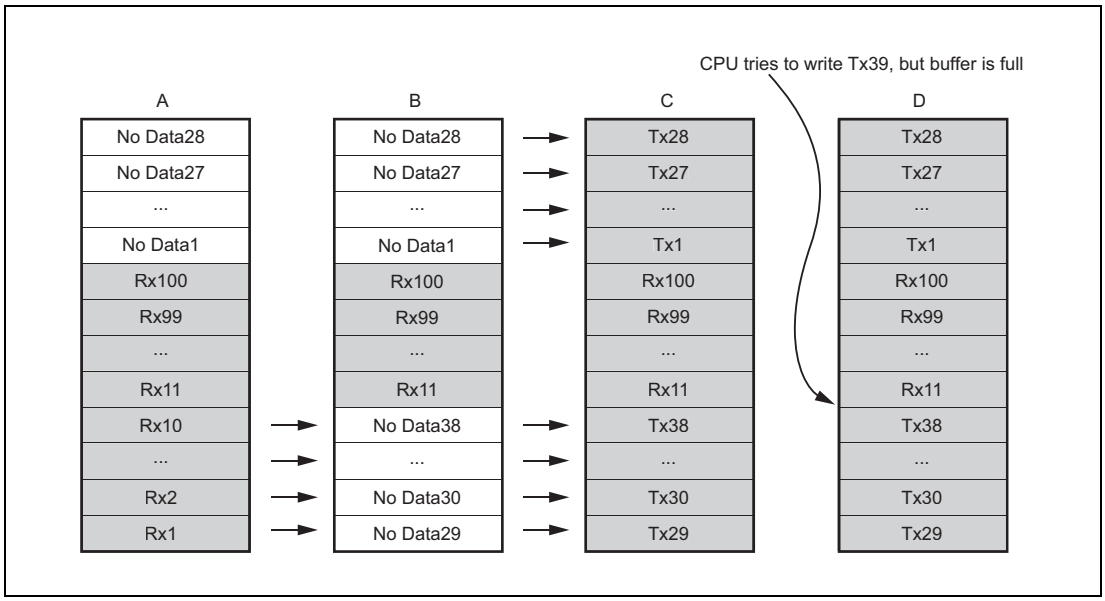

Figure 14.39 FIFO Overview

Data after 39 are discarded. The figure below shows the overflow timing.

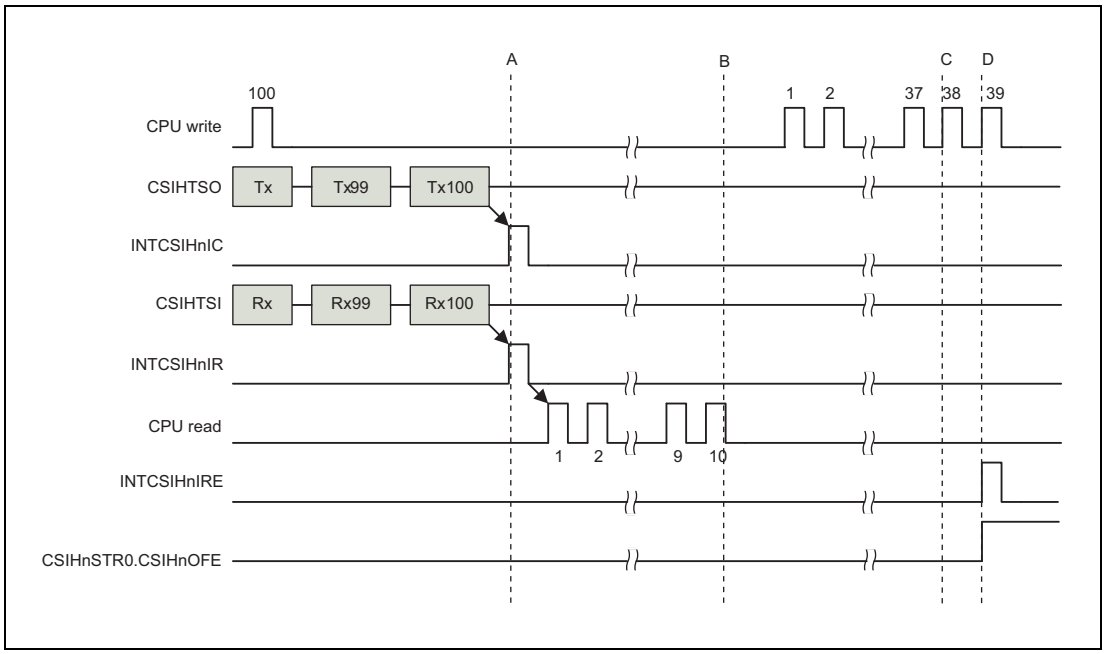

Figure 14.40 FIFO Overflow Timing

In case of overflow error:

- Interrupt INTCSIHnIRE is generated.
- Bit CSIHnSTR0.CSIHnOFE is set.

14.5.12.5 Overrun Error

An overrun error can happen in direct access, transmit-only buffer, and FIFO modes. It cannot happen in dual buffer mode. The overrun error is not generated if data reception is disabled (CSIHnCTL0.CSIHnRXE = 0).

An overrun error occurs under the two conditions below.

(Error occurrence condition 1)

- When the CPU reads the CSIHnRX0W/H register with no receive data remaining in FIFO mode

(Error occurrence condition 2)

- When CSIHnCTL1.CSIHnHSE = 0 (handshake function disabled) in slave mode
  - When reception is completed with the previous receive data remaining in the CSIHnRX0W/H register in direct access mode or transmit-only buffer mode
  - When reception is completed while the FIFO buffer is full of receive data in FIFO mode

(1) Direct access/transmit-only buffer

In direct access and transmit-only buffer mode, this error occurs when newly received data cannot be transferred from the shift register to the reception register CSIHnRX0W/H. This happens when CSIHnRX0W/H was not read and therefore contains previous reception data.

The following figure illustrates the function.

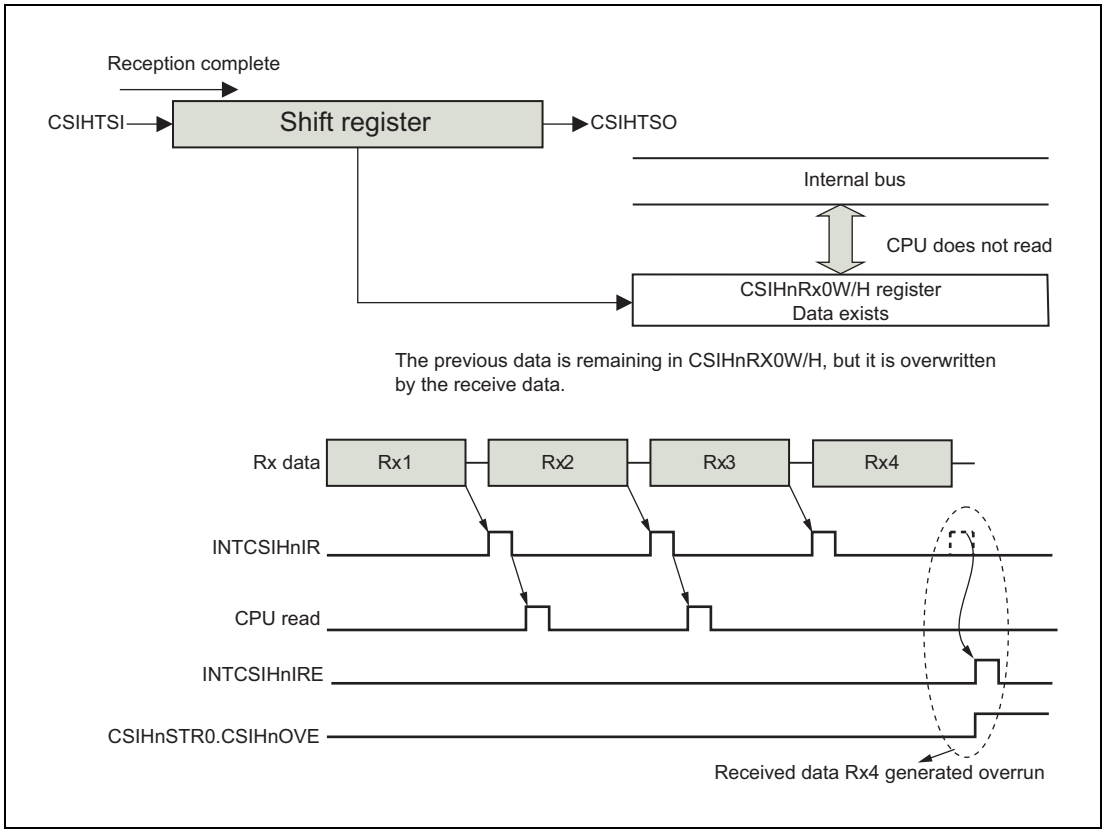

Figure 14.41 Overrun Error Detection in Direct Access and Transmit-Only Buffer Mode

NOTE

An overrun error can be avoided in slave mode by using the handshake function.
When handshake is used in slave mode, the receiver (slave) signals to the transmitter (master) that it is busy. The transmitter then waits until the receiver has read its reception register and is ready again.

(2) FIFO mode

In FIFO mode, this error occurs if:

1. New data is received while the FIFO is full and the old data in the buffer is overwritten.

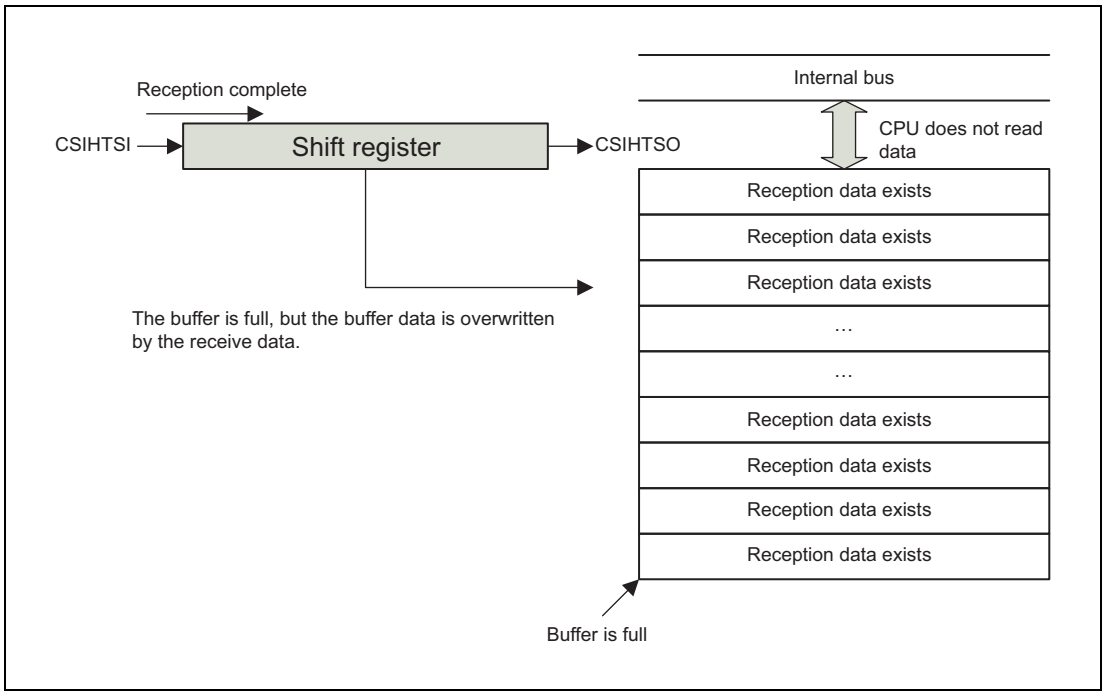

Figure 14.42 Overrun Error Detection in FIFO Mode (FIFO Full)

NOTE

An overrun error can be avoided in slave mode by using the handshake function.
When handshake is used in slave mode, the receiver (slave) signals to the transmitter (master) that it is busy. The transmitter then waits until the receiver has read its reception register and is ready again.

2. The CPU attempts to read non existing reception data.

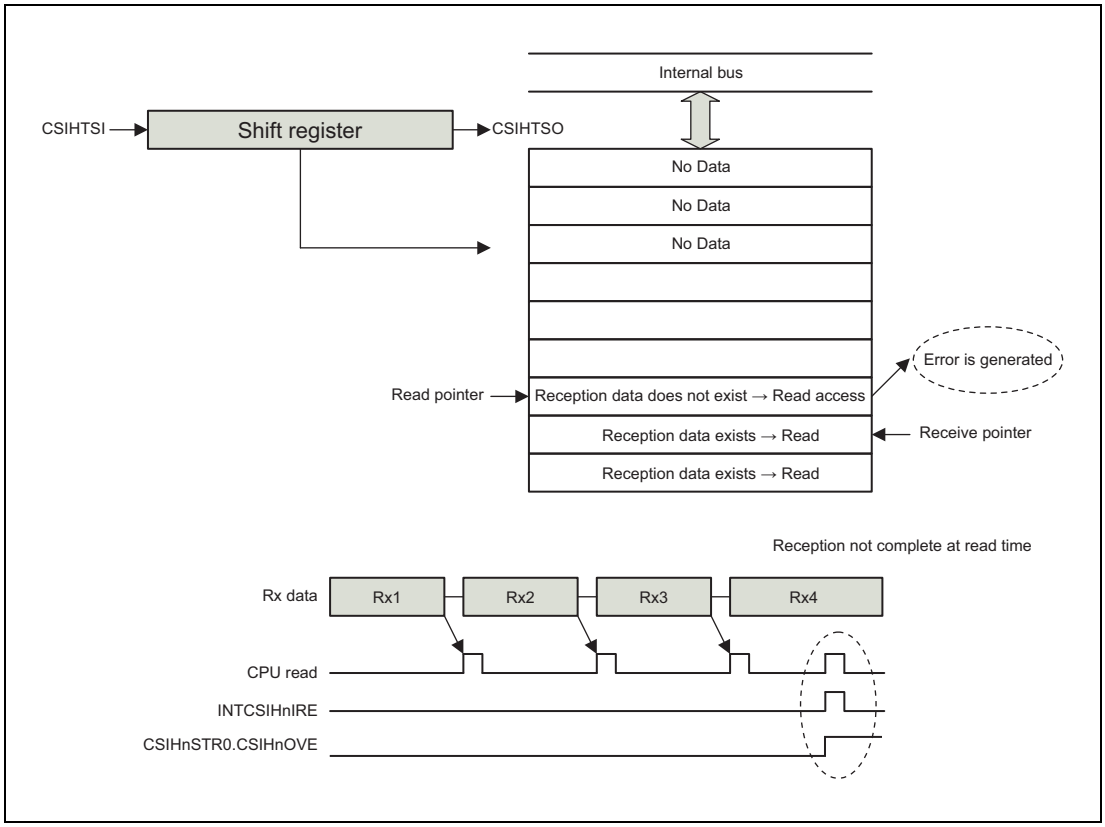

Figure 14.43 Overrun Error Detection in FIFO Mode (No Data)

In case of overrun error:

- Interrupt INTCSIHnIRE is generated.
- Bit CSIHnSTR0.CSIHnOVE is set.
- Receive data is overwritten and communication continues.
  (The CPU can read received data after reception is completed.)

For details see **Section 14.5.11, Handshake Function**.

14.5.13 Loop-Back Mode

Loop-back mode is a special mode for self-test. This feature is only available in master mode.

When this mode is active (CSIHnCTL1.CSIHnLBM = 1), CSIHTCSSx is fixed to the inactive level (the active level is defied by the CSIHnCTL1.CSIH0CSLx value). The transmit and receive signals are internally connected, as shown in the figures below. The signals CSIHTSCK, CSIHTSO, and CSIHTSI are disconnected from the ports. In addition, the CSIHTSO output level is fixed to low, and CSIHTSCK is set to high level regardless of the CSIHnCFGx.CSIHnCKPx value.

In order to test CSIH, put it in loop-back mode and carry out normal transfer operations. Then check that the received data is the same as the transmitted data. The loopback test does not affect connected devices.

Table 14.48 Pin Output Level when Loopback Mode is Used

Pin Name	Output Level
CSIHTSCK(out)	High level
CSIHTCSS[7:0]	Inactive level
CSIHTSO	Low level (independent of the previous value)
Interrupt	Normal function
CSIHTRYO	Normal function (low level)

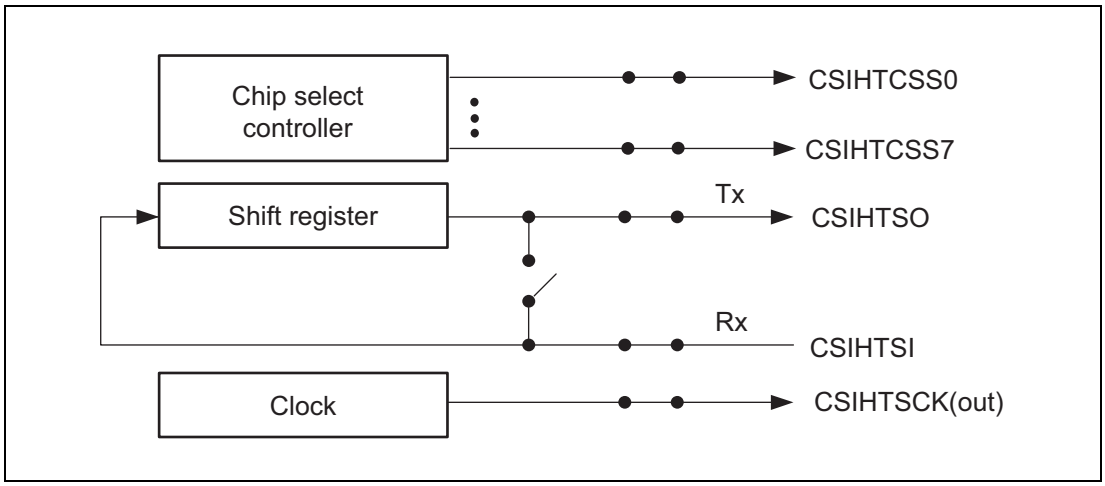

Figure 14.44 Normal Operation

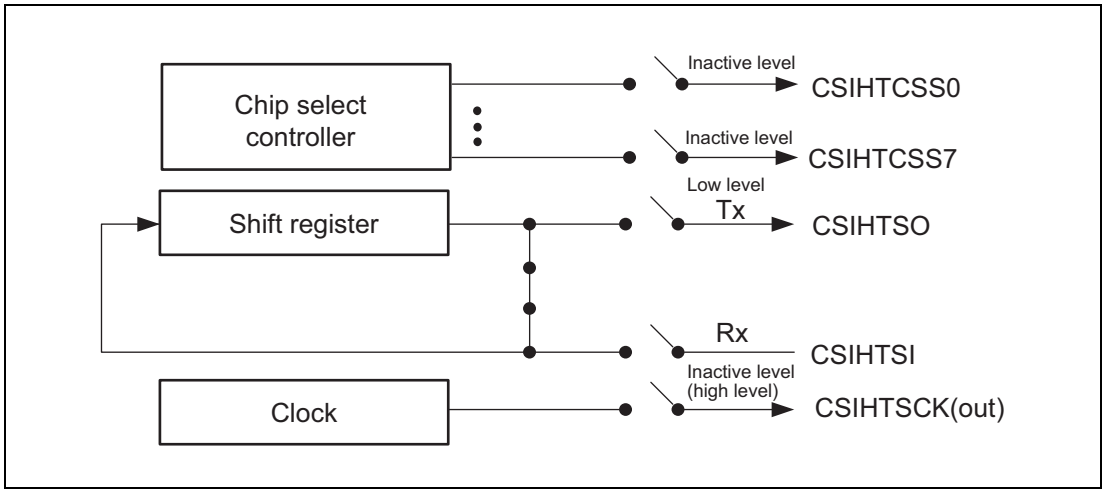

Figure 14.45 Loopback Mode Operation

14.5.14 CPU-Controlled High Priority Communication Function

CSIH has a function to abort low priority communication to perform high priority communication if it receives a high-priority communication request from the CPU while low-priority communication is being used. This function supports transmit-only buffer mode as low priority communication and direct access mode as high-priority communication only.

To enable this function, set CSIHnCTL1.CSIHnPHE = 1 and CSIHnCTL1.CSIHnJE = 1.

The following figure illustrates CPU-controlled high-priority communication.

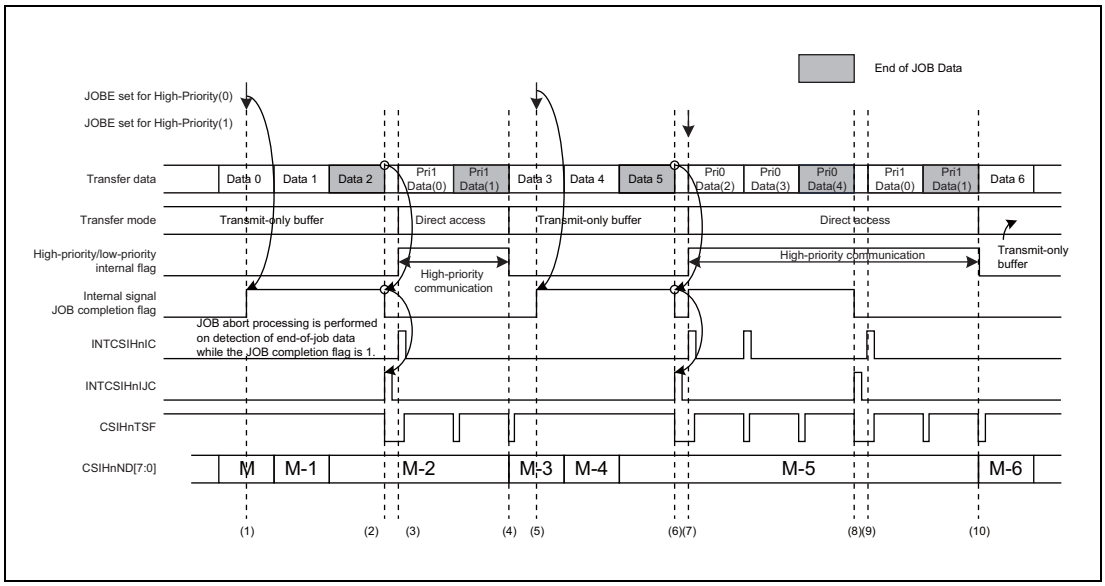

Figure 14.46 Example of CPU-Controlled High-Priority Communication

(1) By setting CSIHnCTL0.CSIHnJOBE = 1 during low-priority communication, start of high-priority communication following end-of-job data is notified, and the internal signal flag is set.

(2) When end-of-job data is detected, the current low-priority communication is aborted and the INTCSIHnIJC interrupt occurs. An internal signal, the JOB completion flag is cleared due to the abortion of communication, and memory mode is automatically switched to direct access mode for the subsequent high-priority communication.

(3) The CPU detects the interrupt and starts communication by writing the first transmission data of high-priority communication to CSIHnTX0W or CSIHnTX0H.

(4) When end-of-job data is detected, communication is aborted. At this time, because the internal signal, end-of-job flag is set to 0, the CSIH determines that the next communication is low-priority and switches memory mode to transmit-only buffer mode automatically, and then resumes the aborted low-priority communication.

(5) Same as (1) above.

(6) Same as (2) above.

(7) The CPU detects an interrupt and starts communication by writing the first transmission data of high-priority communication to CSIHnTX0W or CSIHnTX0H. The CPU sets CSIHnCTL0.CSIHnJOBE = 1 again to notify that the next communication is high-priority.

(8) When end-of-job data is detected, communication is aborted and the INTCSIHnIJC interrupt is generated. At this time, the CPU determines that the subsequent communication is high-priority because the internal signal end-of-job flag is 1, and waits for communication to start.

(9) Same as (3) above.

(10) Same as (4) above.

CAUTION

Memory mode is switched automatically when communication is changed from low priority to high priority (switch from transmit-only buffer mode to direct access mode) and from high priority to low priority (switch from direct access mode to transmit-only buffer mode).

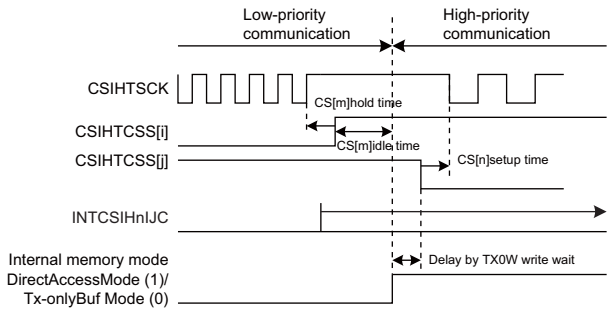

Figure 14.47 Transition from Low-Priority Mode to High-Priority Mode

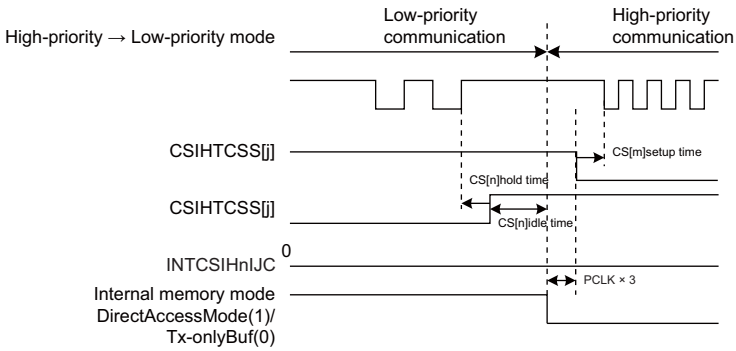

Figure 14.48 Transition from High-Priority Mode to Low-Priority Mode

To correctly switch low-priority communication mode and high-priority communication mode, do not write communication data or manipulate the CSIHnCTL0.CSIHnJOBE bit during the setting prohibited time period.

CSIHnTX0W register write prohibited time period:

- A time period from CSIHnJOBE bit setting for transition to high-priority communication mode until an INTCSIHnIJC interrupt is detected
- A time period from the last end-of-job data write of high-priority communication until (CSIHnHPST state = 0) is detected

CSIHnJOBE register write prohibited time period:

- A time period from CSIHnJOBE bit setting for transition to high-priority communication mode until an INTCSIHnIJC interrupt is detected

There is no setting prohibited time period of the CSIHnJOBE bit during the high-priority communication mode. It is also possible to set the CSIHnJOBE bit before writing communication data. For example, when it has been made clear in advance that multiple job data are sent and received in high-priority communication mode, the CSIHnJOBE bit can be set before the first transmission data is written.

CAUTION

If the CSIHnJOBE bit is set immediately before the last high-priority communication ends, operation differs depending on the timing for internally detecting the CSIHnJOBE bit setting.

When the CSIHnJOBE bit setting is detected before communication of the last bit is completed, high-priority communication mode continues.

When the CSIHnJOBE bit setting is detected after communication of the last bit has been completed, low-priority communication mode is restored and then end-of-job data of low-priority communication is detected and mode changes again to high-priority communication mode.

14.5.15 Enforced Chip Select Idle Setting

This macro is able to insert an idle state between the two consecutive transfer data by the setting of CSIHnCFGx.CSIHnIDLx. Detail is as follows.

1. When CSIHnCFGx.CSIHnIDLx = 0
   If a next CSIHTCSSx is the same as the previous one, an idle state is not inserted and an inter-data time is inserted.
   If a next CSIHTCSSx is different from the previous one, an idle state is inserted.
2. When CSIHnCFGx.CSIHnIDLx = 1
   An idle state is always inserted even if a next CSIHTCSSx is not different from the previous one.

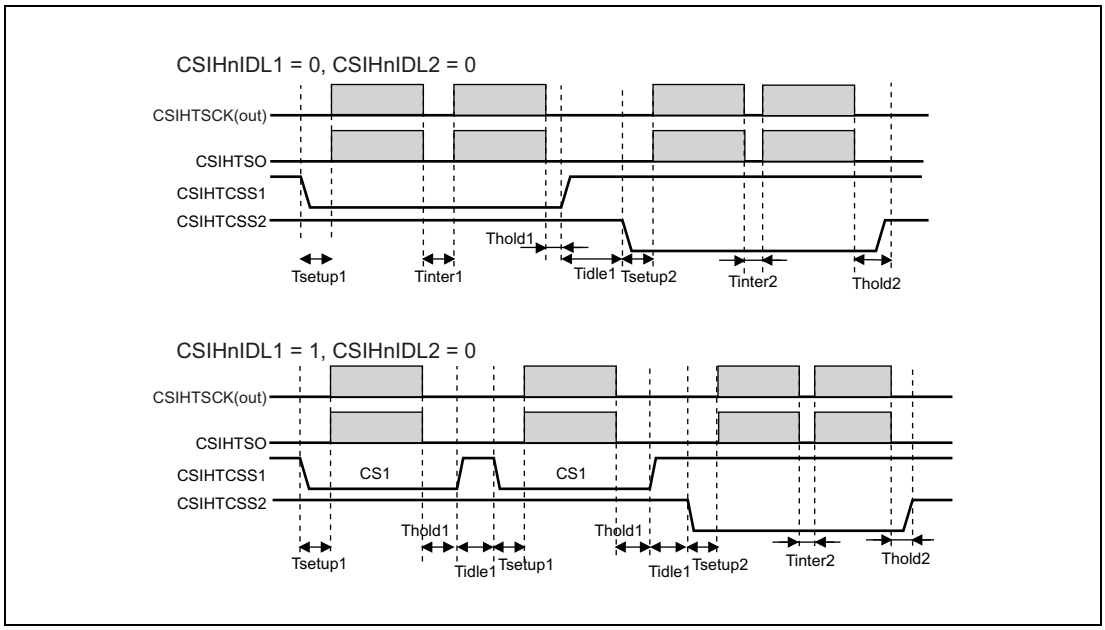

Figure 14.49 Enforced Chip Select Idle Example

CAUTION

If high priority communication function controlled by CPU is validated (CSIHnCTL1.CSIHnPHE = 1), when switch from low priority communication mode to high priority communication mode or switch from high priority communication mode to low priority communication mode, IDLE state is inserted regardless of IDLx.

14.6 Operating Procedures

The examples and procedures below are described according to the memory mode in the following order:

- Direct access mode
- Transmit-only buffer mode
- Dual buffer mode
- FIFO mode

14.6.1 Procedures in Direct Access Mode

Two examples for a master are provided, one with job mode disabled, and the other one with job mode enabled.

14.6.1.1 Transmit/Receive in Master Mode when Job Mode is Disabled

The procedures below is based on the assumption that:

- The transmission data length is 8-bits (CSIHnCFGx.CSIHnDLSx[3:0] = 1000_B).
- Transmission direction is MSB first (CSIHnCFGx.CSIHnDIRx = 0).
- Normal clock and data phase (CSIHnCFGx.CSIHnCKPx = 0, CSIHnCFGx.CSIHnDAPx = 0)
- No interrupt delay (CSIHnCTL1.CSIHnSIT = 0)
- Job mode is disabled (CSIHnCTL1.CSIHnJE = 0).
- Normal INTCSIHnIC interrupt timing (CSIHnCTL1.CSIHnSLIT = 0)
- Direct access mode (CSIHnCTL0.CSIHnMBS = 1)

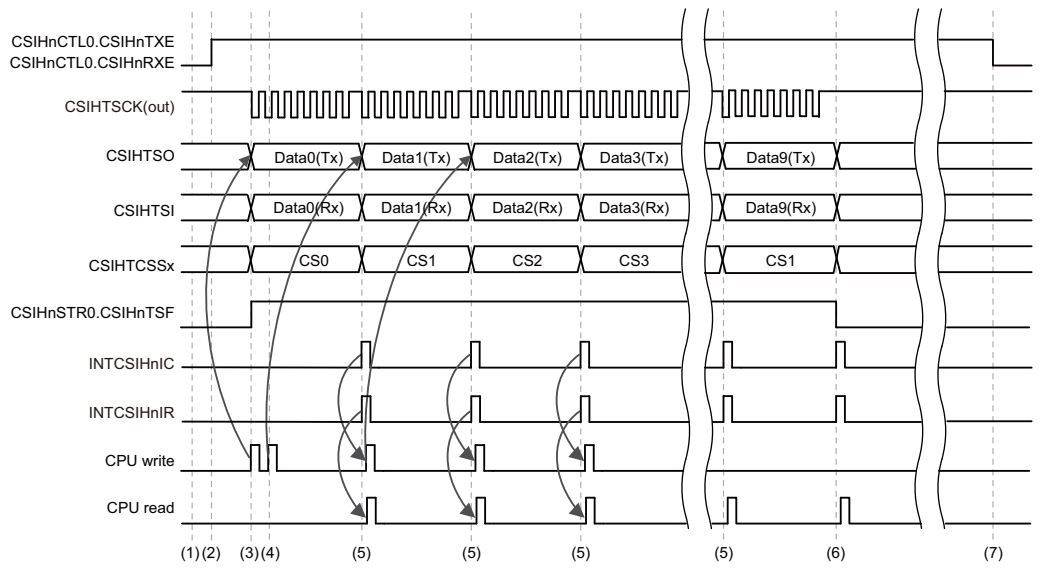

Figure 14.50 Master in Direct Access Mode, CSIHnCTL1.CSIHnJE = 0

Procedure:

1. Configure the communication protocol in the CSIHnCFGx register. This example uses chip select signals CS0 to CS3.
   Specify the transfer mode and job mode by setting the corresponding bits in registers CSIHnCTL1 and CSIHnCTL2.
2. In the CSIHnCTL0 register, set bits CSIHnPWR = 1 (enables the clock), CSIHnTXE = 1 (permits transmission), CSIHnRXE = 1 (permits reception), and CSIHnMBS = 1 (selects direct access mode).
3. Write the first transmission data to the transmission register CSIHnTX0W. Within the same write operation, activate CS0. Transmission starts automatically when the first data becomes available.
4. Write the second data to CSIHnTX0W. If required, you can change the CS to address a different device. Writing the second data immediately after the first one avoids unnecessary delays between data.
5. Each time data is transmitted and received, INTCSIHnIC and INTCSIHnIR interrupts are generated.
   - INTCSIHnIC indicates that the next data can be written to CSIHnTX0W.
   - INTCSIHnIR indicates that the reception register, CSIHnRX0W must be read.
6. No more write action is required after completion of transmission of data 8. Data 9 (the last data) has been written when a successful transmission interrupt of data 7 was generated. However, reception register CSIHnRX0W must be read after completion of writing data 8 and 9.
7. Finally, clear CSIHnCTL0.CSIHnTXE and CSIHnCTL0.CSIHnRXE to prohibit the transmit/receive operation. When communication is not performed, set CSIHnCTL0.CSIHnPWR = 0 to minimize the power consumption of CSIHn.

14.6.1.2 Transmit/Receive in Master Mode when Job Mode is Enabled

The procedure below is based on the assumption that:

- The transmission data length is 8-bits (CSIHnCFGx.CSIHnDLSx[3:0] = 1000_B).
- Transmission direction is MSB first (CSIHnCFGx.CSIHnDIRx = 0).
- Normal clock and data phase (CSIHnCFGx.CSIHnCKPx = 0, CSIHnCFGx.CSIHnDAPx = 0)
- No interrupt delay (CSIHnCTL1.CSIHnSIT = 0)
- Job mode is enabled (CSIHnCTL1.CSIHnJE = 1).
- Normal INTCSIHnIC interrupt timing (CSIHnCTL1.CSIHnSLIT = 0)
- Direct access mode (CSIHnCTL0.CSIHnMBS = 1)
- Two jobs, each of them transmits three data.

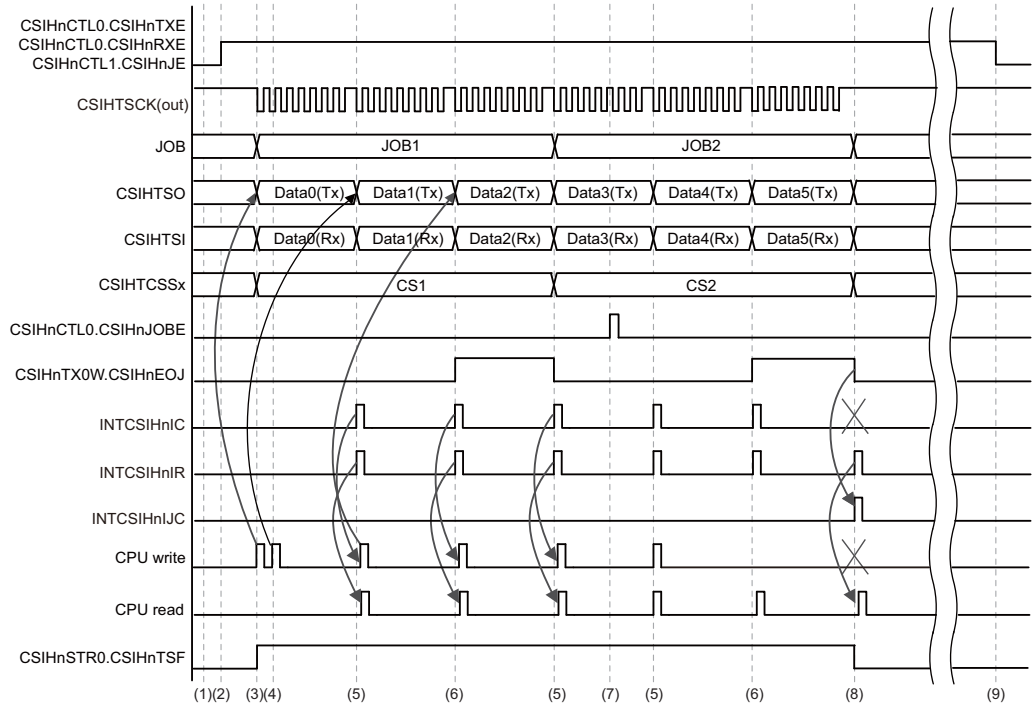

Figure 14.51 Master in Direct Access Mode, CSIHnCTL1.CSIHnJE = 1

Procedure:

1. Configure the communication protocol in the CSIHnCFGx register. This example uses chip select signals CS1 and CS2.
   Specify the transfer mode and job mode by setting the corresponding bits in registers CSIHnCTL1 and CSIHnCTL2.
2. In the CSIHnCTL0 register, set the bits CSIHnPWR = 1 (enables the clock), CSIHnTXE = 1 (permits transmission), CSIHnRXE = 1 (permits the reception), and CSIHnMBS = 1 (selects direct access mode).
3. Write the first transmission data to the transmission register CSIHnTX0W. Transmission starts automatically when the first data becomes available.
   The CSIHnSTR0.CSIHnTSF flag indicates that communication is in progress.
4. Write the second data to CSIHnTX0W. Writing the second data immediately after the first one avoids unnecessary delays between data.
5. Each time data is transmitted and received, INTCSIHnIC and INTCSIHnIR interrupts are generated.
   - INTCSIHnIC indicates that the next data can be written to CSIHnTX0W.
   - INTCSIHnIR indicates that the reception register, CSIHnRX0W must be read.
6. Setting CSIHnTX0W.CSIHnEOJ = 1 indicates that the last data of the current job is transmitted.
7. By setting CSIHnCTL0.CSIHnJOBE = 1, communication is forced to stop at the end of the current job (JOB2).
8. After the forced stop of communication, the interrupt request, INTCSIHnIC is replaced by INTCSIHnIJC. INTCSIHnIR is generated as usual.
   The interrupt request, INTCSIHnIJC indicates a forced stop of communication at the end of the current job.
   The interrupt request, INTCSIHnIC is not generated. Additionally, the transmission data available in the CSIHnTX0W register is not transmitted.
9. Finally, clear CSIHnCTL0.CSIHnTXE and CSIHnCTL0.CSIHnRXE to prohibit the transmit/receive operation. When communication is not performed, set CSIHnCTL0.CSIHnPWR = 0 to minimize the power consumption of CSIHn.

To start another transmission without stopping communication, perform steps 3 and later.

14.6.2 Procedures in Transmit-Only Buffer Mode

Two examples for a master is provided, one with job mode disabled, and the other one with job mode enabled.

14.6.2.1 Transmit/Receive in Master Mode when Job Mode is Disabled

The procedure below is based on the assumption that:

- The transmission data length is 8-bits (CSIHnCFGx.CSIHnDLSx[3:0] = 1000_B).
- The transmission direction is MSB first (CSIHnCFGx.CSIHnDIRx = 0).
- Normal clock and data phase (CSIHnCFGx.CSIHnCKPx = 0, CSIHnCFGx.CSIHnDAPx = 0)
- No interrupt delay (CSIHnCTL1.CSIHnSIT = 0)
- Job mode is disabled (CSIHnCTL1.CSIHnJE = 0).
- Number of data: 9 (CSIHnMCTL2.CSIHnND[7:0] = 09_H).
- The transfer start address is 10_H (CSIHnMCTL2.CSIHnSOP[6:0] = 10_H).
- Normal INTCSIHnIC interrupt timing (CSIHnCTL1.CSIHnSLIT = 0)
- Transmit-only buffer mode (CSIHnCTL0.CSIHnMBS = 0, CSIHnMCTL0.CSIHnMMS[1:0] = 10_B)

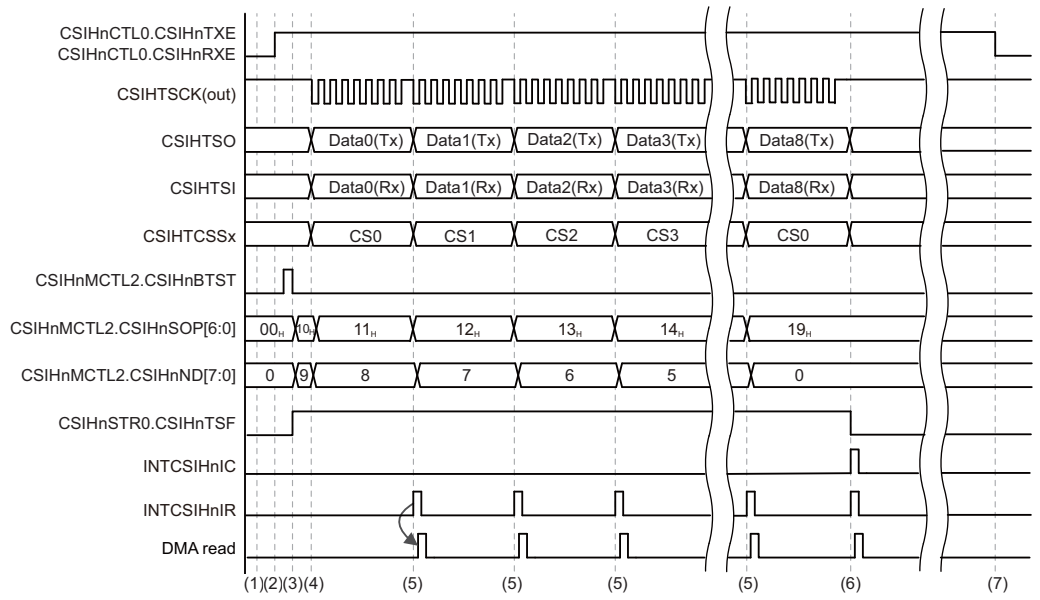

Figure 14.52 Master in Transmit-Only Buffer Mode, CSIHnCTL1.CSIHnJE = 0

NOTE

The procedure of writing the data into the buffer is not described.

Procedure:

1. Configure the communication protocol in the CSIHnCFGx register. This example uses chip select signals CSIHTCSS0 to CSIHTCSS3.
   Specify the transfer and operating modes by setting the corresponding bits in registers CSIHnCTL1 and CSIHnCTL2.
   Set the memory mode by CSIHnMCTL0.CSIHnMMS[1:0].
   Set CSIHnMCTL0.CSIHnMMS[1:0] to 10_B (transmit-only buffer mode).
2. In the CSIHnCTL0 register, set the bits CSIHnPWR = 1 (enables the clock), CSIHnTXE = 1 (permits transmission) and CSIHnRXE = 1 (permits reception). The CSIHnCTL0.CSIHnMBS bit must be cleared.
3. Set bits CSIHnMCTL2.CSIHnSOP[6:0] and bits CSIHnMCTL2.CSIHnND[7:0] to specify the transmission pointer and the number of data.
   Start buffer transfer by setting CSIHnMCTL2.CSIHnBTST.
4. Data transmission and reception start. Bits CSIHnMCTL2.CSIHnSOP[6:0] are automatically incremented and bits CSIHnMCTL2.CSIHnND[7:0] are decremented each time a piece of data is transmitted.
5. An interrupt request INTCSIHnIR is generated each time a piece of data is received. INTCSIHnIR indicates that the reception register, CSIHnRX0W must be read.
6. When all transmissions are completed, the interrupt request, INTCSIHnIC is generated.
7. Finally, clear CSIHnCTL0.CSIHnTXE and CSIHnCTL0.CSIHnRXE to prohibit the transmit/receive operation. When communication is not performed, set CSIHnCTL0.CSIHnPWR = 0 to minimize the power consumption of CSIHn.

14.6.2.2 Transmit/Receive in Master Mode when Job Mode is Enabled

The procedure below is based on the assumption that:

- The transmission data length is 8-bits (CSIHnCFGx.CSIHnDLSx[3:0] = 1000_B).
- The transmission direction is MSB first (CSIHnCFGx.CSIHnDIRx = 0).
- Normal clock and data phase (CSIHnCFGx.CSIHnCKPx = 0, CSIHnCFGx.CSIHnDAPx = 0)
- No interrupt delay (CSIHnCTL1.CSIHnSIT = 0)
- Job mode is enabled (CSIHnCTL1.CSIHnJE = 1).
- Number of data: 8 (CSIHnMCTL2.CSIHnND[7:0] = 08_H).
- The transfer start address is 10_H (CSIHnMCTL2.CSIHnSOP[6:0] = 10_H).
- Normal INTCSIHnIC interrupt timing (CSIHnCTL1.CSIHnSLIT = 0)
- Transmit-only buffer mode (CSIHnCTL0.CSIHnMBS = 0, CSIHnMCTL0.CSIHnMMS[1:0] = 10_B)

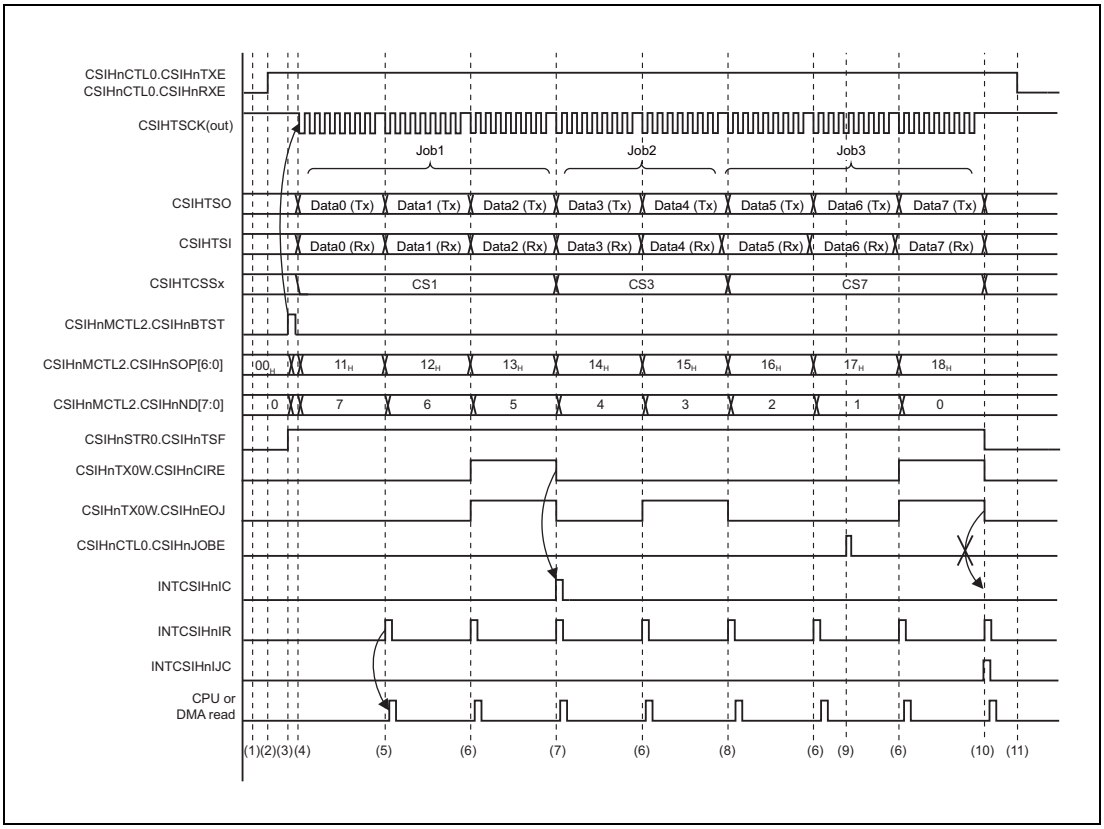

Figure 14.53 Master in Transmit-Only Buffer Mode, CSIHnCTL1.CSIHnJE = 1

NOTE

In this section, the process of writing data to the buffer is not described.

Procedure:

1. Configure the communication protocol in the CSIHnCFGx register.This example uses chip select signals CS1, CS3, and CS7.
   Specify the transfer mode and job mode by setting the corresponding bits in registers CSIHnCTL1 and CSIHnCTL2.
   Set the memory mode by CSIHnMCTL0.CSIHnMMS[1:0].
   Set CSIHnMCTL0.CSIHnMMS[1:0] to 10_B (transmit-only buffer mode).
2. In the CSIHnCTL0 register, set bits CSIHnPWR = 1 (enables the clock), CSIHnTXE = 1 (permits transmission), and CSIHnRXE = 1 (permits reception). The CSIHnCTL0.CSIHnMBS bit must be cleared.
3. Set bits CSIHnMCTL2.CSIHnSOP[6:0] and bits CSIHnMCTL2.CSIHnND[7:0] to specify the transmission pointer and the number of data. Start the buffer transfer by setting CSIHnMCTL2.CSIHnBTST.
4. Transmission is started. Bits CSIHnMCTL2.CSIHnSOP[6:0] are automatically incremented and bits CSIHnMCTL2.CSIHnND[7:0] are decremented each time a piece of data is transmitted.
5. An interrupt request INTCSIHnIR is generated each time a piece of data is received. INTCSIHnIR indicates that the reception register, CSIHnRX0W must be read.
6. The CSIHnTX0W.CSIHnEOJ = 1 setting indicates that the last data of the current job is transmitted.
7. The interrupt request INTCSIHnIC is generated. INTCSIHnIC indicates that the last data of the current job (CSIHnTX0W.CSIHnEOJ = 1) was transmitted with CSIHnTX0W.CSIHnCIRE = 1.
8. The INTCSIHnIC interrupt request is not generated because the last data of the current job (CSIHnTX0W.CHABnEOJ = 1) was transmitted with CSIHnTX0W.CSIHnCIRE = 0.
9. By setting CSIHnCTL0.CSIHnJOBE = 1, communication is forced to stop at the end of JOB3.
10. After the forced stop of communication, interrupt requests INTCSIHnIJC and INTCSIHnIR are generated at the end of job3.
    The INTCSIHnIJC interrupt request indicates a forced stop of communication at the end of the current job.
    The INTCSIHnIC interrupt request is not generated because the INTCSIHnIJC interrupt request is generated instead of the INTCSIHnIC interrupt request. Additionally, the transmission data available in the CSIHnTX0W register is not transmitted.
11. Finally, clear CSIHnCTL0.CSIHnTXE and CSIHnCTL0.CSIHnRXE to prohibit the transmit/receive operation. When communication is not performed, set CSIHnCTL0.CSIHnPWR = 0 to minimize the power consumption of CSIHn.

14.6.3 Procedures in Dual Buffer Mode

The following examples are provided: those with job mode enabled and disabled during master mode, and one with job mode disabled during slave mode.

14.6.3.1 Transmit/Receive in Master Mode when Job Mode is Disabled

The procedure below is based on the assumption that:

- The transmission data length is 8-bits (CSIHnCFGx.CSIHnDLSx[3:0] = 1000_B).
- The transmission direction is MSB first (CHIHnCFGx.CSIHnDIRx = 0).
- Default clock and data phase (CSIHnCFGx.CSIHnCKPx = 0, CSIHnCFGx.CSIHnDAPx = 0)
- No interrupt delay (CSIHnCTL1.CSIHnSIT = 0)
- Job mode is disabled (CSIHnCTL1.CSIHnJE = 0).
- Number of data: 9 (CSIHnMCTL2.CSIHnND[7:0] = 09_H).
- The transfer start address is 10_H (CSIHnMCTL2.CSIHnSOP[6:0] = 10_H).
- Normal INTCSIHnIC interrupt timing (CSIHnCTL1.CSIHnSLIT = 0)
- Dual buffer mode (CSIHnCTL0.CSIHnMBS = 0, CSIHnMCTL0.CSIHnMMS[1:0] = 01_B)

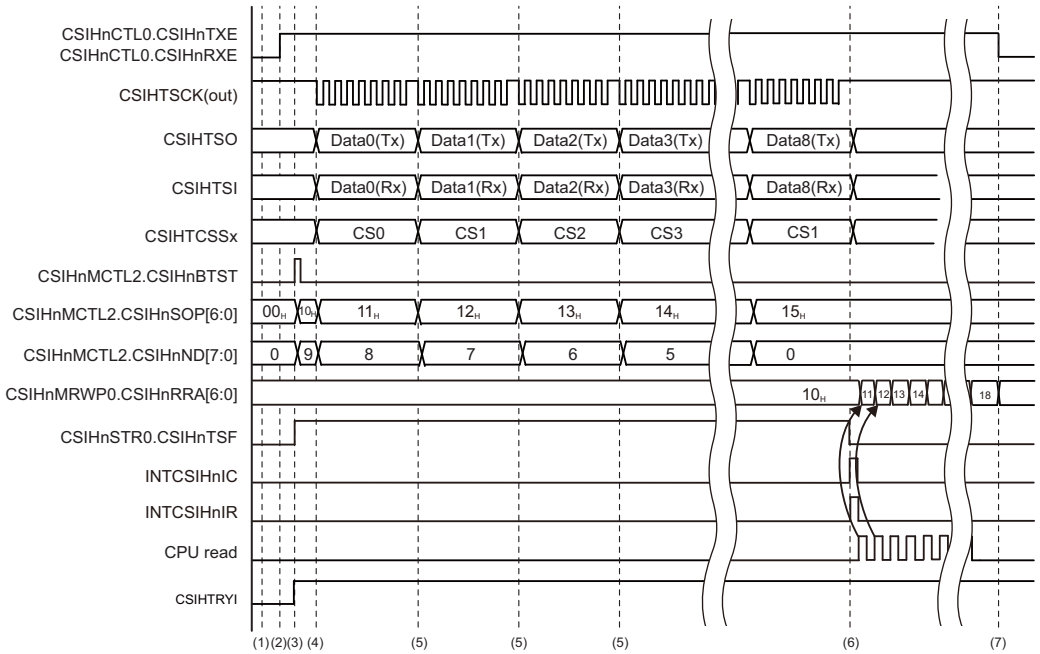

Figure 14.54 Master in Dual Buffer Mode, CSIHnCTL1.CSIHnJE = 0

NOTE

In this section, the process of writing the data into the buffer is not described.

Procedure:

1. Configure the communication protocol in the CSIHnCFGx register. The example uses chip select signals CSIHTCSS0 to CSIHTCSS3.
   Specify the transfer and operating modes by setting the corresponding bits in registers CSIHnCTL1 and CSIHnCTL2.
   Set the memory mode by CSIHnMCTL0.CSIHnMMS[1:0].
   Set CSIHnMCTL0.CSIHnMMS[1:0] to 01_B (dual buffer mode).
2. In the CSIHnCTL0 register, set bits CSIHnPWR = 1 (enables the clock), CSIHnTXE = 1 (permits transmission), and CSIHnRXE = 1 (permits the reception). The CSIHnCTL0.CSIHnMBS bit must be cleared.
3. Configure communication by setting CSIHnMCTL2.CSIHnSOP[6:0] and CSIHnMCTL2.CSIHnND[7:0]. Permit buffer transfer by setting CSIHnMCTL2.CSIHnBTST.
4. Transmission is started. Bits CSIHnMCTL2.CSIHnSOP[6:0] are automatically incremented and bits CSIHnMCTL2.CSIHnND[7:0] are decremented each time a piece of data is transmitted. This is repeated until the last data is transmitted/received.
5. This is repeated until the last data is transmitted/received. The interrupt requests, INTCSIHnIC and INTCSIHnIR are not generated.
6. When the last data is transmitted and received, interrupt requests INTCSIHnIC and INTCSIHnIR are generated.
   The CPU starts to read the received data from the receive buffer. The start adress of the read access is specified in CSIHnMRWP0.CSIHnRRA[6:0]. These bits are incremented each time a piece of data is read.
7. Finally, clear CSIHnCTL0.CSIHnTXE and CSIHnCTL0.CSIHnRXE to prohibit the transmit/receive operation. When communication is not performed, set CSIHnCTL0.CSIHnPWR = 0 to minimize the power consumption of CSIHn.

14.6.3.2 Transmit/Receive in Master Mode when Job Mode is Enabled

The procedure below is based on the assumption that:

- The transmission data length is 8-bits (CSIHnCFGx.CSIHnDLSx[3:0] = 1000_B).
- The transmission direction is MSB first (CSIHnCFGx.CSIHnDIRx = 0).
- Normal clock and data phase (CSIHnCFGx.CSIHnCKPx = 0, CSIHnCFGx.CSIHnDAPx = 0)
- No interrupt delay (CSIHnCTL1.CSIHnSIT = 0)
- Job mode is enabled (CSIHnCTL1.CSIHnJE = 1).
- Number of data: 8 (CSIHnMCTL2.CSIHnND[7:0] = 08_H).
- The transfer start address is 00_H (CSIHnMCTL2.CSIHnSOP[6:0] = 00_H).
- Normal INTCSIHnIC interrupt timing (CSIHnCTL1.CSIHnSLIT = 0)
- Dual buffer mode (CSIHnCTL0.CSIHnMBS = 0, CSIHnMCTL0.CSIHnMMS[1:0] = 01_B)

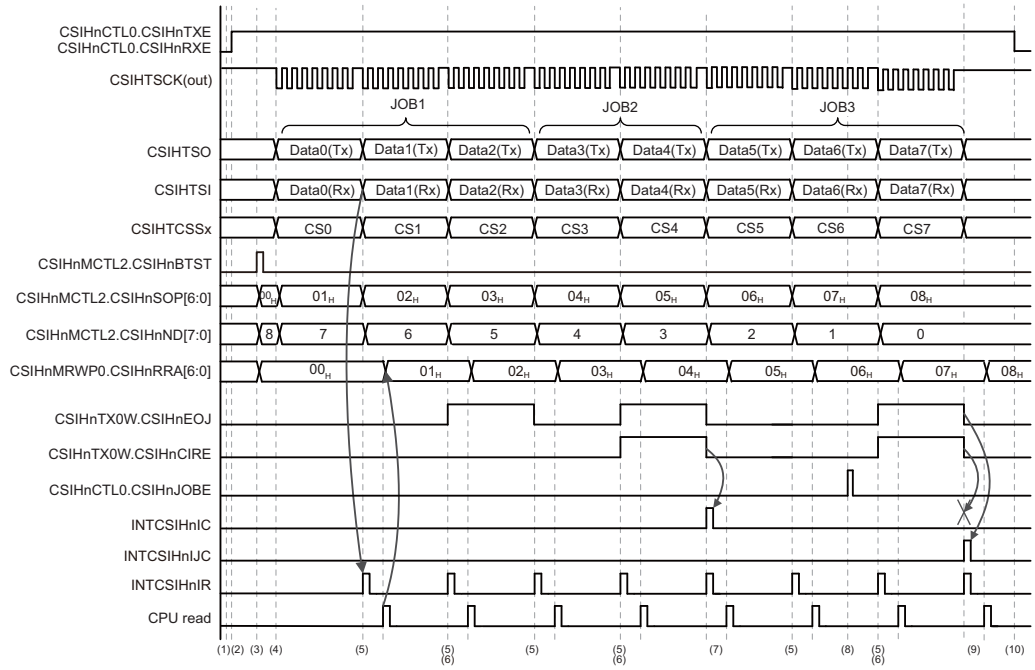

Figure 14.55 Master in Dual Buffer Mode, CSIHnCTL1.CSIHnJE = 1

NOTE

In this section, the process of writing the data into the buffer is not described.

Procedure:

1. Configure the communication protocol in the CSIHnCFGx register. The example uses chip select signals CS0 to CS7.
   Specify the transfer and operating modes by setting the corresponding bits in registers CSIHnCTL1 and CSIHnCTL2.
   Set the memory mode by CSIHnMCTL0.CSIHnMMS[1:0].
   Set CSIHnMCTL0.CSIHnMMS[1:0] to 01_B (dual buffer mode).
2. In the CSIHnCTL0 register, set bits CSIHnPWR = 1 (enables the clock), CSIHnTXE = 1 (permits transmission), and CSIHnRXE = 1 (permits reception). The CSIHnCTL0.CSIHnMBS bit must be cleared.
3. Configure communication by setting bits CSIHnMCTL2.CSIHnSOP[6:0] and CSIHnMCTL2.CSIHnND[7:0]. Start the buffer transfer by setting CSIHnMCTL2.CSIHnBTST.
4. Transmission is started. Bits CSIHnMCTL2.CSIHnSOP[6:0] are automatically incremented and bits CSIHnMCTL2.CSIHnND[7:0] are decremented each time a piece of data is transmitted.
5. An interrupt request INTCSIHnIR is generated each time a piece of data is received.
   The INTCSIHnIC interrupt request is not generated because the last data of the current job (CSIHnTX0W.CSIHnEOJ = 1) was transmitted with CSIHnTX0W.CSIHnCIRE = 0.
6. CSIHnTX0W.CSIHnEOJ = 1 indicates that the last data of the current job is transmitted.
7. The INTCSIHnIC interrupt request is generated. INTCSIHnIC indicates that the last data of the current job (CSIHnTX0W.CSIHnEOJ = 1) was transmitted with CSIHnTX0W.CSIHnCIRE = 1.
8. By setting CSIHnCTL0.CSIHnJOBE = 1, communication is forced to stop at the end of JOB3.
9. After the forced stop of communication, interrupt requests, INTCSIHnIJC and INTCSIHnIR are generated at the end of JOB3.
   The INTCSIHnIJC interrupt request indicates a forced stop of communication at the end of the current job.
   The INTCSIHnIC interrupt request is not generated because the INTCSIHnIJC interrupt request is generated instead. Additionally, the transmission data available in register CSIHnTX0W is not transmitted.
10. Finally, clear CSIHnCTL0.CSIHnTXE and CSIHnCTL0.CSIHnRXE to prohibit the transmit/receive operation. When communication is not performed, set CSIHnCTL0.CSIHnPWR = 0 to minimize the power consumption of CSIHn.

14.6.3.3 Transmit/Receive in Slave Mode when Job Mode is Disabled

The procedure below is based on the assumption that:

- The transmission data length is 8-bits (CSIHnCFGx.CSIHnDLSx[3:0] = 1000_B).
- The transmission direction is MSB first (CSIHnCFGx.CSIHnDIRx = 0).
- Normal clock and data phase (CSIHnCTL1.CSIHnCKR = 0, CSIHnCFG0.CSIHnDAP0 = 0)
- No interrupt delay (CSIHnCTL1.CSIHnSIT = 0)
- Job mode is disabled (CSIHnCTL1.CSIHnJE = 0).
- Number of data: 9 (CSIHnMCTL2.CSIHnND[7:0] = 09_H).
- The transfer start address is 10_H (CSIHnMCTL2.CSIHnSOP[6:0] = 10_H).
- Normal INTCSIHnIC interrupt timing (CSIHnCTL1.CSIHnSLIT = 0)
- Dual buffer mode (CSIHnCTL0.CSIHnMBS = 0, CSIHnMCTL0.CSIHnMMS[1:0] = 01_B)
- The handshake function is enabled. (CSIHnCTL1.CSIHnHSE = 1)

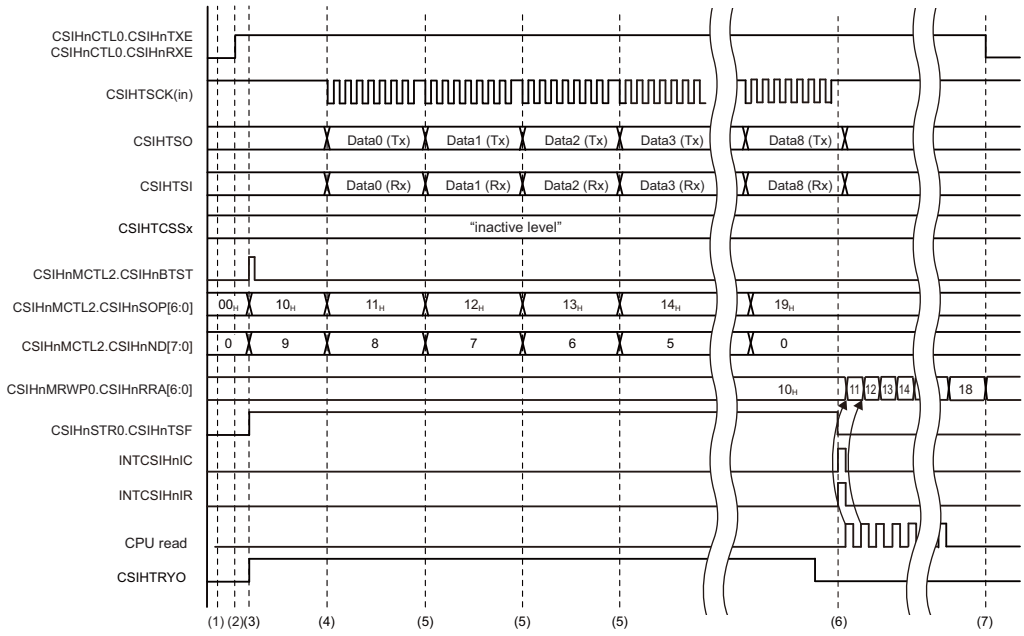

Figure 14.56 Slave in Dual Buffer Mode, CSIHnCTL1.CSIHnJE = 0

NOTE

In this section, the process of writing the data into the buffer is not described.

Procedure:

1. Configure the communication protocol in register CSIHnCFG0.
   Specify the transfer and operating modes by setting the corresponding bits in registers CSIHnCTL1 and CSIHnCTL2.
   Set the memory mode by CSIHnMCTL0.CSIHnMMS[1:0]
   Set CSIHnMCTL0.CSIHnMMS[1:0] to 01_B (dual buffer mode).
2. In the CSIHnCTL0 register, set bits CSIHnPWR = 1 (enables the clock), CSIHnTXE = 1 (permits transmission), and CSIHnRXE = 1 (permits reception). The CSIHnCTL0.CSIHnMBS bit must be cleared.
3. Specify the transfer start address by setting CSIHnMCTL2.CSIHnSOP[6:0] and the number of data by setting CSIHnMCTL2.CSIHnND[7:0].
   Permit buffer transfer by setting CSIHnMCTL2.CSIHnBTST.
4. Transmission is started when the input clock is received from the master. Bits CSIHnMCTL2.CSIHnSOP[6:0] are automatically incremented and bits CSIHnMCTL2.CSIHnND[7:0] are decremented each time a piece of data is transmitted.
5. This is repeated until the last data is transmitted/received.
   The interrupt requests, INTCSIHnIC and INTCSIHnIR are not generated because transmission data is sent from the buffer, and received data is stored in the buffer.
6. When the last data is transmitted and received, interrupt requests INTCSIHnIC and INTCSIHnIR are generated.
   The CPU starts to read the received data that is stored in the receive buffer. The start adress of the read access is specified in CSIHnMRWP0.CSIHnRRA[6:0]. These bits are incremented everytime a data is read.
7. Finally, clear CSIHnCTL0.CSIHnTXE and CSIHnCTL0.CSIHnRXE to prohibit the transmit/receive operation. When communication is not performed, set CSIHnCTL0.CSIHnPWR = 0 to minimize the power consumption of CSIHn.

14.6.4 Procedures in FIFO Mode

Two examples for a master is provided, one with job mode disabled, the other one with job mode enabled.

14.6.4.1 Transmit/Receive in Master Mode when Job Mode is Disabled

The procedure below is based on the assumption that:

- The transmission data length is 8-bits (CSIHnCFGx.CSIHnDLSx[3:0] = 1000_B).
- The transmission direction is MSB first (CSIHnCFGx.CSIHnDIRx = 0).
- Normal clock and data phase (CSIHnCFGx.CSIHnCKPx = 0, CSIHnCFGx.CSIHnDAPx = 0)
- No interrupt delay (CSIHnCTL1.CSIHnSIT = 0)
- Job mode is disabled (CSIHnCTL1.CSIHnJE = 0).
- Normal INTCSIHnIC interrupt timing (CSIHnCTL1.CSIHnSLIT = 0)
- FIFO mode (CSIHnCTL0.CSIHnMBS = 0, CSIHnMCTL0.CSIHnMMS[1:0] = 00_B)

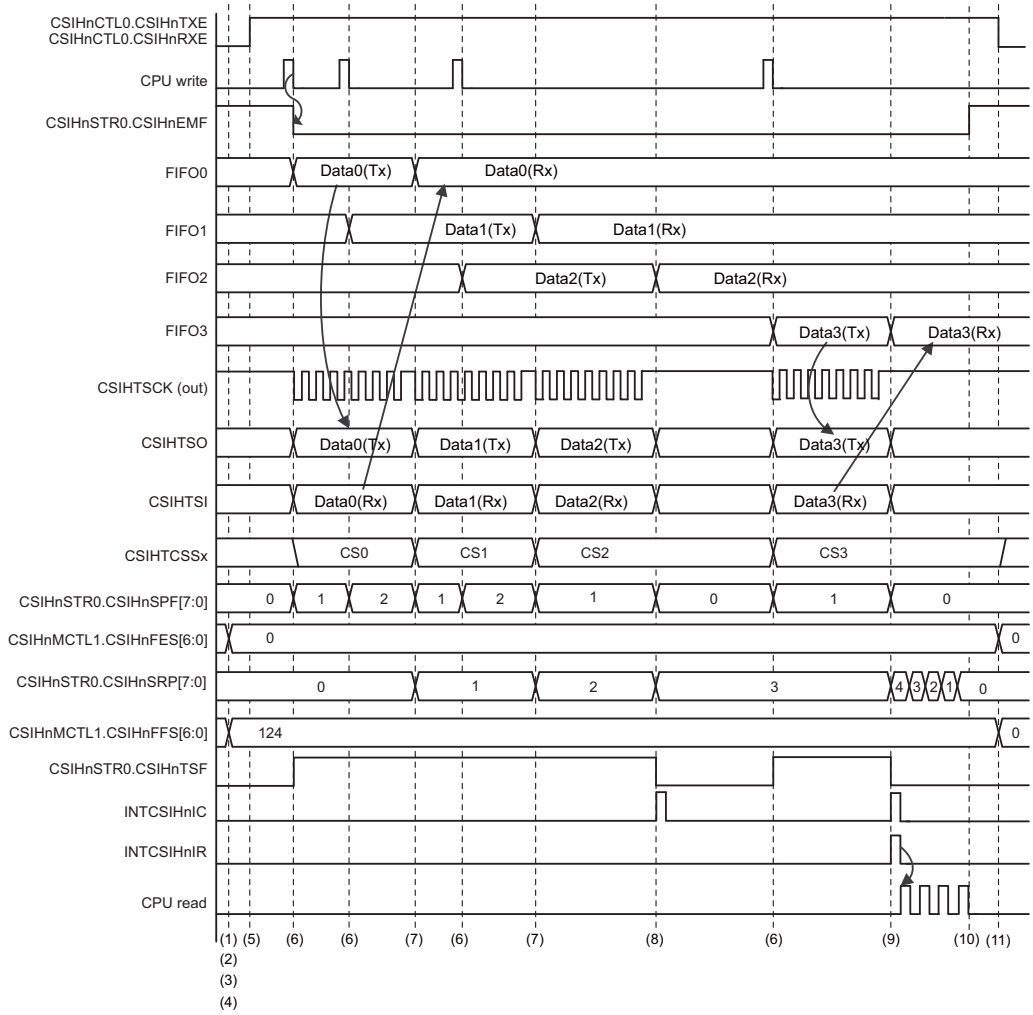

Figure 14.57 Master in FIFO Mode, CSIHnCTL1.CSIHnJE = 0

Procedure:

1. Configure the communications protocol in the CSIHnCFGx register, specify the job mode and master mode by setting the corresponding bits in registers CSIHnCTL1 and CSIHnCTL2, and select FIFO mode by setting CSIHnMCTL0.CSIHnMMS[1:0] to 00_B.These examples use chip select signals CSIHTCSS0 to CSIHTCSS3.
2. Set CSIHnSTCR0.CSIHnPCT to 1 to clear all buffer pointers.
3. Make sure that CSIHnSTR0.CSIHnFLF is set to 0, CSIHnSTR0.CSIHnEMF is set to 1, and CSIHnSTR0.CSIHnSPF[7:0] is set to 00_H respectively.
4. With CSIHnMCTL1.CSIHnFES[6:0], specify the conditions for the INTCSIHnIC interrupt output. With CSIHnFFS[6:0] in the same register, specify the conditions for the INTCSIHnIR interrupt output.
5. Set CSIHnCTL0.CSIHnPWR is set to 1 (enables the clock), CSIHnTXE is set to 1 (permits transmission), and CSIHnRXE is set to 1 (permits reception). The CSIHnCTL0.CSIHnMBS bit must be cleared.
6. Write the transmission data to the transmission register CSIHnTX0W. When the transmission data becomes available, transmission starts automatically.
   Make sure that CSIHnSTR0.CSIHnEMF is set to 0.
7. The current transmission is completed. The interrupt request, INTCSIHnIC is not generated because CSIHnFES[6:0] is not CSIHnSPF[7:0].
8. The interrupt request, INTCSIHnIC is generated because CSIHnFES[6:0] is CSIHnSPF[7:0].
9. When CSIHnFFS[6:0] becomes 128-CSIHnSRP[7:0], the interrupt request, INTCSIHnIR is generated. Since CSIHnFES[6:0] = CSIHnSPF[7:0], an interrupt request INTCSIHnIC is generated. After the interrupt is generated, the CPU starts reading the received data stored in the receive buffer.
10. When the CPU has read the received data stored in the receive buffer, CSIHnSTR0.CSIHnEMF is set to 1 and the FIFO buffer becomes empty.
11. Finally, clear CSIHnCTL0.CSIHnTXE and CSIHnCTL0.CSIHnRXE to prohibit the transmit/receive operation. When no communication is conducted, set CSIHnCTL0.CSIHnPWR to 0 to minimize the power consumption of the CSIHn.

14.6.4.2 Transmit/Receive in Mater Mode when Job Mode is Enabled

The procedure below is based on the assumption that:

- The transmission data length is 8-bits (CSIHnCFGx.CSIHnDLSx[3:0] = 1000_B).
- The transmission direction is MSB first (CSIHnCFGx.CSIHnDIRx = 0)
- Normal clock and data phase (CSIHnCFGx.CSIHnCKPx = 0, CSIHnCFGx.CSIHnDAPx = 0)
- No interrupt delay (CSIHnCTL1.CSIHnSIT = 0)
- Job mode is enabled (CSIHnCTL1.CSIHnJE = 1).
- JOB1 consists of four data, JOB2 consists of three data, and JOB3 consists of five data.
- Normal INTCSIHnIC interrupt timing (CSIHnCTL1.CSIHnSLIT = 0)
- FIFO mode (CSIHnCTL0.CSIHnMBS = 0, CSIHnMCTL0.CSIHnMMS[1:0] = 00_B)

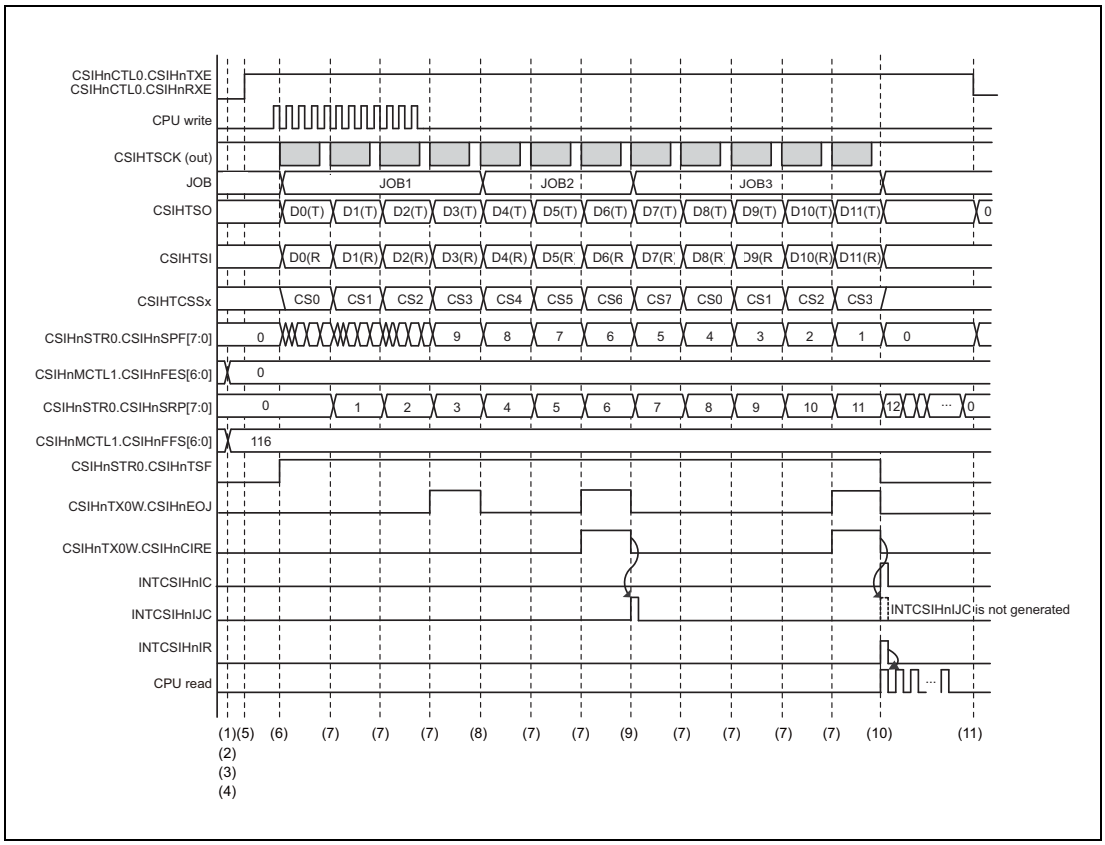

Figure 14.58 Master in FIFO Mode, CSIHnCTL1.CSIHnJE = 1

Procedure:

1. Set communication protocol in the CSIHnCFGx register, set job mode disable and master mode by corresponding bits in the CSIHnCTL1 and CSIHnCTL2 registers, and specify FIFO mode by setting CSIHnMCTL0.CSIHnMMS[1:0] = 00_B. These examples use chip select signals CS0 to CS7.
2. Set the CSIHnSTCR0.CSIHnPCT bit to 1 to clear all buffer pointers.
3. Make sure that CSIHnSTR0.CSIHnFLF is set to 0, CSIHnSTR0.CSIHnEMF is set to 1, and CSIHnSTR0.CSIHnSPF[7:0] is set to 00_H respectively.
4. With CSIHnMCTL1.CSIHnFES[6:0], specify the conditions for generating an interrupt request INTCSIHnIC. With CSIHnMCTL1.CSIHnFFS[6:0], specify the conditions for generating an interrupt request INTCSIHnIR.
5. Set bits CSIHnPWR = 1 (enables the clock), CSIHnTXE = 1 (permits transmission), and CSIHnRXE = 1 (permits reception) in the CSIHnCTL0 register. The CSIHnCTL0.CSIHnMBS bit must be cleared.
6. Write the transmission data to the transmission register CSIHnTX0W. When the transmission data becomes available, transmission starts automatically.
   Make sure that CSIHnSTR0.CSIHnEMF is set to 0.
7. The current transmission is completed. The interrupt request, INTCSIHnIC is not generated because CSIHnFES[6:0] is not CSIHnSPF[7:0]
8. An interrupt request INTCSIHnIJC is not generated because the last data of the current job (CSIHnTX0W.CSIHnEOJ = 1) was transmitted with CSIHnTX0W.CSIHnCIRE = 0.
9. An interrupt request INTCSIHnIJC is generated because the last data of the current job (CSIHnTX0W.CSIHnEOJ = 1) was transmitted with CSIHnTX0W.CSIHnCIRE = 1.
10. Since CSIHnSTR0.CSIHnSPF[7:0] = CSIHnMCTL1.CSIHnFES[6:0], an interrupt request INTCSIHnIC is generated. Interrupt request INTCSIHnIJC is not generated because interrupt request INTCSIHnIC is generated instead. When CSIHnMCTL0.CSIHnFFS[6:0] becomes 128-CSIHnSTR0.CSIHnSRP[7:0], an interrupt request, INTCSIHnIR is generated. After the INTCSIHnIR interrupt is generated, the CPU starts reading the received data stored in the receive buffer.
11. Finally, clear CSIHnCTL0.CSIHnTXE and CSIHnCTL0.CSIHnRXE to prohibit the transmit/receive operation. When no communication is conducted, set CSIHnCTL0.CSIHnPWR to 0 to minimize the power consumption of the CSIHn.

Section 15 Serial Communication Interface 3 (SCI3)

15.1 Overview

The serial communication interface 3 (SCI3: Serial Communication Interface 3) can handle two methods of serial communications: asynchronous and clock synchronous serial communications. Asynchronous serial data communications can be carried out with standard asynchronous communication LSIs such as Universal Asynchronous Receiver/Transmitter (UART) or Asynchronous Communication Interface Adapter (ACIA). Asynchronous mode is equipped with a serial communications function between multiple processors (multi-processor communications function).

15.1.1 Number of Units and Channels

This microcontroller has the following number of SCI3 units.

Each unit has one channel SCI3. “Number of channels” is used with the same meaning as “number of units” in this section.

Table 15.1 Number of Units

Product Name	RH850/P1x 100 pins	RH850/P1x 144 pins
Number of Units	3	3
Name	SCI3n (n = 0 to 2)	SCI3n (n = 0 to 2)

Table 15.2 SCI3 Unit Configurations and Channels

Unit Name SCI3n	Channels per Unit	RH850/P1x 100 pins (3ch)	RH850/P1x 144 pins (3ch)
SCI30	1	√	√
SCI31	1	√	√
SCI32	1	√	√

Note: The channel name is the same as the unit name.

Table 15.3 Index

Index	Meaning
n	Throughout this section, the individual SCI3 units are identified by the index “n” (n = 0 to 2): for example, SCI3nSMR is the serial mode register.

15.1.2 Register Base Addresses

SCI3 base addresses are listed in the following table.

SCI3 register addresses are given as offsets from these base addresses.

Table 15.4 Register Base Address

Base Address Name	Base Address
<SCI30_base>	FFDF 0000_H
<SCI31_base>	FFDF 1000_H
<SCI32_base>	FFDF 2000_H

15.1.3 Clock Supply

Clock supply by and to SCI3 is listed in the following table.

Table 15.5 Clock Supply

Unit Name	Clock Name for the Unit	Supply Clock Name
SCI3n	PCLK	High-speed peripheral clock CLK_HSB

15.1.4 Interrupt Request

SCI3 interrupt requests are listed in the following table.

Table 15.6 Interrupt Request

Unit Interrupt Signal	Outline	Interrupt Number	DMA/DTS Trigger Number
SCI30			
INTSCI30ERI	Receive error	106	—
INTSCI30RXI	Receive data full	107	87
INTSCI30TXI	Transmit data empty	108	88
INTSCI30TEI	End of transmission	109	—
SCI31			
INTSCI31ERI	Receive error	110	—
INTSCI31RXI	Receive data full	111	89
INTSCI31TXI	Transmit data empty	112	90
INTSCI31TEI	End of transmission	113	—
SCI32			
INTSCI32ERI	Receive error	218	—
INTSCI32RXI	Receive data full	219	91
INTSCI32TXI	Transmit data empty	220	92
INTSCI32TEI	End of transmission	221	—

15.1.5 Reset Sources

SCI3 reset sources are listed in the following table. SCI3 is initialized by the reset source shown below.

Table 15.7 Reset Source

Unit Name	Reset Source
SCI3n	Reset controller SYSRES

15.1.6 External Input/Output Signals

External input/output signals of SCI3 are listed below.

Table 15.8 External Input/Output Signals

Unit Signal Name	Outline	Alternative port pin signal
SCI30		
SCI0SCK	SCI30 serial clock input	SCI30SCI
	SCI30 serial clock output	SCI30SCO
SCI0RxD	SCI30 data input signal	SCI30RX
SCI0TxD	SCI30 data output signal	SCI30TX
SCI31		
SCI1SCK	SCI31 serial clock input	SCI31SCI
	SCI31 serial clock output	SCI31SCO
SCI1RxD	SCI31 data input signal	SCI31RX
SCI1TxD	SCI31 data output signal	SCI31TX
SCI32		
SCI2SCK	SCI32 serial clock input	SCI32SCI
	SCI32 serial clock output	SCI32SCO
SCI2RxD	SCI32 data input signal	SCI32RX
SCI2TxD	SCI32 data output signal	SCI32TX

15.1.7 Combination of Pins and Ports

Combinations of SCI3 pins and ports are listed in the following table.

Table 15.9 Combinations of Pins and Ports

Function	Pin Name	Port Name					
		Group 1	Group 2	Group 3	Group 4	Group 5	Group 6
SCI30	SCI30RX	P0_2	P2_5	P3_7	P4_5	P5_0	P5_0
	SCI30TX	P0_3*1	P2_6	P3_12	P4_6	P5_1	P5_1
	SCI30SCI / SCI30SCO	P0_4*1	P2_7	P3_13	P4_2	P5_2*1	P5_4
SCI31	SCI31RX	P2_8	P5_5	—	—	—	—
	SCI31TX	P2_9	P5_6	—	—	—	—
	SCI31SCI / SCI31SCO	P3_5	P5_7	—	—	—	—
SCI32	SCI32RX	P3_4	P5_8	—	—	—	—
	SCI32TX	P3_3	P5_9	—	—	—	—
	SCI32SCI / SCI32SCO	P3_9	P5_10	—	—	—	—

Note 1. Available in devices with 144-pin.

15.2 Outline of Functions

- The serial data communication mode can be configured for asynchronous communications or clock synchronous communications.
- Full-duplex communications are available. The independent transmitter unit and receiver unit allow simultaneous transmission and reception. Both the transmitter and the receiver have a double-buffered structure, enabling continuous data transmission and reception.
- An arbitrary bit rate is selectable with the on-chip baud rate generator. An external clock is also selectable as a transmission/reception clock source.
- LSB-first or MSB-first transfer is selectable (except for asynchronous 7-bit data.)
- Interrupt sources: 4 types consisting of transmit-end, transmit-data-empty, receive-data-full, and receive-error. Transmit-data-empty and receive-data-full interrupt sources can activate the DMAC.
- The bit rate modulation function can reduce errors averagely (even in a high bit rate) by correcting the output of the on-chip baud rate generator (except for the maximum speed in clock synchronous mode).
- The pin level of serial input data can be checked.
- On-chip 6-bit divider (PSC)

15.2.1 Serial Communication Modes

Asynchronous mode

- Data length: 7 bits or 8 bits selectable
- Stop bit length: 1 bit or 2 bits selectable
- Parity: Even parity, odd parity, or none selectable
- Receive error detection: Parity error, overrun error, and framing error
- Break detection: A break can be detected by reading a register in the case of a framing error.

Clock synchronous mode

- Data length: 8 bits
- Receive error detection: Overrun error

15.2.2 Block Diagram

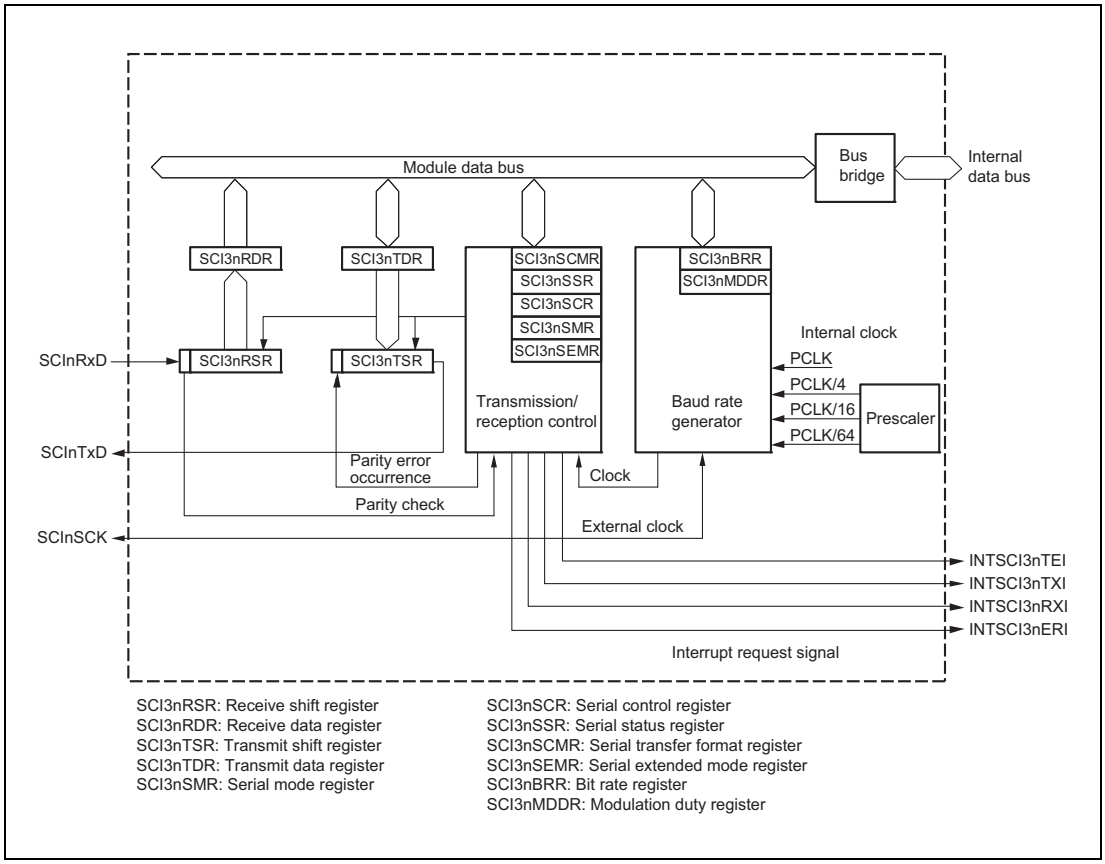

Figure 15.1 SCI3 Block Diagram

15.3 Register Descriptions

The SCI3 has the following registers. Some registers have limitations in read/write by the CPU.
For <SCI3n_base>, refer to **Section 15.1.2, Register Base Addresses**.

CAUTION

SCI3nBRR and SCI3nMDDR are allocated to the same address (relative address 4). The SCI3nMDDRS bit in SCI3nSEMR is used to switch these registers.

Table 15.10 Register Configuration

Register Name	Symbol*1	Value after Reset	Address	Access Size
Receive shift register	SCI3nRSR	—	—	—
Serial mode register	SCI3nSMR	00_H	<SCI3n_base> + 0000_H	8
Bit rate register / Modulation duty register	SCI3nBRR/ SCI3nMDDR	FF_H	<SCI3n_base> + 0004_H	8
Serial control register	SCI3nSCR	00_H	<SCI3n_base> + 0008_H	8
Transmit data register	SCI3nTDR	FF_H	<SCI3n_base> + $000C_H$	8
Transmit shift register	SCI3nTSR	—	—	—
Serial status register	SCI3nSSR	84_H	<SCI3n_base> + 0010_H	8
Receive data register	SCI3nRDR	00_H	<SCI3n_base> + 0014_H	8
Serial transfer format register	SCI3nSCMR	$F2_H$	<SCI3n_base> + 0018_H	8
Serial extended mode register	SCI3nSEMR	04_H	<SCI3n_base> + $001C_H$	8

Note 1. n = 0 to 2

Relative addresses 4n + 1, 4n + 2, and 4n + 3 (n = 0 to 2) are reserved areas. These areas are always read as 0. Writing is invalid.

15.3.1 SCI3nRSR — Receive Shift Register

SCI3nRSR is a shift register which is used to receive serial data input from the SCInRxD pin and convert it to parallel data. When one frame of data has been received, it is automatically transferred to SCI3nRDR. SCI3nRSR cannot be directly accessed by the CPU.

15.3.2 SCI3nRDR — Receive Data Register

SCI3nRDR is an 8-bit register to store receive data. The value of SCI3nRDR after a reset is 00_H. When one frame of data has been received, it is transferred from SCI3nRSR to this register allowing SCI3nRSR to receive the next data. SCI3nRSR and SCI3nRDR function as a double-buffer, allowing continuous receive operations. Be sure to check that the RDRF flag in SCI3nSSR is set to 1 before reading SCI3nRDR. SCI3nRDR cannot be written from the CPU.

When the data length is 7 bits, receive data is stored in bits 0 to 6 and bit 7 is fixed to 0 regardless of the SINV bit in SCI3nSCMR.

15.3.3 SCI3nTDR — Transmit Data Register

SCI3nTDR is an 8-bit register to store transmit data. The value of SCI3nTDR after a reset is FF_H. When SCI3nTSR empty is detected, the transmit data written to SCI3nTDR is transferred to SCI3nTSR and transmission starts. The double-buffered structure of SCI3nTDR and SCI3nTSR allows continuous serial transmission. If the next transmit data has been written to SCI3nTDR when one frame of data is sent, the transmit data is transferred to SCI3nTSR to continue transmission. SCI3nTDR can always be read and written by the CPU. Be sure to check that the TDRE flag in SCI3nSSR is set to 1 before writing transmit data to SCI3nTDR.

15.3.4 SCI3nTSR — Transmit Shift Register

SCI3nTSR is a shift register to transmit serial data. To perform serial data transmission, transmit data written to SCI3nTDR is automatically transferred SCI3nTSR, and is then sent to the SCInTxD pin. SCI3nTSR cannot be directly accessed by the CPU.

15.3.5 SCI3nSMR — Serial Mode Register

SCI3nSMR is a register used to select the communication format and the clock source for the on-chip baud rate generator.

Access: This register can be read/written in 8-bit units.

Address: <SCI3n_base> + 0000_H

Value after reset: 00_H

Bit	7	6	5	4	3	2	1	0
	CM	CHR	PE	PM	STOP	MP	CKS1	CKS0
Value after reset	0	0	0	0	0	0	0	0
R/W	R/W*1	R/W*1	R/W*1	R/W*1	R/W*1	R/W*1	R/W*1	R/W*1

Note 1. Writable only when TE = RE = 0.

Table 15.11 SCI3nSMR Register Contents

Bit Position	Bit Name	Function
7	CM	Communications Mode 0: Asynchronous mode 1: Clock synchronous mode
6	CHR	Character Length (Valid only in asynchronous mode) 0: Selects 8 bits as the data length. 1: Selects 7 bits as the data length. LSB-first is fixed and the MSB (bit 7) in SCI3nTDR is not transmitted in transmission. In clock synchronous mode, a data length of 8 bits is always used.
5	PE	Parity Enable (Valid only in asynchronous mode) When this bit is set to 1, a parity bit is added to transmit data and the parity bit is checked in reception. Regardless of the setting of this bit, no parity bit is added or checked in the multi-processor format.
4	PM	Parity Mode (Valid only when PE = 1 in asynchronous mode) 0: Selects even parity. 1: Selects odd parity. When even parity is set, parity bit is added so that the total number of 1-bits in the transmit/receive character plus the parity bit is even. Similarly, when odd parity is set, parity bit is added so that the total number of 1-bits in the transmit/receive character plus the parity bit is odd.
3	STOP	Stop Bit Length (Valid only in asynchronous mode) 0: 1 stop bit for transmission 1: 2 stop bits for transmission In reception, only the first stop bit is checked regardless of the setting of this bit. If the second stop bit is 0, it is treated as the start bit of the next transmission frame.
2	MP	Multi-Processor Mode (Valid only in asynchronous mode) When this bit is set to 1, the multi-processor communication function is enabled. In multi-processor mode, settings of the PE and PM bits are invalid.
1, 0	CKS[1:0]	Clock Select 1, 0 These bits select the clock source for the on-chip baud rate generator. 00: PCLK clock (α = 0) 01: PCLK/4 clock (α = 1) 10: PCLK/16 clock (α = 2) 11: PCLK/64 clock (α = 3) For the relation between the setting of these bits and the baud rate, see **Section 15.3.10, SCI3nBRR — Bit Rate Register**. The character α is the decimal notation of the value of α in **Section 15.3.10, SCI3nBRR — Bit Rate Register**.

15.3.6 SCI3nSCR — Serial Control Register

SCI3nSCR is a register used for the transmission/reception control, interrupt control, and transmission/reception clock source selection listed below. For interrupt requests, see **Section 15.8, Interrupt Sources**.

Access: This register can be read/written in 8-bit units.

Address: <SCI3n_base> + 0008_H

Value after reset: 00_H

Bit	7	6	5	4	3	2	1	0
	TIE	RIE	TE	RE	MPIE	TEIE	CKE1	CKE0
Value after reset	0	0	0	0	0	0	0	0
R/W	R/W	R/W	R/W*1	R/W*1	R/W	R/W	R/W*2	R/W*2

Note 1. While the CM bit in SCI3nSMR is 1, a value of 1 can be written only when TE = 0 and RE = 0. After the TE or RE bit is set to 1, only 0 can be written to TE and RE. While the CM bit in SCI3nSMR is 0, writing is enabled at any timing.

Note 2. Writable only when TE = 0 and RE = 0. Also, writable at the same time when TE = 0 and RE = 0 are written.

Table 15.12 SCI3nSCR Register Contents (1/2)

Bit Position	Bit Name	Function
7	TIE	Transmit Interrupt Enable When this bit is set to 1, INTSCI3nTXI interrupt request is enabled. INTSCI3nTXI interrupt request can be cancelled by reading 1 from the TDRE flag and then clearing the flag to 0, or clearing the TIE bit.
6	RIE	Receive Interrupt Enable When this bit is set to 1, INTSCI3nRXI and INTSCI3nERI interrupt requests are enabled. INTSCI3nRXI and INTSCI3nERI interrupt requests can be cancelled by reading 1 from the RDRF, FER, PER, or ORER flag and then clearing the flag to 0, or clearing the RIE bit.
5	TE	Transmit Enable When this bit is set to 1, transmission is enabled. In this state, serial transmission is started by writing transmit data to SCI3nTDR and clearing the TDRE flag in SCI3nSSR to 0. Be sure to set SCI3nSMR before setting the TE bit to 1 to determine the transmission format. When this bit is set to 0 to disable transmission, the TDRE flag in SCI3nSSR is fixed to 1.
4	RE	Receive Enable When this bit is set to 1, reception is enabled. In this state, serial reception is started by detecting a start bit in asynchronous mode or the input of synchronous clock in clock synchronous mode. Be sure to set SCI3nSMR before setting the RE bit to 1 to determine the reception format. Even if reception is disabled by clearing this bit, the RDRF, FER, PER, or ORER flags are not affected and the previous value is retained.
3	MPIE	Multiprocessor Interrupt Enable (Valid only when MP in SCI3nSMR = 1 in asynchronous mode) When this bit is set to 1 and the data with the multi-processor bit set to 0 is received, the data is not read and setting the RDRF, FER, and ORER flags in SCI3nSSR to 1 is disabled. When the data with the multi-processor bit set to 1 is received, this bit is automatically cleared to 0, and normal reception is resumed. For details, see **Section 15.5, Multi-Processor Communication Function**. When the receive data includes MPB = 0 in SCI3nSSR, the receive data is not transferred from SCI3nRSR to SCI3nRDR, a receive error is not detected, and setting the RDRF, FER, and ORER flags in SCI3nSSR to 1 is disabled. When the receive data includes MPB = 1 in SCI3nSSR, the MPB bit in SCI3nSSR is set to 1, the MPIE bit is automatically cleared to 0, the INTSCI3nRXI and INTSCI3nERI interrupt requests are enabled (if the RIE bit in SCI3nSCR is set to 1), and setting the FER and ORER flags to 1 is enabled.

Table 15.12 SCI3nSCR Register Contents (2/2)

Bit Position	Bit Name	Function
2	TEIE	Transmit End Interrupt Enable When this bit is set to 1, INTSCI3nTEI interrupt request is enabled. INTSCI3nTEI interrupt request can be cancelled by reading 1 from the TDRE flag and then clearing the flag to 0 to clear the TEND flag to 0, or clearing the TEIE bit.
1, 0	CKE[1:0]	Clock Enable 1, 0 These bits select the clock source and the SCInSCK pin function. For asynchronous mode 00: On-chip baud rate generator (The SCInSCK pin functions as an input/output port.) 01: On-chip baud rate generator (The clock with the same frequency as the bit rate is output from the SCInSCK pin.) 1X: Setting prohibited For clock synchronous mode 0X: Internal clock (The SCInSCK pin functions as a clock output pin.) 1X: External clock (The SCInSCK pin functions as a clock input pin.)

Note: X: Don’t care

15.3.7 SCI3nSSR — Serial Status Register

SCI3nSSR consists of SCI3 status flags and transfer multi-processor bits.
The TDRE, RDRF, ORER, PER, and FER flags can be cleared only.

Access: This register can be read/written in 8-bit units.

Address: <SCI3n_base> + 0010_H

Value after reset: 84_H

Bit	7	6	5	4	3	2	1	0
	TDRE	RDRF	ORER	FER	PER	TEND	MPB	MPBT
Value after reset	1	0	0	0	0	1	0	0
R/W	R/(W)*1	R/(W)*1	R/(W)*1	R/(W)*1	R/(W)*1	R	R	R/W

Note 1. Only 0 can be written to clear the flag.

Table 15.13 SCI3nSSR Register Contents (1/2)

Bit Position	Bit Name	Function
7	TDRE	Transmit Data Register Empty Indicates whether or not transmit data exists in SCI3nTDR. [Setting conditions] • When the TE bit in SCI3nSCR is 0 • When the data in SCI3nTDR has been transferred to SCI3nTSR so that new data can be written to SCI3nTDR [Clearing condition] • Writing 0 to TDRE after reading TDRE = 1 • When transmit data is written to SCI3nTDR while TE = 1
6	RDRF	Receive Data Register Full Indicates whether or not receive data exists in SCI3nRDR [Setting condition] • When reception finishes successfully and the receive data is transferred from SCI3nRSR to SCI3nRDR [Clearing conditions] • Writing 0 to RDRF after reading RDRF = 1 • When data is read from SCI3nRDR Even when the RE bit in SCI3nSCR is cleared, the RDRF flag is not affected and the previous value is retained. • Note that completing the reception of the next data with the RDRF flag set to 1 will cause an overrun error, resulting in the loss of the receive data.
5	ORER	Overrun Error Indicates that an overrun error has occurred during reception and the reception abended. [Setting condition] • When the next data is received while RDRF = 1 In SCI3nRDR, receive data prior to an overrun error is retained, but data received after the overrun error occurrence is lost. When the ORER flag is set to 1, subsequent serial reception cannot be continued. In clock synchronous mode, serial transmission also cannot be continued. [Clearing condition] • Writing 0 to ORER after reading ORER = 1 Even when the RE bit in SCI3nSCR is cleared, the ORER flag is not affected and the previous value is retained.

Table 15.13 SCI3nSSR Register Contents (2/2)

Bit Position	Bit Name	Function
4	FER	Framing Error Indicates that a framing error has occurred during reception in asynchronous mode and the reception abended. [Setting condition] • When the stop bit is 0 In 2-stop-bit mode, only whether the first stop bit is 1 is checked but the second stop bit is not checked. Although the receive data when a framing error has occurred is transferred to SCI3nRDR, the RDRF flag is not set. In addition, while the FER flag is set to 1, the subsequent receive data is not transferred to SCI3nRDR. [Clearing condition] • Writing 0 to FER after reading FER = 1 Even when the RE bit in SCI3nSCR is cleared to 0, the FER flag is not affected and the previous value is retained.
3	PER	Parity Error Indicates that a parity error has occurred during reception in asynchronous mode and the reception abended. [Setting condition] • Although the receive data when a parity error has occurred is transferred to SCI3nRDR, the RDRF flag is not set. In addition, while the PER flag is set to 1, the subsequent receive data is not transferred to SCI3nRDR. [Clearing condition] • Writing 0 to PER after reading PER = 1 Even when the RE bit in SCI3nSCR is cleared to 0, the PER flag is not affected and the previous value is retained.
2	TEND	Transmit End Show transmission was completed. [Setting conditions] • When the TE bit in SCI3nSCR is 0 • When the TDRE flag is 1 while the last bit of a transmit character is being transmitted [Clearing condition] • Writing 0 to the TDRE flag after reading TDRE = 1 • When transmit data is written to SCI3nTDR while TE = 1
1	MPB	Multi-processor Bit Holds the value of the multi-processor bit in the received frame.
0	MPBT	Multi-processor Bit Transfer Sets the value of the multi-processor bit to be added to the transmit frame.

15.3.8 SCI3nSCMR — Serial Transfer Format Register

SCI3nSCMR is a register to select the communication format for both asynchronous mode and clock synchronous mode.

Access: This register can be read/written in 8-bit units.

Address: <SCI3n_base> + 0018_H

Value after reset: $F2_H$

Bit	7	6	5	4	3	2	1	0
	—	—	—	—	SDIR	SINV	—	—
Value after reset	1	1	1	1	0	0	1	0
R/W	R	R	R	R	R/W*1	R/W*1	R	R

Note 1. Writable only when TE = 0 and RE = 0.

Table 15.14 SCI3nSCMR Register Contents

Bit Position	Bit Name	Function
7 to 4	Reserved	When read, the value after reset is read. When writing, write the value after reset.
3	SDIR	Serial Data Transfer Direction (Valid in asynchronous mode and clock synchronous mode) This bit is used to select the direction of serial/parallel conversion. 0: Transfer with LSB-first 1: Transfer with MSB-first This bit is valid only when the transfer format is 8-bit data. For 7-bit data, LSB-first transfer is used.
2	SINV	Serial Data Invert (Valid in asynchronous mode and clock synchronous mode) This bit is used to invert the transmission/reception data logic level. The SINV bit does not affect the logic level of start bit, stop bit, parity bit and multi processor bit. To invert the parity bit, invert the PM bit in SCI3nSMR. 0: SCI3nTDR data is transmitted as it is, and receive data is stored in SCI3nRDR as it is. 1: SCI3nTDR data is inverted and transmitted, and receive data is inverted and stored in SCI3nRDR.
1	Reserved	When read, the value after reset is read. When writing, write the value after reset.
0	Reserved	When read, the value after reset is read. When writing, write the value after reset.

15.3.9 SCI3nSEMR — Serial Extended Mode Register

SCI3nSEMR is a register to select a 1-bit period.

Access: This register can be read/written in 8-bit units.

Address: <SCI3n_base> + $001C_H$

Value after reset: 04_H

Bit	7	6	5	4	3	2	1	0
	BRME	MDDRS	—	—	ABCS	RXDMON	—	—
Value after reset	0	0	0	0	0	1	0	0
R/W	R/W*1	R/W*1	R	R	R/W*1	R	R	R

Note 1. Writable only when TE = 0 and RE = 0.

Table 15.15 SCI3nSEMR Register Contents

Bit Position	Bit Name	Function
7	BRME	Bit Rate Modulation Enable When this bit is set to 1, the bit rate modulation function is enabled.
6	MDDRS	Modulation Duty Register Select This bit is used to select an accessible register. 0: SCI3nBRR is accessible. 1: SCI3nMDDR is accessible.
5, 4	Reserved	When read, the value after reset is read. When writing, write the value after reset.
3	ABCS	Asynchronous Reference Clock Select (Valid only in asynchronous mode) This bit is used to select the reference clock for 1-bit period. 0: Operates on the reference clock with a frequency of 16 times the transfer rate. 1: Operates on the reference clock with a frequency of 8 times the transfer rate (double-speed operation).
2	RXDMON	Serial Input Data Monitor This bit indicates the SCInRxD pin state. 0: SCInRxD pin state is the low level. 1: SCInRxD pin state is the high level.
1, 0	Reserved	When read, the value after reset is read. When writing, write the value after reset.

15.3.10 SCI3nBRR — Bit Rate Register

SCI3nBRR is an 8-bit register to adjust the bit rate. Since each SCI3 channel has an independent baud rate generator, different bit rates can be set for each channel. **Table 15.17** shows the relationship between the setting (N) in SCI3nBRR and the bit rate (B) in normal asynchronous mode and clock synchronous mode. The value of SCI3nBRR after reset is FF_H. SCI3nBRR is allocated at the same address as SCI3nMDDR and is selected when MDDRS in SCI3nSEMR is 0. This register is writable only when TE = 0 and RE = 0.

Access: This register can be read/written in 8-bit units.

Address: <SCI3n_base> + 0004_H

Value after reset: FF_H

Bit	7	6	5	4	3	2	1	0
	BRR							
Value after reset	1	1	1	1	1	1	1	1
R/W	R/W	R/W	R/W	R/W	R/W	R/W	R/W	R/W

Table 15.16 SCI3nBRR Register Contents

Bit Position	Bit Name	Function
7 to 0	BRR	Baud rate generator setting (0 ≤ N ≤ 255)

Table 15.17 Relationship between Setting N in SCI3nBRR and Bit Rate B

Mode	ABCS Setting	Bit Rate	Mean Error
Asynchronous	0	$B = \frac{PCLK \times 10^6}{64 \times 2^{2\alpha-1} \times (N+1)}$	$Error(\%) = \left\{\frac{PCLK \times 10^6}{B \times 64 \times 2^{2\alpha-1} \times (N+1)} - 1\right\} \times 100$
	1	$B = \frac{PCLK \times 10^6}{32 \times 2^{2\alpha-1} \times (N+1)}$	$Error(\%) = \left\{\frac{PCLK \times 10^6}{B \times 32 \times 2^{2\alpha-1} \times (N+1)} - 1\right\} \times 100$
Clock synchronous	—	$B = \frac{PCLK \times 10^6}{8 \times 2^{2\alpha-1} \times (N+1)}$	

Note: B: Bit rate (bps)
N: SCI3nBRR setting value for baud rate generator (0 ≤ N ≤ 255)
PCLK: Operating frequency (MHz)
α: Determined by the SCI3nSMR setting value shown in the following table.

SCI3nSMR Setting Value		
CKS1	CKS0	α
0	0	0
0	1	1
1	0	2
1	1	3

Table 15.18 list sample N settings of the SCI3nBRR register in asynchronous mode. **Table 15.19** lists the maximum settable bit rates.

Table 15.18 Examples of BRR Settings for Bit Rates (Asynchronous Mode) (80 MHz)

PCLK (MHz)	α	N	Baud Rate	
			SCI3nSEMR.ABCS = 0	SCI3nSEMR.ABCS = 1
80	0	0	2.500 MHz	5.000 MHz
80	0	1	1.250 MHz	2.500 MHz
80	0	2	0.833 MHz	1.667 MHz
80	0	3	0.625 MHz	1.250 MHz
80	0	4	0.500 MHz	1.000 MHz
80	0	5	0.417 MHz	0.833 MHz
80	0	6	0.357 MHz	0.714 MHz
80	0	7	0.313 MHz	0.625 MHz
			:	
80	1	0	0.625 MHz	1.250 MHz
80	1	1	0.313 MHz	0.625 MHz
80	1	2	0.208 MHz	0.417 MHz
80	1	3	0.156 MHz	0.313 MHz
80	1	4	0.125 MHz	0.250 MHz
80	1	5	0.104 MHz	0.208 MHz
80	1	6	0.089 MHz	0.179 MHz
80	1	7	0.078 MHz	0.156 MHz
			:	
80	3	242	160.751 Hz	321.502 Hz
80	3	243	160.092 Hz	320.184 Hz
80	3	244	159.439 Hz	318.878 Hz
80	3	245	158.791 Hz	317.581 Hz
80	3	246	158.148 Hz	316.296 Hz
80	3	247	157.510 Hz	315.020 Hz
80	3	248	156.878 Hz	313.755 Hz
80	3	249	156.250 Hz	312.500 Hz
80	3	250	155.627 Hz	311.255 Hz
80	3	251	155.010 Hz	310.020 Hz
80	3	252	154.397 Hz	308.794 Hz
80	3	253	153.789 Hz	307.579 Hz
80	3	254	153.186 Hz	306.373 Hz
80	3	255	152.588 Hz	305.176 Hz

Table 15.19 Maximum Bit Rate (Asynchronous Mode)

PCLK (MHz)	Setting			Maximum Serial Clock Frequency
	ABCS Setting	α	N	
80	1	0	0	5 MHz

Table 15.20 lists sample N settings of the SCI3nBRR register in clock synchronous mode.
Table 15.21 shows the maximum bit rate.

Table 15.20 Examples of Bit Rate Settings for Clock Synchronous Mode (Master Mode)

α	N	Baud Rate PCLK = 80 MHz
0	0	Setting prohibited
0	1	Setting prohibited
0	2	Setting prohibited
0	3	5.000 MHz
0	4	4.000 MHz
0	5	3.333 MHz
0	6	2.857 MHz
0	7	2.500 MHz
	:	
1	0	5.000 MHz
1	1	2.500 MHz
1	2	1.667 MHz
1	3	1.250 MHz
1	4	1.000 MHz
1	5	0.833 MHz
1	6	0.714 MHz
1	7	0.625 MHz
	:	
3	242	1286.008 Hz
3	243	1280.738 Hz
3	244	1275.510 Hz
3	245	1270.325 Hz
3	246	1265.182 Hz
3	247	1260.081 Hz
3	248	1255.020 Hz
3	249	1250.000 Hz
3	250	1245.020 Hz
3	251	1240.079 Hz
3	252	1235.178 Hz
3	253	1230.315 Hz
3	254	1225.490 Hz
3	255	1220.703 Hz

Table 15.21 Maximum Bit Rate (Clock Synchronous Mode) (Master Mode)

PCLK (MHz)	α	N	Maximum Serial Clock Frequency
80	0	3	5 MHz

15.3.11 SCI3nMDDR — Modulation Duty Register

SCI3nMDDR is a register to correct the bit rate adjusted by SCI3nBRR. The value of SCI3nMDDR after a reset is FF_H. When the BRME bit in SCI3nSEMR is set to 1, the bit rate generated by the on-chip baud rate generator is corrected to SCI3nMDDR/256 on average. **Table 15.23** shows the relationship between the SCI3nMDDR setting and the bit rate B. SCI3nMDDR is allocated at the same address as SCI3nBRR and is selected when MDDRS in SCI3nSEMR is 1. This register is writable only when TE = 0 and RE = 0. Bit 7 is fixed to 1.

Access: This register can be read/written in 8-bit units.

Address: <SCI3n_base> + 0004_H

Value after reset: FF_H

Bit	7	6	5	4	3	2	1	0
	MDDR							
Value after reset	1	1	1	1	1	1	1	1
R/W	R/W	R/W	R/W	R/W	R/W	R/W	R/W	R/W

Table 15.22 SCI3nMDDR Register Contents

Bit Position	Bit Name	Function
7 to 0	MDDR	Baud rate generator setting value (128 ≤ MDDR ≤ 255)

Table 15.23 Relationship between SCI3nMDDR Setting Value and Bit Rate B when Bit Rate Modulation Function Is Used

Mode	ABCS Setting	Bit Rate	Mean Error
Asynchronous	0	$B = \frac{PCLK \times 10^6}{64 \times 2^{2\alpha-1} \times (256/MDDR) \times (N+1)}$	$Error(\%) = \left\{\frac{PCLK \times 10^6}{B \times 64 \times 2^{2\alpha-1} \times (256/MDDR) \times (N+1)} - 1\right\} \times 100$
	1	$B = \frac{PCLK \times 10^6}{32 \times 2^{2\alpha-1} \times (256/MDDR) \times (N+1)}$	$Error(\%) = \left\{\frac{PCLK \times 10^6}{B \times 32 \times 2^{2\alpha-1} \times (256/MDDR) \times (N+1)} - 1\right\} \times 100$
Clock synchronous	—	$B = \frac{PCLK \times 10^6}{8 \times 2^{2\alpha-1} \times (256/MDDR) \times (N+1)}$	

Note: B: Bit rate (bps)
N: SCI3nBRR setting value of baud rate generator (0 ≤ N ≤ 255)
PCLK: Operating frequency (MHz)
α: See **Table 15.17, Relationship between Setting N in SCI3nBRR and Bit Rate B**.
SCI3nMDDR: SCI3nMDDR setting (128 ≤ SCI3nMDDR ≤ 255)

15.4 Operation in Asynchronous Mode

Figure 15.2 shows the general format for asynchronous serial communications. One frame consists of a start bit (low level), transmit/receive data, a parity bit, and stop bits (high level). In asynchronous serial communications, the communication line is usually held in the mark state (high level). The SCI3 monitors the communication line, and when the SCI3 detects the space state (low level), it recognizes a start bit and starts serial communications. Inside the SCI3, the transmitter and the receiver are independent, enabling full-duplex communications. Both the transmitter and the receiver have a double-buffered structure so that data can be read or written during transmission or reception, enabling continuous data transmission and reception.

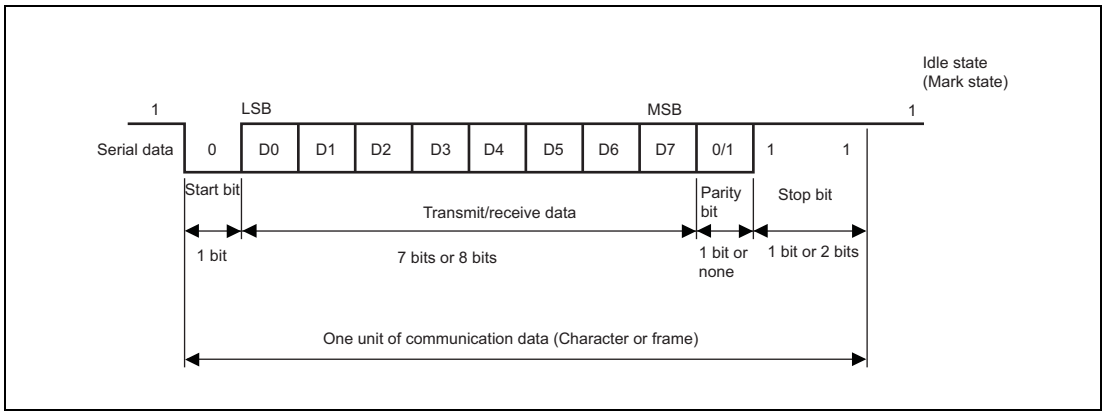

Figure 15.2 Data Format in Asynchronous Serial Communications (Example with 8-Bit Data, Parity, Two Stop Bits)

15.4.1 Transmission/Reception Format

Table 15.24 lists settable transmission/reception formats in asynchronous mode. Any of 12 transmission/reception formats can be selected according to the SCI3nSMR setting. For details of the multi-processor bit, see **Section 15.5, Multi-Processor Communication Function**.

Table 15.24 Serial Transmission/Reception Formats (Asynchronous Mode)

SMR Setting				Serial Transmission/Reception Format and Frame Length											
CHR	PE	MP	STOP	1	2	3	4	5	6	7	8	9	10	11	12
0	0	0	0	S	8-bit data								STOP		
0	0	0	1	S	8-bit data								STOP	STOP	
0	1	0	0	S	8-bit data								P	STOP	
0	1	0	1	S	8-bit data								P	STOP	STOP
1	0	0	0	S	7-bit data							STOP			
1	0	0	1	S	7-bit data							STOP	STOP		
1	1	0	0	S	7-bit data							P	STOP		
1	1	0	1	S	7-bit data							P	STOP	STOP	
0	—	1	0	S	8-bit data								MPB	STOP	
0	—	1	1	S	8-bit data								MPB	STOP	STOP
1	—	1	0	S	7-bit data							MPB	STOP		
1	—	1	1	S	7-bit data							MPB	STOP	STOP	

Note: S: Start bit
STOP: Stop bit
P: Parity bit
MPB: Multi-processor bit

15.4.2 Receive Data Sampling Timing and Reception Margin

In asynchronous mode, the SCI3 operates on a reference clock with a frequency of 16 times (8 times for the double-speed mode) the bit rate. In reception, the SCI3 samples the falling edge of the beginning of the start bit (low level) using the reference clock and performs internal synchronization. As shown in **Figure 15.3**, data is latched at the middle of each bit by sampling receive data at the rising edge of the eighth pulse (fourth pulse for the double-speed mode) of the reference clock.

Thus the reception margin in asynchronous mode is determined by formula (1) below.

$$M = \left| \left(0.5 - \frac{1}{2N}\right) - (L - 0.5)F - \frac{|D - 0.5|}{N}(1 + F) \right| \times 100[\%] \text{...formula(1)}$$

M: Reception margin
N: Ratio of bit rate to clock (N = 16 when ABCS in SCI3nSEMR = 0, N = 8 when ABCS = 1)
D: Duty cycle of clock (D = 0.5 to 1.0)
L: Frame length (L = 9 to 12)
F: Absolute value of clock frequency deviation

Assuming that F (absolute value of clock frequency deviation) = 0, D (duty cycle of clock) = 0.5, and N = 16 in formula (1), the reception margin is obtained by the formula below.

$$M = \left\{ 0.5 - \frac{1}{(2 \times 16)} \right\} \times 100[\%] = 46.875\%$$

However, this is only the calculated value, and a margin of 20% to 30% should be allowed in system design.

When the bit rate modulation function is used, the reference clock frequency is corrected on average.

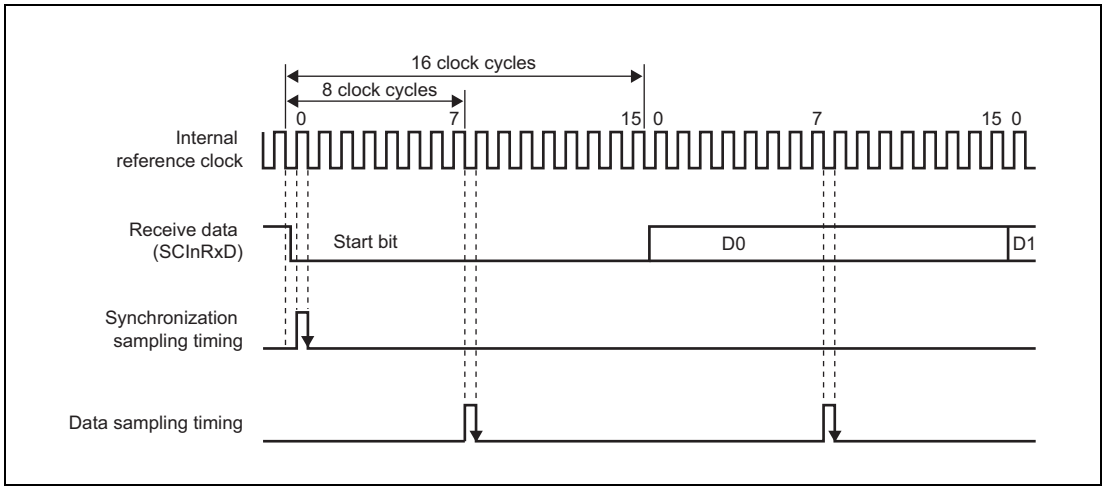

Figure 15.3 Receive Data Sampling Timing in Asynchronous Mode

15.4.3 Clock

An internal clock generated by the on-chip baud rate generator can be selected as the SCI3's transmission/reception clock according to the settings of the CM bit in SCI3nSMR and the CKE1 and CKE0 bits in SCI3nSCR. When the SCI3 is operated on an internal clock, the clock can be output from the SCInSCK pin.

For details of clock synchronous mode, see **Section 15.6, Operation in Clock Synchronous Mode**.

In asynchronous mode, the frequency of the clock output is equal to the bit rate and the phase is such that the rising edge of the clock comes at the center of the transmit data, as shown in **Figure 15.4**.

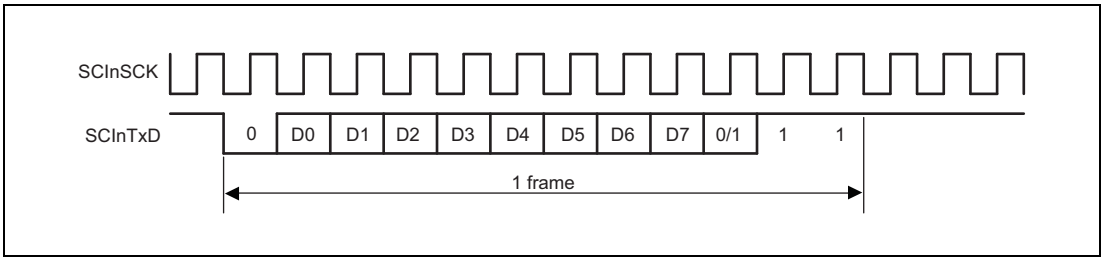

Figure 15.4 Phase Relationship between Output Clock and Transmit Data (Asynchronous Mode)

15.4.4 Double-Speed Operation

In addition to the operation described in **Section 15.4.3, Clock**, double-speed operation is enabled by the setting of the ABCS bit in SCI3nSEMR.

In double-speed operation, the same operation on a clock with a frequency of 16 times the bit rate in normal operation can be conducted on a clock with a frequency of 8 times the bit rate, meaning that the SCI3 operates on a double transfer rate using the same reference clock.

15.4.5 SCI3 Initialization (Asynchronous Mode)

Before transmitting and receiving data, clear the TE and RE bits in SCI3nSCR and then initialize the SCI3 according to the sample flowchart in **Figure 15.5**. Before changing the operating mode or transfer format, be sure to clear the TE and RE bits to 0. Note that clearing the TE bit to 0 sets the TDRE flag to 1, but clearing the RE bit to 0 initializes neither the RDRF, PER, FER, and ORER flags nor SCI3nRDR.

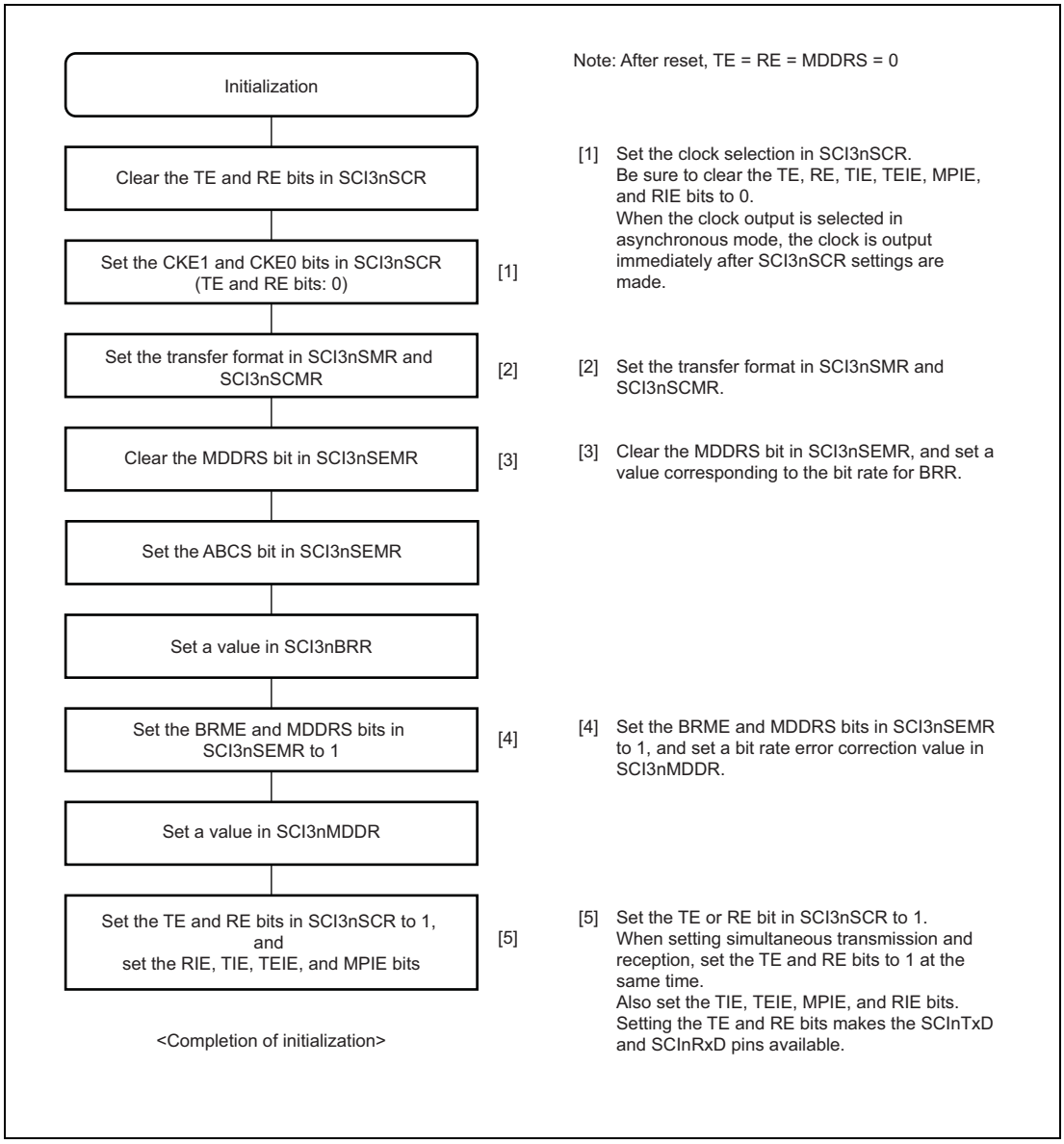

Figure 15.5 Sample Flowchart for SCI3 Initialization

15.4.6 Serial Data Transmission (Asynchronous Mode)

Figure 15.6 shows an example of operation for data transmission in asynchronous mode. In data transmission, the SCI3 operates as described below.

1. When transmit data is written to SCI3nTDR, the TDRE flag is automatically cleared to 0. The SCI3 monitors the TDRE flag in SCI3nSSR. When the flag is cleared, the SCI3 recognizes that data has been written to SCI3nTDR and transfers data from SCI3nTDR to SCI3nTSR. When writing transmit data to SCI3nTDR at a trigger of INTSCI3nTXI interrupt request, set the TIE bit to 1 and then set the TE bit to 1 or set both TIE and TE bits simultaneously with one instruction to generate a INTSCI3nTXI interrupt request for starting data transfer.
2. Transmission starts after data is transferred from SCI3nTDR to SCI3nTSR and the TDRE flag is set to 1. If the TIE bit in SCI3nSCR is set to 1 at this time, a INTSCI3nTXI interrupt request is generated. Continuous transmission is enabled by writing the next transmit data to SCI3nTDR in this INTSCI3nTXI interrupt processing routine before transmission of the previously transferred data is completed. When using a INTSCI3nTEI interrupt request, write the last transmit data to SCI3nTDR and then clear the TIE bit to 0 and set the TEIE bit to 1.
3. Data is sent from the SCInTxD pin in the following order: start bit, transmit data, parity bit or multi-processor bit (may be omitted depending on the format), and stop bit.
4. The TDRE flag is checked when the stop bit is output.
5. When the TDRE flag is 0, the next transmit data is transferred from SCI3nTDR to SCI3nTSR. After the stop bit has been sent, transmission of the next frame starts.
6. When the TDRE flag is 1, the TEND flag in SCI3nSSR is set to 1, the stop bit is sent, and then 1 is output to enter the mark state. If the TEIE bit in SCI3nSCR is set to 1 at this time, a INTSCI3nTEI interrupt request is generated.

Figure 15.7 shows a sample flowchart for data transmission. **Figure 15.8** shows a sample flowchart for stopping the SCI3 after data transmission.

Note about the operation when transmission is enabled in asynchronous mode:

When the setting of the TE bit is changed from 0 to 1, a high level (preamble) is output for one frame. If transmit data is written to SCI3nTDR while the preamble is being output, that data will be transferred from SCI3nTDR to SCI3nTSR after preamble output is complete.

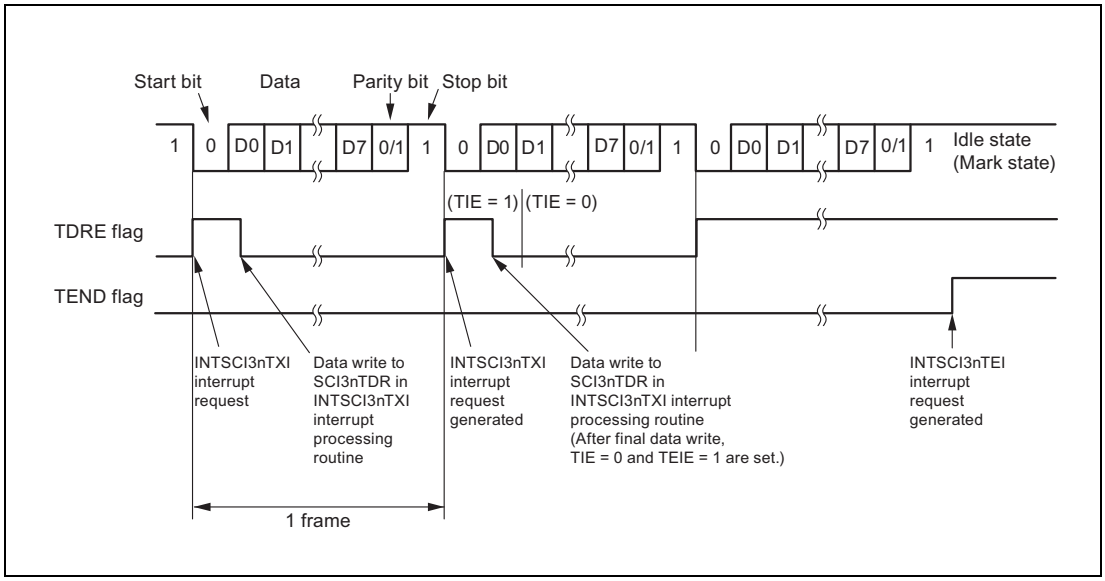

Figure 15.6 Example of Operation for Transmission in Asynchronous Mode (Example with 8-Bit Data, Parity, One Stop Bit)

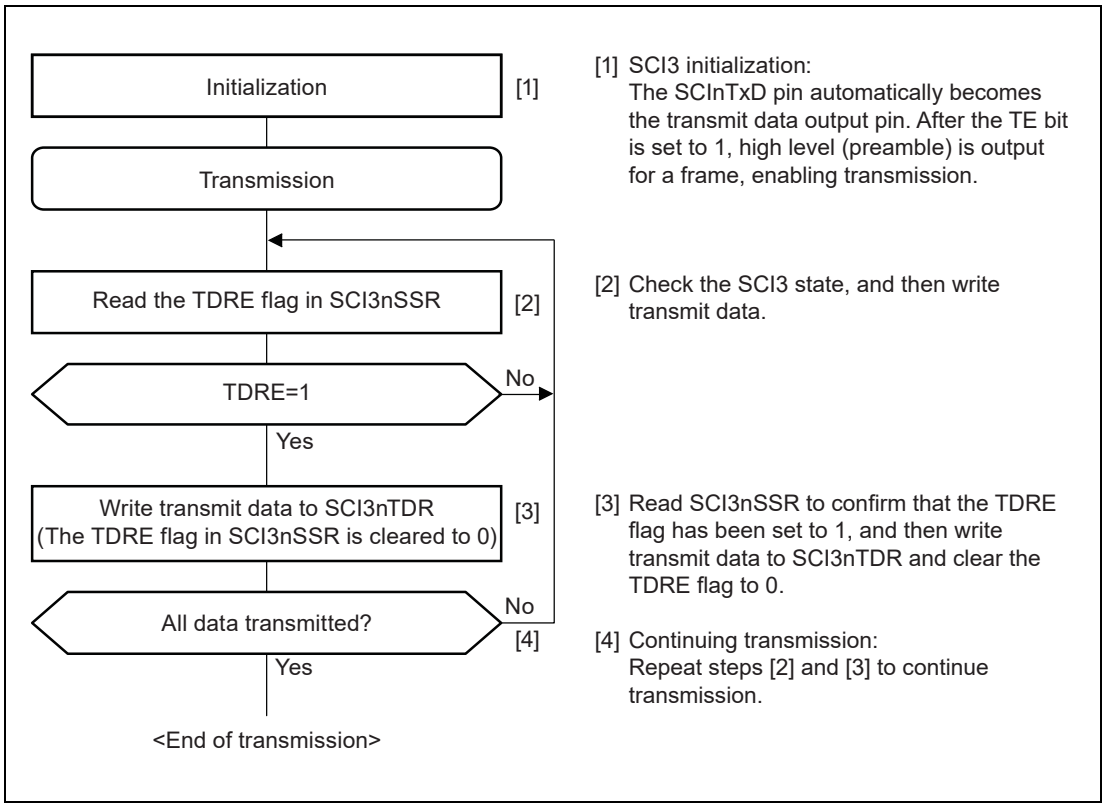

Figure 15.7 Example of Serial Transmission Flowchart

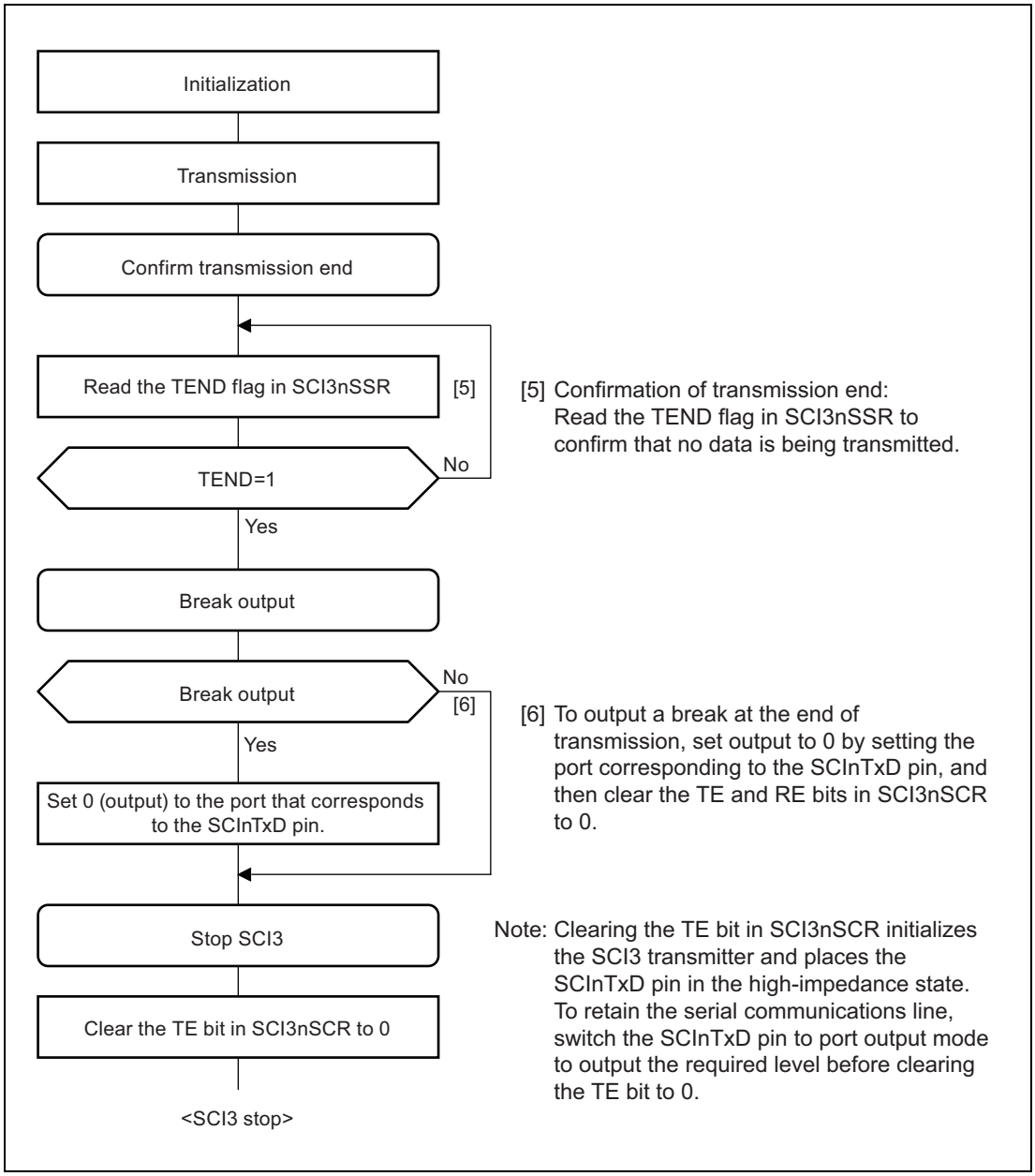

Figure 15.8 Example Flowchart for Stopping the SCI3 after Serial Transmission

15.4.7 Serial Data Reception (Asynchronous Mode)

Figure 15.9 shows an example of the operation for data reception in asynchronous mode. In data reception, the SCI3 operates as described below.

1. When the SCI3 monitors the communications line and detects a start bit, it performs internal synchronization, stores receive data in SCI3nRSR, and checks the parity bit and the stop bit.
2. When an overrun error occurs (the next data has been received with the RDRF flag in SCI3nSSR set to 1), the ORER flag in SCI3nSSR is set to 1. If the RIE bit in SCI3nSCR is set to 1 at this time, an INTSCI3nERI interrupt request is generated. Receive data is not transferred to SCI3nRDR. The RDRF flag retains the state of being set to 1.
3. When a parity error is detected, the PER flag in SCI3nSSR is set to 1 and receive data is transferred to SCI3nRDR. If the RIE bit in SCI3nSCR is set to 1 at this time, an INTSCI3nERI interrupt request is generated.
4. When a framing error (when the stop bit is 0) is detected, the FER flag in SCI3nSSR is set to 1 and receive data is transferred to SCI3nRDR. If the RIE bit in SCI3nSCR is set to 1 at this time, an INTSCI3nERI interrupt request is generated.
5. When reception finishes successfully, the RDRF flag in SCI3nSSR is set to 1 and receive data is transferred to SCI3nRDR. If the RIE bit in SCI3nSCR is set to 1 at this time, an INTSCI3nRXI interrupt request is generated. Continuous reception is enabled by reading the receive data transferred to SCI3nRDR in this INTSCI3nRXI interrupt processing routine before reception of the next receive data is completed. Reading SCI3nRDR automatically clears the RDRF flag to 0.

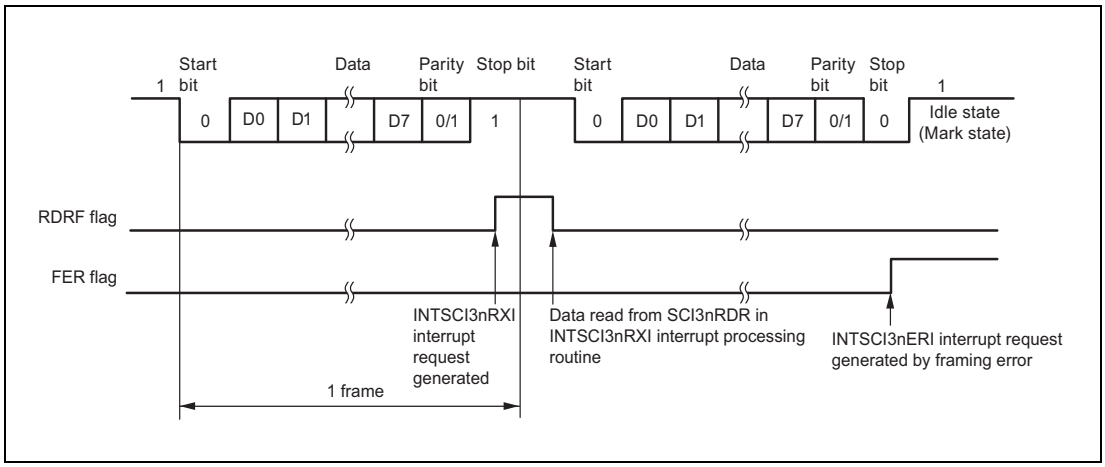

Figure 15.9 Example of Operation for Reception in Asynchronous Mode (Example with 8-Bit Data, Parity, One Stop Bit)

Table 15.25 lists the states of the SCI3nSSR status flags and receive data handling when a receive error is detected. When a receive error is detected, the RDRF flag retains the status before receiving the data. Subsequent data reception is disabled while a receive error flag is set to 1. Accordingly, clear the ORER, FER, PER, and RDRF flags before continuing data reception. **Figure 15.10** shows a sample flowchart for data reception.

Table 15.25 SCI3nSSR Status Flags and Receive Data Handling

SCI3nSSR Status Flags					
RDRF*1	ORER	FER	PER	Receive Data	Receive Status
1	0	0	0	Transferred to SCI3nRDR	Successful reception
0	0	1	0	Transferred to SCI3nRDR	Framing error
0	0	0	1	Transferred to SCI3nRDR	Parity error
0	0	1	1	Transferred to SCI3nRDR	Framing error + parity error
1*	1	0	0	Lost	Overrun error
1*	1	1	0	Lost	Overrun error + framing error
1*	1	0	1	Lost	Overrun error + parity error
1*	1	1	1	Lost	Overrun error + framing error + parity error

Note 1. In the case of an overrun error, the RDRF flag retains the state before the data reception.

Note: A sign "+" indicates that two or more receive states occur simultaneously in a single reception operation.

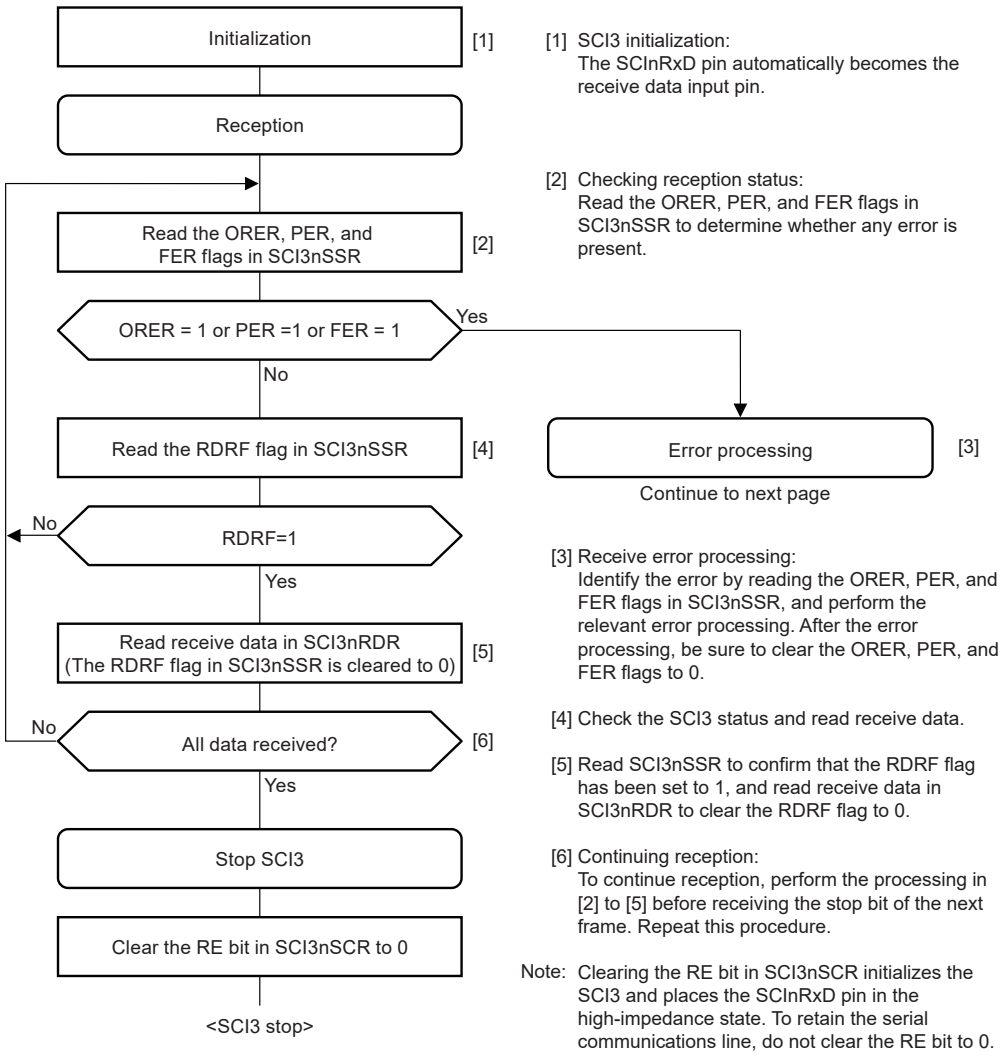

Figure 15.10 Example of Serial Reception Flowchart (1)

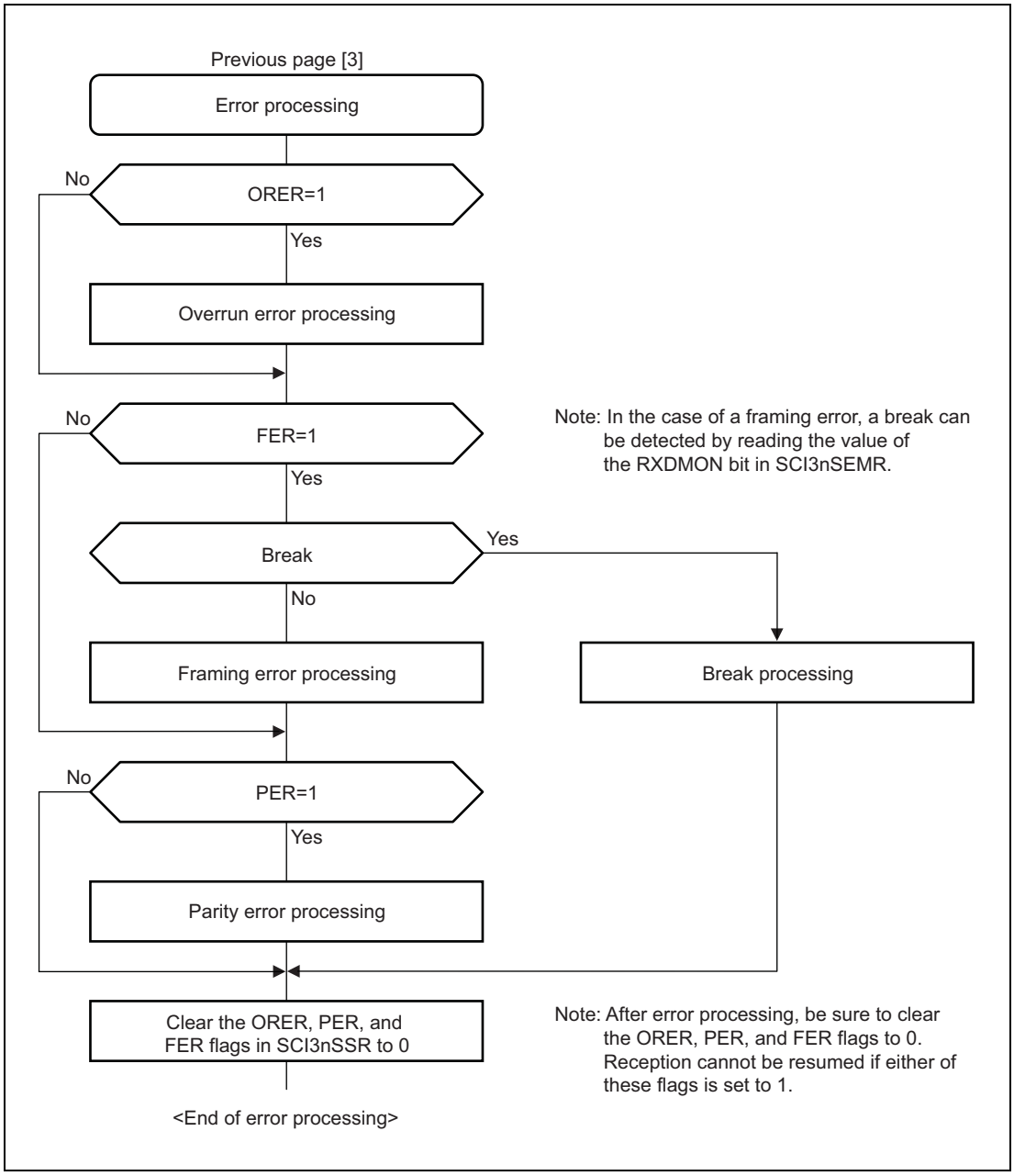

Figure 15.11 Example of Serial Reception Flowchart (2)

15.5 Multi-Processor Communication Function

15.5.1 Overview and Sample Connection

Using the multi-processor communication function allows data transmission and reception by sharing a communication line between multiple processors by using asynchronous serial communication in which the multi-processor bit is added. In multi-processor communication, a unique ID code is allocated to each receiving station. Serial communication cycles consist of an ID transmission cycle to specify the receiving station and a data transmission cycle to transmit data to the specified receiving station. The multi-processor bit is used to distinguish the ID transmission cycle from the data transmission cycle. When the multi-processor bit is set to 1, it indicates the ID transmission cycle. When the multi-processor bit is set to 0, it indicates the data transmission cycle. **Figure 15.12** shows an example of communication between processors by using the multi-processor format. First, a transmitting station sends communication data in which the multi-processor bit (= 1) is added to the ID code of the receiving station. Next, the transmitting station sends communication data in which the multi-processor bit (= 0) is added to the transmit data. Upon receiving the communication data in which the multi-processor bit is set to 1, the receiving station compares the received ID with the ID of the receiving station itself. When these IDs match, the receiving station receives communication data that is subsequently transmitted. If these IDs do not match, the receiving station skips communication data until it receives communication data in which the multi-processor bit is set to 1.

To support this function, the SCI3 provides the MPIE bit in SCI3nSCR. When the MPIE bit is set to 1, transfer of receive data from SCI3nRSR to SCI3nRDR, detection of a receive error, and setting the RDRF, FER, and ORER flags in SCI3nSSR are disabled until data in which the multi-processor bit is set to 1 is received. Upon receiving a character in which the multi-processor bit is set to 1, the MPB bit in SCI3nSSR is set to 1 and the MPIE bit is automatically cleared to 0, thus returning to a normal reception operation. When the RIE bit in SCI3nSCR is set to 1 at this time, an INTSCI3nRXI interrupt request is generated. While the MPIE bit is cleared to 0, reception operation is conducted regardless of the multi-processor bit value. The multi-processor bit is stored in the MPB bit in SCI3nSSR.

When the multi-processor format is specified, specification of the parity bit is disabled. Apart from this, there is no difference from the operation in the normal asynchronous mode. A clock that is used for multi-processor communications is also the same as the clock used in the normal asynchronous mode.

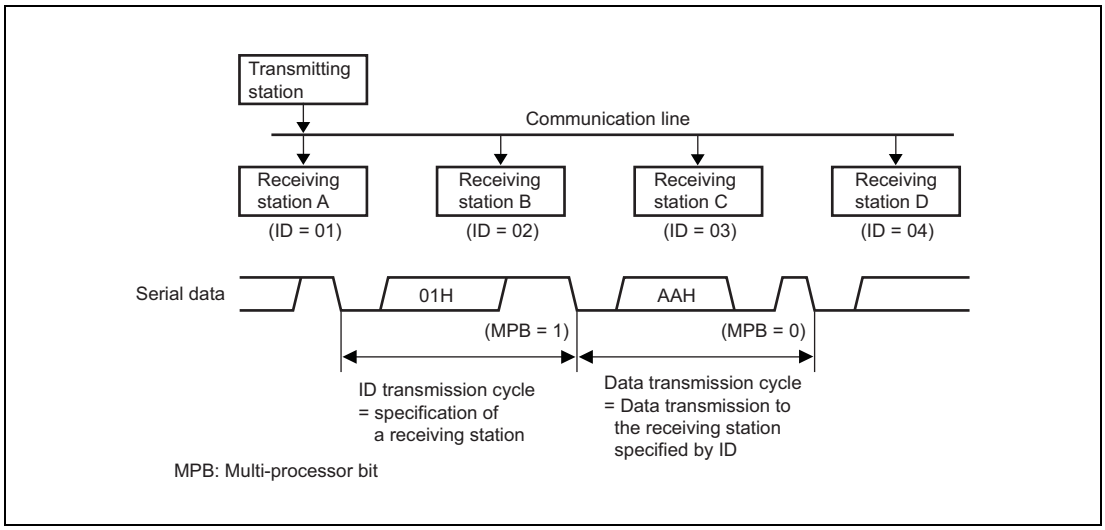

Figure 15.12 Example of Communication Using the Multi-Processor Format (Example of Transmission of Data AA_H to Receiving Station A)

15.5.2 Multi-Processor Serial Data Transmission

Figure 15.13 shows a sample flowchart of multi-processor data processing. In the ID transmission cycle, send the ID with the MPBT bit in SCI3nSSR set to 1. In the data transmission cycle, send data with the MPBT bit in SCI3nSSR cleared to 0. Other operations are the same as operations in asynchronous mode.

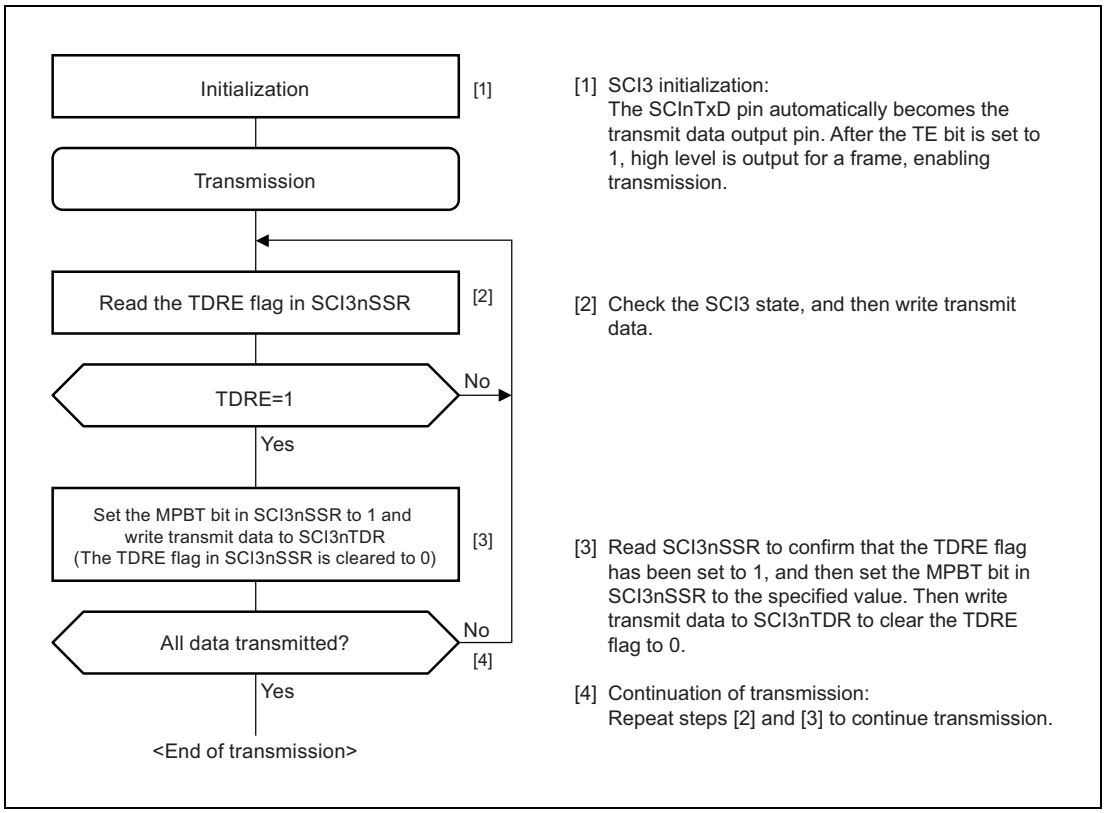

Figure 15.13 Example of Multi-Processor Serial Transmission Flowchart

15.5.3 Multi-Processor Serial Data Reception

Figure 15.15 shows sample flowcharts of multi-processor data reception. When the MPIE bit in SCI3nSCR is set to 1, reading the communication data is skipped until communication data in which the multi-processor bit is set to 1 is received. When communication data in which the multi-processor bit is set to 1 is received, the receive data is transferred to SCI3nRDR. At this time, an INTSCI3nRXI interrupt request is generated. Other operations are the same as operations in asynchronous mode. **Figure 15.14** shows an example of operation for reception.

CAUTION

Do not write data to SCI3nSCR when communication data in which the multi-processor bit is set to 1 is received. The MPIE bit may not become the desired state.

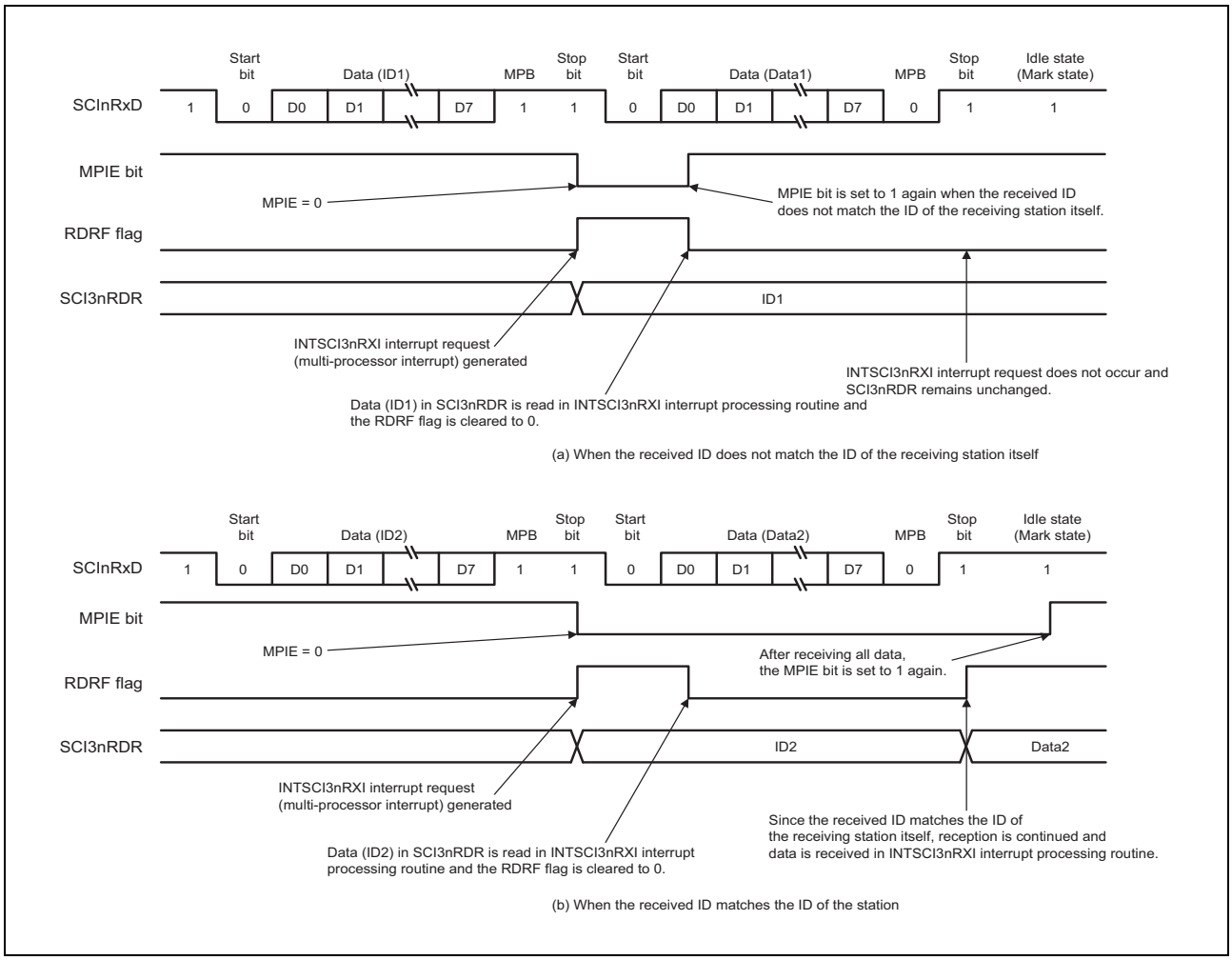

Figure 15.14 Example of SCI3 Reception (8-Bit Data, Multi-Processor Bit, One Stop Bit)

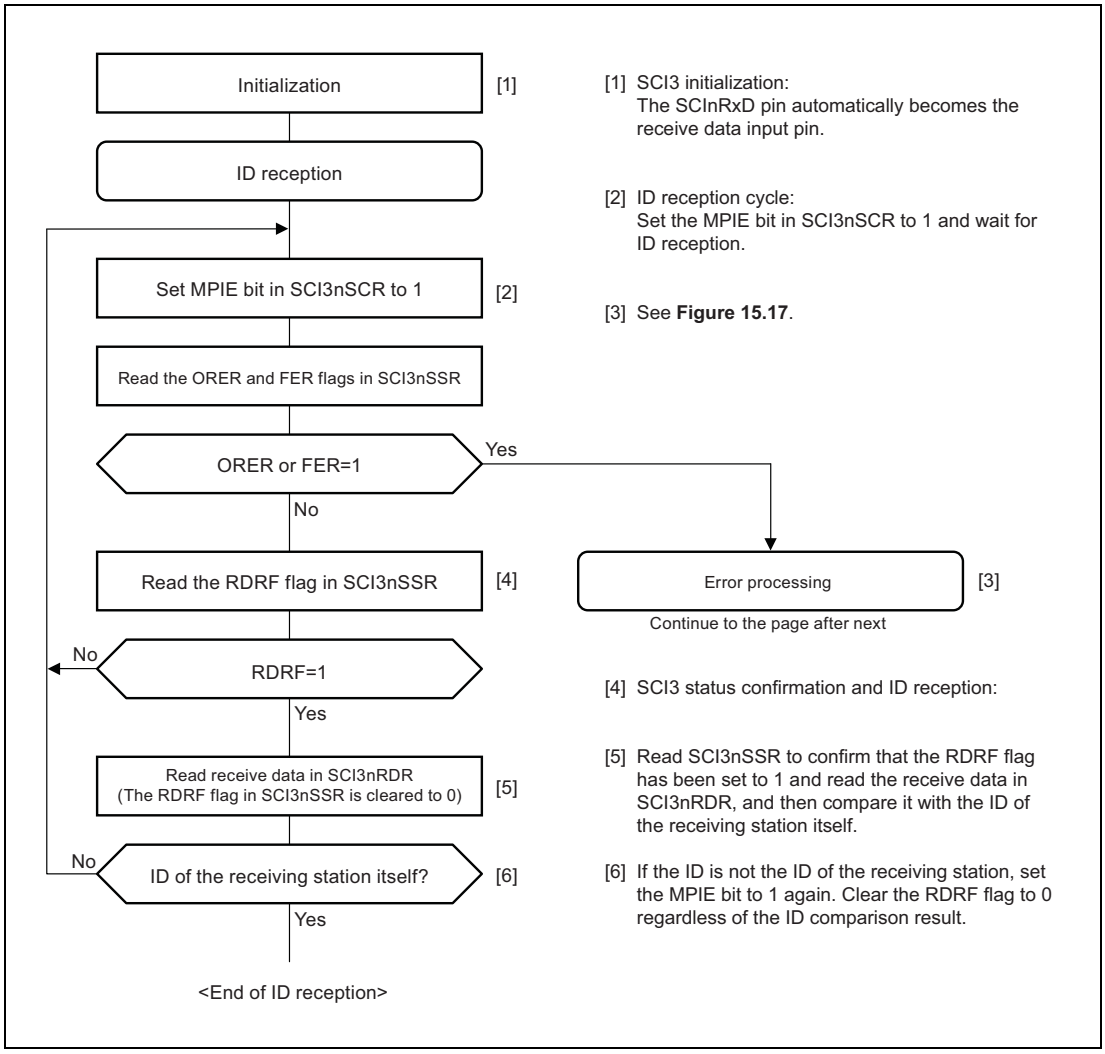

Figure 15.15 Example of Multi-Processor Serial Reception Flowchart (1)

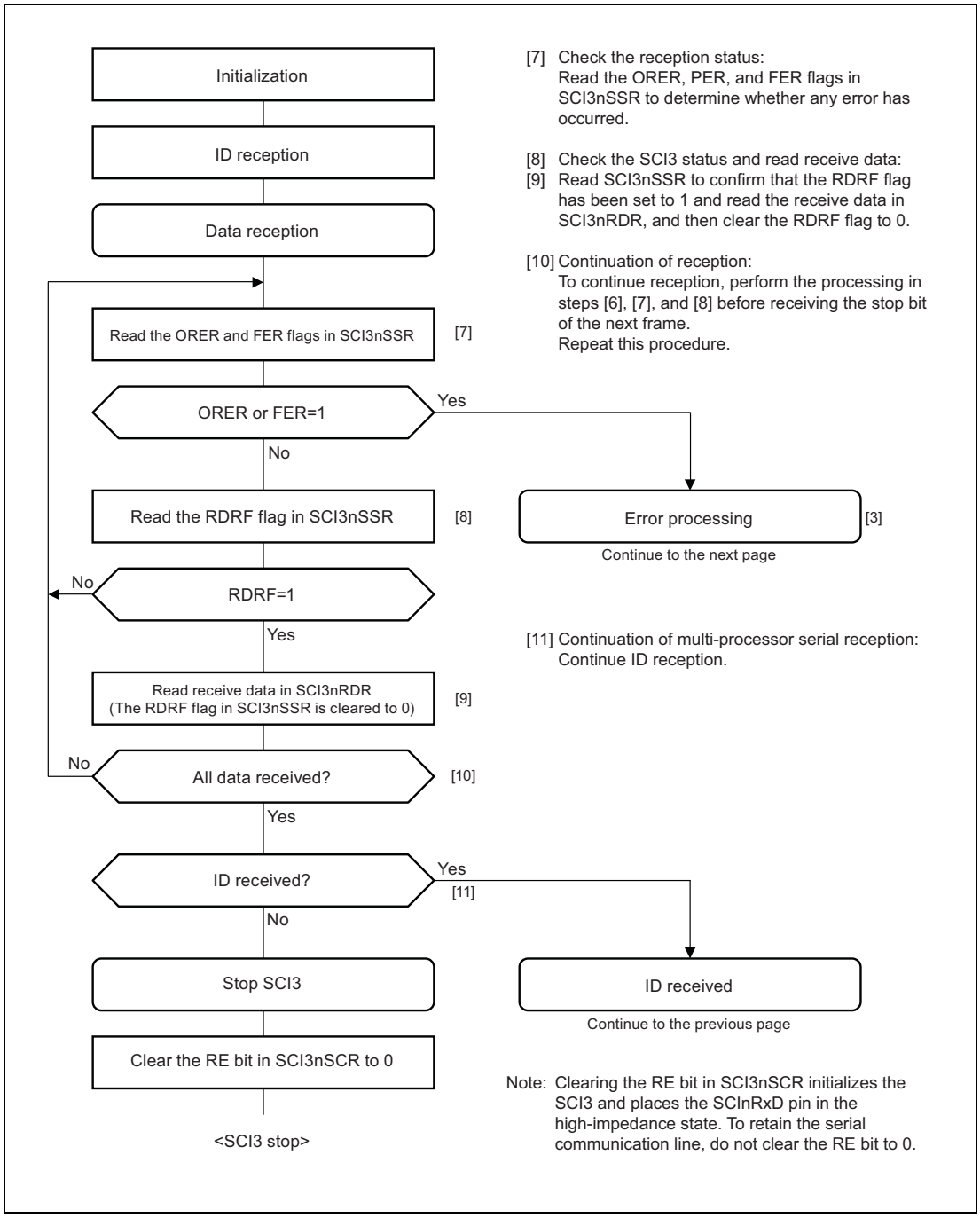

Figure 15.16 Example of Multi-Processor Serial Reception Flowchart (2)

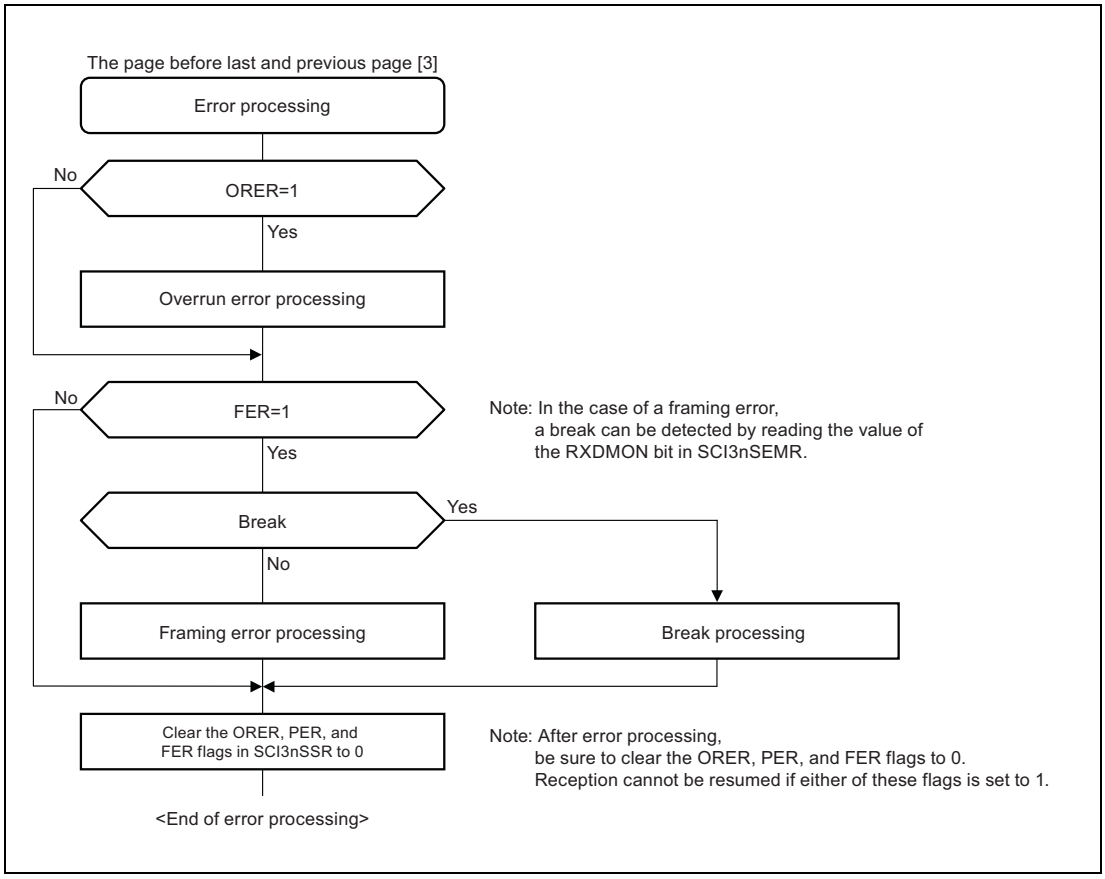

Figure 15.17 Example of Multi-Processor Serial Reception Flowchart (3)

15.6 Operation in Clock Synchronous Mode

Figure 15.18 shows the data format for clock synchronous serial data communication. In clock synchronous mode, data is transmitted or received in synchronization with clock pulses. One character in transfer data consists of 8-bit data. In data transmission with the synchronization clock output, the SCI3 outputs data from one falling edge to the next falling edge of the synchronization clock. In data transmission with the synchronization clock input, the SCI3 outputs the first data (bit 0) after starting transfer immediately after clearing the TDRE bit in SCI3nSSR to 0, and then outputs the next bit data after 2 to 3 PCLK clock cycles from the rising edge of the synchronization clock. In data reception, the SCI3 receives data in synchronization with the rising edge of the synchronization clock. After 8-bit data is output, the communication line holds the last-bit output state. In clock synchronous mode, neither parity bit nor multi-processor bit can be added. The transmitter and the receiver are independent in the SCI3, enabling full-duplex communication by using a common clock. Both the transmitter and the receiver have a double-buffered structure so that the next transmit data can be written during transmission or the previous receive data can be read during reception, enabling continuous data transfer.

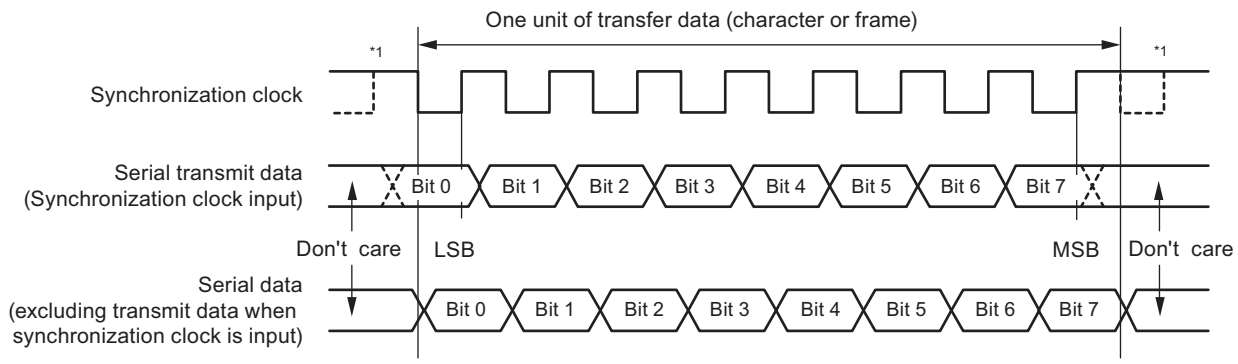

Note 1: Holds a high level except during continuous transmission/reception.

Figure 15.18 Data Format in Clock Synchronous Mode (LSB-First)

15.6.1 Clock

An internal clock generated by the on-chip baud rate generator or an external synchronous clock that is input from the SCInSCK pin can be selected by the setting of the CKE1 and CKE0 bits in SCI3nSCR. When operating the SCI3 on the internal clock, a synchronous clock is output from the SCInSCK pin. Eight pulses of the synchronous clock are output during transfer of one character, and the clock is held high while no data is transferred.

15.6.2 SCI3 Initialization (Clock Synchronous Mode)

Before transmitting and receiving data, clear the TE and RE bits in SCI3nSCR to 0 and then initialize the SCI3 according to the sample flowchart in **Figure 15.19**. To switch the operation between transmission, reception, and transmission/reception, clear the TE and RE bits to 0 and then set these bits to the desired value. Before changing the transfer format, be sure to clear the TE and RE bits to 0. Note that clearing the TE bit to 0 sets the TDRE flag to 1, but clearing the RE bit to 0 initializes neither the RDRF, PER, FER, and ORER flags nor SCI3nRDR.

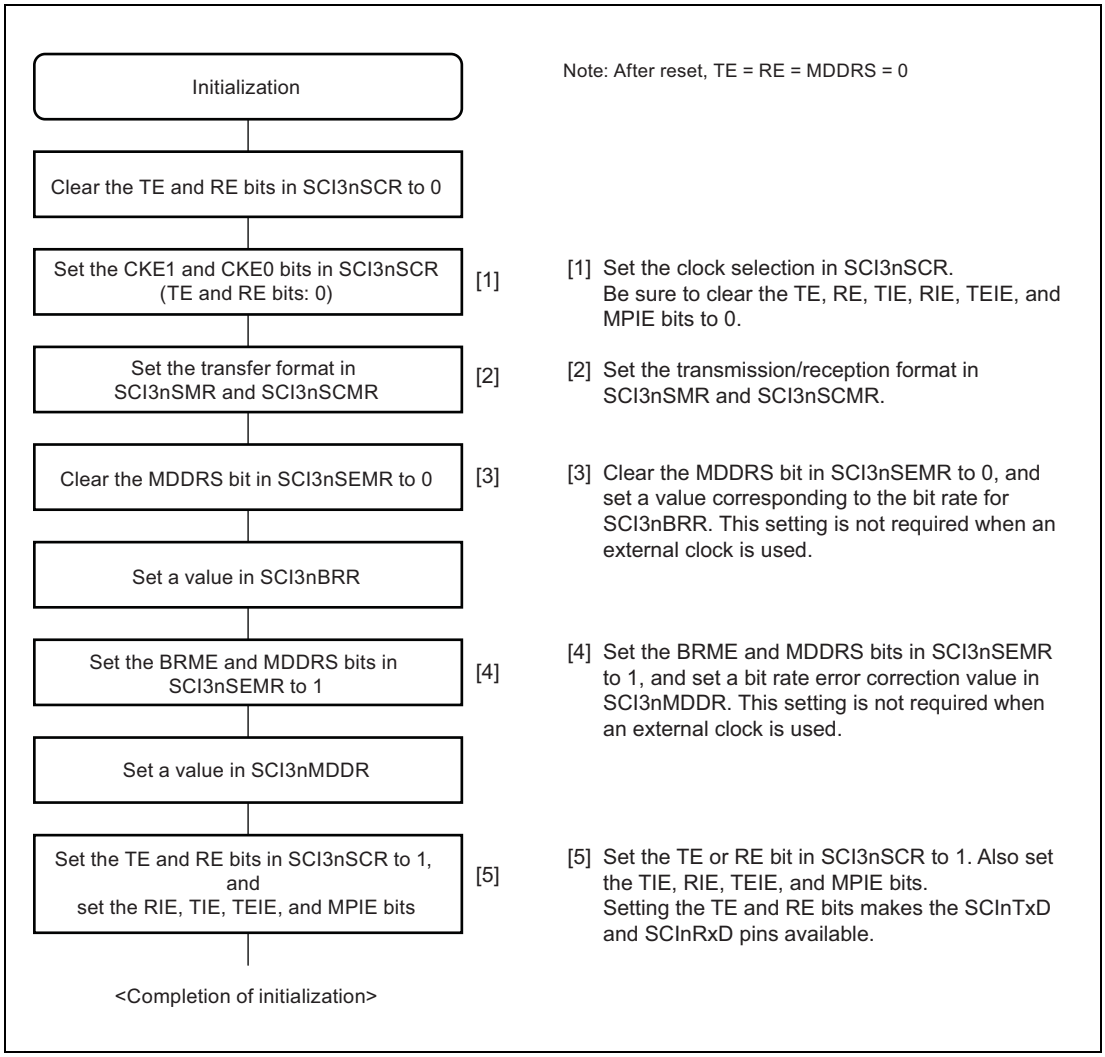

Figure 15.19 Example of SCI3 Initialization Flowchart

15.6.3 Serial Data Transmission (Clock Synchronous Mode)

Figure 15.20 shows an example of the operation for serial transmission in clock synchronous mode. In serial data transmission, the SCI3 operates as described below.

1. When transmit data is written to SCI3nTDR, the TDRE flag is automatically cleared to 0. The SCI3 monitors the TDRE flag in SCI3nSSR. When the flag is cleared, the SCI3 recognizes that data has been written to SCI3nTDR and transfers data from SCI3nTDR to SCI3nTSR, starting output of the first bit when the synchronization clock is input. To write transmit data to SCI3nTDR at a trigger of INTSCI3nTXI interrupt request, set the TIE bit to 1 and then set the TE bit to 1 or set both TIE and TE bits simultaneously with one instruction to generate a INTSCI3nTXI interrupt request for starting data transfer.
2. Transmission starts after data is transferred from SCI3nTDR to SCI3nTSR, and the TDRE flag is set to 1. When the TIE bit in SCI3nSCR is set to 1 at this time, a INTSCI3nTXI interrupt request is generated. Continuous transmission is enabled by writing the next transmit data to SCI3nTDR in this INTSCI3nTXI interrupt processing routine before the previously transferred data has been transmitted. When a INTSCI3nTEI interrupt request is used, the TIE bit is cleared to 0 after the last transmit data has been written to SCI3nTDR, and the TEIE bit is set to 1.
3. 8-bit data is output from the SCInTxD pin in synchronization with the output clock (when clock output mode has been specified) or in synchronization with the input clock (when external clock has been specified).
4. The SCI3 checks for the TDRE flag at the time of the last bit output.
5. When the TDRE flag is 0, the next transmit data is transferred from SCI3nTDR to SCI3nTSR, and serial transmission of the next frame starts.
6. When the TDRE flag is 1, the TEND flag in SCI3nSSR is set to 1 and the SCInSCK pin retains the output state of the last bit. If the TEIE bit in SCI3nSCR is set to 1 at this time, a INTSCI3nTEI interrupt request is generated. The SCInSCK pin is held high.

Figure 15.21 shows a sample flowchart of serial data transmission. Also, **Figure 15.22** shows a sample flowchart for stopping the SCI3 after data transmission. Transmission will not start even if the TDRE flag is cleared while a receive error flag (ORER) is set to 1. Be sure to clear the receive error flags to 0 before starting transmission. Note that clearing the RE bit to 0 does not clear the receive error flags.

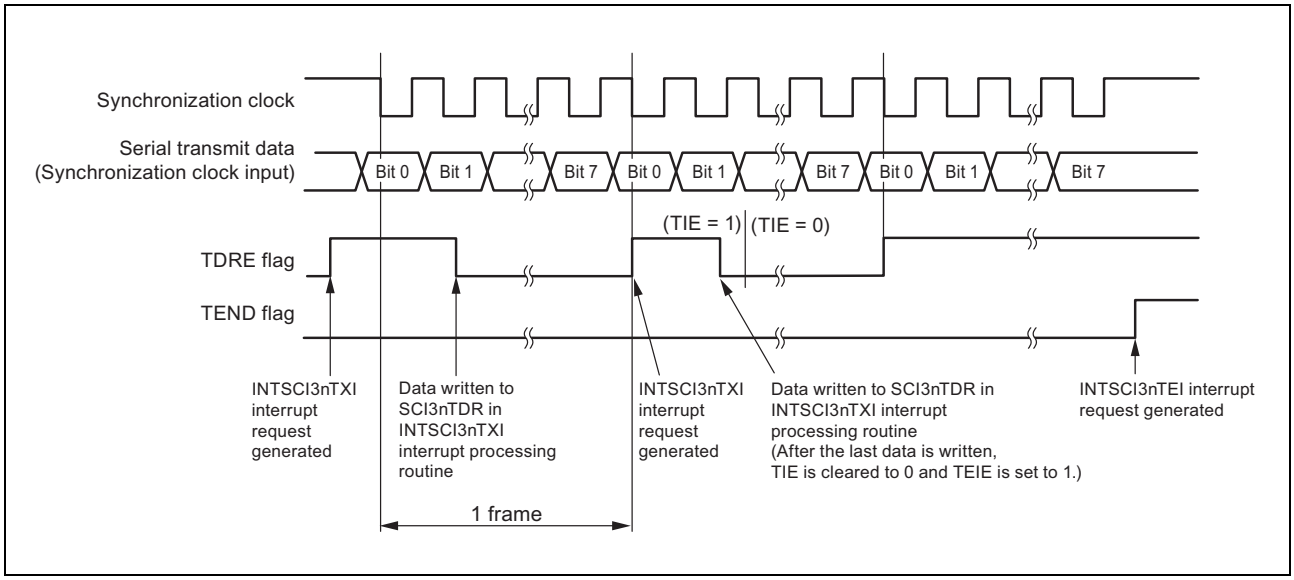

Figure 15.20 Example of Operation for Transmission in Clock Synchronous Mode

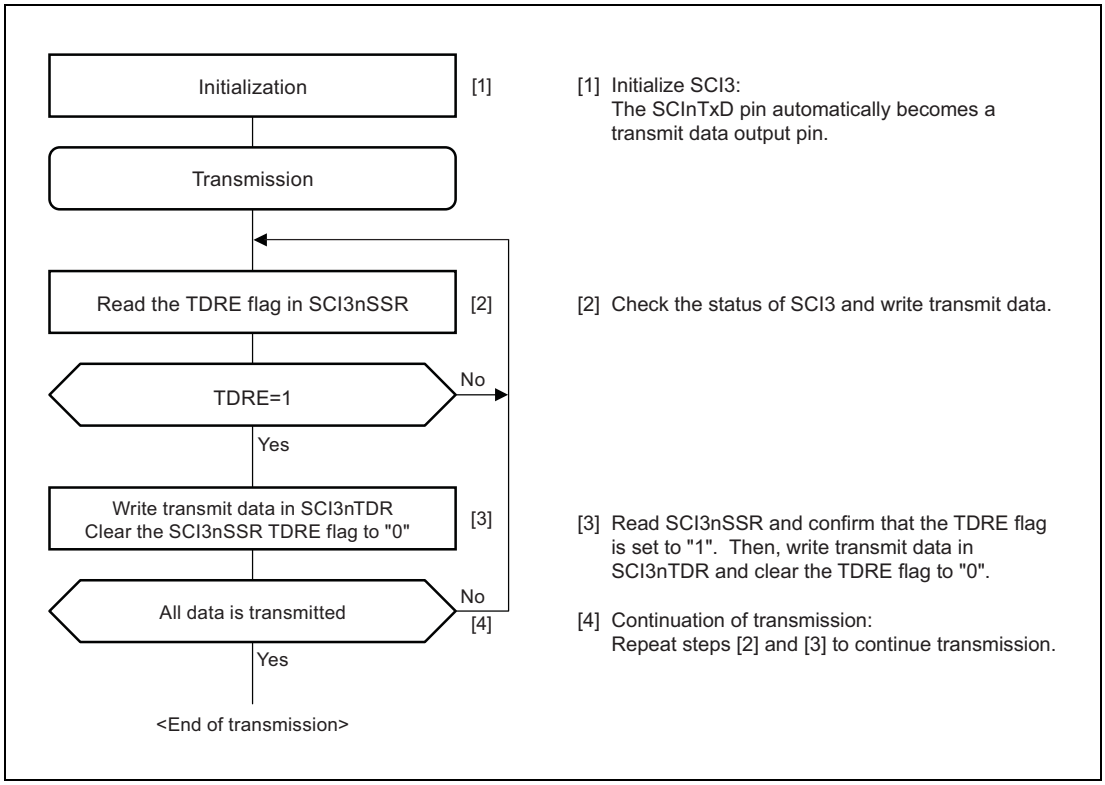

Figure 15.21 Example of Serial Transmission Flowchart

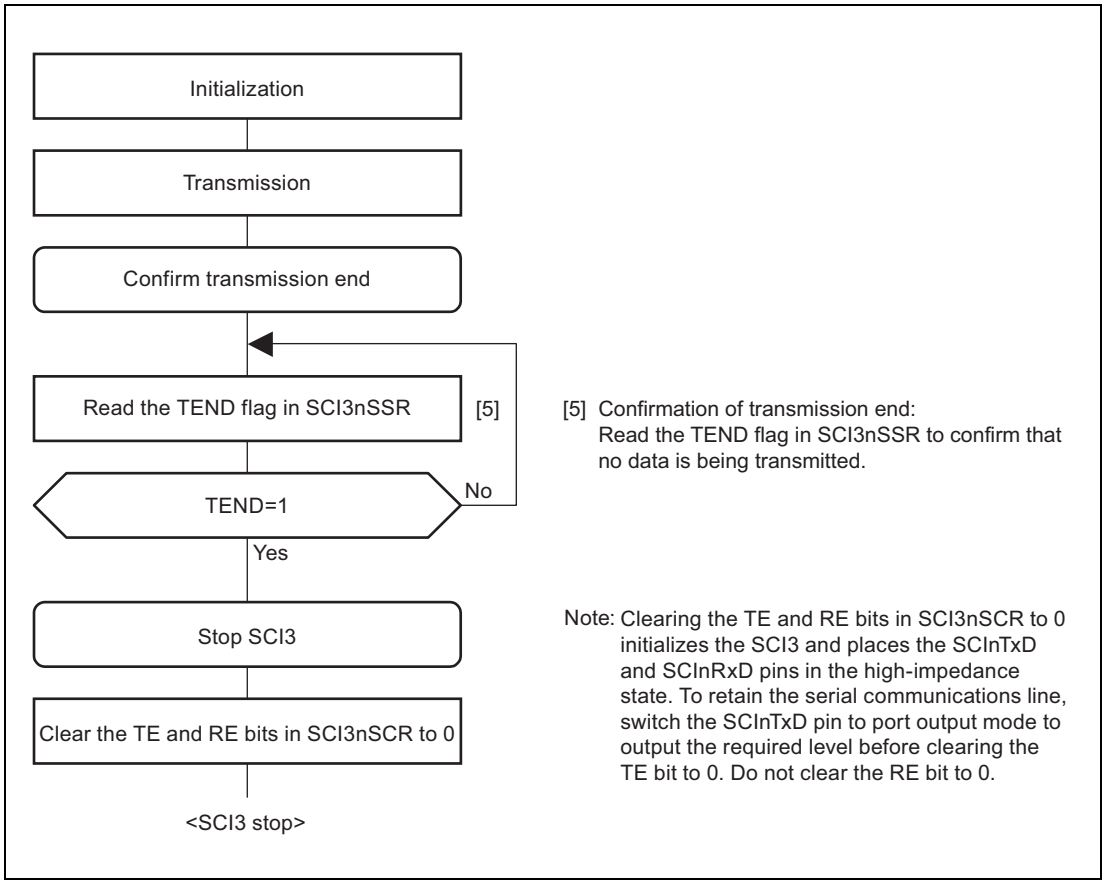

Figure 15.22 Example Flowchart for Stopping the SCI3 after Serial Transmission

15.6.4 Serial Data Reception (Clock Synchronous Mode)

Figure 15.23 shows an example of SCI3 operation for serial reception in clock synchronous mode. In serial data reception, the SCI3 operates as described below.

1. The SCI3 performs internal initialization and starts receiving data in synchronization with a synchronization clock input or output, and stores receive data in SCI3nRSR.
2. When an overrun error occurs (the reception of the next data is completed with the RDRF flag in SCI3nSSR set to 1), the ORER flag in SCI3nSSR is set to 1. If the RIE bit in SCI3nSCR is set to 1 at this time, an INTSCI3nERI interrupt request is generated. Receive data is not transferred to SCI3nRDR. The RDRF flag retains the state of being set to 1.
3. When data has been successfully received, the RDRF flag in SCI3nSSR is set to 1 and the receive data is transferred to SCI3nRDR. When the RIE bit in SCI3nSCR is set to 1 at this time, an INTSCI3nRXI interrupt request is generated. Continuous reception is enabled by reading the receive data transferred to SCI3nRDR in this INTSCI3nRXI interrupt processing routine before reception of the next data is completed. Reading SCI3nRDR automatically clears the RDRF flag to 0.

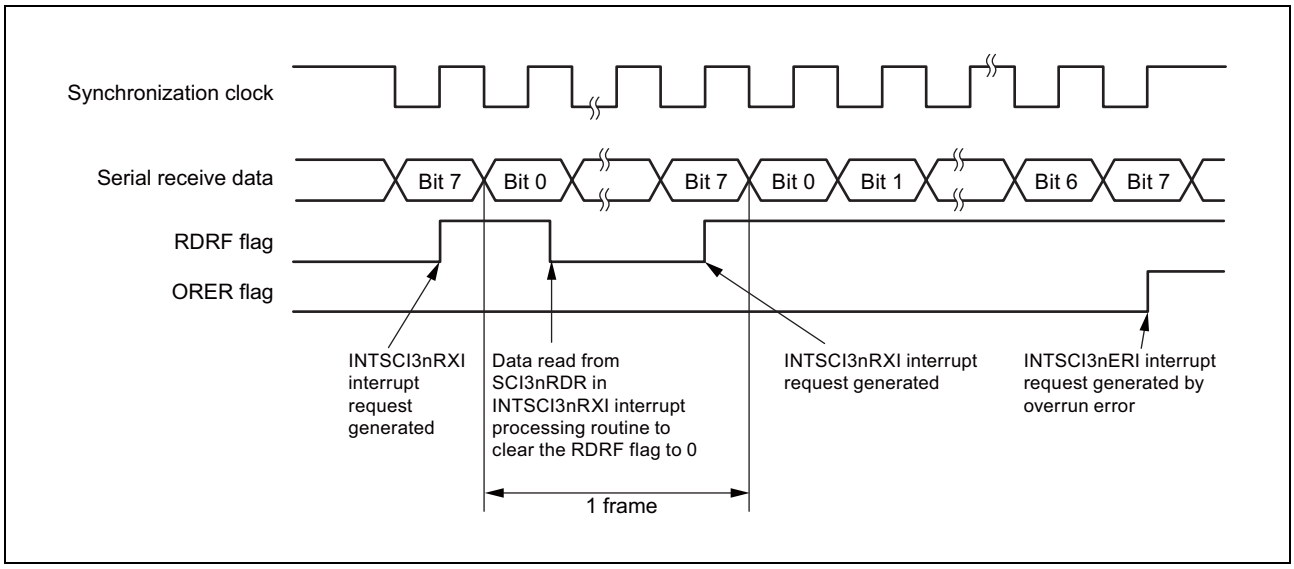

Figure 15.23 Example of SCI3 Operation for Reception

Subsequent transmission and reception are disabled with a receive error flag set to 1. Therefore, be sure to clear the ORER, FER, PER, and RDRF flags to 0 before continuing reception. **Figure 15.24** shows an example of flowchart for data reception.

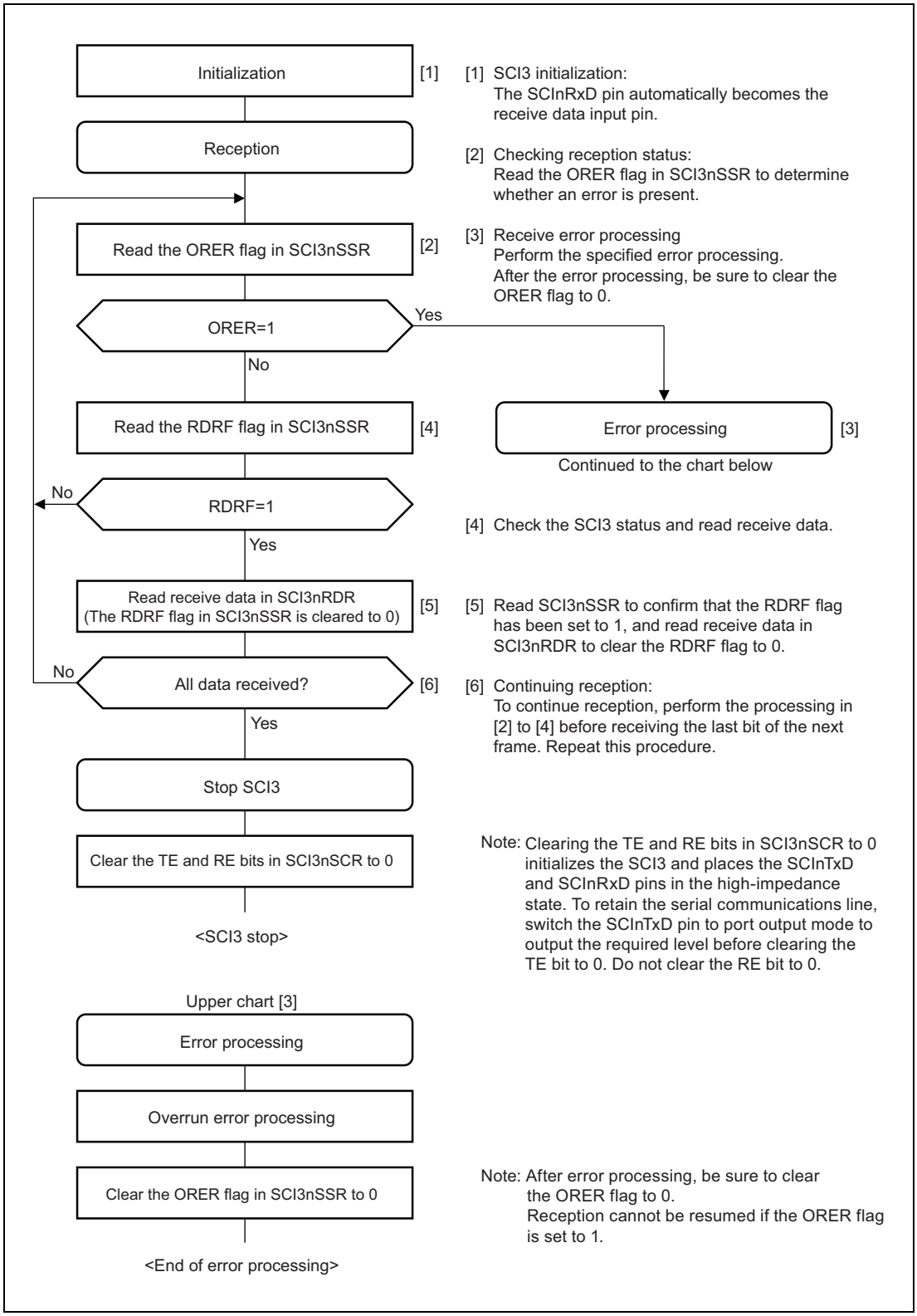

Figure 15.24 Example of Serial Reception Flowchart

15.6.5 Simultaneous Serial Data Transmission and Reception (Clock Synchronous Mode)

Figure 15.25 shows a sample flowchart for simultaneous data transmit and receive operations. After the SCI3 is initialized, perform the following procedure for simultaneous data transmit and receive operations.

1. To change transmit mode to simultaneous transmit and receive mode, check that the SCI3 has finished transmission and the TDRE and TEND flags are set to 1. Then clear the TE bit to 0 and then set the TE and RE bits to 1 with a single instruction.
2. To change receive mode to simultaneous transmit and receive mode, check that the SCI3 has finished reception and clear the RE bit to 0. Then check that the RDRF and error flags (ORER, FER, and PER) are cleared to 0 and then set the TE and RE bits to 1 with a single instruction.

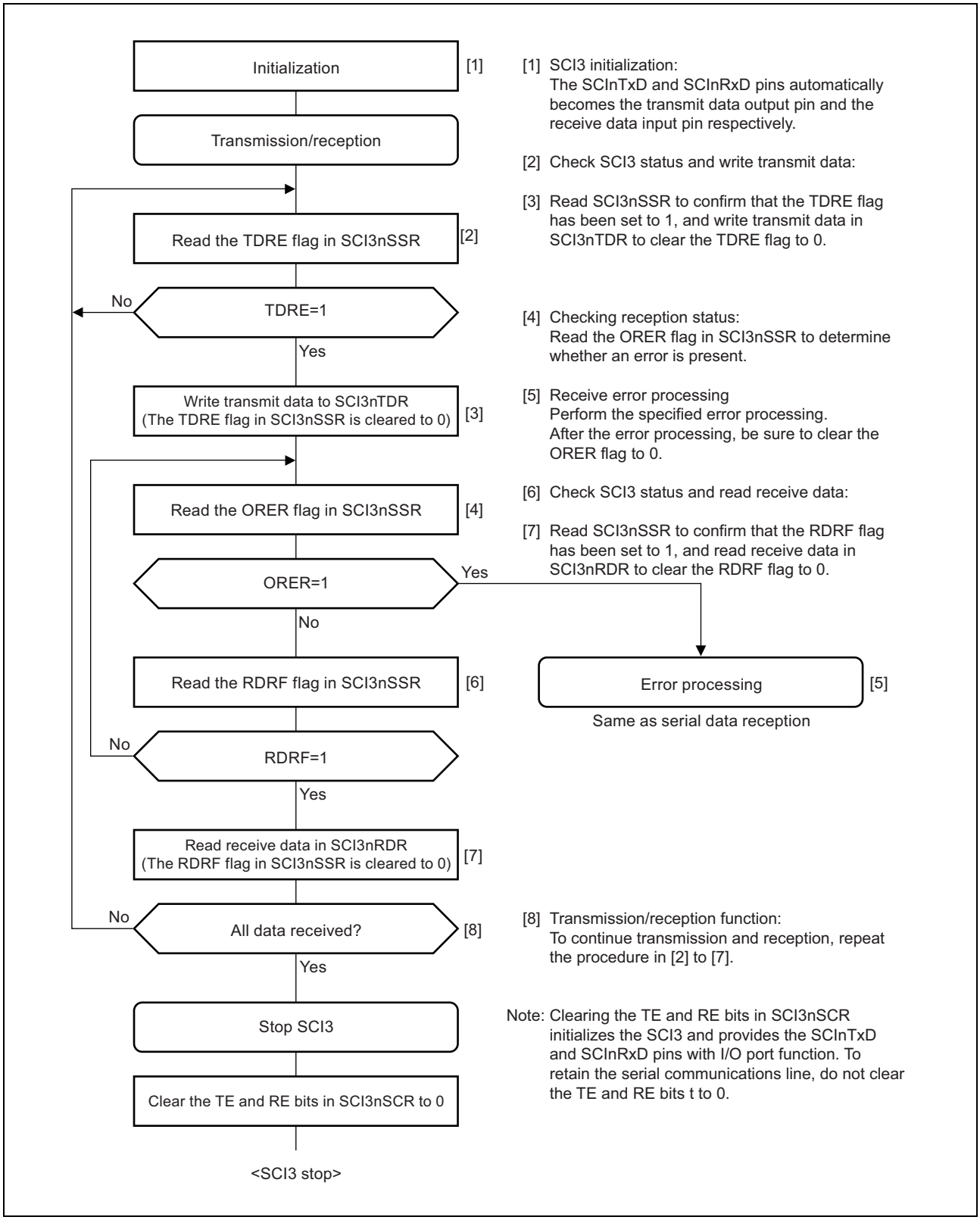

Figure 15.25 Example of Simultaneous Serial Transmission and Reception Flowchart

15.7 Bit Rate Modulation Function

The bit rate modulation function corrects a bit rate by averagely enabling the internal clocks specified by the CKS1 and CKS0 bits in SCI3nSMR for the number specified by SCI3nMDDR out of 256 clocks.

Figure 15.26 shows an example of asynchronous mode in which PCLK clock is selected with the CKS1 and CKS0 bits, SCI3nBRR is set to 0, and SCI3nMDDR is set to 160. In this example, the reference clock cycle is corrected to 256/160 on average and the bit rate is corrected to 160/256. Note that the pulse widths of the internal reference clock expand or contract for the amount of the selected internal clocks because there is a deviation in the enabling of the internal clocks.

Do not use this function with the maximum speed settings (CKS1 and CKS0 bits = 0 in SCI3nSMR, CKE1 bit = 0 in SCI3nSCR, and SCI3nBRR = 0) for clock synchronous mode.

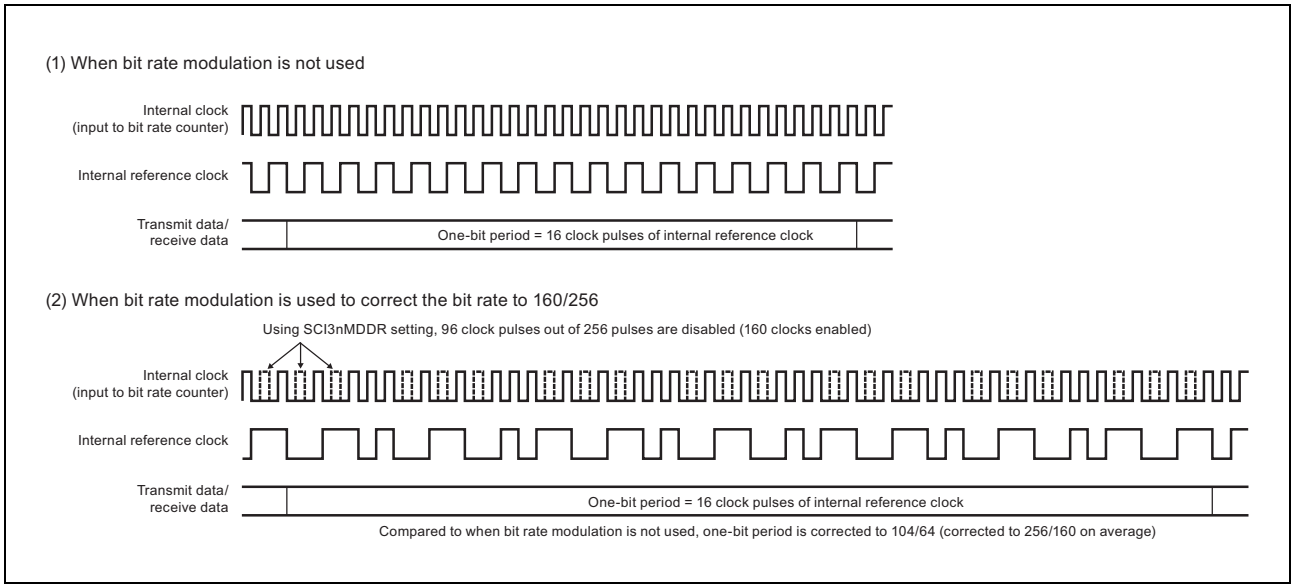

Figure 15.26 Example of Internal Reference Clock when the Bit Rate Modulation Function is Used

15.8 Interrupt Sources

Table 15.26 lists interrupt sources. Each interrupt source outputs an individual interrupt request signal. These interrupt sources can be enabled independently with the enable bit in SCI3nSCR.

A INTSCI3nTXI interrupt request is generated when the TDRE flag in SCI3nSSR is set to 1. A INTSCI3nTEI interrupt request is generated when the TEND flag in SCI3nSSR is set to 1. A INTSCI3nTXI interrupt request can activate the DMAC to handle data transfer. The TDRE flag is automatically cleared to 0 when data is transferred using the DMAC.

CAUTION

The TDRE flag and TEND flag cannot be cleared to 0 when the TE bit in SCI3nSCR is 0. The TEND flag is the level interrupt request flag for the INTSCI3nTEI interrupt.

Therefore, when the TE bit is 0, do not set the TEIE bit in SCI3nSCR to 1.

An INTSCI3nRXI interrupt request is generated when the RDRF flag in SCI3nSSR is set to 1. An INTSCI3nERI interrupt is generated when either of the ORER, PER, and FER flags in SCI3nSSR is set to 1. An INTSCI3nRXI interrupt request can activate the DMAC to handle data transfer. The RDRF flag is automatically cleared to 0 when data is transferred using the DMAC.

A INTSCI3nTEI interrupt request is generated when the TEND flag is set to 1 with the TEIE bit set to 1.

CAUTION

If a INTSCI3nTEI interrupt request and a INTSCI3nTXI interrupt request are generated at the same time, the INTSCI3nTXI interrupt request is accepted first. Note that clearing the TDRE flag to 0 at this time in the INTSCI3nTXI interrupt processing routine also clears the TEND flag to 0 automatically, disabling the branch to the INTSCI3nTEI interrupt processing routine.

Table 15.26 SCI3 Interrupt Sources

Name	Interrupt Source	Interrupt Flag	DMAC Activation	DTS Activation
INTSCI3nERI	Receive error	ORER, FER, PER	Not possible	Not possible
INTSCI3nRXI	Receive data full	RDRF	Possible	Possible
INTSCI3nTXI	Transmit data empty	TDRE	Possible	Possible
INTSCI3nTEI	Transmit end	TEND	Not possible	Not possible

15.9 Usage Notes

15.9.1 Break Detection and Processing

A break can be detected by reading the RXDMON bit in SCI3nSEMR when detecting a framing error. Since all inputs from the SCInRxD pin are 0 in the break state, the FER flag is set to 1 and the PER flag may also be set to 1. The SCI3 also continues data reception after it receives a break. For this reason, note that the FER flag is set to 1 again even after the FER flag is cleared to 0.

15.9.2 Mark State and Break Output

While the TE bit is 0 (transmission/reception disabled), the SCInTxD pin can output any level by switching the SCInTxD pin to a general output port. This allows the SCInTxD pin to be the mark state or break output during data transmission. When the TE bit is cleared to 0, the transmitter unit is initialized regardless of the current transmission state.

15.9.3 Receive Error Flags and Transmit Operations in Clock Synchronous Mode

During the clock synchronous simultaneous data transmit/receive operation, transmission cannot be started when a receive error flag (ORER) is set to 1, even if the TDRE flag is cleared to 0. Be sure to clear the receive error flags to 0 before starting transmission. Note that the receive error flags cannot be cleared to 0 even by clearing the RE bit to 0.

15.9.4 Relationship between Writing to SCI3nTDR and the TDRE Flag

The TDRE flag in SCI3nSSR is a status flag indicating that transmit data in SCI3nTDR has been transferred to SCI3nTSR. The TDRE flag is set to 1 when the SCI3 transfers data from SCI3nTDR to SCI3nTSR.

Data can be written to SCI3nTDR regardless of the status of the TDRE flag. However, writing new data to SCI3nTDR while the TDRE flag is 0 will make the data stored in SCI3nTDR lost because it has not been transferred to SCI3nTSR. Therefore, make sure to check that the TDRE flag is set to 1 before writing transmit data to SCI3nTDR.

15.9.5 Restrictions on Using an External Clock for Transmission in Clock Synchronous Mode

When using an external synchronization clock, clear the TDRE flag to 0 and then input a transmission clock (See **Figure 15.27**). Also in continuous transmission mode, clear the TDRE flag to 0 and then input a transmission clock for the next frame.

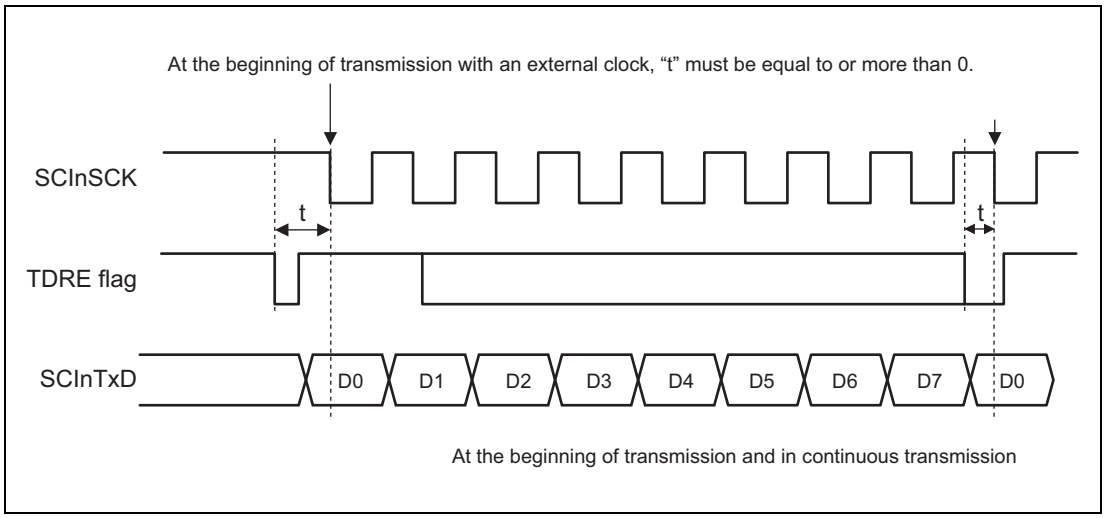

Figure 15.27 Restrictions on Using an External Clock for Transmission in Clock Synchronous Mode

15.9.6 External Clock Input in Clock Synchronous Mode

For the external clock SCInSCK input in clock synchronous mode, see **Section 37.9.7, SCI3 Timing**.

Section 16 LIN/UART Interface (RLIN3)

This section contains a generic description of the LIN/UART interface (RLIN3).

The first part of this section describes all RH850/P1x specific properties, such as the number of units, register base addresses, etc. The remainder of the section describes the functions and registers of RLIN3.

16.1 Features of RH850/P1x RLIN3

16.1.1 Number of Units and Channels

This microcontroller has the following number of RLIN3 units.

RLIN3 unit has one channel interface. “Number of channels” is used with the same meaning as “number of units” in this section.

Table 16.1 Number of Units

Product Name	RH850/P1x 100 pins	RH850/P1x 144 pins
Number of units	2	2
Name	RLIN3n (n = 0, 1)	RLIN3n (n = 0, 1)

Table 16.2 Unit Configurations and Channels

Unit Name (Channel Name) RLIN3n	Channels per Unit	RH850/P1x 100 pins (2 ch)	RH850/P1x 144 pins (2 ch)
RLIN30	1	√	√
RLIN31	1	√	√

Note: The channel names are same as those of the corresponding units.

Table 16.3 Index

Index	Meaning
n	Throughout this section, the individual RLIN3 units are identified by the index “n” (n = 0): for example, RLN3nLCUC is the LIN control register.
b	Throughout this section, the individual transmit/receive data buffers of RLIN3n are identified by the index “b” (b = 1 to 8): for example, RLIN3nLDBR1 is the first stage data buffer register.

The following lists the values of indices for individual products.

Table 16.4 Indices for Individual Products

Indices for Individual Products
All products
b = 1 to 8

16.1.2 Register Base Address

RLIN3 base addresses are listed in the following table.

RLIN3 register addresses are given as offsets from the base addresses in general.

Table 16.5 Register Base Address

Base Address Name	Base Address
<RLIN30_base>	FFDF 8000_H
<RLIN31_base>	FFDF 9000_H

16.1.3 Clock Supply

The RLIN3 clock supply is shown in the following table.

Table 16.6 Clock Supply

Unit Name	Clock for the Unit	Supply Clock Name
RLIN3n	LIN communication clock sources	High-speed peripheral clock CLK_HSB

16.1.4 Interrupt Request

RLIN3 interrupt requests are listed in the following table.

Table 16.7 Interrupt Requests

Unit Interrupt Signal	Outline	Interrupt Number	DMA Trigger Number
RLIN30			
INTRLIN3nUR2 (n = 0)	RLIN30 status interrupt	114	—
INTRLIN3nUR1 (n = 0)	RLIN30 receive completion interrupt	115	95
INTRLIN3nUR0 (n = 0)	RLIN30 transmit interrupt	116	96
RLIN31			
INTRLIN3nUR2 (n = 1)	RLIN31 status interrupt	117	—
INTRLIN3nUR1 (n = 1)	RLIN31 receive completion interrupt	118	97
INTRLIN3nUR0 (n = 1)	RLIN31 transmit interrupt	119	98

16.1.5 Reset Sources

RLIN3 reset sources are listed in the following table. RLIN3 is initialized by these reset sources.

Table 16.8 Reset Sources

Unit Name	Reset Source
RLIN3n	Reset controller SYSRES

16.1.6 External Input/output Signals

External input/output signals of RLIN3 are listed below.

Table 16.9 External Input/Output Signals

Unit Signal Name	Outline	Alternative Port Pin Signal
RLIN30		
RLIN3nRX (n = 0)	RLIN30 receive data input	RLIN30RX
RLIN3nTX (n = 0)	RLIN30 transmit data output	RLIN30TX
RLIN31		
RLIN3nRX (n = 1)	RLIN31 receive data input	RLIN31RX
RLIN3nTX (n = 1)	RLIN31 transmit data output	RLIN31TX

16.1.7 Combination of Pin Name and Port Name

Table 16.10 Combination of Pin Name and Port Name

Function	Pin Name	Port Name					
		Group 1	Group 2	Group 3	Group 4	Group 5	Group 6
RLIN30	RLIN30RX	P1_1	P3_4	P4_0	P5_10	P5_14	P5_14
	RLIN30TX	P1_0*1	P3_5	P4_1	P5_11*1	P5_15*1	P0_0
RLIN31	RLIN31RX	P2_5	P0_1	P5_15*1	P5_12*1	—	—
	RLIN31TX	P2_4	P3_11	P3_11	P5_13*1	—	—

Note 1. Available in 144-pin products

16.2 Overview

16.2.1 Functional Overview

The LIN/UART interface is a hardware LIN communication controller that supports LIN Specification Package Revision 1.3, 2.0, 2.1, 2.2, and SAE J2602, and automatically performs frame communication and error determination.

The LIN/UART interface is provided with UART mode and can also be used as a UART.

The appropriate mode should be used for the LIN/UART interface according to the application: LIN master, or UART.

LIN master

- LIN reset mode
- LIN mode (LIN master mode)
  - LIN wake-up mode
  - LIN operation mode
- LIN self-test mode

UART

- LIN reset mode
- UART mode

Table 16.11 gives the LIN/UART interface specifications.

Table 16.11 LIN/UART Interface Specifications (1/2)

Item		Specifications	
Number of Channel		2 channels	
LIN communication function	Protocol	LIN Specification Package Revision 1.3, 2.0, 2.1, 2.2, and SAE J2602	
	Variable frame structure	Master	• Break transmission width: 13 to 28 Tbits • Break delimiter transmission width: 1 to 4 Tbits • Transmission inter-byte space width (header): 0 to 7 Tbits (space between Sync field and ID field)*1 • Transmission response space width: 0 to 7 Tbits*1 • Transmission inter-byte space width: 0 to 3 Tbits (space between data bytes in response area) • Transmission wake-up width: 1 to 16 Tbits
	Checksum	• Automatic operation for both transmission and reception • Classic or enhanced selectable (for each frame)	
	Response field data byte count	Variable from 0 to 8 bytes Multi-byte (9 or more bytes) response transmission and reception also possible	
	Frame communication mode	Master	• Mode in which header transmission and response transmission/reception is started with a single transmission start request • Mode in which header transmission and response transmission are started with separate transmission start requests (frame separate mode)
	Wake-up transmission and reception	LIN wake-up mode provided • Wake-up transmission (1 to 16 Tbits) • Wake-up reception Low-level width of input signals measured	
	Status	Master	• Frame/wake-up transmission complete • Header transmission complete • Frame/wake-up reception complete*2 • Data 1 reception complete • Error detection • Operation mode (LIN reset mode, LIN wake-up mode, LIN operation mode, LIN self-test mode)
	Error status	Master	• Bit error • Checksum error • Frame timeout error/response timeout error • Physical bus error • Framing error • Response preparation error
	Baud rate selection	Baud rate conforming to the LIN specifications generated using baud rate generator	
	Test mode	Self-test mode for user evaluation	
	Interrupt function	Master	• Header/frame/wake-up transmission complete • Frame/wake-up reception complete*2 • Error detection

Table 16.11 LIN/UART Interface Specifications (2/2)

Item		Specifications
UART communication function	Data buffer	• Transmission data buffer/transmission data buffer for wait (exclusively for transmission; data length of 1. Character length of 7, 8, and 9 bits supported) • UART buffer (exclusively for transmission; variable data length from 1 to 9 bits; character length of 7 and 8 bits supported) • Reception data buffer (exclusively for reception; data length of 1. Character length of 7, 8, and 9 bits supported)
	Data format	Character length: 7 or 8 bits 9 bits including the expansion bit supported.
		Transmission stop bit: 1 or 2 bits
		Parity function: odd, even, 0, or none
		LSB- or MSB-first transfer selectable
		Reverse input/output of transmission/reception data
	Status	• Transmission status • Reception status • Successful UART buffer transmission • Error detection • Expansion bit detection • ID match • Reset mode status
	Error status	• Bit error • Framing error • Parity error • Overrun error
	Baud rate selection	With the baud rate generator incorporated, any baud rate can be set.
	When a certain expansion bit is at the expected level, the data received can be compared to the 8-bit data preset in the register.	
	The stop bit received is guaranteed (start of transmission can be delayed when start of transmission is attempted during reception of the stop bit).	
	Interrupt function	• Transmission start/complete • Reception complete • Status/error detection

Note 1. Since the same register is used for setting, the inter-byte space (header) = response space.

Note 2. For wake-up reception, the low level width of the input signal is indicated.

16.2.2 Block Diagram

Figure 16.1 shows a block diagram of the LIN/UART interface.

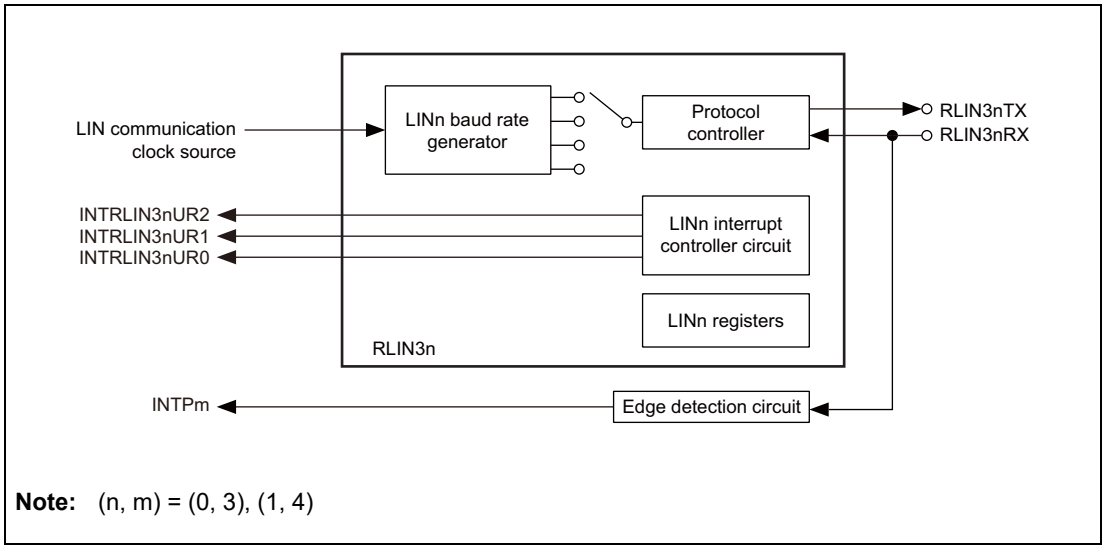

Figure 16.1 LIN/UART Interface Block Diagram

16.2.3 Description of Blocks

- RLIN3nTX, RLIN3nRX: LIN/UART interface I/O pins
- LINn baud rate generator: Generates the LIN/UART interface communication clock signal.
- LINn registers: LIN/UART interface registers
- LINn interrupt controller circuit: Controls interrupt requests generated by the LIN/UART interface

16.3 Registers

16.3.1 List of Registers

RLIN3 registers are listed in the following table.

For <RLIN3n_base>, see **Section 16.1.2, Register Base Address**.

Table 16.12 Registers

Module	Register	Symbol	Address	LIN Master	UART
RLIN3n	LIN wake-up baud rate selector register	RLN3nLWBR	<RLIN3n_base> + 01_H	√	√
RLIN3n	LIN/ UART baud rate prescaler 01 register	RLN3nLBRP01	<RLIN3n_base> + 02_H	—	√
RLIN3n	LIN/ UART baud rate prescaler 0 register	RLN3nLBRP0	<RLIN3n_base> + 02_H	√	√
RLIN3n	LIN/ UART baud rate prescaler 1 register	RLN3nLBRP1	<RLIN3n_base> + 03_H	√	√
RLIN3n	LIN self-test control register	RLN3nLSTC	<RLIN3n_base> + 04_H	√	—
RLIN3n	LIN/ UART mode register	RLN3nLMD	<RLIN3n_base> + 08_H	√	√
RLIN3n	LIN break field configuration register/ UART configuration register	RLN3nLBFC	<RLIN3n_base> + 09_H	√	√
RLIN3n	LIN / UART space configuration register	RLN3nLSC	<RLIN3n_base> + $0A_H$	√	√
RLIN3n	LIN wake-up configuration register	RLN3nLWUP	<RLIN3n_base> + $0B_H$	√	—
RLIN3n	LIN interrupt enable register	RLN3nLIE	<RLIN3n_base> + $0C_H$	√	—
RLIN3n	LIN / UART error detection enable register	RLN3nLEDE	<RLIN3n_base> + $0D_H$	√	√
RLIN3n	LIN/ UART control register	RLN3nLCUC	<RLIN3n_base> + $0E_H$	√	√
RLIN3n	LIN / UART transmission control register	RLN3nLTRC	<RLIN3n_base> + 10_H	√	√
RLIN3n	LIN/ UART mode status register	RLN3nLMST	<RLIN3n_base> + 11_H	√	√
RLIN3n	LIN / UART status register	RLN3nLST	<RLIN3n_base> + 12_H	√	√
RLIN3n	LIN/ UART error status register	RLN3nLEST	<RLIN3n_base> + 13_H	√	√
RLIN3n	LIN data field configuration register	RLN3nLDFC	<RLIN3n_base> + 14_H	√	√
RLIN3n	LIN / UART ID buffer register	RLN3nLIDB	<RLIN3n_base> + 15_H	√	√
RLIN3n	LIN checksum buffer register	RLN3nLCBR	<RLIN3n_base> + 16_H	√	—
RLIN3n	UART data 0 buffer register	RLN3nLUDB0	<RLIN3n_base> + 17_H	—	√
RLIN3n	LIN / UART data buffer 1 register	RLN3nLDBR1	<RLIN3n_base> + 18_H	√	√
RLIN3n	LIN/ UART data buffer 2 register	RLN3nLDBR2	<RLIN3n_base> + 19_H	√	√
RLIN3n	LIN/ UART data buffer 3 register	RLN3nLDBR3	<RLIN3n_base> + $1A_H$	√	√
RLIN3n	LIN / UART data buffer 4 register	RLN3nLDBR4	<RLIN3n_base> + $1B_H$	√	√
RLIN3n	LIN / UART data buffer 5 register	RLN3nLDBR5	<RLIN3n_base> + $1C_H$	√	√
RLIN3n	LIN / UART data buffer 6 register	RLN3nLDBR6	<RLIN3n_base> + $1D_H$	√	√
RLIN3n	LIN / UART data buffer 7 register	RLN3nLDBR7	<RLIN3n_base> + $1E_H$	√	√
RLIN3n	LIN/ UART data buffer 8 register	RLN3nLDBR8	<RLIN3n_base> + $1F_H$	√	√
RLIN3n	UART operation enable register	RLN3nLUOER	<RLIN3n_base> + 20_H	—	√
RLIN3n	UART option register 1	RLN3nLUOR1	<RLIN3n_base> + 21_H	—	√
RLIN3n	UART transmission data register	RLN3nLUTDR	<RLIN3n_base> + 24_H	—	√
RLIN3n	UART transmission data register L	RLN3nLUTDRL	<RLIN3n_base> + 24_H	—	√
RLIN3n	UART transmission data register H	RLN3nLUTDRH	<RLIN3n_base> + 25_H	—	√
RLIN3n	UART reception data register	RLN3nLURDR	<RLIN3n_base> + 26_H	—	√
RLIN3n	UART reception data register L	RLN3nLURDRL	<RLIN3n_base> + 26_H	—	√
RLIN3n	UART reception data register H	RLN3nLURDRH	<RLIN3n_base> + 27_H	—	√
RLIN3n	UART wait transmission data register	RLN3nLUWTDR	<RLIN3n_base> + 28_H	—	√
RLIN3n	UART wait transmission data register L	RLN3nLUWTDRL	<RLIN3n_base> + 28_H	—	√
RLIN3n	UART wait transmission data register H	RLN3nLUWTDRH	<RLIN3n_base> + 29_H	—	√

Note: √: Used, —: Not used
When writing to a register not used, write the value after reset.

16.3.2 LIN Master Related Registers

16.3.2.1 RLN3nLWBR — LIN Wake-Up Baud Rate Select Register

Access: This register can be read/written in 8-bit units

Address: <RLIN3n_base> + 01_H

Value after reset: 00_H

Bit	7	6	5	4	3	2	1	0
	NSPB[3:0]				LPRS[2:0]			LWBR0
Value after reset	0	0	0	0	0	0	0	0
R/W	R/W	R/W	R/W	R/W	R/W	R/W	R/W	R/W

Table 16.13 RLN3nLWBR Register Contents

Bit Position	Bit Name	Function
7 to 4	NSPB[3:0]	Bit Sampling Count Select b7 b4 0 0 0 0: 16 sampling 1 1 1 1: 16 sampling Settings other than the above are prohibited.
3 to 1	LPRS[2:0]	Prescaler Clock Select b3 b1 0 0 0: 1/1 0 0 1: 1/2 0 1 0: 1/4 0 1 1: 1/8 1 0 0: 1/16 1 0 1: 1/32 1 1 0: 1/64 1 1 1: 1/128
0	LWBR0	Wake-up Baud Rate Select 0: In LIN wake-up mode, the clock specified in the LCKS bit of the RLN3nLMD register is used. (for LIN1.3) 1: In LIN wake-up mode, the clock fa is used regardless of the setting in the LCKS bit of the RLN3nLMD register. (for LIN2.x)

Set the RLN3nLWBR register when the OMM0 bit in the RLN3nLMST register is 0_B (in LIN reset mode).

NSPB[3:0] Bits (Bit Sampling Count Select)

These bits select the number of sampling in one Tbit (reciprocal of the baud rate).
In LIN master mode (LIN/UART mode select bits in LIN mode register = 00_B), set these bits to 0000_B or 1111_B (16 sampling).

LPRS[2:0] Bits (Prescaler Clock Select)

These bits select the frequency division ratio for the prescaler.
The LIN communication clock source is divided by this prescaler.

LWBR0 Bit (Wake-up Baud Rate Select)

When LIN Specification Package Revision 1.3 is used, set the LWBR0 bit in the RLN3nLWBR register to 0. This allows the 2.5-Tbit or longer low-level width of the input signal to be measured.
When LIN Specification Package Revision 2.x is used, set the LWBR0 bit to 1. Setting the LWBR0 bit to 1 selects the LIN system clock (fLIN) as fa regardless of the setting of the RLN3nLMD.LCKS bit (the LCKS bit is not changed). This allows the 2.5-Tbit or longer low-level width of the input signal to be measured.

Setting the baud rate to 19200 bps while fa is selected allows the 130 µs or longer low-level width of the input signal to be detected during LIN wake-up mode regardless of the setting of the RLN3nLMD.LCKS bit.

16.3.2.2 RLN3nLBRP0 — LIN Baud Rate Prescaler 0 Register

Access: This register can be read/written in 8-bit units

Address: <RLIN3n_base> + 02_H

Value after reset: 00_H

Bit	7	6	5	4	3	2	1	0
	LBRP0[7:0]							
Value after reset	0	0	0	0	0	0	0	0
R/W	R/W	R/W	R/W	R/W	R/W	R/W	R/W	R/W

Table 16.14 RLN3nLBRP0 Register Contents

Bit Position	Bit Name	Function
7 to 0	LBRP0[7:0]	Assuming that the value set in this register is N (0 to 255), the baud rate prescaler divides the frequency of the prescaler clock by N + 1. Setting range: 00_H to FF_H

Set the RLN3nLBRP0 register when the OMM0 bit in the RLN3nLMST register is 0_B (in LIN reset mode).

The value set in this register is used to control the frequency of baud rate clock sources fa, fb, and fc.

Assuming that the value set in this register is N, baud rate prescaler 0 divides the frequency of the clock that is selected by the LPRS bits by N + 1.

The RLN3nLBRP0 and RLN3nLBRP1 registers are accessible in a 16-bit unit as RLN3nLBRP01.

16.3.2.3 RLN3nLBRP1 — LIN Baud Rate Prescaler 1 Register

Access: This register can be read/written in 8-bit units

Address: <RLIN3n_base> + 03_H

Value after reset: 00_H

Bit	7	6	5	4	3	2	1	0
	LBRP1[7:0]							
Value after reset	0	0	0	0	0	0	0	0
R/W	R/W	R/W	R/W	R/W	R/W	R/W	R/W	R/W

Table 16.15 RLN3nLBRP1 Register Contents

Bit Position	Bit Name	Function
7 to 0	LBRP1[7:0]	Assuming that the value set in this register is M (0 to 255), the baud rate prescaler divides the frequency of the prescaler clock by M + 1. Setting range: 00_H to FF_H

Set the RLN3nLBRP1 register when the OMM0 bit in the RLN3LMST register is 0_B (in LIN reset mode).

The value set in this register is used to control the frequency of baud rate clock source fd.

Assuming that the value set in this register is M, baud rate prescaler 1 divides the frequency of the clock that is selected by the LPRS bits (prescaler clock select bits) by M+1.

The RLN3nLBRP0 and RLN3nLBRP1 registers are accessible in 16-bit units as RLN3nLBRP01.

16.3.2.4 RLN3nLSTC — LIN Self-Test Control Register

Access: This register can be read/written in 8-bit units

Address: <RLIN3n_base> + 04_H

Value after reset: 00_H

Bit	7	6	5	4	3	2	1	0
	—	—	—	—	—	—	—	LSTM
Value after reset	0	0	0	0	0	0	0	0
R/W	R/W	R/W	R/W	R/W	R/W	R/W	R/W	R/W

Table 16.16 RLN3nLSTC Register Contents

Bit Position	Bit Name	Function
7 to 0	—	Writing $A7_H$, 58_H, and 01_H successively to the RLN3nLSTC register places the module into LIN self-test mode.
0	LSTM	LIN Self-Test Mode 0: The module is not in LIN self-test mode. 1: The module is in LIN self-test mode.

The RLN3nLSTC register cancels protection of LIN self-test mode.

Set the RLN3nLSTC register when the OMM0 bit in the RLN3nLMST register is 0_B (in LIN reset mode).

Writing $A7_H$, 58_H, and 01_H successively to the RLN3nLSTC register places the module into LIN self-test mode.

When successive writing is completed thus placing LIN self-test mode to be entered, the LSTM bit is set to 1.

Do not write any other value during successive writing.

For making transition to LIN self-test mode, see **Section 16.9, LIN Self-Test Mode**.

When read, bits 6 to 1 return "000000_B", and bit 7 returns an undefined value.

LSTM Bit (LIN Self-Test Mode)

When transition to LIN self-test mode is completed, the LSTM bit is set to 1.
For leaving LIN self-test mode, see **Section 16.9, LIN Self-Test Mode**.
Writing 1 to this bit does not affect the value of the RLN3nLSTC register if it is not a part of successive writing of $A7_H$, 58_H, and 01_H.

16.3.2.5 RLN3nLMD — LIN Mode Register

Access: This register can be read/written in 8-bit units

Address: <RLIN3n_base>+ 08_H

Value after reset: 00_H

Bit	7	6	5	4	3	2	1	0
	—	—	LRDNFS	LIOS	LCKS[1:0]		LMD[1:0]	
Value after reset	0	0	0	0	0	0	0	0
R/W	R	R	R/W	R/W	R/W	R/W	R/W	R/W

Table 16.17 RLN3nLMD Register Contents

Bit Position	Bit Name	Function
7, 6	Reserved	When read, the value after reset is read. When writing, write the value after reset.
5	LRDNFS	LIN Reception Data Noise Filtering Disable 0: The noise filter is enabled. 1: The noise filter is disabled.
4	LIOS	LIN Interrupt Output Select 0: No RLIN3n interrupt is used. 1: RLIN3n transmission interrupt, RLIN3n successful reception interrupt, and RLIN3n status interrupt are used.
3, 2	LCKS[1:0]	LIN System Clock Select b3 b2 0 0: fa (Clock generated by baud rate prescaler 0) 0 1: fb (1/2 clock generated by baud rate prescaler 0) 1 0: fc (1/8 clock generated by baud rate prescaler 0) 1 1: fd (1/2 clock generated by baud rate prescaler 1)
1, 0	LMD[1:0]	LIN/UART Mode Select b1 b0 0 0: LIN master mode

Set the RLN3nLMD register when the OMM0 bit in the RLN3nLMST register is 0_B (in LIN reset mode)

LRDNFS Bit (LIN Reception Data Noise Filtering Disable)

The LRDNFS bit enables or disables the noise filter when receiving data.
With 0 set, the noise filter is enabled when receiving data.
With 1 set, the noise filter is disabled when receiving data.

LIOS Bit (LIN Interrupt Output Select)

The LIOS bit selects the number of interrupt outputs from the LIN/UART interface.
With 0 set, no RLIN3 interrupt is generated from the LIN/UART interface.
With 1 set, the RLIN3n transmission interrupt, RLIN3n successful reception interrupt, and RLIN3n status interrupt are generated from the LIN/UART interface.
For each interrupt source, see **Section 16.4, Interrupt Sources**.

LCKS[1:0] Bits (LIN System Clock Select)

The LCKS bits select the clock to be input to the protocol controller.
With 00_B set, the protocol controller is provided with fa (clock generated by baud rate prescaler 0).
With 01_B set, the protocol controller is provided with fb (1/2 clock generated by baud rate prescaler 0).
With 10_B set, the protocol controller is provided with fc (1/8 clock generated by baud rate prescaler 0).
With 11_B set, the protocol controller is provided with fd (1/2 clock generated by baud rate prescaler 1).

With 1_B is set in the LWBR0 bit in the RLN3nLWBR register (LIN 2.x is used), and the RLN3nLMST register is 01_H (LIN wake-up mode), the protocol controller is provided with fa regardless of the setting of the bit (the LCKS bit is not changed)

LMD[1:0] Bits (LIN/UART Mode Select)

The LMD bits select the LIN/UART interface mode.
To use the LIN/UART interface as an LIN master, set these bits to 00_B.

16.3.2.6 RLN3nLBFC — LIN Break Field Configuration Register

Access: This register can be read/written in 8-bit units

Address: <RLIN3n_base> + 09_H

Value after reset: 00_H

Bit	7	6	5	4	3	2	1	0
	—	—	BDT[1:0]		BLT[3:0]			
Value after reset	0	0	0	0	0	0	0	0
R/W	R	R	R/W	R/W	R/W	R/W	R/W	R/W

Table 16.18 RLN3nLBFC Register Contents

Bit Position	Bit Name	Function
7, 6	Reserved	When read, the value after reset is read. When writing, write the value after reset.
5, 4	BDT[1:0]	Transmission Break Delimiter (High Level) Width Select b5 b4 0 0: 1 Tbit 0 1: 2 Tbits 1 0: 3 Tbits 1 1: 4 Tbits
3 to 0	BLT[3:0]	Transmission Break (Low Level) Width Select b3 b0 0 0 0 0: 13 Tbits 0 0 0 1: 14 Tbits 0 0 1 0: 15 Tbits : 1 1 1 0: 27 Tbits 1 1 1 1: 28 Tbits

Set the RLN3nLBFC register when the OMM0 bit in the RLN3nLMST register is 0_B (in LIN reset mode).

Some combinations of the set values result in the length of a frame exceeding the timeout time. Set the appropriate values in this register.

BDT[1:0] Bits (Transmission Break Delimiter (High Level) Width Select)

This bit is used to set the break high level width of transmission frame header.
1 Tbit to 4 Tbits can be set.

BLT[3:0] Bits (Transmission Break (Low Level) Width Select)

This BLT bits set the break low level width of transmission frame header.
13 Tbits to 28 Tbits can be set.

16.3.2.7 RLN3nLSC — LIN Space Configuration Register

Access: This register can be read/written in 8-bit units

Address: <RLIN3n_base>+ $0A_H$

Value after reset: 00_H

Bit	7	6	5	4	3	2	1	0
	—	—	IBS[1:0]		—	IBHS[2:0]		
Value after reset	0	0	0	0	0	0	0	0
R/W	R	R	R/W	R/W	R	R/W	R/W	R/W

Table 16.19 RLN3nLSC Register Contents

Bit Position	Bit Name	Function
7, 6	Reserved	When read, the value after reset is read. When writing, write the value after reset.
5, 4	IBS[1:0]	Inter-Byte Space Select b5 b4 0 0: 0 Tbit 0 1: 1 Tbit 1 0: 2 Tbits 1 1: 3 Tbits
3	Reserved	When read, the value after reset is read. When writing, write the value after reset.
2 to 0	IBHS[2:0]	Inter-Byte Space (Header)/Response Space Select b2 b0 0 0 0: 0 Tbit 0 0 1: 1 Tbit 0 1 0: 2 Tbits 0 1 1: 3 Tbits 1 0 0: 4 Tbits 1 0 1: 5 Tbits 1 1 0: 6 Tbits 1 1 1: 7 Tbits

Set the RLN3nLSC register when the OMM0 bit in the RLN3nLMST register is 0_B (in LIN reset mode).

Some combinations of the set values result in the length of a frame or a response exceeding the timeout time. Set the appropriate values in this register.

IBS[1:0] Bits (Inter-Byte Space Select)

The IBS bits set the width of the inter-byte space of the transmission frame response field.
0 Tbit to 3 Tbits can be set.
These bits are enabled only during response transmission; these are disabled during response reception.
For transmission from the transmission data buffer (RLN3nLUTDR register) or the transmission data buffer for wait (RLN3nLUWTDR register), the setting of these bits is ineffective. In this case, set these bits to "00_B".

IBHS[2:0] Bits (Inter-Byte Space (Header)/Response Space Select)

The IBHS bits set the width of the inter-byte space (header) of the transmission frame header field and the response space.
0 Tbit to 7 Tbits can be set.
The response space setting is enabled only during response transmission; setting is disabled during response reception.
The inter-byte space (header) is equal to the response space.

16.3.2.8 RLN3nLWUP — LIN Wake-Up Configuration Register

Access: This register can be read/written in 8-bit units

Address: <RLIN3n_base>+ $0B_H$

Value after reset: 00_H

Bit	7	6	5	4	3	2	1	0
	WUTL[3:0]				—	—	—	—
Value after reset	0	0	0	0	0	0	0	0
R/W	R/W	R/W	R/W	R/W	R	R	R	R

Table 16.20 RLN3nLWUP Register Contents

Bit Position	Bit Name	Function
7 to 4	WUTL[3:0]	Wake-up Transmission Low Level Width Select b7 b4 0 0 0 0: 1 Tbit 0 0 0 1: 2 Tbits 0 0 1 0: 3 Tbits 0 0 1 1: 4 Tbits : 1 1 0 0: 13 Tbits 1 1 0 1: 14 Tbits 1 1 1 0: 15 Tbits 1 1 1 1: 16 Tbits
3 to 0	Reserved	When read, the value after reset is read. When writing, write the value after reset.

Set the RLN3nLWUP register when the OMM0 bit in the RLN3nLMST register is 0_B (in LIN reset mode).

WUTL[3:0] Bits (Wake-up Transmission Low Level Width Select)

The WUTL bits set the low level width of the wake-up signal transmission.
1 Tbit to 16 Tbits can be set.

With 1 is set in the LWBR0 bit in the RLN3nLWBR register (LIN 2.x is used), fa is selected as the LIN system clock (fLIN) regardless of the setting of the RLN3nLMD.LCKS bit (the LCKS bit is not changed).

16.3.2.9 RLN3nLIE — LIN Interrupt Enable Register

Access: This register can be read/written in 8-bit units

Address: <RLIN3n_base> + $0C_H$

Value after reset: 00_H

Bit	7	6	5	4	3	2	1	0
	—	—	—	—	SHIE	ERRIE	FRCIE	FTCIE
Value after reset	0	0	0	0	0	0	0	0
R/W	R	R	R	R	R/W	R/W	R/W	R/W

Table 16.21 RLN3nLIE Register Contents

Bit Position	Bit Name	Function
7 to 4	Reserved	When read, the value after reset is read. When writing, write the value after reset.
3	SHIE	Successful Header Transmission Interrupt Enable 0: Disables successful header transmission interrupt. 1: Enables successful header transmission interrupt.
2	ERRIE	Error Detection Interrupt Enable 0: Disables error detection interrupt. 1: Enables error detection interrupt.
1	FRCIE	Successful Frame/Wake-up Reception Interrupt Enable 0: Disables successful frame/wake-up reception interrupt. 1: Enables successful frame/wake-up reception interrupt.
0	FTCIE	Successful Frame/Wake-up Transmission Interrupt Enable 0: Disables successful frame/wake-up transmission interrupt. 1: Enables successful frame/wake-up transmission interrupt.

Set the RLN3nLIE register when the OMM0 bit in the RLN3nLMST register is 0_B (in LIN reset mode).

SHIE Bit (Successful Header Transmission Interrupt Enable)

The SHIE bit enables or disables interrupt request upon successful transmission of a header.
With 0 set, the interrupt request for RLIN3n transmission is not generated when the HTRC flag in the RLN3nLST register is set to 1.
With 1 set, the interrupt request for RLIN3n transmission is generated when the HTRC flag in the RLN3nLST register is set to 1.

ERRIE Bit (Error Detection Interrupt Enable)

The ERRIE bit enables or disables an interrupt request upon detection of an error.
With 0 set, the interrupt request for RLIN3n status not generated when the ERR flag in the RLN3nLST register is set to 1.
With 1 set, the interrupt request for RLIN3n status is generated when the ERR flag in the RLN3nLST register is set to 1.
Detection of the bit error, physical bus error, frame/response timeout error, and framing error can be enabled or disabled using the RLN3nLEDE register.

FRCIE Bit (Successful Frame/Wake-up Reception Interrupt Enable)

The FRCIE bit enables or disables an interrupt request upon successful reception of a frame or a wake-up signal (counting of low level width of the input signal).
With 0 set, the interrupt request for RLIN3n reception complete is not generated when the FRC flag in the RLN3nLST register is set to 1.
With 1 set, the interrupt request for RLIN3n reception complete is generated when the FRC flag in the RLN3nLST register is set to 1.

FTCIE Bit (Successful Frame/Wake-up Transmission Interrupt Enable)

The FTCIE bit enables or disables an interrupt request upon successful transmission of a frame or a wake-up signal.
With 0 set, the interrupt request for RLIN3n transmission is not generated when the FTC flag in the RLN3nLST register is set to 1.
With 1 set, the interrupt request for RLIN3n transmission is generated when the FTC flag in the RLN3nLST register is set to 1.

16.3.2.10 RLN3nLEDE — LIN Error Detection Enable Register

Access: This register can be read/written in 8-bit units

Address: <RLIN3n_base> + $0D_H$

Value after reset: 00_H

Bit	7	6	5	4	3	2	1	0
	LTES	—	—	—	FERE	FTERE	PBERE	BERE
Value after reset	0	0	0	0	0	0	0	0
R/W	R/W	R	R	R	R/W	R/W	R/W	R/W

Table 16.22 RLN3nLEDE Register Contents

Bit Position	Bit Name	Function
7	LTES	Timeout Error Select 0: Frame timeout error 1: Response timeout error
6 to 4	Reserved	When read, the value after reset is read. When writing, write the value after reset.
3	FERE	Framing Error Detection Enable 0: Disables framing error detection. 1: Enables framing error detection.
2	FTERE	Timeout Error Detection Enable 0: Disables frame/response timeout error detection. 1: Enables frame/response timeout error detection.
1	PBERE	Physical Bus Error Detection Enable 0: Disables physical bus error detection. 1: Enables physical bus error detection.
0	BERE	Bit Error Detection Enable 0: Disables bit error detection. 1: Enables bit error detection.

Set the RLN3nLEDE register when the OMM0 bit in the RLN3nLMST register is 0_B (in LIN reset mode)

LTES Bit (Timeout Error Select)

The LTES bit selects the timeout function to be used.
With 0 set, the timeout function applies to frame timeout.
With 1 set, the timeout function applies to response timeout.
For details on the timeout error, see **Section 16.7.6, Error Status**.

FERE Bit (Framing Error Detection Enable)

The FERE bit enables or disables detection of the framing error.
With 0 set, the framing error is not detected.
With 1 set, the framing error is detected.
When this bit is set to 1, the detection result is indicated in the FER flag in the RLN3nLEST register.
For details on the framing error, see **Section 16.7.6, Error Status**.

FTERE Bit (Timeout Error Detection Enable)

The FTERE bit enables or disables detection of the frame timeout error or the response timeout error.
With 0 set, the frame timeout error or response timeout error is not detected.
With 1 set, the frame timeout error or response timeout error is detected.
When this bit is set to 1, the detection result is indicated in the FTER flag in the RLN3nLEST register.
With the LTES bit, either the frame timeout error or response timeout error can be selected.
Do not use the timeout error if response data of 9 bytes or more is to be transmitted or received.
For details on the timeout error, see **Section 16.7.6, Error Status**.

PBERE Bit (Physical Bus Error Detection Enable)

The PBERE bit enables or disables detection of the physical bus error.
With 0 set, the physical bus error is not detected.
With 1 set, the physical bus error is detected.
When this bit is set to 1, the detection result is indicated in the PBER flag in the RLN3nLEST register.
For details on the physical bus error, see **Section 16.7.6, Error Status**.

BERE Bit (Bit Error Detection Enable)

The BERE bit enables or disables detection of the bit error.
With 0 set, the bit error is not detected.
With 1 set, the bit error is detected.
When this bit is set to 1, the detection result is indicated in the BER flag in the RLN3nLEST register.
For details on the bit error, see **Section 16.7.6, Error Status**.

16.3.2.11 RLN3nLCUC — LIN Control Register

Access: This register can be read/written in 8-bit units

Address: <RLIN3n_base> + $0E_H$

Value after reset: 00_H

Bit	7	6	5	4	3	2	1	0
	—	—	—	—	—	—	OM1	OM0
Value after reset	0	0	0	0	0	0	0	0
R/W	R	R	R	R	R	R	R/W	R/W

Table 16.23 RLN3nLCUC Register Contents

Bit Position	Bit Name	Function
7 to 2	Reserved	When read, the value after reset is read. When writing, write the value after reset.
1	OM1	LIN Mode Select 0: LIN wake-up mode 1: LIN operation mode
0	OM0	LIN Reset 0: LIN reset mode 1: Release from LIN reset mode

Set the RLN3nLCUC register to 01_H to cause a transition to LIN wake-up mode after canceling LIN reset mode, and set the register to 03_H to cause a transition to LIN operation mode.

In LIN self-test mode, set the RLN3nLCUC register to 03_H after a transition to LIN self-test mode is completed.

After a value is written to this register, confirm that the value written is actually indicated in the RLN3nLMST register before writing another value.

OM1 Bit (LIN Mode Select)

The OM1 bit selects the specific operation mode (either LIN wake-up mode or LIN operation mode) after canceling LIN reset mode.
Setting this bit to 0 causes a transition to LIN wake-up mode.
Setting it to 1 leads to release from LIN operation mode.
This bit is valid only when the OMM0 bit in the RLN3nLMST register is 1.
Writing a value to this bit is disabled while the FTS bit in the RLN3nLTRC register is 1.

OM0 Bit (LIN Reset)

The OM0 bit selects either causing a transition to LIN reset mode or canceling LIN reset mode.
Setting this bit to 0 causes a transition to LIN reset mode.
Setting it to 1 leads to release from LIN reset mode.

16.3.2.12 RLN3nLTRC — LIN Transmission Control Register

Access: This register can be read/written in 8-bit units

Address: <RLIN3n_base> + 10_H

Value after reset: 00_H

Bit	7	6	5	4	3	2	1	0
	—	—	—	—	—	—	RTS	FTS
Value after reset	0	0	0	0	0	0	0	0
R/W	R	R	R	R	R	R	R/W	R/W

Table 16.24 RLN3nLTRC Register Contents

Bit Position	Bit Name	Function
7 to 2	Reserved	When read, the value after reset is read. When writing, write the value after reset.
1	RTS	Response Transmission/Reception Start 0: Response transmission/reception is stopped in frame separate mode. 1: Response transmission/reception is started in frame separate mode.
0	FTS	Frame Transmission/Wake-up Transmission /Reception Start 0: Frame Transmission/wake-up transmission/reception is stopped. 1: Frame Transmission/wake-up transmission reception is started.

RTS Bit (Response Transmission/Reception Start)

Set the RTS bit to 1 in frame separate mode after header transmission is started (FTS bit is 1) and response transmission data is ready. Once set, this bit is automatically cleared to 0 upon completion of frame communication (including error detection) or transition to LIN reset mode.
Only 1 can be written to this bit; 0 cannot be written.
To write 1 to this bit, write 02_H to the RLN3nLTRC register using the store instruction.
Writing a value to this bit is disabled when the OMM0 bit of the RLN3nLMST register is 0_B (in LIN reset mode).
Writing a value to this bit is disabled when the FTS bit is 0 (frame transmission or wake-up transmission/reception is halted).
When response data of 9 bytes or more is to be transmitted or received, set this bit to 1 each time a data group (variable from 0 to 8 bytes) is transmitted or received. Once set, this bit is automatically cleared to 0 at the end of communication or transition to LIN reset mode.

FTS Bit (Frame Transmission/Wake-up Transmission/Reception Start)

Set the FTS bit to 1 to start frame transmission.
Also set this bit to 1 to allow wake-up transmission and reception (counting of the low level width of the input signal).
Only 1 can be written to this bit; 0 cannot be written.
Writing a value to this bit is disabled when the OMM0 bit of the RLN3nLMST register is 0_B (in LIN reset mode).

This bit is set to 0 upon error detection of frame or wake-up communication (including error detection) and transition to LIN reset mode.

16.3.2.13 RLN3nLMST — LIN Mode Status Register

Access: This register can only be read in 8-bit units

Address: <RLIN3n_base> + 11_H

Value after reset: 00_H

Bit	7	6	5	4	3	2	1	0
	—	—	—	—	—	—	OMM1	OMM0
Value after reset	0	0	0	0	0	0	0	0
R/W	R	R	R	R	R	R	R	R

Table 16.25 RLN3nLMST Register Contents

Bit Position	Bit Name	Function
7 to 2	Reserved	When read, the value after reset is read.
1	OMM1	LIN Mode Status Monitor 0: The module is in LIN wake-up mode. 1: The module is in LIN operation mode.
0	OMM0	LIN Reset Status Monitor 0: The module is in LIN reset mode. 1: The module is not in LIN reset mode.

OMM1 Bit (LIN Mode Status Monitor)

The OMM1 bit indicates the current operating mode.

OMM0 Bit (LIN Reset Status Monitor)

The OMM0 bit indicates the current operating mode.

16.3.2.14 RLN3nLST — LIN Status Register

Access: This register can be read/written in 8-bit units

Address: <RLIN3n_base> + 12_H

Value after reset: 00_H

Bit	7	6	5	4	3	2	1	0
	HTRC	D1RC	—	—	ERR	—	FRC	FTC
Value after reset	0	0	0	0	0	0	0	0
R/W	R/W	R/W	R	R	R	R	R/W	R/W

Table 16.26 RLN3nLST Register Contents

Bit Position	Bit Name	Function
7	HTRC	Successful Header Transmission Flag 0: Header transmission has not been completed. 1: Header transmission has been completed.
6	D1RC	Successful Data 1 Reception Flag 0: Data 1 reception has not been completed. 1: Data 1 reception has been completed.
5, 4	Reserved	When read, the value after reset is read. When writing, write the value after reset.
3	ERR	Error Detection Flag 0: No error has been detected. 1: Error has been detected.
2	Reserved	When read, the value after reset is read. When writing, write the value after reset.
1	FRC	Frame/Wake-up Reception Complete Flag 0: Frame or wake-up reception has not been completed. 1: Frame or wake-up reception has been completed.
0	FTC	Frame/Wake-up Transmission Complete Flag 0: Frame or wake-up transmission has not been completed. 1: Frame or wake-up transmission has been completed.

The RLN3nLST register is automatically cleared to 00_H upon transition to LIN reset mode and start of the next communication (when the FTS bit of the RLN3nLTRC register is 1).

In LIN reset mode, this register cannot be written to. In LIN reset mode, the register retains 00_H.

To clear the specific bits in the register, write 0 to the bits to be cleared and write 1 to the other bits using the store instruction.

HTRC Flag (Successful Header Transmission Flag)

Only 0 can be written to the HTRC flag; when 1 is written, the bit retains the value that has been retained before 1 is written.
The HTRC flag is set to 1 upon completion of header transmission. Here, an interrupt request for RLIN3n transmission is generated if the SHIE bit in the RLN3nLIE register is 1 (interrupt is enabled). To clear the bit to 0 before the next communication (when the FTS bit of the RLN3nLTRC register is 1), write 0 to the bit in LIN operation mode.

D1RC Flag (Successful Data 1 Reception Flag)

Only 0 can be written to the D1RC flag; when 1 is written, the bit retains the value that has been retained before 1 is written.
The D1RC flag is set to 1 upon completion of data 1 reception. Here, an interrupt request is not generated. Here, an interrupt is not generated. To clear the bit to 0 before the next communication

(when the FTS bit of the RLN3nLTRC register is 1), write 0 to the bit in LIN operation mode.
When response data of 9 bytes or more is to be received, this bit is set to 1 each time data 1 of a data group (variable from 0 to 8 bytes) is received. Write 0 before starting reception of the next data group.

ERR Flag (Error Detection Flag)

The ERR flag is set to 1 upon detection of an error (when the value of at least one of the flags of the RLN3nLEST register is set to 1). Here, an interrupt request for RLIN3n status is generated if the ERRIE bit in the RLN3nLIE register is 1 (interrupt is enabled). To clear the bit to 0 before the next communication (when the FTS bit of the RLN3nLTRC register is 1), write 0 to the RPER, CSER, FER, FTER, PBER, and BER flags in the RLN3nLEST register in LIN operation mode or LIN wake-up mode. This clears the ERR flag to 0.

FRC Flag (Frame/Wake-up Reception Complete Flag)

Only 0 can be written to the FRC flag; when 1 is written, the bit retains the value that has been retained before 1 is written.
The FRC flag is set to 1 upon completion of frame or wake-up reception. Here, an interrupt request for RLIN3n reception complete is generated if the FRCIE bit in the RLN3nLIE register is 1 (interrupt is enabled). To clear the bit to 0 before the next communication (when the FTS bit of the RLN3nLTRC register is 1), write 0 to the bit in LIN operation mode or LIN wake-up mode.
When response data of 9 bytes or more is to be received, this bit is set to 1 each time a data group (variable from 0 to 8 bytes) is received. Write 0 before starting reception of the next data group.

FTC Flag (Frame/Wake-up Transmission Complete Flag)

Only 0 can be written to the FTC flag; when 1 is written, the bit retains the value that has been retained before 1 is written.
The FTC flag is set to 1 upon completion of frame or wake-up transmission. Here, an interrupt request for RLIN3n transmission is generated if the FTCIE bit in the RLN3nLIE register is 1 (interrupt is enabled). To clear the bit to 0 before the next communication (when the FTS bit of the RLN3nLTRC register is 1), write 0 to the bit in LIN operation mode or LIN wake-up mode.
When response data of 9 bytes or more is to be transmitted, this bit is set to 1 each time a data group (variable from 0 to 8 bytes) is transmitted. Write 0 before starting transmission of the next data group.

16.3.2.15 RLN3nLEST — LIN Error Status Register

Access: This register can be read/written in 8-bit units

Address: <RLIN3n_base> + 13_H

Value after reset: 00_H

Bit	7	6	5	4	3	2	1	0
	RPER	—	CSER	—	FER	FTER	PBER	BER
Value after reset	0	0	0	0	0	0	0	0
R/W	R/W	R	R/W	R	R/W	R/W	R/W	R/W

Table 16.27 RLN3nLEST Register Contents

Bit Position	Bit Name	Function
7	RPER	Response Preparation Error Flag 0: Response preparation error has not been detected. 1: Response preparation error has been detected.
6	Reserved	When read, the value after reset is read. When writing, write the value after reset.
5	CSER	Checksum Error Flag 0: Checksum error has not been detected. 1: checksum error has been detected.
4	Reserved	When read, the value after reset is read. When writing, write the value after reset.
3	FER	Framing Error Flag 0: Framing error has not been detected. 1: Framing error has been detected.
2	FTER	Timeout Error Flag 0: Frame/response timeout error has not been detected. 1: Frame/response timeout error has been detected.
1	PBER	Physical Bus Error Flag 0: Physical bus error has not been detected. 1: Physical bus error has been detected.
0	BER	Bit Error Flag 0: Bit error has not been detected. 1: Bit error has been detected.

The RLN3nLEST register is automatically cleared to 00_H upon transition to LIN reset mode and start of the next communication (when the FTS bit of the RLN3nLTRC register is 1).

In LIN reset mode, this register cannot be written to. In LIN reset mode, the register retains 00_H.

When the FTS bit in the RLN3nLTRC register is 1 (frame transmission or wake-up transmission/ reception is started), do not write a value to this register.

To clear the specific bits in the register, write 0 to the bits to be cleared and write 1 to the other bits using the store instruction.

RPER Flag (Response Preparation Error Flag)

Only 0 can be written to the RPER flag; when 1 is written, the bit retains the value that has been retained before 1 is written.
The RPER flag is set to 1 upon response preparation error detection. To clear the bit to 0 before the next communication (when the FTS bit of the RLN3nLTRC register is 1), write 0 to the bit in LIN operation mode.

CSER Flag (Checksum Error Flag)

Only 0 can be written to the CSER flag; when 1 is written, the bit retains the value that has been retained before 1 is written.
The CSER flag is set to 1 upon checksum error detection. To clear the bit to 0 before the next communication (when the FTS bit of the RLN3nLTRC register is 1), write 0 to the bit in LIN operation mode.

FER Flag (Framing Error Flag)

Only 0 can be written to the FER flag; when 1 is written, the bit retains the value that has been retained before 1 is written.
When the value of the FERE bit of the RLN3nLEDE register is 1 (framing error detection enabled), the FER flag is set to 1 upon framing error detection. To clear the bit to 0 before the next communication (when the FTS bit of the RLN3nLTRC register is 1), write 0 to the bit in LIN operation mode.

FTER Flag (Timeout Error Flag)

Only 0 can be written to the FTER flag; when 1 is written, the bit retains the value that has been retained before 1 is written.
When the FTERE bit of the RLN3nLEDE register is 1 (frame/response timeout error detection enabled), the FTER flag is set to 1 upon frame timeout error or response timeout error detection. To clear the bit to 0 before the next communication (when the FTS bit of the RLN3nLTRC register is 1), write 0 to the bit in LIN operation mode.

PBER Flag (Physical Bus Error Flag)

Only 0 can be written to the PBER flag; when 1 is written, the bit retains the value that has been retained before 1 is written.
When the PBERE bit of the RLN3nLEDE register is 1 (physical bus error detection enabled), the PBER flag is set to 1 upon physical bus error detection. To clear the bit to 0 before the next communication (when the FTS bit of the RLN3nLTRC register is 1), write 0 to the bit in LIN operation mode or LIN wake-up mode.

BER Flag (Bit Error Flag)

Only 0 can be written to the BER flag; when 1 is written, the bit retains the value that has been retained before 1 is written.
When the BERE bit of the RLN3nLEDE register is 1 (bit error detection enabled), the BER flag is set to 1 upon bit error detection. To clear the bit to 0 before the next communication (when the FTS bit of the RLN3nLTRC register is 1), write 0 to the bit in LIN operation mode or LIN wake-up mode.

16.3.2.16 RLN3nLDFC — LIN Data Field Configuration Register

Access: This register can be read/written in 8-bit units.

Address: <RLIN3n_base> + 14_H

Value after reset: 00_H

Bit	7	6	5	4	3	2	1	0
	LSS	FSM	CSM	RFT	RFDL[3:0]			
Value after reset	0	0	0	0	0	0	0	0
R/W	R/W	R/W	R/W	R/W	R/W	R/W	R/W	R/W

Table 16.28 RLN3nLDFC Register Contents

Bit Position	Bit Name	Function
7	LSS	Transmission/Reception Continuation Select 0: The data group to be transmitted/received next is the last one. 1: The data group to be transmitted/received next is not the last one. (Checksum is not included.)
6	FSM	Frame Separate Mode Select 0: Frame separate mode is not set. 1: Frame separate mode is set.
5	CSM	Checksum Select 0: Classic checksum mode 1: Enhanced checksum mode
4	RFT	Response Field Communication Direction Select 0: Reception 1: Transmission
3 to 0	RFDL[3:0]	Response Field Length Select b3 b0 0 0 0 0: 0 byte (+ checksum) 0 0 0 1: 1 byte (+ checksum) 0 0 1 0: 2 bytes (+ checksum) : 0 1 1 1: 7 bytes (+ checksum) 1 0 0 0: 8 bytes (+ checksum) Settings other than the above are prohibited.

LSS Bit (Transmission/Reception Continuation Select)

The LSS bit indicates that the data group to be transmitted or received next is not the last data group when response data of 9 bytes or more is to be transmitted or received.
With 0 set, data and checksum are transmitted or received because the next data group to be transmitted or received is the last one.
With 1 set, only data is transmitted or received, and the checksum is not included because the next data group to be transmitted or received is not the last one.
Set the LSS bit only when the FSM bit is 1 (frame separate mode) and response data of 9 bytes or more is to be transmitted or received.

Set the LSS bit only when the RTS bit in the RLN3nLTRC is 0 (response transmit/receive is stopped).

FSM Bit (Frame Separate Mode Select)

The FSM bit sets the response communication mode.
With 0 set, frame separate mode is not selected. In this case, after header transmission is started (the FTS bit in the RLN3nLTRC register is 1), response is transmitted/received without the RTS bit in the RLN3nLTRC register being set.

With 1 set, frame separate mode is selected. If the RTS bit of the RLN3nLTRC register is set to 1 during header transmission, response transmission is executed after header transmission is completed.

For response reception which is 8 bytes or less (the RFT bit is 0), set the FSM bit to 0.
When causing a transition to LIN self-test mode, set this bit to 0 before transition.
For details on frame separate mode, see **Section 16.7.3.1, Transmission of LIN Frames**.
Set this bit when the FTS bit in the RLN3nLTRC register is 0 (frame transmission or wake-up transmission/reception is halted).
When response data of 9 bytes or more is to be transmitted or received, set the FSM bit to 1.

CSM Bit (Checksum Select)

The CSM bit sets the checksum mode.
With 0 set, classic checksum mode is selected.
With 1 set, enhanced checksum mode is selected.
When the timeout error is used (the FTERE bit in the RLN3nLEDE register is 1), the specific timeout time depends on the setting of this bit. For details on the bit error, see **Section 16.7.6, Error Status**.
Set this bit when the FTS bit in the RLN3nLTRC register is 0 (frame transmission or wake-up transmission/reception is halted).
When response data of 9 bytes or more is to be transmitted or received, do not change the CSM bit setting after the first data group through the last data group.
During communication of response data of 9 bytes or more, only the last data group (the LSS bit is 0) includes the checksum, and no other groups (the LSS bit is 1) include the checksum.

RFT Bit (Response Field Communication Direction Select)

The RFT bits set the direction of the response field/wake-up signal communication.
With 0 set, reception is performed in the response field. In LIN wake-up mode, wake-up reception is performed (low level width of the input signal is counted).
With 1 set, transmission is performed in the response field. In LIN wake-up mode, wake-up transmission is performed.
Set this bit when the FTS bit in the RLN3nLTRC register is 0 (frame transmission or wake-up transmission/reception is halted).
When response data of 9 bytes or more is to be transmitted or received, do not change the RFT bit setting after the first data group through the last data group.

RFDL[3:0] Bits (Response Field Length Select)

The RFDL bits set the length of the response field data.
The data length can be 0 to 8 bytes excluding the checksum size.
To transmit response data with the FSM bit set to 0 (not frame separate mode), set the RFDL bits before header transmission (the FTS bit in the RLN3nLTRC register is 0).
To transmit response data with the FSM bit set to 1 (frame separate mode), set the RFDL bits before response transmission (the RTS bit in the RLN3nLTRC register is 0).
To receive response data, set the RFDL bits before header transmission (the FTS bit in the RLN3nLTRC register is 0).
When response data of 9 bytes or more is to be transmitted or received, set the RFDL bits before data group transmission/reception (RTS bit in the RLN3nLTRC register is 0).
Only the last data group (the LSS bit is 0) includes the checksum, and no other groups (the LSS bit is 1) include the checksum.

16.3.2.17 RLN3nLIDB — LIN ID Buffer Register

Access: This register can be read/written in 8-bit units

Address: <RLIN3n_base> + 15_H

Value after reset: 00_H

Bit	7	6	5	4	3	2	1	0
	IDP1	IDP0	ID[5:0]					
Value after reset	0	0	0	0	0	0	0	0
R/W	R/W	R/W	R/W	R/W	R/W	R/W	R/W	R/W

Table 16.29 RLN3nLIDB Register Contents

Bit Position	Bit Name	Function
7	IDP1	Parity Setting (P1) Sets the parity bits (P1) to be transmitted in the ID field.
6	IDP0	Parity Setting (P0) Sets the parity bits (P0) to be transmitted in the ID field.
5 to 0	ID[5:0]	ID Setting Sets the 6-bit ID value to be transmitted in the ID field.

Set the RLN3nLIDB register when the FTS bit in the RLN3nLTRC register is 0 (frame transmission or wake-up transmission/reception is halted).

In LIN self-test mode, this register operates as described below.

Write the value to be transmitted before communication. After completion of frame transmission/reception (after loopback), the reversed value of the received value can be read.

For details about the LIN self-test mode, see **Section 16.9, LIN Self-Test Mode**.

IDP[1:0] Bits (Parity Setting)

The IDP bits set the parity bits (P0 and P1) to be transmitted in the ID field of the LIN frame. IDP0 for P0 and IDP1 for P1.

Since parity is not automatically calculated, set the calculation result. Note that if the erroneous result is set, it is transmitted as is.

ID[5:0] Bits (ID Setting)

The ID bit sets the 6-bit ID value to be transmitted in the ID field of the LIN frame.

16.3.2.18 RLN3nLCBR — LIN Checksum Buffer Register

Access: This register can only be read in 8-bit units. In LIN self-test mode, this register can be read/written in 8-bit units.

Address: <RLIN3n_base> + 16_H

Value after reset: 00_H

Bit	7	6	5	4	3	2	1	0
	CKSM[7:0]							
Value after reset	0	0	0	0	0	0	0	0
R/W	R/W	R/W	R/W	R/W	R/W	R/W	R/W	R/W

Table 16.30 RLN3nLCBR Register Contents

Bit Position	Bit Name	Function
7 to 0	CKSM[7:0]	Holds the checksum value transmitted or received.

In LIN mode, this register operates as follows:

- When the RFT bit in the RLN3nLDFC register is 1 (transmission):
  The value transmitted can be read from the register. Read the value after transmission is completed.
  Writing to this register is invalid.
- When the RFT bit in the RLN3nLDFC register is 0 (reception):
  The value received can be read from the register. Read the value after reception is completed.
  Writing to this register is invalid.

In LIN self-test mode, this register operates as follows:

- When the RFT bit in the RLN3nLDFC register is 1 (transmission):
  After completion of the frame transmission (after loopback), the reversed value of the received value can be read.
- When the RFT bit in the RLN3nLDFC register is 0 (reception):
  Write the value to be received before communication. After completion of frame transmission/reception (after loopback), the reversed value of the received value can be read.

For details about the LIN self-test mode, see **Section 16.9, LIN Self-Test Mode**.

Set the RLN3nLCBR register when the FTS bit in the RLN3nLTRC register is 0 (frame transmission or wake-up transmission/reception is halted).

When response data of 9 bytes or more is to be transmitted or received, the checksum is appended only to the last data group; this register is not updated for the other data groups.

16.3.2.19 RLN3nLDBRb — LIN Data Buffer b Register (b = 1 to 8)

Access: This register can be read/written in 8-bit units.

Address: RLN3nLDBR1: <RLIN3n_base> + 18_H
RLN3nLDBR2: <RLIN3n_base> + 19_H
RLN3nLDBR3: <RLIN3n_base> + $1A_H$
RLN3nLDBR4: <RLIN3n_base> + $1B_H$
RLN3nLDBR5: <RLIN3n_base> + $1C_H$
RLN3nLDBR6: <RLIN3n_base> + $1D_H$
RLN3nLDBR7: <RLIN3n_base> + $1E_H$
RLN3nLDBR8: <RLIN3n_base> + $1F_H$

Value after reset: 00_H

Bit	7	6	5	4	3	2	1	0
	LDB[7:0]							
Value after reset	0	0	0	0	0	0	0	0
R/W	R/W	R/W	R/W	R/W	R/W	R/W	R/W	R/W

Table 16.31 RLN3nLDBRb Register Contents

Bit Position	Bit Name	Function
7 to 0	LDB[7:0]	Sets the data to be transmitted or allows the received data to be read. Setting range: 00_H to FF_H

- For response transmission:
  The LDBRn registers set the data to be transmitted in the response field.
  Use these registers with the following settings.
  - RFT in RLN3nLDFC register is 1 (transmission)
  - FSM in RLN3nLDFC register is 0 (not frame separate mode)
  - FTS bit in RLN3nLTRC register is 0 (frame transmission or wake-up transmission/reception is halted)

  or
  - RFT in RLN3nLDFC register is 1 (transmission)
  - FSM in RLN3nLDFC register is 1 (frame separate mode)
  - RTS in RLN3nLTRC register is 0 (response transmission/reception is halted)
- For response reception:
  The LDBRn registers hold the data received in the response field.
  The received data is overwritten. If an error is detected, the data up to the byte in which the error was detected are stored in the register.
  Do not read these registers when the FTS bit is 1 (frame transmission or wake-up transmission/reception is started)
- For transmission of response data of 9 bytes or more:
  Use the LDBRn registers with the following settings.
  - RFT in RLN3nLDFC register is 1 (transmission)
  - FSM in RLN3nLDFC register is 1 (frame separate mode)
  - RTS in RLN3nLTRC register is 0 (response transmission/reception is halted)
- For reception of response data of 9 bytes or more:
  Do not read these registers when the RTS bit is 1 (response transmission/reception is started).

In LIN self-test mode, these registers operate as described below.

Write the value to be transmitted before communication. After completion of frame transmission/reception (after loopback), the reversed value of the received value can be read.

For details about the LIN self-test mode, see **Section 16.9, LIN Self-Test Mode**.

16.3.3 UART Related Registers

16.3.3.1 RLN3nLWBR — LIN Wake-Up Baud Rate Select Register

Access: This register can be read/written in 8-bit units

Address: <RLIN3n_base> + 01_H

Value after reset: 00_H

Bit	7	6	5	4	3	2	1	0
	NSPB[3:0]				LPRS[2:0]			—
Value after reset	0	0	0	0	0	0	0	0
R/W	R/W	R/W	R/W	R/W	R/W	R/W	R/W	R

Table 16.32 RLN3nLWBR Register Contents

Bit Position	Bit Name	Function
7 to 4	NSPB[3:0]	Bit Sampling Count Select b7 b4 0 0 0 0: 16 sampling 0 1 0 1: 6 sampling 0 1 1 0: 7 sampling 0 1 1 1: 8 sampling 1 0 0 0: 9 sampling 1 0 0 1: 10 sampling 1 0 1 0: 11 sampling 1 0 1 1: 12 sampling 1 1 0 0: 13 sampling 1 1 0 1: 14 sampling 1 1 1 0: 15 sampling 1 1 1 1: 16 sampling Settings other than the above are prohibited.
3 to 1	LPRS[2:0]	Prescaler Clock Select b3 b1 0 0 0: 1/1 0 0 1: 1/2 0 1 0: 1/4 0 1 1: 1/8 1 0 0: 1/16 1 0 1: 1/32 1 1 0: 1/64 1 1 1: 1/128
0	Reserved	When read, the value after reset is read. When writing, write the value after reset.

Set the LN3nLWBR register when the OMM0 bit in the RLN3nLMST register is 0_B (in LIN reset mode).

NSPB[3:0] Bits (Bit Sampling Count Select)

The NSPB bits select the number of sampling in one Tbit (reciprocal of the bit rate).
In UART mode, it is possible to set the NSPB bits from 6 sampling to 16 sampling.

LPRS[2:0] Bits (Prescaler Clock Select)

The LPRS bits select the frequency division ratio for the prescaler.

The LIN communication clock source is divided by this prescaler.

16.3.3.2 RLN3nLBRP01 — UART Baud Rate Prescaler 01 Register

Access: RLN3nLBRP01 register can be read/written in 16-bit units.
RLN3nLBRP0 register can be read/written in 8-bit units.
RLN3nLBRP1 register can be read/written in 8-bit units.

Address: RLN3nLBRP01: <RLIN3n_base> + 02_H
RLN3nLBRP0: <RLIN3n_base> + 02_H
RLN3nLBRP1: <RLIN3n_base> + 03_H

Value after reset: 0000_H

Bit	15	14	13	12	11	10	9	8	7	6	5	4	3	2	1	0
	BRP[15:0]															
Value after reset	0	0	0	0	0	0	0	0	0	0	0	0	0	0	0	0
R/W	R/W	R/W	R/W	R/W	R/W	R/W	R/W	R/W	R/W	R/W	R/W	R/W	R/W	R/W	R/W	R/W

Table 16.33 RLN3nLBRP01 Register Contents

Bit Position	Bit Name	Function
15 to 0	LBRP0[15:0]	Assuming that the value set in this register is L (0 to 65535), the baud rate prescaler divides the frequency of the prescaler clock by L + 1. Setting range: 0000_H to $FFFF_H$

Set the RLN3nLBRP01 register when the OMM0 bit in the RLN3nLMST register is 0_B (in LIN reset mode).

Assuming that the value set in this register is L, the baud rate prescaler divides the frequency of the clock that is selected by the LPRS bits (prescaler clock select bits) in the RLN3nLWBR register by L + 1.

The RLN3nLBRP01 register can be accessed in 8-bit units by the registers RLN3nLBRP0 and RLN3nLBRP1.

16.3.3.3 RLN3nLMD — UART Mode Register

Access: This register can be read/written in 8-bit units

Address: <RLIN3n_base> + 08_H

Value after reset: 00_H

Bit	7	6	5	4	3	2	1	0
	—	—	LRDNFS	—	—	—	LMD[1:0]	
Value after reset	0	0	0	0	0	0	0	0
R/W	R	R	R/W	R	R	R	R/W	R/W

Table 16.34 RLN3nLMD Register Contents

Bit Position	Bit Name	Function
7, 6	Reserved	When read, the value after reset is read. When writing, write the value after reset.
5	LRDNFS	UART Reception Data Noise Filtering Disable 0: The noise filter is enabled. 1: The noise filter is disabled.
4 to 2	Reserved	When read, the value after reset is read. When writing, write the value after reset.
1, 0	LMD[1:0]	LIN/UART Mode Select b1 b0 0 1: UART mode

Set the RLN3nLMD register when the OMM0 bit in the RLN3nLMST register is 0_B (in LIN reset mode).

LRDNFS Bit (UART Reception Data Noise Filtering Disable)

The LRDNFS bit enables or disables the noise filter when receiving data.
With 0 set, the noise filter is enabled when receiving data.
With 1 set, the noise filter is disabled when receiving data.

LMD[1:0] Bits (LIN/UART Mode Select)

The LMD bits select the LIN/UART interface mode.
To use the LIN/UART interface as an UART, set these bits to 01_B.

16.3.3.4 RLN3nLBFC — UART Configuration Register

Access: This register can be read/written in 8-bit units

Address: <RLIN3n_base> + 09_H

Value after reset: 00_H

Bit	7	6	5	4	3	2	1	0
	—	UTPS	URPS	UPS[1:0]		USBLS	UBOS	UBLS
Value after reset	0	0	0	0	0	0	0	0
R/W	R	R/W	R/W	R/W	R/W	R/W	R/W	R/W

Table 16.35 RLN3nLBFC Register Contents

Bit Position	Bit Name	Function
7	Reserved	When read, the value after reset is read. When writing, write the value after reset.
6	UTPS	UART Output Polarity Switch 0: Transmit data normal output 1: Transmit data with inversion output
5	URPS	UART Input Polarity Switch 0: Reception data normal output 1: Reception data with inversion output
4, 3	UPS[1:0]	UART Parity Select 00: Parity prohibited 01: Even Parity 10: 0 Parity 11: Odd parity
2	USBLS	UART Stop Bit length Select 0: Stop bit:1 bit 1: Stop bit: 2 bits
1	UBOS	UART Transfer Format Order Select 0: LSB First 1: MSB First
0	UBLS	UART Character Length Select 0: UART 8 bits communication 1: UART 7 bits communication

Set the RLN3nLBFC register when the OMM0 bit in the RLN3nLMST register is 0_B (in LIN reset mode).

UTPS Bit (UART Output Polarity Switch)

Sets the output polarity for UART communication.
With 0 set, transmit data is output without inversion.
With 1 set, receive data is output with inversion.
The setting of this bit is valid in all the bits of the UART frame.
In half-duplex communication, this setting should match with the setting of URPS bit.

URPS Bit (UART Input Polarity Switch)

Sets the input polarity for UART communication.
With 0 set, receive data is input without inversion.
With 1 set, receive data is input with inversion.
The setting of this bit is valid in all the bits of the UART frame.
In half-duplex communication, this setting should match with the setting of UTPS bit.
When setting this bit to “1” and expansion bit reception ((with expansion bit comparison) or (with data

comparison)) is performed, set the UEBDL bit in the RLN3nLUOR1 register and RLN3nLIDB register to the inverses of the expected values for comparison of the inverses of the received values.

UPS[1:0] Bits (UART Parity Select)

Sets the UART parity.

- When these bits are set to “00_B”, data is communicated without the parity.

  [Transmission]

  A parity bit is not added to transmit data.

  [Reception]

  Data is received without parity processing. Therefore, a parity error does not occur.

- When these bits are set to “01”, data is communicated with the even parity.

  [Transmission]

  If the number of 1s in transmit data is odd, “1” is added to the parity bit. If the number of 1s in transmit data is even, “0” is added to the parity bit.

  [Reception]

  If the number of 1s in receive data including the parity bit is odd, a parity error occurs.

- When these bits are set to “10”, data is communicated with 0 parity.

  [Transmission]

  Regardless of the number 1s in transmit data, “0” is added to the parity bit.

  [Reception]

  The value of the parity bit is not judged. Therefore, no parity error occurs.

- When these bits are set to “11”, data is communicated with the odd parity.

  [Transmission]

  If the number of 1s in transmit data is odd, “0” is added to the parity bit. If the number of 1s in transmit data is even, “1” is added to the parity bit.

  [Reception]

  If the number of 1s in receive data including the parity bit is even, a parity error occurs.

USBLS Bit (UART Stop Bit Length Select)

Sets the stop bit length of data for UART communication.
With 0 set, stop bit length of 1 bit is selected.
With 1 set, stop bit length of 2 bits is selected.

UBOS Bit (UART Transfer Format Select)

Sets the bit order of data for UART communication.
With 0 set, LSB first is selected.
With 1 set, MSB first is selected.

UBLS Bit (UART Character Length Select)

Sets the character length of one frame for UART communication.
With 0 set, the character length is 8 bits.
With 1 set, the character length is 7 bits.
When the character length of one frame is 9 bits (the UEBE bit in the RLN3nLUOR1 register is 1), the setting of this bit is ignored.

16.3.3.5 RLN3nLSC — UART Space Configuration Register

Access: This register can be read/written in 8-bit units
Address: <RLIN3n_base> + $0A_H$
Value after reset: 00_H

Bit	7	6	5	4	3	2	1	0
	—	—	IBS[1:0]		—	—	—	—
Value after reset	0	0	0	0	0	0	0	0
R/W	R	R	R/W	R/W	R	R	R	R

Table 16.36 RLN3nLSC Register Contents

Bit Position	Bit Name	Function
7, 6	Reserved	When read, the value after reset is read. When writing, write the value after reset.
5, 4	IBS[1:0]	Inter-Byte Space Select b5 b4 0 0: 0 Tbit 0 1: 1 Tbit 1 0: 2 Tbits 1 1: 3 Tbits
3 to 0	Reserved	When read, the value after reset is read. When writing, write the value after reset.

Set the RLN3nLSC register when the OMM0 bit in the RLN3nLMST register is 0_B (in LIN reset mode).

IBS[1:0] Bits (Inter-Byte Space Select)

The IBS bits set the width of the space between the UART frame in UART buffer transmit
0 Tbit to 3 Tbits can be set.

16.3.3.6 RLN3nLEDE —UART Error Detection Enable Register

Access: This register can be read/written in 8-bit units

Address: <RLIN3n_base> + $0D_H$

Value after reset: 00_H

Bit	7	6	5	4	3	2	1	0
	—	—	—	—	FERE	OERE	—	BERE
Value after reset	0	0	0	0	0	0	0	0
R/W	R	R	R	R	R/W	R/W	R	R/W

Table 16.37 RLN3nLEDE Register Contents

Bit Position	Bit Name	Function
7 to 4	Reserved	When read, the value after reset is read. When writing, write the value after reset.
3	FERE	Framing Error Detection Enable 0: Disables framing error detection. 1: Enables framing error detection.
2	OERE	Overrun Error Detection Enable 0: Disables overrun error detection. 1: Enables overrun error detection.
1	Reserved	When read, the value after reset is read. When writing to this bit, write the value after reset.
0	BERE	Bit Error Detection Enable 0: Disables bit error detection. 1: Enables bit error detection.

Set the RLN3nLEDE register when the OMM0 bit in the RLN3nLMST register is 0_B (in LIN reset mode).

FERE Bit (Framing Error Detection Enable)

The FERE bit enables or disables detection of the framing error.
With 0 set, the framing error is not detected.
With 1 set, the framing error is detected.
When this bit is set to 1, the detection result is indicated in the FER flag in the RLN3nLEST register.
For details on the framing error, see **Section 16.8.5, Error Status**.

OERE Bit (Overrun Error Detection Enable)

This bit enables or disables detection of the overrun error.
With 0 set, the overrun error is not detected.
With 1 set, the overrun error is detected.
When this bit is set to 1, the detection result is reflected in the OER flag in the RLN3nLEST register.
For details on the overrun error, see **Section 16.8.5, Error Status**.

BERE Bit (Bit Error Detection Enable)

The BERE bit enables or disables detection of the bit error.
With 0 set, the bit error is not detected.
With 1 set, the bit error is detected.
When this bit is set to 1, the detection result is indicated in the BER flag in the RLN3nLEST register.
In full-duplex communication, do not set this bit to “1”.
Do not set this register when the NSPB bits in the RLN3nLWBR register is 0101_B (6 sampling) and the LRDNFS bit in the RLN3nLMD register is 0 (noise filter is enabled).
For details on the bit error, see **Section 16.8.5, Error Status**.

16.3.3.7 RLN3nLCUC — UART Control Register

Access: This register can be read/written in 8-bit units
Address: <RLIN3n_base> + $0E_H$
Value after reset: 00_H

Bit	7	6	5	4	3	2	1	0
	—	—	—	—	—	—	—	OM0
Value after reset	0	0	0	0	0	0	0	0
R/W	R	R	R	R	R	R	R	R/W

Table 16.38 RLN3nLCUC Register Contents

Bit Position	Bit Name	Function
7 to 1	Reserved	When read, the value after reset is read. When writing, write the value after reset.
0	OM0	LIN Reset 0: LIN reset mode 1: Release from LIN reset mode

After a value is written to this register, confirm that the value written is actually indicated in the RLN3nLMST register before writing another value.

OM0 Bit (LIN Reset)

The OM0 bit selects either a transition to LIN reset mode or release from LIN reset mode.
Setting this bit to 0 causes a transition to LIN reset mode.
Setting it to 1 leads to release from LIN reset mode.

16.3.3.8 RLN3nLTRC — UART Transmission Control Register

Access: This register can be read/written in 8-bit units

Address: <RLIN3n_base> + 10_H

Value after reset: 00_H

Bit	7	6	5	4	3	2	1	0
	—	—	—	—	—	—	RTS	—
Value after reset	0	0	0	0	0	0	0	0
R/W	R	R	R	R	R	R	R/W	R

Table 16.39 RLN3nLTRC Register Contents

Bit Position	Bit Name	Function
7 to 2	Reserved	When read, the value after reset is read. When writing, write the value after reset.
1	RTS	UART Buffer Transmission Start 0: UART Buffer transmission is stopped. 1: UART Buffer transmission is started.
0	Reserved	When read, the value after reset is read. When writing, write the value after reset.

RTS Bit (UART Buffer Transmission Start)

When transmitting data from the UART buffer, set this bit to “1”.
Only 1 can be written to this bit; 0 cannot be written.
Write to this bit when the UTOE bit in the RLN3nLUOER register is 1 (transmission enable) and the UTS bit in the RLN3nLST register is 0 (transmission is not in progress).
Once set, regardless of errors, this bit is automatically cleared to 0 upon completion of the number of data transmission specified by the MDL bit in the RLN3nLDFC register. This bit is also automatically cleared to 0 upon transition to LIN reset mode.
Writing a value to this bit is disabled when the OMM0 bit of the RLN3nLMST register is 0_B (in LIN reset mode).
When writing 1 to this bit while the UTSW bit in the RLN3nLRFC register is 1 (when UART buffer transmission is requested, the start of transmission is delayed until the stop bit of reception data is completed), write only during the reception of the stop bit.

16.3.3.9 RLN3nLMST — UART Mode Status Register

Access: This register can only be read in 8-bit units

Address: <RLIN3n_base> + 11_H

Value after reset: 00_H

Bit	7	6	5	4	3	2	1	0
	—	—	—	—	—	—	—	OMM0
Value after reset	0	0	0	0	0	0	0	0
R/W	R	R	R	R	R	R	R	R

Table 16.40 RLN3nLMST Register Contents

Bit Position	Bit Name	Function
7 to 1	Reserved	When read, the value after reset is read.
0	OMM0	LIN Reset Status Monitor 0: The module is in LIN reset mode. 1: The module is not in LIN reset mode.

OMM0 Bit (LIN Reset Status Monitor)

The OMM0 bit indicates the current operating mode.

16.3.3.10 RLN3nLST — UART Status Register

Access: This register can be read/written in 8-bit units

Address: <RLIN3n_base> + 12_H

Value after reset: 00_H

Bit	7	6	5	4	3	2	1	0
	—	—	URS	UTS	ERR	—	—	FTC
Value after reset	0	0	0	0	0	0	0	0
R/W	R	R	R	R	R	R	R	R/W

Table 16.41 RLN3nLST Register Contents

Bit Position	Bit Name	Function
7, 6	Reserved	When read, the value after reset is read. When writing, write the value after reset.
5	URS	Data Reception Status 0: Reception is not operated. 1: Reception is operated.
4	UTS	Transmission Status 0: Transmission is not operated. 1: Transmission is operated.
3	ERR	Error Detection Flag 0: No error has been detected. 1: Error has been detected.
2, 1	Reserved	When read, the value after reset is read. When writing, write the value after reset.
0	FTC	Successful UART Buffer Transmission Flag 0: UART buffer transmission has not been completed. 1: UART buffer transmission has been completed.

The RLN3nLST register is automatically cleared to "00_H" upon transition to LIN reset mode. In LIN reset mode, this register cannot be written to. In LIN reset mode, the register retains "00_H". To clear the specific bits in the register, write 0 to the bits to be cleared and write 1 to the other bits by using the store instruction.

URS Bit (Data Reception Status)

At the start of the reception, this flag is set to 1.
The reception is started under the following condition.

- When the start bit is detected

At the end of reception, this flag is cleared to 0. While reception is stopped, this flag retains 0.
The reception is ended under the following conditions.

- Sampling point of the first bit of the stop bits

UTS Bit (Transmission Status Flag)

At the start of the transmission, this flag is set to 1. During the transmission, this flag retains 1.
The transmission is started under the following conditions.

- When transmission data is set to the RLN3nLUTDR or RLN3nLUWTDR register
- When the RTS bit in the RLN3nLTRC register is set to 1

This flag is cleared to 0 at the end of transmission.
The transmission is ended under the following conditions.

- When transmission of data set in the RLN3nLUTDR or RLN3nLUWTDR register is completed and next data is not set
- When transmission from UART buffer is completed (when the RTS bit in the RLN3nLTRC register is cleared to 0)

ERR Flag (Error Detection Flag)

This flag is set to 1 upon detection of an error, detection of an expansion bit, or upon ID matching (when the value of at least one of the flags of the RLN3nLEST register is 1). At this time, an interrupt request for RLIN3n status is generated. However, when this bit is 1, an interrupt is not generated upon detection of an error, detection of an expansion bit, or upon ID matching. To clear the bit to 0, write 0 to the UPER, EXBT, OER, and ER flags in the RLN3nLEST register.

FTC Flag (Successful Frame/Wake-up Transmission Flag)

Only 0 can be written to the FTC flag; when 1 is written, the bit retains the value that has been retained before 1 is written.
Regardless of errors, this bit is set to 1 upon completion of the number of data transmission specified by the MDL bit in the RLN3nLDFC register from the UART buffer. At this time, an interrupt request for RLIN3n transmission is generated. Write 0 to clear the bit.

16.3.3.11 RLN3nLEST — UART Error Status Register

Access: This register can be read/written in 8-bit units

Address: <RLIN3n_base> + 13_H

Value after reset: 00_H

Bit	7	6	5	4	3	2	1	0
	—	UPER	IDMT	EXBT	FER	OER	—	BER
Value after reset	0	0	0	0	0	0	0	0
R/W	R	R/W	R/W	R/W	R/W	R/W	R	R/W

Table 16.42 RLN3nLEST Register Contents

Bit Position	Bit Name	Function
7	Reserved	When read, the value after reset is read. When writing, write the value after reset.
6	UPER	Parity Error Flag 0: Parity error has not been detected. 1: Parity error has been detected.
5	IDMT	ID Matching Flag 0: The receive data does not match with the ID value. 1: The receive data matches with the ID value.
4	EXBT	Expanded Bit Detection Flag 0: Expanded bit has not been detected. 1: Expanded bit has been detected.
3	FER	Framing Error Flag 0: Framing error has not been detected. 1: Framing error has been detected.
2	OER	Overrun Error Flag 0: Overrun error has not been detected. 1: Overrun error has been detected.
1	Reserved	When read, the value after reset is read. When writing, write the value after reset.
0	BER	Bit Error Flag 0: Bit error has not been detected. 1: Bit error has been detected.

The RLN3nLEST register is automatically cleared to 00_H when the module transitions to LIN reset mode. In LIN reset mode, this register cannot be written to, and the value of 00_H is held. To clear certain bits in this register, write 0 to those bits, and write 1 to the bits not to be cleared by using the store instruction.

UPER Flag (Parity Error Flag)

Only 0 can be written to this flag; when 1 is written, the bit retains the value that has been retained before 1 is written.
This flag is set to 1 upon parity error detection. To clear the bit, write 0 to the bit.

IDMT Flag (ID Matching Flag)

Only 0 can be written to this flag; when 1 is written, the bit retains the value that has been retained before 1 is written.

The IDMT flag becomes 1 when all the following conditions are met:

- The UEBE bit in the RLN3nLUOR1 register is 1 (expansion bit enabled)
- The UECD bit in the RLN3nLUOR1 register is 0 (expansion bit comparison enabled)

- The UEBDCE bit in the RLN3nLUOR1 register is 1 (expansion bit/data comparison enabled)
  - The received expansion bit and the value of the UEBDL bit of the RLN3nLUOR1 register are matched.
  - The 8-bit receive data excluding the expansion bit and the value of the RLN3nLIDB register are matched.

To clear the bit, write 0 to the bit.

EXBT Flag (Expanded Bit Detection Flag)

Only 0 can be written to this flag; when 1 is written, the bit retains the value that has been retained before 1 is written.
When the UEBE bit in the RLN3nLUOR1 register is 1 (expansion bit enable), if the received expansion bit matches with the UEBDL bit in the RLN3nLUOR1 register, this flag is set to 1.
To clear the bit, write 0 to the bit.

FER Flag (Framing Error Flag)

Only 0 can be written to this flag; when 1 is written, the bit retains the value that has been retained before 1 is written.
The FER flag is set to 1 upon framing error detection while the FERE bit of the RLN3nLEDE register is 1 (framing error detection enabled). To clear the bit, write 0 to the bit.

OER Flag (Overrun Error Flag)

Only 0 can be written to this flag; when 1 is written, the bit retains the value that has been retained before 1 is written.
The 0ER flag is set to 1 upon overrun error detection while the OERE bit of the RLN3nLEDE register is 1 (overrun error detection enabled). To clear the bit, write 0 to the bit.

BER Flag (Bit Error Flag)

Only 0 can be written to the BER flag; when 1 is written, the bit retains the value that has been retained before 1 is written.
The BER flag is set to 1 when the transmitted data and the data monitored by the receive pin do not match while the BERE bit of the RLN3nLEDE register is 1 (bit error detection enabled).
To clear the bit, write 0 to the bit.

16.3.3.12 RLN3nLDFC — UART Data Field Configuration Register

Access: This register can be read/written in 8-bit units.

Address: <RLIN3n_base> + 14_H

Value after reset: 00_H

Bit	7	6	5	4	3	2	1	0
	—	—	UTSW	—	MDL[3:0]			
Value after reset	0	0	0	0	0	0	0	0
R/W	R	R	R/W	R	R/W	R/W	R/W	R/W

Table 16.43 RLN3nLDFC Register Contents

Bit Position	Bit Name	Function
7, 6	Reserved	When read, the value after reset is read. When writing, write the value after reset.
5	UTSW	Transmission Start Wait 0: When UART transmission is requested, transmission is started immediately. 1: When UART transmission is requested, transmission is not started until reception of the stop bit is completed.
4	Reserved	When read, the value after reset is read. When writing, write the value after reset.
3 to 0	MDL[3:0]	UART Buffer Data Length Select b3 b0 0 0 0 0: 9 data 0 0 0 1: 1 data 0 0 1 0: 2 data 0 0 1 1: 3 data 0 1 0 0: 4 data 0 1 0 1: 5 data 0 1 1 0: 6 data 0 1 1 1: 7 data 1 0 0 0: 8 data 1 0 0 1: 9 data Settings other than the above are prohibited.

UTSW Bit (Transmission Start Wait)

This bit controls the transmission start timing of UART buffer.
With 0 set, transmission is started as soon as the start of UART buffer transmit is requested.
With 1 set, transmission is started after the completion of the stop bit reception.
Note that the wait time is only 1 bit even if the stop bit length is set to 2 bits with the USBLS bit in the RLN3nLBFC register.
This bit is enabled when the RTS bit in the RLN3nLTRC register is set to 1. In addition, writing a value to this bit is disabled when the RTS bit is 1 (UART buffer transmission started).
Set this bit to 1 only to switch from reception to transmission in half-duplex communication.

MDL[3:0] Bits (UART Buffer Data Length Select)

This bit specifies the data length of the UART buffer.
Writing a value to these bits is disabled when the RTS bit in the RLN3nLTRC register is 1 (UART buffer transmission started).

16.3.3.13 RLN3nLIDB — UART ID Buffer Register

Access: This register can be read/written in 8-bit units

Address: <RLIN3n_base> + 15_H

Value after reset: 00_H

Bit	7	6	5	4	3	2	1	0
	ID[7:0]							
Value after reset	0	0	0	0	0	0	0	0
R/W	R/W	R/W	R/W	R/W	R/W	R/W	R/W	R/W

Table 16.44 RLN3nLIDB Register Contents

Bit Position	Bit Name	Function
7 to 0	ID[7:0]	ID value that is referred for the expansion bit data comparison is set

ID Bit (ID Bit)

When the UEBE bit in the RLN3nLUOR1 register is set to 1 (expansion bit enabled), the UECD bit is set to 0 (expansion bit comparison enabled), and the UEBDCE bit is set to 1 (expansion bit/data comparison enabled), set the receive data and the value to be compared. Write to the RLN3nLIDB register when the URS bit in the RLN3nLST register is 0 (receive operation is not in progress).

16.3.3.14 RLN3nLUDB0 — UART Data 0 Buffer Register

Access: This register can be read/written in 8-bit units

Address: <RLIN3n_base> + 17_H

Value after reset: 00_H

Bit	7	6	5	4	3	2	1	0
	UDB[7:0]							
Value after reset	0	0	0	0	0	0	0	0
R/W	R/W	R/W	R/W	R/W	R/W	R/W	R/W	R/W

Table 16.45 RLN3nLUDB0 Register Contents

Bit Position	Bit Name	Function
7 to 0	UDB[7:0]	UART transmission data is set

If the data length selection corresponds to 9 data bytes (RLN3nLDFC.MDL bit is “0_H” or “9_H”) for multi-byte UART transmission, then the first data value for UART communication is set in this buffer.

Write to the RLN3nLUDB0 register when the RTS bit of the RLN3nLTRC register is 0 (UART buffer transmission stopped).

For details about the UART buffer, see **Section 16.8.1.2, UART Buffer Transmission, (1) UART Buffer Transmission**.

16.3.3.15 RLN3nLDBRb — UART Data Buffer b Register (b = 1 to 8)

Access: This register can be read/written in 8-bit units.

Address: RLN3nLDBR1: <RLIN3n_base> +18_H
RLN3nLDBR2: <RLIN3n_base> + 19_H
RLN3nLDBR3: <RLIN3n_base> + $1A_H$
RLN3nLDBR4: <RLIN3n_base> + $1B_H$
RLN3nLDBR5: <RLIN3n_base> + $1C_H$
RLN3nLDBR6: <RLIN3n_base> + $1D_H$
RLN3nLDBR7: <RLIN3n_base> + $1E_H$
RLN3nLDBR8: <RLIN3n_base> + $1F_H$

Value after reset: 00_H

Bit	7	6	5	4	3	2	1	0
	LDB[7:0]							
Value after reset	0	0	0	0	0	0	0	0
R/W	R/W	R/W	R/W	R/W	R/W	R/W	R/W	R/W

Table 16.46 RLN3nLDBRb Register Contents

Bit Position	Bit Name	Function
7 to 0	LDB[7:0]	Sets the data to be transmitted.

This register specifies the data transmitted from the UART buffer.

Write to these registers when the RTS bit of the RLN3nLTRC register is 0 (UART buffer transmission stopped).

For details about the UART buffer, see **Section 16.8.1.2, UART Buffer Transmission**, **(1) UART Buffer Transmission**.

16.3.3.16 RLN3nLUOER — UART Operation Enable Register

Access: This register can be read/written in 8-bit units

Address: <RLIN3n_base> + 20_H

Value after reset: 00_H

Bit	7	6	5	4	3	2	1	0
	—	—	—	—	—	—	UROE	UTOE
Value after reset	0	0	0	0	0	0	0	0
R/W	R	R	R	R	R	R	R/W	R/W

Table 16.47 RLN3nLUOER Register Contents

Bit Position	Bit Name	Function
7 to 2	Reserved	When read, the value after reset is read. When writing, write the value after reset.
1	UROE	Reception Enable 0: Disables reception. 1: Enables reception.
0	UTOE	Transmission Enable 0: Disables transmission. 1: Enables transmission.

The RLN3nLUOER register is automatically cleared to 00_H upon transition to LIN reset mode.

In LIN reset mode, this register cannot be written to. In LIN reset mode, the register retains 00_H.

UROE Bit (Reception Enable)

The UROE bit enables or disables reception.
With 0 set, reception is disabled.
With 1 set, reception is enabled.
Do not clear this bit during reception. If the communication is suspended during reception, set the OM0 bit in the RLN3nLCUC register to 0 (LIN reset mode) to shift to the LIN reset mode. However, the transmit operation is also suspended at this time.
When the UART buffer transmits data, do not set this bit to 1.

UTOE Bit (Transmission Enable)

The UTOE bit enables or disables transmission.
With 0 set, transmission is disabled.
With 1 set, transmission is enabled.
Do not clear this bit during transmission. If the communication is suspended during transmission, set the OM0 bit in the RLN3nLCUC register to 0 (LIN reset mode) to shift to the LIN reset mode. However, the receive operation is also suspended at this time.

16.3.3.17 RLN3nLUOR1 — UART Option Register 1

Access: This register can be read/written in 8-bit units

Address: <RLIN3n_base> + 21_H

Value after reset: 00_H

Bit	7	6	5	4	3	2	1	0
	—	—	—	UECD	UTIGTS	UEBDCE	UEBDL	UEBE
Value after reset	0	0	0	0	0	0	0	0
R/W	R	R	R	R/W	R/W	R/W	R/W	R/W

Table 16.48 RLN3nLUOR1 Register Contents

Bit Position	Bit Name	Function
7 to 5	Reserved	When read, the value after reset is read. When writing, write the value after reset.
4	UECD	Expansion Bit Comparison Disable 0: Enables comparison between the received expansion bit and the UEBDL bit value. 1: Disables comparison between the received expansion bit and the UEBDL bit value.
3	UTIGTS	Transmission Interrupt Generation Timing Select 0: Transmission interrupt is generated at the start of transmission. 1: Transmission interrupt is generated at the completion of transmission.
2	UEBDCE	Expansion Bit Data Comparison Enable 0: Disables data comparison after an expansion bit is detected. 1: Enables data comparison after an expansion bit is detected.
1	UEBDL	Expansion Bit Detection Level Select 0: Selects expansion bit value 0 as the expansion bit detection level. 1: Selects expansion bit value 1 as the expansion bit detection level.
0	UEBE	Expansion Bit Enable 0: Disables expansion bit operation. 1: Enables expansion bit operation.

UECD Bit (Expansion Bit Comparison Disable)

The UECD bit enables or disables comparison between the received expansion bit and the UEBDL bit value when the UEBE bit is 1 (expansion bit operation is enabled).
With 0 set, comparison between the received expansion bit and the UEBDL bit value is enabled when the expansion bit is received.
With 1 set, comparison between the received expansion bit and the UEBDL bit value is disabled when the expansion bit is received.
Set this bit when the OMM0 bit of the RLN3nLMST register is 0_B (in LIN reset mode).
Do not set this bit to 1 when the UART buffer is used.
Do not set this bit to 1 when the UEBDCE bit is 1 (expansion bit/data comparison enable).

UTIGTS Bit (Transmission Interrupt Generation Timing Select)

The UTIGTS bit sets the generation timing of the transmission interrupt.
With 0 set, the transmission interrupt is generated at the start of transmission.
With 1 set, the transmission interrupt is generated at the completion of transmission.
When transmission from the UART buffer is performed with 0 set, the transmission interrupt is generated only at the start of the transmission of the last data of the data length set with the MDL bits in the RLN3nLDFC register.
When transmission from the UART buffer is performed with 1 set, the transmission interrupt is

generated only at the completion of the transmission of the last data of the data length set with the MDL bits in the RLN3nLDFC register.

UEBDCE Bit (Expansion Bit Data Comparison Enable)

After an expansion bit is detected, this bit enables or disables the comparison between the 8-bit receive data excluding the expansion bit and the value of the RLN3nLIDB register.
With 0 set, when the level selected by the UEBDL bit is detected as an expansion bit, the comparison between the receive value in the RLN3nLURDR register and the value of the RLN3nLIDB register is disabled.
With 1 set, when the level selected by the UEBDL bit is detected as an expansion bit, the comparison between the receive value in the RLN3nLURDR register and the value of the RLN3nLIDB register is enabled.
Set this bit when the OMM0 bit of the RLN3nLMST register is 0_B (in LIN reset mode).
Do not set this bit to 1 when the UEBE bit is 0 (expansion bit operation disabled).
Do not set this bit to 1 when the UECD bit is 1 (expansion bit comparison disabled).
Do not set this bit to 1 when the UART buffer is used.

UEBDL Bit (Expansion Bit Detection Level Select)

The UEBDL bit sets the level to be detected as the expansion bit when the UEBE bit is 1 (expansion bit operation is enabled) and the UECD bit is 0 (comparison of the expansion bit is enabled).
With 0 set, expansion bit value 0 is the level to be detected as the expansion bit.
With 1 set, expansion bit value 1 is the level to be detected as the expansion bit.
Set this bit when the OMM0 bit of the RLN3nLMST register is 0_B (in LIN reset mode).
Do not set this bit to 1 when the UART buffer is used.

UEBE Bit (Expansion Bit Enable Bit)

The UEBE bit enables or disables expansion bit operation.
With 0 set, expansion bit operation is disabled.
With 1 set, expansion bit operation is enabled.
Set this bit when the OMM0 bit of the RLN3nLMST register is 0_B (in LIN reset mode).
Do not set this bit to 1 when the UART buffer is used.

16.3.3.18 RLN3nLUTDR — UART Transmission Data Register

Access: RLN3nLUTDR register can be read/written in 16-bit units.
RLN3nLUTDRL register can be read/written in 8-bit units.
RLN3nLUTDRH register can be read/written in 8-bit units.

Address: RLN3nLUTDR: <RLIN3n_base> + 24_H
RLN3nLUTDRL: <RLIN3n_base> + 24_H
RLN3nLUTDRH: <RLIN3n_base> + 25_H

Value after reset: 0000_H

Bit	15	14	13	12	11	10	9	8	7	6	5	4	3	2	1	0
	—	—	—	—	—	—	—	UTD[8:0]								
Value after reset	0	0	0	0	0	0	0	0	0	0	0	0	0	0	0	0
R/W	R	R	R	R	R	R	R	R/W	R/W	R/W	R/W	R/W	R/W	R/W	R/W	R/W

Table 16.49 RLN3nLUTDR Register Contents

Bit Position	Bit Name	Function
15 to 9	Reserved	When read, the value after reset is read. When writing, write the value after reset.
8 to 0	UTD[8:0]	Sets the data to be transmitted from the transmission buffer. Setting range: 000_H to $1FF_H$

The RLN3nLUTDR register sets the data to be transmitted from the transmit data register.

Writing data to this register with the UTOE bit in the RLN3nLUOER register set to 1 starts transmission.

This register can be accessed in 8 bits.

In 9-bit communication mode, do not attempt 8-bit access.

Do not write data to this register when data transmission from the UART buffer is in progress.

Also, do not write data to this register when a transmission request is being generated due to write access to the RLN3nLUWTDR register.

When transmitting data continuously, do not set another piece of transmission data in this register before the generation of transmission interrupt.

The table below shows the bit arrangement according to the set communication format.

Table 16.50 Bit Arrangement of the RLN3nLUTDR Register According to Each Communication Format

	RLN3nLUTDR								
	b8	b7	b6	b5	b4	b3	b2	b1	b0
7-bit; LSB first	—	—	Bit6	Bit5	Bit4	Bit3	Bit2	Bit1	Bit0
7-bit; MSB first	—	—	Bit0	Bit1	Bit2	Bit3	Bit4	Bit5	Bit6
8-bit; LSB first	—	Bit7	Bit6	Bit5	Bit4	Bit3	Bit2	Bit1	Bit0
8-bit; MSB first	—	Bit0	Bit1	Bit2	Bit3	Bit4	Bit5	Bit6	Bit7
9-bit; LSB first	Bit8	Bit7	Bit6	Bit5	Bit4	Bit3	Bit2	Bit1	Bit0
9-bit; MSB first	Bit0	Bit1	Bit2	Bit3	Bit4	Bit5	Bit6	Bit7	Bit8

16.3.3.19 RLN3nLURDR — UART Reception Data Register

Access: RLN3nLURDR register can only be read in 16-bit units.
RLN3nLURDRL register can only be read in 8-bit units.
RLN3nLURDRH register can only be read in 8-bit units.

Address: RLN3nLURDR: <RLIN3n_base> + 26_H
RLN3nLURDRL: <RLIN3n_base> + 26_H
RLN3nLURDRH: <RLIN3n_base> + 27_H

Value after reset: 0000_H

Bit	15	14	13	12	11	10	9	8	7	6	5	4	3	2	1	0
	—	—	—	—	—	—	—	URD [8:0]								
Value after reset	0	0	0	0	0	0	0	0	0	0	0	0	0	0	0	0
R/W	R	R	R	R	R	R	R	R	R	R	R	R	R	R	R	R

Table 16.51 RLN3nLURDR Register Contents

Bit Position	Bit Name	Function
15 to 9	Reserved	When read, the value after reset is read.
8 to 0	URD [8:0]	Set the reception data Setting range: 000_H to $1FF_H$

The RLN3nLURDR allows the reception data to be read from the receive data register.

When the UROE bit in the RLN3nLUOER register is 1, the reception data is stored in this register and can be read out.

This register is updated at the stop bit of the reception data.

This register is also updated when an error is caused by the parity or stop bit.

However, the value of this register is not updated upon occurrence of an overrun error when the OERE bit of the RLN3nLEDE register is 1 (overrun detection enabled). The value of this register is updated upon occurrence of an overrun error when the OERE bit is 0 (overrun detection disabled).

Read this register upon occurrence of a receive error (overrun error, framing error, parity error) when the OERE bit of the RLN3nLEDE register is 1 (overrun error detection enabled). If the next data is received without reading this register, an overrun error occurs.

This register can be accessed in 8 bits.

However, during expansion bit use (UEBE bit of the RLN3nLUOR1 register is 1 (expansion bit operation enabled), do not attempt 8-bit access.

The table below shows the bit arrangement according to the set communication format.

Table 16.52 Bit Arrangement of the RLN3nLURDR Register According to Each Communication Format

	RLN3nLURDR								
	b8	b7	b6	b5	b4	b3	b2	b1	b0
7-bit; LSB first	—	—	Bit6	Bit5	Bit4	Bit3	Bit2	Bit1	Bit0
7-bit; MSB first	—	—	Bit0	Bit1	Bit2	Bit3	Bit4	Bit5	Bit6
8-bit; LSB first	—	Bit7	Bit6	Bit5	Bit4	Bit3	Bit2	Bit1	Bit0
8-bit; MSB first	—	Bit0	Bit1	Bit2	Bit3	Bit4	Bit5	Bit6	Bit7
9-bit; LSB first	Bit8	Bit7	Bit6	Bit5	Bit4	Bit3	Bit2	Bit1	Bit0
9-bit; MSB first	Bit0	Bit1	Bit2	Bit3	Bit4	Bit5	Bit6	Bit7	Bit8

16.3.3.20 RLN3nLUWTDR — UART Wait Transmission Data Register

Access: RLN3nLUWTDR register can be read/written in 16-bit units.
RLN3nLUWTDRL register can be read/written in 8-bit units.
RLN3nLUWTDRH register can be read/written in 8-bit units.

Address: RLN3nLUWTDR: <RLIN3n_base> + 28_H
RLN3nLUWTDRL: <RLIN3n_base> + 28_H
RLN3nLUWTDRH: <RLIN3n_base> + 29_H

Value after reset: 0000_H

Bit	15	14	13	12	11	10	9	8	7	6	5	4	3	2	1	0
	—	—	—	—	—	—	—	UWTD[8:0]								
Value after reset	0	0	0	0	0	0	0	0	0	0	0	0	0	0	0	0
R/W	R	R	R	R	R	R	R	R/W	R/W	R/W	R/W	R/W	R/W	R/W	R/W	R/W

Table 16.53 RLN3nLUWTDR Register Contents

Bit Position	Bit Name	Function
15 to 9	Reserved	When read, the value after reset is read. When writing, write the value after reset.
8 to 0	UWTD[8:0]	Sets the data to be transmitted from the wait transmit data register after waiting for the stop bit reception to be completed. Setting range: 000_H to $1FF_H$

The RLN3nLUWTDR register sets the data to be transmitted from the UART wait transmit data register.

Writing data to this register with the UTOE bit in the RLN3nLUOER register set to 1 starts transmission.

Use this register only to switch from reception to transmission in half-duplex communication.

The user should write to this register only while the stop bit is being received.

Note that the wait time is only 1 bit even if the stop bit length is set to 2 bits with the USBLS bit in the RLN3nLBFC register.

When this register is read, the RLN3nLUTDR register value is actually read.

In 9-bit communication mode, do not attempt 8-bit access.

Do not write data to this register when data transmission from the UART buffer is in progress.

The table below shows the bit arrangement according to the set communication format.

Table 16.54 Bit Arrangement of the RLN3nLUWTDR Register According to Each Communication Format

	RLN3nLUWTDR								
	b8	b7	b6	b5	b4	b3	b2	b1	b0
7-bit; LSB first	—	—	Bit6	Bit5	Bit4	Bit3	Bit2	Bit1	Bit0
7-bit; MSB first	—	—	Bit0	Bit1	Bit2	Bit3	Bit4	Bit5	Bit6
8-bit; LSB first	—	Bit7	Bit6	Bit5	Bit4	Bit3	Bit2	Bit1	Bit0
8-bit; MSB first	—	Bit0	Bit1	Bit2	Bit3	Bit4	Bit5	Bit6	Bit7
9-bit; LSB first	Bit8	Bit7	Bit6	Bit5	Bit4	Bit3	Bit2	Bit1	Bit0
9-bit; MSB first	Bit0	Bit1	Bit2	Bit3	Bit4	Bit5	Bit6	Bit7	Bit8

16.4 Interrupt Sources

The LIN/UART interface generates three types of interrupt requests.

- RLIN3n successful transmission interrupt
- RLIN3n successful reception interrupt
- RLIN3n status interrupt

When the LIOS bit in the RLN3nLMD register is set to 0, no interrupt occurs.

Setting the LIOS bit in the RLN3nLMD register to 1 allows to output the RLIN3n transmission interrupt, RLIN3n successful reception interrupt, or RLIN3n status interrupt depending on the interrupt request.

Table 16.55 lists the sources for each interrupt.

Table 16.55 Interrupt Sources

		LIOS bit in RLN3nLMD register is 1*1		
		RLIN3n Transmission Interrupt	**RLIN3n Successful Reception Interrupt**	**RLIN3n Status Interrupt**
LIN mode	LIN master mode	• Successful frame transmission • Successful wake-up transmission • Successful header transmission	• Successful wake-up reception • Successful wake-up reception	• Bit error • Physical bus error • Frame/response timeout error • Framing error • Checksum error • Response preparation error
UART mode		• Transmission start/ successful transmission	• Successful reception • Expansion bit mismatch	• Bit error • Overrun error • Framing error • Expansion bit match • ID match • Parity error

Note 1. The LIOS bit setting is valid in LIN Mode. In UART mode, setting the LIOS bit is not required.

In LIN mode, each interrupt request is output when the corresponding bit in the RLN3nLIE register is 1 (interrupt is enabled) and the corresponding flag in the RLN3nLST register is 1.

16.5 Modes

The LIN/UART interface provides the following four modes, depending upon the specific function to be performed:

- LIN reset mode
- LIN mode
  - LIN master mode
- UART mode
- LIN self-test mode

In LIN reset mode, clock supply to the LIN/UART interface stops. This enables to reduce power consumption.

Figure 16.2 shows mode transitions. **Table 16.60** describes mode transition conditions. **Table 16.60** lists operations available in each mode.

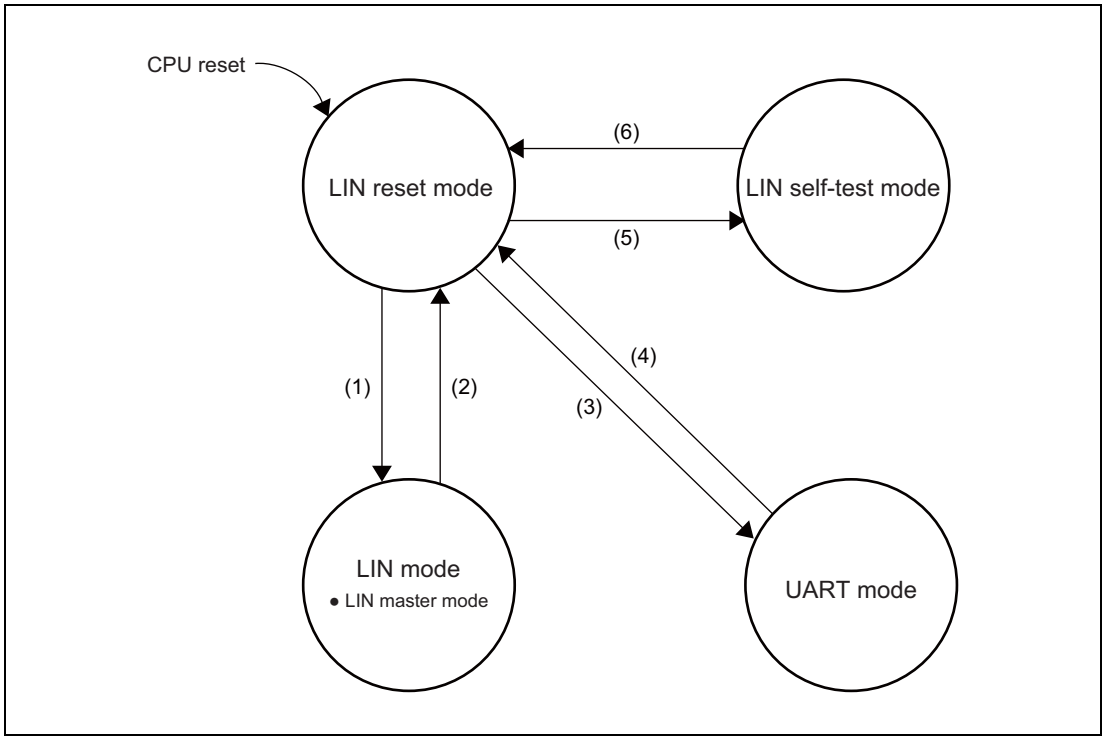

Figure 16.2 Mode Transitions

Table 16.56 Transition Condition of Each Mode

	Transition Mode			Transition Condition
(1)	LIN reset mode	→	LIN mode • LIN master mode	• LMD bit in the RLN3nLMD register = 00_B and OM1 and OM0 bits in the RLN3nLCUC register = 01_B or 11_B
(2)	LIN mode	→	LIN reset mode	OM0 bit in RLN3nLCUC register = 0_B
(3)	LIN reset mode	→	UART mode	LMD bit in RLN3nLMD register = 01_B and OM0 bit in RLN3nLCUC register = 1_B
(4)	UART mode	→	LIN reset mode	OM0 bit in RLN3nLCUC register = 0_B
(5)	LIN reset mode	→	LIN self-test mode	See **Section 16.9, LIN Self-Test Mode**.
(6)	LIN self-test mode	→	LIN reset mode	See **Section 16.9, LIN Self-Test Mode**.

Table 16.57 Operations Available in Each Mode

LIN Mode		
LIN Master Mode	**UART Mode**	**LIN Self-Test Mode**
Header transmission Response transmission Response reception Wake-up transmission Wake-up reception Error detection	UART transmission UART reception Error detection	Self test

Whether a transition has been caused to LIN reset mode, the LIN mode, or the UART mode can be verified by reading the LMD bits in the RLN3nLMD register or the OMM0 bit in the RLN3nLMST register.

For a description of the LIN self-test mode, see **Section 16.9, LIN Self-Test Mode**.

16.6 LIN Reset Mode

Setting the OM0 bit in the RLN3nLCUC register to 0 (LIN reset mode) causes a transition to LIN reset mode. The change to LIN reset mode can be verified by determining that the OMM0 bit in the RLN3nLMST register has been set to 0 (LIN reset mode). In this mode, the LIN communication and the UART communication functions are halted.

From LIN reset mode, transitions to LIN mode, UART mode, and LIN self-test mode can be made.

When the mode changes to LIN reset mode, the following registers are initialized to their reset values, and as long as LIN reset mode is in effect, they retain their initial values.

- RLN3nLTRC register
- RLN3nLST register
- RLN3nLEST register
- RLN3nLUOER register

The following registers retain their previous values even when a transition to LIN reset mode is made:

- RLN3nLWBR register
- RLN3nLBRP0 register
- RLN3nLBRP1 register
- RLN3nLMD register
- RLN3nLBFC register
- RLN3nLSC register
- RLN3nLWUP register
- RLN3nLIE register
- RLN3nLEDE register
- RLN3nLDFC register
- RLN3nLIDB register
- RLN3nLCBR register
- RLN3nLUDB0 register
- RLN3nLDBRb register (b = 1 to 8)
- RLN3nLUOR1 register
- RLN3nLUTDR register
- RLN3nLURDR register
- RLN3nLUWTDR register

16.7 LIN Mode

LIN mode can operate in LIN master mode.

In LIN master mode, the following operations can be performed: header transmission, response transmission, response reception, wake-up transmission, wake-up reception, and error detection. In LIN reset mode, setting the LMD bits in the RLN3nLMD register to 00_B (LIN master mode) and the OM1 and OM0 bits in the RLN3nLCUC register to either 01_B or 11_B sets LIN master mode, turning the OMM1 and OMM0 bits in the RLN3nLMST register to either 01_B to 11_B.

When changing a submode to another submode within LIN mode, a transition to LIN reset mode should first be made and change the LMD bits in the RLN3nLMD register.

The LIN mode provides the following two operation modes:

- LIN operation mode
- LIN wake-up mode

Figure 16.3 shows the transition of operation modes. **Table 16.58** describes the transition conditions of operation modes.

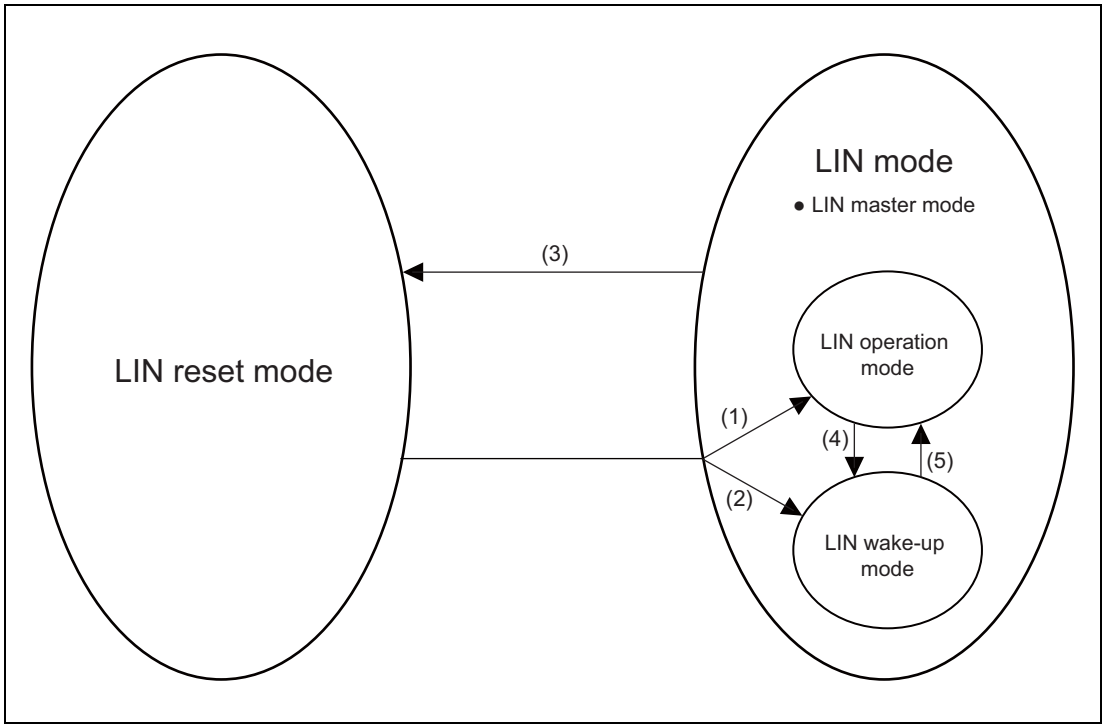

Figure 16.3 Transition of Operation Modes

Table 16.58 Transition Condition for Operation Mode

	Operation Mode Transition		Transition Condition
(1)	LIN reset mode	→ LIN mode • LIN operation mode	LMD bit in RLN3nLMD register = 00_B and OM1 and OM0 bits in RLN3nLCUC register = 11_B
(2)	LIN reset mode	→ LIN mode • LIN wake-up mode	LMD bit in RLN3nLMD register = 00_B and OM1 and OM0 bits in RLN3nLCUC register = 01_B
(3)	LIN mode • LIN operation mode • LIN wake-up mode	→ LIN reset mode	OM0 bit in RLN3nLCUC register = 0_B
(4) *1	LIN mode • LIN operation mode	→ LIN mode • LIN wake-up mode	OM1 and OM0 bits in RLN3nLCUC register = 01_B
(5) *1	LIN mode • LIN wake-up mode	→ LIN mode • LIN operation mode	OM1 and OM0 bits in RLN3nLCUC register = 11_B

Note 1. Transition between LIN operation mode and LIN wake-up mode cannot be made when communication is going on (when the FTS bit in the RLN3nLTRC register is 1).

(1) LIN Operation Mode

In LIN operation mode, frame processing (header transmission, header reception, response transmission, response reception, and error detection) can be performed.

During a transition from LIN reset mode to LIN mode, setting the OM1 and OM0 bits in the RLN3nLCUC register to 11_B changes the mode to LIN operation mode, changing the OMM1 and OMM0 bits in the RLN3nLMST register to 11_B. Communication settings should be performed after the OMM1 and OMM0 bits have become 11_B.

(2) LIN Wake-up Mode

In LIN wake-up mode, wake-up signal processing (wake-up transmission, wake-up reception, and error detection) can be performed.

During a transition from LIN reset mode to LIN mode, setting the OM1 and OM0 bits in the RLN3nLCUC register to 01_B changes the mode to LIN wake-up mode, changing the OMM1 and OMM0 bits in the RLN3nLMST register to 01_B. Communication settings should be performed after the OMM1 and OMM0 bits have become 01_B.

16.7.1 LIN Master Mode

16.7.1.1 Header Transmission

Figure 16.4 shows the operation of the LIN/UART interface (LIN master mode) in header transmission. **Table 16.59** provides processing in header transmission.

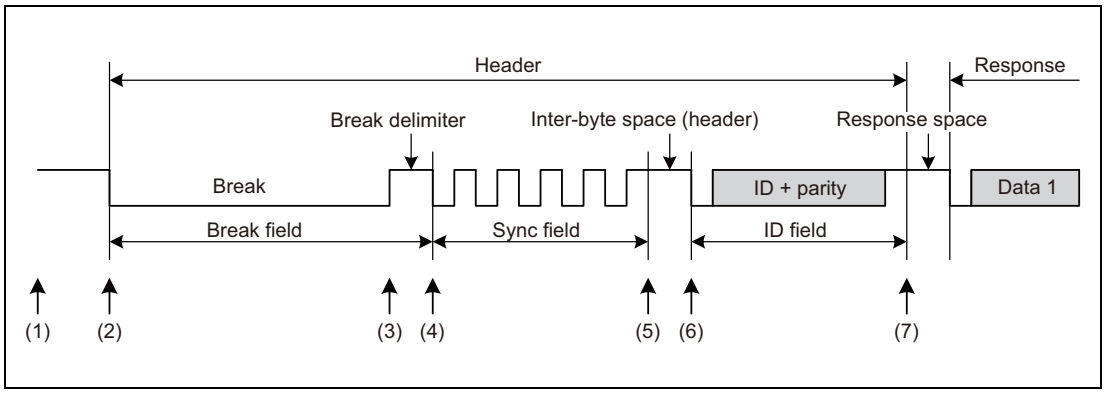

Figure 16.4 Operation in Header Transmission

Table 16.59 Processing in Header Transmission

	Software Processing	LIN/UART Interface Processing
(1)	• Sets a baud rate • Sets noise filter ON/OFF • Enables interrupt • Enables error detection • Sets frame configuration parameters • Changes the LIN/UART interface to the LIN master mode: LIN operation mode • Sets information on the frame to be transmitted (ID, parity, data length, response direction, Checksum method, and transmission data)	Waits for the setting of the FTS bit in the RLN3nLTRC register by software (idle)
(2)	Sets the FTS bit in the RLN3nLTRC register to 1 (frame transmission or wake-up transmission/reception started)	Transmits a break.
(3)	Waits for an interrupt request	Transmits a break delimiter.
(4)		Transmits a sync field (55_H).
(5)		Transmits an inter-byte space (header).
(6)		Transmits an ID field.
(7)		Sets a successful header transmission flag.

NOTE

For information about error detection conditions, see **Section 16.7.6, Error Status**.

16.7.1.2 Response Transmission

Figure 16.5 shows the operation of the LIN/UART interface (LIN master mode) in response transmission. **Table 16.60** provides processing in response transmission.

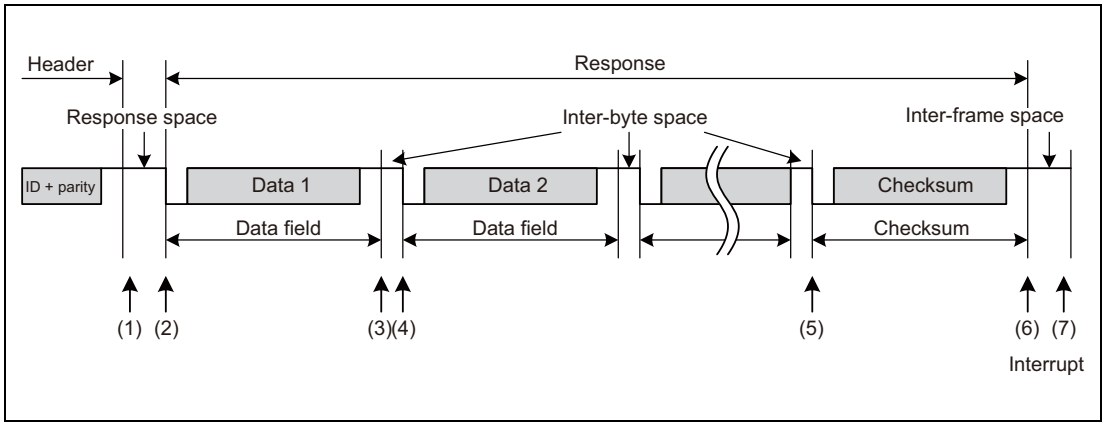

Figure 16.5 Operation in Response Transmission

Table 16.60 Processing in Response Transmission

	Software Processing	LIN/UART Interface Processing
(1)	[When in frame separate mode] • Sets the RTS bit in the RLN3nLTRC register to 1 (response transmission/ reception started) [When not in frame separate mode] • Waits for an interrupt request	[When in frame separate mode] • Waits for the setting of the RTS bit in the RLN3nLTRC register to 1 by software. • When the bit is set to 1, sends a response space. [When not in frame separate mode] • Sends a response space.
(2)	Waits for an interrupt request	Transmits data 1.
(3)		Transmits an inter-byte space.
(4)		• Transmits data 2. • Transmits an inter-byte space • Transmits data 3. • Transmits an inter-byte space (The transmission of an inter-byte space is repeated as many times as the data length specified in bits RFDL[3:0] in the RFC register. This is halted if the BER flag in the RLN3nLEST register is 1 (detection of a bit error). Process (5), checksum transmission, does not proceed if an error occurs). : :
(5)		Transmits the checksum.
(6)		• Sets a successful frame/wake-up transmission flag. Sets the FTS bit in the RLN3nLTRC register to 0 (frame transmission or wake-up transmission/reception stopped) [When in frame separate mode] • Set the RTS bit in the RLN3nLTRC register to 0 (response transmission/reception stopped).
(7)	• Processing after communication Checks the RLN3nLST register, and clears flags.	Idle

NOTE

For information about error detection, see **Section 16.7.6, Error Status**.

16.7.1.3 Response Reception

Figure 16.6 shows the operation of the LIN/UART interface (LIN master mode) on response reception. **Table 16.61** provides processing in response reception.

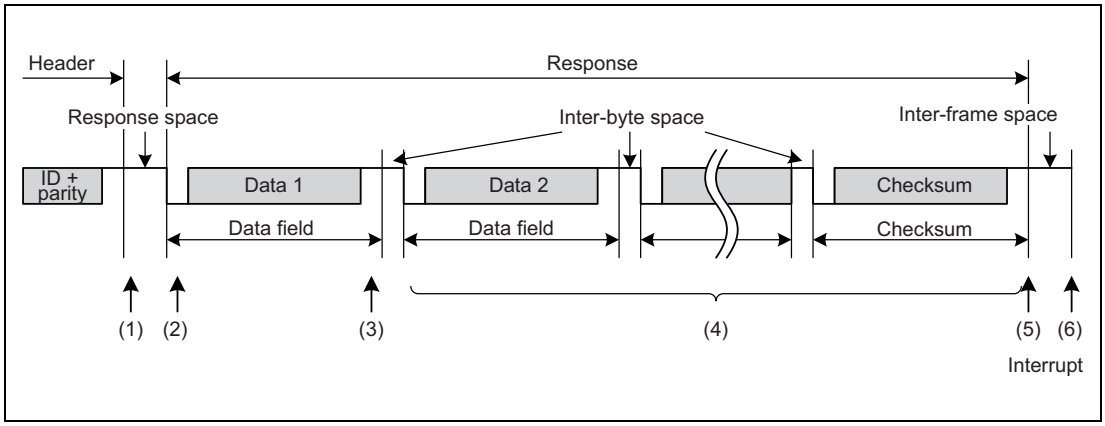

Figure 16.6 Operation in Response Reception

Table 16.61 Processing in Response Reception

	Software Processing	LIN/UART Interface Processing
(1)	Waits for an interrupt request (no processing)	Waits for detection of a start bit.
(2)		Receives data 1 when the start bit is detected.
(3)		Sets the successful data 1 reception flag.
(4)		• Receives data 2 when the start bit is detected. • Receives data 3 when the start bit is detected. (The transmission of an inter-byte space is repeated as many times as the data length specified in bits RFDL[3:0] in the RLN3nLDFC register. This is halted if any bit in the RLN3nLEST register is 1 (detection of any error). Process (5), checksum transmission, does not proceed if an error occurs). : : • Receives the checksum when the start bit is detected.
(5)		• Determines the checksum. • Sets the successful frame/wake-up reception flag. • Sets the FTS bit in the RLN3nLTRC register to 0 (frame transmission or wake-up transmission/reception stopped).
(6)	• Processing after communication Reads the received data. Checks the RLN3nLST register, and clears flags.	Idle

NOTE

For information about error detection, see **Section 16.7.6, Error Status**.

16.7.2 Data Transmission/Reception

16.7.2.1 Data Transmission

One bit of data is transmitted per 1 Tbit.

The data that is transmitted returns to the reception data input pin via the LIN transceiver. The received data and the transmitted data is compared bit by bit, and the results are stored in the BER flag in the RLN3nLEST register (see **Section 16.7.6, Error Status**).

In LIN master mode, 1 Tbit is generated to be 16/fLIN, and thus the sampling point for received data is at the 13th clock cycle (81.25% position).

Figure 16.7 shows an example of data transmission timing.

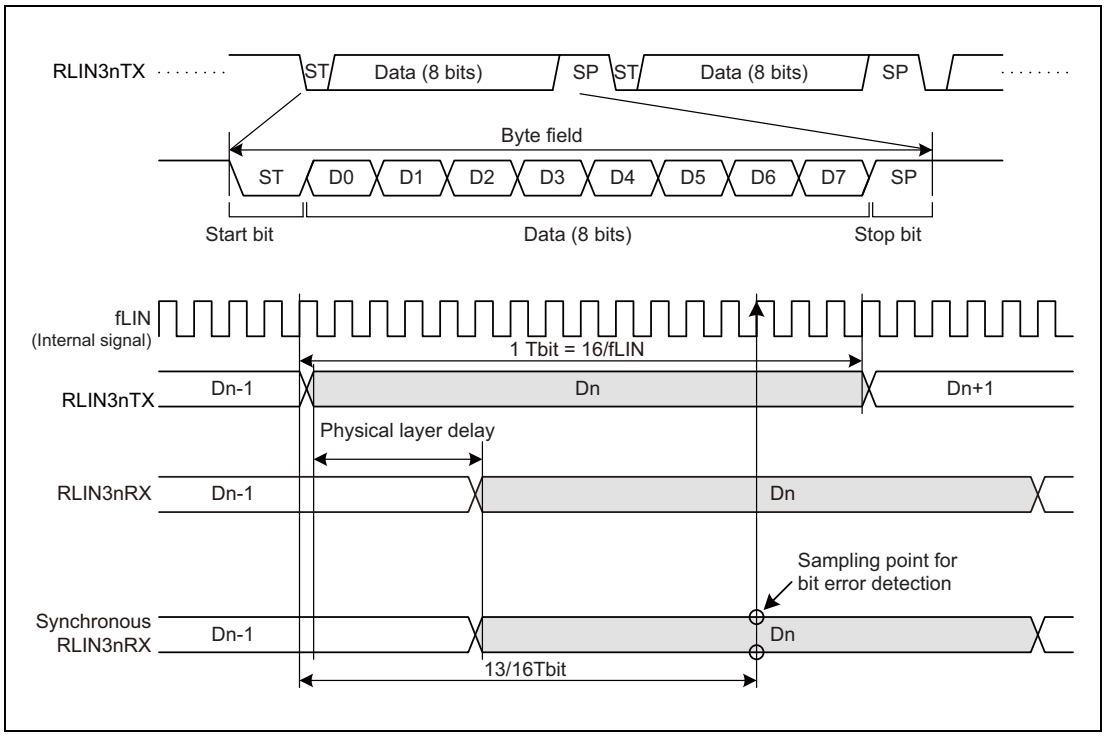

Figure 16.7 Example of Data Transmission Timing (LIN Master Mode)

16.7.2.2 Data Reception

Data reception is performed by using the synchronized RLIN3nRX signal (an internal signal) that is the input from the RLIN3nRX pin synchronized with prescaler clock.

The byte field is synchronized at the falling edge of the start bit for the synchronized RLIN3nRX signal. After the falling edge is detected, sampling is performed again 0.5 Tbit later, and the falling edge is recognized as a start bit if the synchronized RLIN3nRX signal is low level. The falling edge is not recognized as a start bit if the RLIN3nRX signal after the clearing of the resetting is low-level-fixed or if a high level is detected on re-sampling.

After the start bit is detected, the system samples 1 bit per Tbit.

The LIN/UART interface has a noise filter function with respect to reception data. If the LRDNFS bit in the RLN3nLMD register is 0, the LIN/UART interface uses a noise filter, and for a sampling value the value determined by a 3-sampling majority rule on prescaler clocks is used. If the LRDNFS bit in the RLN3nLMD register is 1, the LIN/UART interface does not use a noise filter, and for a sampling value the value of the synchronized RLIN3nRX value at the sampling position is used as is.

Figure 16.8 shows an example of data reception timing.

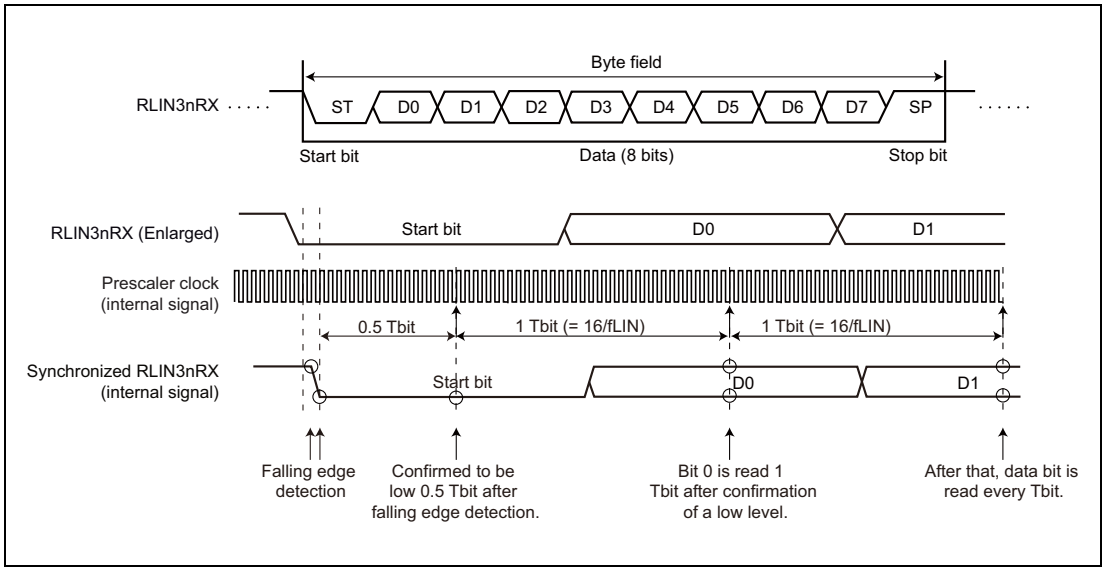

Figure 16.8 Example of Data Reception Timing (LIN Master Mode)

16.7.3 Transmission/Reception Data Buffering

This section explains the buffer processing that takes place when the LIN/UART interface sends or receives data continuously.

16.7.3.1 Transmission of LIN Frames

For an 8-byte transmission, the contents stored in registers RLN3nLDBR1 to RLN3nLDBR8 are sequentially transmitted to data areas 1 to 8 of the LIN frame. In the case of a 4-bytes transmission, the contents stored in registers RLN3nLDBR1 to RLN3nLDBR4 are transmitted to data areas 1 to 4 of the LIN frame, but the contents of registers RLN3nLDBR5 to RLN3nLDBR8 are not transmitted. The transmitted checksum data is stored in the RLN3nLCBR register.

Figure 16.9 depicts the LIN transmission processing and the required buffer.

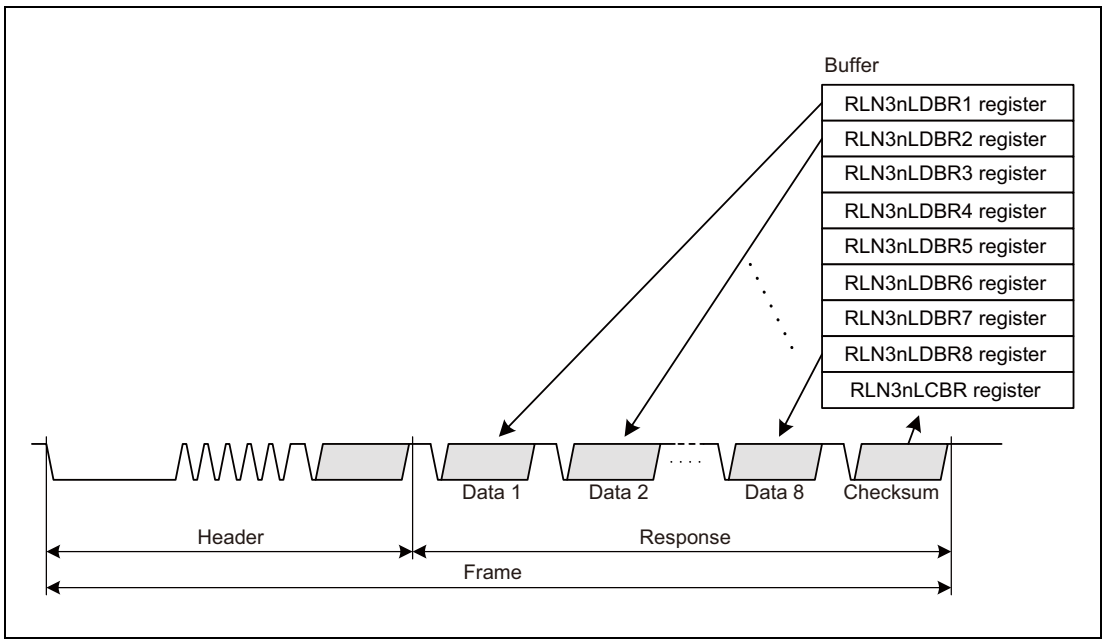

Figure 16.9 LIN Transmission Processing and Required Buffer

[Frame Separate Mode]

Setting the FSM bit in the RLN3nLDFC register to 1 turns on the frame separate mode.

In frame separate mode, a header and a response are transmitted when prompted by separate transmission start requests.

When the transmission of a header is finished, the HTRC flag in the RLN3nLST register turns 1 (successful header transmission).

Use frame separate mode when sending or receiving response data of 9 bytes or greater in LIN master mode.

16.7.3.2 Reception of LIN Frames

For an 8-byte reception, the contents of data areas 1 to 8 of the LIN frame is stored in registers RLN3nLDBR1 to RLN3nLDBR8, respectively, upon receipt of a stop bit. In the case of a 4-byte reception, the contents of data areas 1 to 4 of the LIN frame are stored in registers RLN3nLDBR1 to RLN3nLDBR4, respectively; however, no data is stored in registers RLN3nLDBR5 to RLN3nLDBR8. Also, the received checksum data is stored in the RLN3nLCBR register.

Figure 16.10 depicts the LIN reception processing and the required buffer.

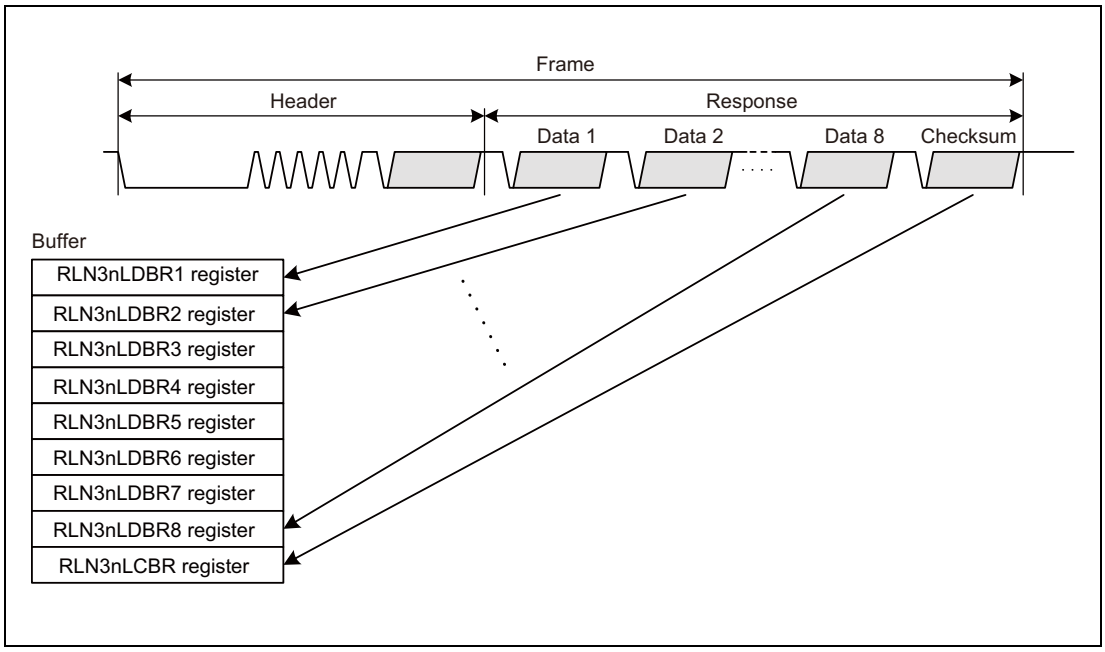

Figure 16.10 LIN Reception Processing and Required Buffer

[Reception of Data 1]

When the reception of the first byte of data is finished, the D1RC flag in the RLN3nLST register turns 1 (successful data 1 reception).

16.7.3.3 Multi-Byte Response Transmission/Reception Function

Normally in LIN communications, a response is 9 bytes or less including a checksum field; however, responses in 10 bytes or greater can also be sent and received.

In such a case, the bit error, framing error, response preparation error detection, and auto checksum functions are enabled.

If the data length is greater than 8 bytes, the LSS bit in RLN3nLDFC register should be set to 1 (indicating that the next data group to be sent or received is not the final data group) in the first data group (variable in 0 to 8 bytes) before sending or receiving the data group. After the transmission or reception, the user should determine whether the next data group is the final data group. If it is the final data group, the LSS bit should be set to 0 (indicating that the next data group to be sent or received is the final data group), and a checksum should be appended to the final data group.

By changing the RFDL bit in RLN3nLDFC register settings when the RTS bit in RLN3nLTRC register is 0, the user can change the data length for each data group.

When performing multi-byte response transmission/reception in LIN master mode, set the FSM bit in RLN3nLDFC register in the RLN3nLDFC register to 1 (frame separate mode).

16.7.4 Wake-up Transmission/Reception

The wake-up transmission/reception can be used in LIN wake-up mode.

16.7.4.1 Wake-up Transmission

In LIN wake-up mode, setting the RCDS bit in the RLN3nLDFC register to 1 (transmission) and the RFT bit in the RLN3nLDFC register to 1 (LIN master mode: response transmission) and the FTS bit in the RLN3nLTRC register to 1 (frame transmission or wake-up transmission/reception started) causes a wake-up signal to be output from the output pin. The low width of the wake-up signal should be set using the WUTL[3:0] bits in the RLN3nLWUP register.

However, if the LWBR0 bit of the RLN3nLWBR register in LIN master mode is 1 (LIN2.x use), the LIN system clock (fLIN) becomes low level width at fa regardless of the setting of the LCKS bit of the RLN3nLMD register. By setting the WUTL[3:0] bit of the RLN3nLWUP register to 0100_B (5 Tbits), 260 µs low width can be output in LIN wake-up mode regardless of the setting of the LCKS bit of the RLN3nLMD register.

If a wake-up low is output without any bit error, the FTC flag in the RLN3nLST register turns 1 (successful frame or wake-up transmission); when the FTCIE bit in the RLN3nLIE register is 1 (successful frame/wakeup transmission interrupt enabled), an interrupt request for RLIN3n transmission is generated.

If RLN3nLEDE.BERE is set and a bit error is detected, wake-up transmission is canceled and the BER flag in the RLN3nLEST register is set to 1 (bit error detection).

When RLN3nLEDE.PBERE is set in LIN master mode, set RLN3nLEST.PBER flag to 1 (physical bus error detection) at the same time of a bit error.

Figure 16.11 shows the wake-up transmission timing.

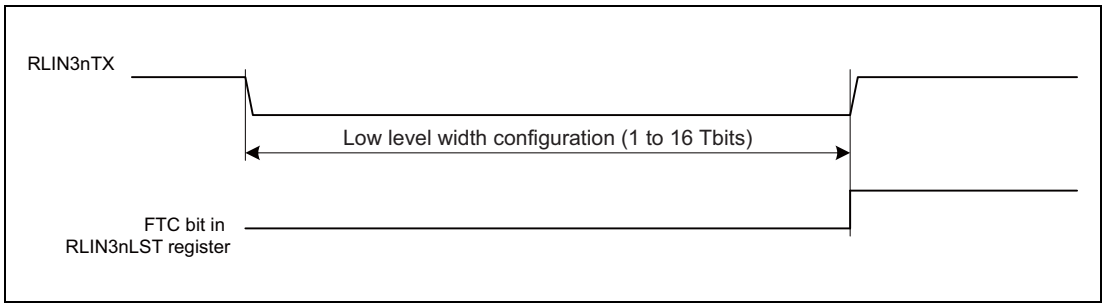

Figure 16.11 Wake-up Transmission Timing

16.7.4.2 Wake-up Reception

The detection of a wake-up involves the use of an input signal low level width count function. The input signal low level width count function measures the low level width of the input signal to the RLIN3nRX pin, using the same sampling point as data reception. This allows the 2.5-Tbit or longer low-level width of the input signal of fLIN to be measured.

In LIN master mode, by setting the LWBR0 bit in the RLN3nLWBR register, operation is executed without changing the baud rate generator setting at a transition between LIN operation mode and LIN wake-up mode.

When LIN Specification Package Revision 1.3 is used, set the LWBR0 bit in the RLN3nLWBR register to 0. When LIN Specification Package Revision 2.x is used, set the LWBR0 bit to 1. Setting the LWBR0 bit to 1 selects the LIN system clock (fLIN) to fa regardless of the setting of the LCKS bit in the RLN3nLMD register. (The LCKS bit is not changed). By setting the baud rate to 19200bps while fa is selected, the 130 µs or longer low-level width of the input signal to be measured regardless of the setting of the LCKS bit in the RLN3nLMD register.

When using this function, in LIN wake-up mode set the RFT bit in the RLN3nLDFC register to 0 (LIN master mode: response reception), or the FTS bit in the RLN3nLTRC register to 1 (frame transmission or wake-up transmission/reception started).

When the low level width to be measured is reached, the FRC flag in the RLN3nLST register turns 1 (successful frame/wake-up reception). If the FRCIE bit in the RLN3nLIE register is 1 (successful frame or wake-up reception interrupt enabled), an interrupt request for successful RLIN3n reception is generated.

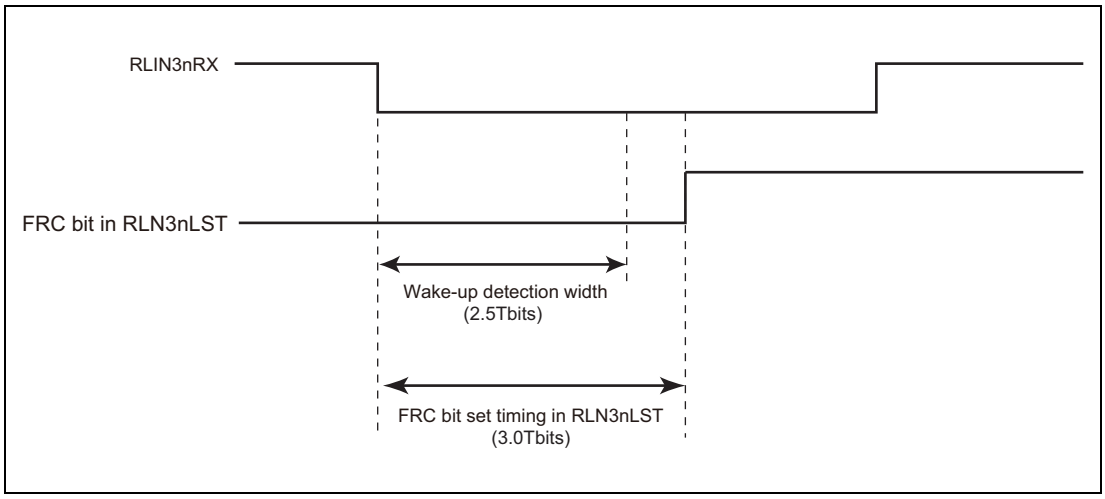

Figure 16.12 Input Signal Low level Count Function

16.7.4.3 Wakeup Collision

If the master node and the slave node transmit wakeup signals simultaneously, a collision will occur on the LIN bus, though a collision of wakeup signals is not detected in the LIN/UART interface.

16.7.5 Status

During LIN mode operation, the LIN/UART interface can detect seven types of statuses.

The four statuses, successful frame/wake-up transmission, successful frame/wake-up reception, error detection, successful header transmission/reception, can generate interrupt requests.

Table 16.62 shows the types of statuses available in LIN master mode.

Table 16.62 Types of Statuses in LIN Master Mode

Status	Status Set Condition	Status Clear Condition	Operation Mode Capable of Status Detection	Corresponding Bit	Interrupt
Reset	After the OM0 bit in the RLN3nLCUC register is set to not-LIN–reset-mode, if actually the LIN/UART interface is cleared from LIN reset mode.	After the OM0 bit in the RLN3nLCUC register is set to LIN reset mode, if actually the LIN/UART interface enters LIN reset mode.	All modes	OMM0 bit in RLN3nLMST register	—
Operation mode	After the OM1 bit in the RLN3nLCUC register is set to LIN operation mode, if actually the LIN/UART interface enters LIN operation mode.	After the OM1 bit in the RLN3nLCUC register is set to LIN wake-up mode, if actually the LIN/UART interface enters LIN wake-up mode.	• LIN operation mode • LIN wake-up mode	OMM1 bit in RLN3nLMST register	—
Frame/wake-up transmission end	When a frame (header transmission + response transmission), a wake-up signal, or a data group is transmitted successfully.	• When another communication is started (When the FTS bit in the RLN3nLTRC register is set) • When cleared by software • After transition to LIN reset mode	• LIN operation mode • LIN wake-up mode	FTC flag in RLN3nLST register	√
Frame/wake-up reception end	When a frame (header transmission + response reception), a wake-up signal, or a data group is received successfully.	• When another communication is started (When the FTS bit in the RLN3nLTRC register is set) • When cleared by software • After transition to LIN reset mode	• LIN operation mode • LIN wake-up mode	FRC flag in RLN3nLST register	√
Error detection	If any of the RPER flag, CSER flag, FER flag, FTER flag, PBER flag, and BER flags in the RLN3nLEST register turns 1 (error detected).	• When another communication is started (When the FTS bit in the RLN3nLTRC register is set) • When cleared by software*1 • After transition to LIN reset mode	• LIN operation mode • LIN wake-up mode	ERR flag in RLN3nLST register	√
Data 1 reception end	The RFT bit in the RLN3nLDFC register is 0 (reception) and the first byte of the response field or the first byte of each data group is received.*2	• When another communication is started (When the FTS bit in the RLN3nLTRC register is set) • When cleared by software • After transition to LIN reset mode	LIN operation mode	D1RC flag in RLN3nLST register	—
Header transmission end	When a header field is transmitted successfully.	• When another communication is started (When the FTS bit in the RLN3nLTRC register is set) • When cleared by software • After transition to LIN reset mode	LIN operation mode	HTRC flag in RLN3nLST register	√

Note 1. In LIN operation mode and LIN operation mode, the ERR flag in the RLN3nLST register is cleared to 0 by writing 0 to the RPER flag, CSER flag, FER flag, FTER flag, PBER flag, or BER flags in the RLN3nLEST register.

Note 2. Not detected when the RFDL [3:0] bits in the RLN3nLDFC register are 0000_B (0-byte + checksum).

16.7.6 Error Status

16.7.6.1 LIN Master Mode

(1) Types of Error Statuses

The LIN/UART interface can detect six types of error statuses in LIN master mode. The condition of these error statuses can be checked by means of the corresponding bits in the RLN3nLEST register.

All error statuses represent interrupt events.

Table 16.63 shows the types of error statuses.

Table 16.63 Types of Error Statuses in LIN Master Mode

Status	Error Detection Condition	Operation Mode Capable of Error Detection	Communication	Enable/ Disable Detection	Corresponding Bit
Bit error	The transmitted data and the data on the LIN bus monitored by the receive pin do not match *1*2	• LIN operation mode • LIN wake-up mode	Cancel	Enabled	BER flag in RLN3nLEST register
Physical bus error	• LIN bus is detected to be high level when sending a break • LIN bus is detected to be low level when sending a break delimiter • LIN bus is detected to be high level when sending a wake-up	• LIN operation mode • LIN wake-up mode	Cancel	Enabled	PBER flag in RLN3nLEST register
Timeout error	A frame or response transmission/reception does not terminate within a given time*3	LIN operation mode	Cancel	Enabled	FTER flag in RLN3nLEST register
Framing error	In response field reception, a stop bit of each data byte is low level	LIN operation mode	Cancel	Enabled	FER flag in RLN3nLEST register
Checksum error	In response field reception, the result of checksum test gives an error	LIN operation mode	—	Disabled	CSER flag in RLN3nLEST register
Response preparation error	One of the following conditions occurs in frame separate mode during a multi-byte response reception: • The first reception data byte is received after completion of header transmission but before a response transmission/reception request is set • The first reception data byte is received after the completion of previous data group reception before a transmission/reception request for another data group is set.	LIN operation mode	Cancel	Disabled	RPER flag in RLN3nLEST register

Note 1. If a bit error is detected, the process is canceled after a stop bit is sent. If a bit error is detected in a non-data area, such as an inter-byte space, the transmission is canceled immediately after that area. If a bit error is detected during the transmission of a wake-up, the transmission of the wake-up is canceled after the bit which had the error is sent.

Note 2. In a multi-byte response transmission, bit errors are detected also between data groups.

Note 3. The timeout time depends on the response field data length (the RFDL [3:0] bits in the RLN3nLDFC register) and the checksum selection (the CSM bit in the RLN3nLDFC register), and this can be calculated according to the following formula:
When the FSM bit in the RLN3nLDFC register is 1 (selecting frame separate mode), the time-out interval until setting of the RTS bit in the RLN3nLTRC register is the interval for receiving eight bytes of data. Once the RTS bit is set, the time-out time is reset to the time corresponding to the response field data length (determined by the RFDL[3:0] bits of the RLN3nLDFC register).
[Frame timeout]
On classic selection (when the CSM bit in RLN3nLDFC is 0): Timeout time = 49 + (number of data bytes + 1) × 14 [Tbit]
On enhanced selection (when the CSM bit in RLN3nLDFC is 1): Timeout time = 48 + (number of data bytes + 1) × 14 [Tbit]
The aforementioned timeout time is a time greater than the TFRAME_MAX of LIN Specification Package Revision 1.3 on classic selection, or the TFRAME_MAX of LIN Specification Package Revision 2.x on enhanced selection.

[Response timeout]
Timeout time = (number of data bytes + 1) × 14 [Tbit]

When en error is detected, time-out error detection function stops.

The error status is cleared when the next communication is started (when the FTS bit in the RLN3nLTRC register is set), by software, or at a transition to LIN reset mode.

(2) Target Time Area for LIN Error Detection

Figure 16.13 shows the time domain in which the LIN/UART interface in LIN master mode performs monitoring for error detection.

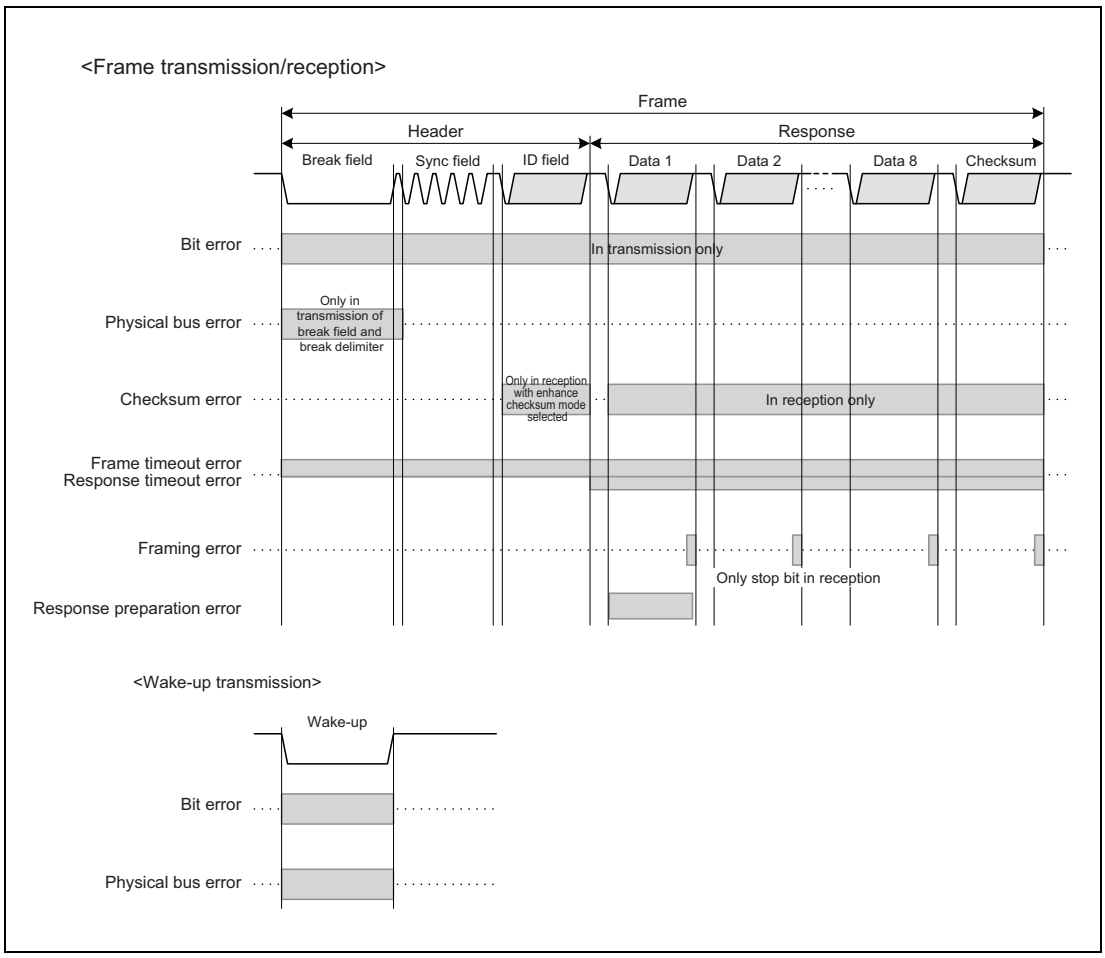

Figure 16.13 Target Time Area for LIN Error Detection (LIN Master Mode)

16.8 UART Mode

In LIN reset mode, setting the LMD bits in the RLN3nLMD register to 01_B (UART mode) and the OM0 bit in the RLN3nLCUC register to 1 changes the mode to UART mode, turning the OMM0 bit in the RLN3nLMST register to 1.

16.8.1 Transmission

Figure 16.14 shows LIN/UART interface (in UART mode) transmission operations; **Table 16.64** shows LIN/UART interface (in UART mode) transmission processing.

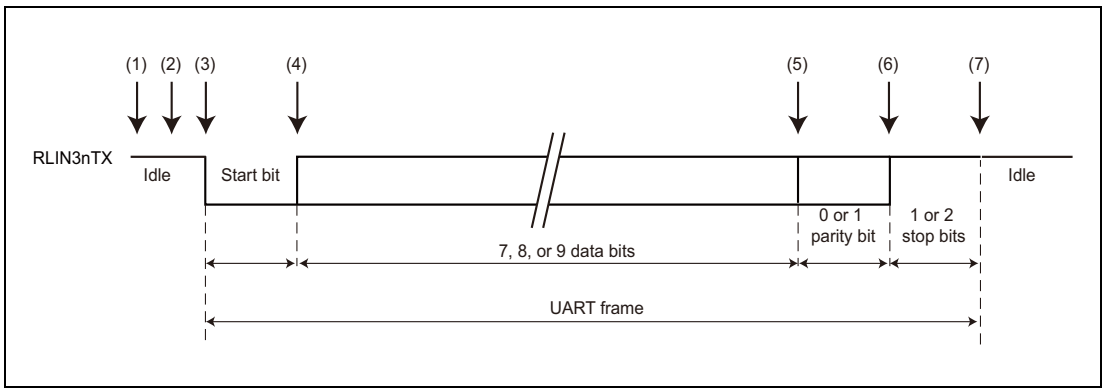

Figure 16.14 LIN/UART Interface (in UART Mode) Transmission Operation

Table 16.64 LIN/UART Interface (UART Mode) Transmission Processing (1/2)

	Software Processing	LIN/UART Interface Processing
(1)	• Sets a baud rate. • Sets noise filter ON/OFF. • Sets error detection enable. • Sets data format. • Sets an interrupt generation timing. • Clears the LIN/UART interface from LIN reset mode. • Sets the transmit enable bit (UTOE bit) to 1.	• Waits for a transmission trigger (RLN3nLUTDR register) by software.
(2)	• Sets the transmit data to the UART transmit data register (RLN3nLUTDR) or UART wait transmit data register (RLN3nLUWTDR).	• Sets the transmit status flag.
(3)	• Waits an interrupt request.	• Transmits a start bit (for switching between transmission and reception in half duplex communication, transmits a start bit after receiving 1 stop bit. For details about this function, see **Section 16.8.1.4, Transmission Start Wait Function**.
	[When the UTIGTS bit is 0 (a transmission interrupt request is generated upon start of transmission)]	[When the UTIGTS bit is 0 (a transmission interrupt is generated)]
	• When transmitting data continuously, sets another piece of transmission data in the UART transmit data register (RLN3nLUTDR register), waits for the generation of an interrupt request.	• Outputs a transmission interrupt.
(4)		Transmits the data set in the UART (for wait) transmit data register.
(5)		Transmits a parity bit when parity is used.
(6)		Transmits 1 or 2 stop bits.

Table 16.64 LIN/UART Interface (UART Mode) Transmission Processing (2/2)

	Software Processing	LIN/UART Interface Processing
(7)	[When the UTIGTS bit is 0 (a transmission interrupt request is generated upon start of transmission)] • If another piece of transmission data is set, goes to step (3).	[When the UTIGTS bit is 0 (a transmission interrupt request is generated upon start of transmission)] • If another piece of transmission data is set, goes to step (3). • If another piece of transmission data is not set, clears the transmit status flag.
	[When the UTIGTS bit is 1 (a transmission interrupt is output upon end of transmission)] • When transmitting data continuously, goes to step (2).	[When the UTIGTS bit is 1 (a transmission interrupt is output upon end of transmission)] • Generates a RLIN3n transmission interrupt request. • Clears the transmission status flag.

16.8.1.1 Continuous Transmission

The LIN/UART interface (in UART mode) can transmit multiple sets of data continuously by using the RLN3nLUTDR register. **Figure 16.15** shows an operation example where the transmission interrupt generation timing is the start of transmission and an operation example where the transmission interrupt generation timing is the end of transmission.

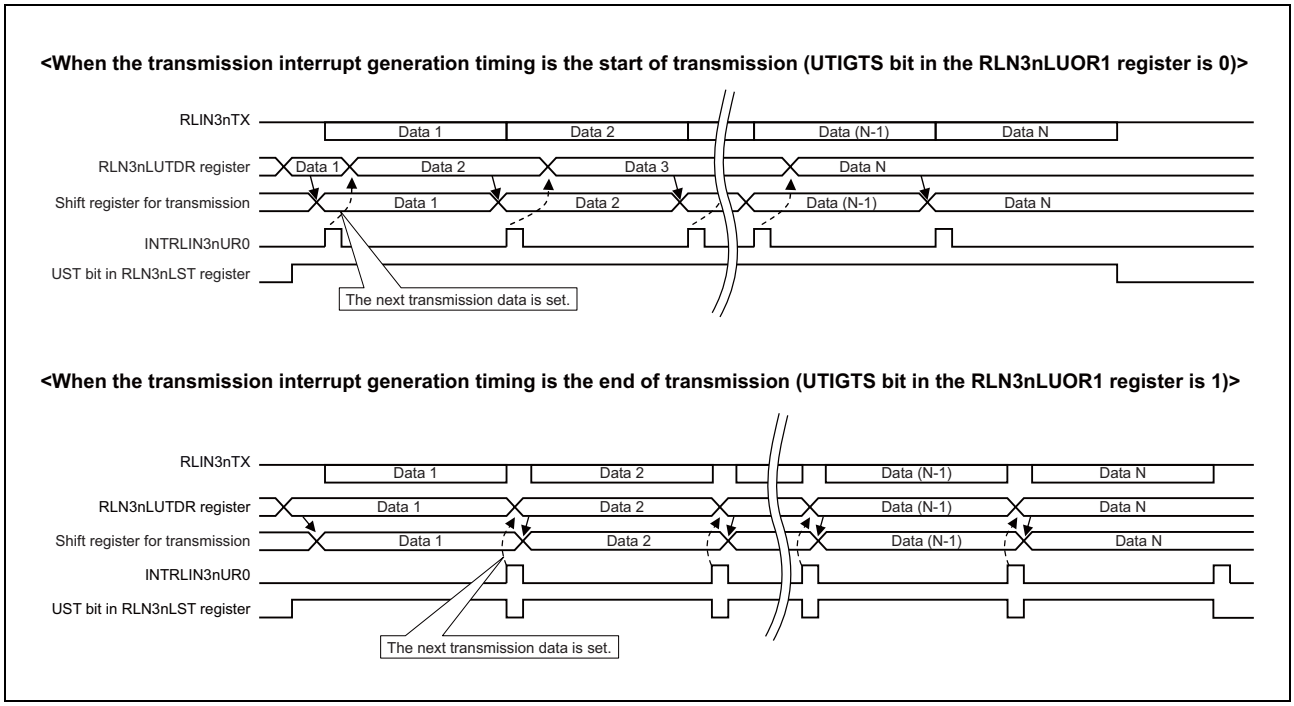

Figure 16.15 Operation Example of LIN/UART Interface (UART Mode) Continuous Transmission

An interrupt can be generated at the end of a transmission by changing the UTIGTS bit in the RLN3nLUOR1 register from 0 to 1 after the start of transmission of final data, provided only that the transmission interrupt generation timing is the start of transmission and the end of transmission of final data needs to be known.

16.8.1.2 UART Buffer Transmission

The LIN/UART interface (in UART mode) has a maximum of nine bytes of UART buffers, and thus it is capable of performing continuous transmissions through the use of UART buffers.

Figure 16.16 shows the UART buffer transmission operation in the LIN/UART interface (in UART mode). **Table 16.65** shows the UART buffer transmission processing.

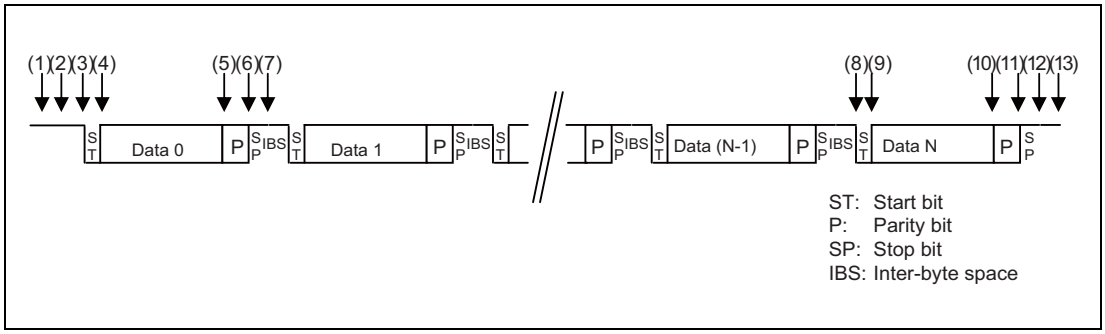

Figure 16.16 UART Buffer Transmission in LIN/UART Interface (in UART Mode)

Table 16.65 UART Buffer Transmission Processing in LIN/UART Interface (in UART Mode) (1/2)

	Software Processing	LIN/UART Interface Processing
(1)	• Sets a baud rate • Sets noise filter ON/OFF • Sets error detection enable • Sets data format • Sets an interrupt generation timing to the end of transmission. • Clears the LIN/UART interface from LIN reset mode. • Sets the transmit enable bit (UTOE bit) to 1	• Waits for a transmission trigger (RTS bit) by software
(2)	• Sets the UART buffer data length and whether the system must wait for the start of transmission. • Sets the transmission data in the UART data 0 buffer register (RLN3nLUDB0) and the LIN data buffer m register (RLN3nLDBRb). (b =1 to 8) • Sets the UART buffer transmission start bit (RTS).	• Sets the transmit status flag.
(3)	Waits for an interrupt request.	Transmits a start bit. (When switching from reception to transmission during half-duplex communication, transmits the start bit upon completion of the stop bit for reception. For details about this function, see **Section 16.8.1.4, Transmission Start Wait Function**.)
(4)		Transmits the data set in the UART data buffer 0 register (RLN3nLUDB0) and the LIN/UART data buffer b register (RLN3nLDBRb).
(5)		Transmits a parity bit when parity is used.
(6)		Transmits 1 or 2 stop bits (When the number of data set in UART buffer data length setting bit is 1, proceed to (12).)
(7)		Transmits an inter-byte space (idle).
		Repeats steps (3) to (7) until the number of data -1 that was set in the UART buffer data length select bits is reached.

Table 16.65 UART Buffer Transmission Processing in LIN/UART Interface (in UART Mode) (2/2)

	Software Processing	LIN/UART Interface Processing
(8)		Transmits a start bit.
(9)		Transmits the data set in the LIN/UART data buffer b register (RLN3nLDBRb).
(10)		Transmits a parity bit when parity is used.
(11)		Transmits 1 or 2 stop bits.
(12)		• Sets the buffer transmission end flag. • Clears the UART buffer transmit start bit (RTS). • A transmission interrupt request signal. • Clears the transmission status flag.
(13)	• Checks the RLN3nLST register, and clears flags • In the case of continuous data transmission, goes to step (2).	

(1) UART Buffer Transmission

For a 9-byte transmission, the contents stored in the RLN3nLUDB0 and RLN3nLDBR1 to RLN3nLDBR8 registers are transmitted to data areas 0 to 8. The RLN3nLUDB0 register is used only if 9-byte transmission is set. In other cases, the RLN3nLDBR1 to RLN3nLDBR8 registers are selected depending upon the length of data involved. For a 4-byte transmission, the contents stored in the RLN3nLDBR1 to RLN3nLDBR4 registers are transmitted to data areas 1 to 4, but the contents of the RLN3nLDBR5 to RLN3nLDBR8 registers are not transmitted. An RLIN3n transmission interrupt is generated after the transmission of the data that is set in the MDL [3:0] bits of the RLN3nLDFC register. The spaces between transmission data items can be set in the IBS bit in the RLN3nLSC register.

Figure 16.17 shows a 9-byte UART buffer and the transmission processing.

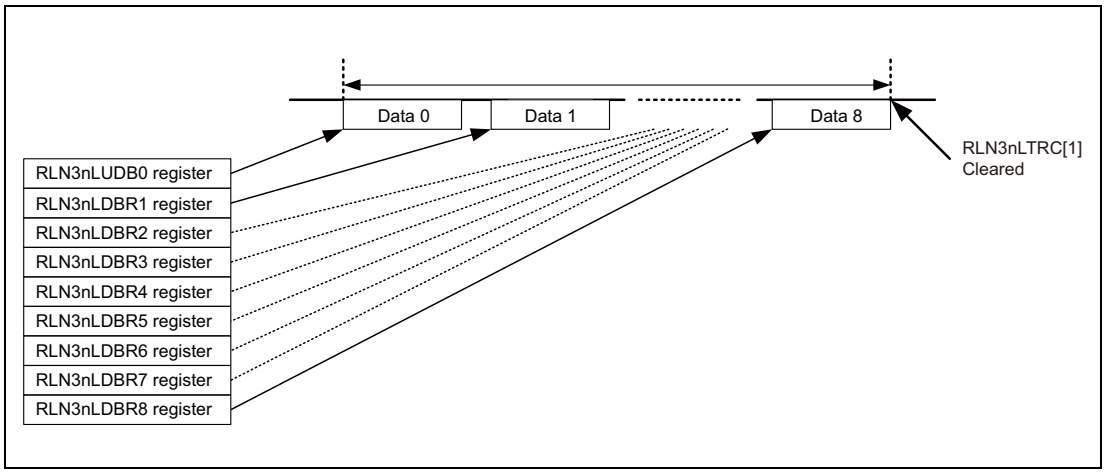

Figure 16.17 UART Buffer and Transmission Processing (for 9-Byte Transmission)

16.8.1.3 Data Transmission

One bit of data is transmitted per Tbit.

In half-duplex communication, if the BERE bit in the RLN3nLEDE register is 1 (bit error detection enabled), the transmission data and the input pin level are compared bit by bit during data transmission, and the results are stored in the BER flag in the RLN3nLEST register (see **Section 16.8.5, Error Status**). The timing at which the input pin is sampled during data transmission can vary depending upon the settings of the LPRS[2:0] and NSPB[3:0] bits in the RLN3nLWBR register.

The bit error detection timing in UART mode is shown in **Table 16.66**.

Table 16.66 Error Detection Timing in UART Mode

Sampling Count Per Bit	Bit Error Detection Timing
6 samples	3rd clock cycle + 1 prescaler clock
7 samples	4th clock cycle + 1 prescaler clock
8 samples	4th clock cycle + 1 prescaler clock
9 samples	5th clock cycle + 1 prescaler clock
10 samples	5th clock cycle + 1 prescaler clock
11 samples	6th clock cycle + 1 prescaler clock
12 samples	6th clock cycle + 1 prescaler clock
13 samples	7th clock cycle + 1 prescaler clock
14 samples	7th clock cycle + 1 prescaler clock
15 samples	8th clock cycle + 1 prescaler clock
16 samples	8th clock cycle + 1 prescaler clock

Example of Data Transmission Timing (when 1 Tbit = 16 Sampling) is shown in **Figure 16.18**

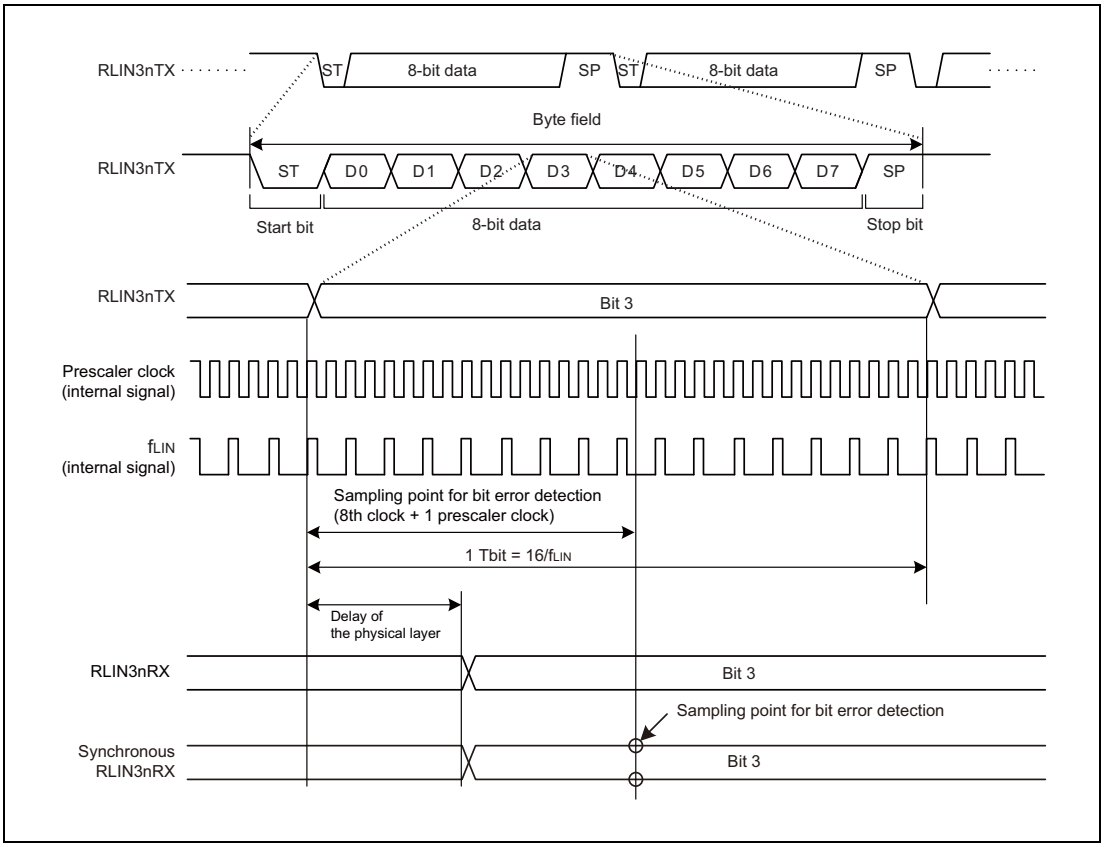

Figure 16.18 Example of Data Transmission Timing (When 1 Tbit = 16 Sampling)

16.8.1.4 Transmission Start Wait Function

For performing half-duplex communication, the LIN/UART interface (in UART mode) has the function of securing the reception stop bit length when switching from reception to transmission.

If it is desired to delay the start of transmission until the stop bits for the reception are completed, set data in the RLN3nLUWTDR register, which is used only for the wait function, instead of setting transmission data in the RLN3nLUTDR register as a start-of-transmission request. When transmitting from the UART buffer, set 1 (UART buffer transmission started) in the RTS bit in the RLN3nLTRC register with 1 set in the UTSW bit in the RLN3nLDFC register.

In such a case, the LIN/UART interface delays the start of transmission until the stop bits of reception data are completed.

It should be noted that even if the UART stop bit length select bit (USBLS) in RLN3nBLFC register is 1 (stop bits = 2 bits), delay is made only for 1 bits.

Figure 16.19 shows the operation of transmission wait function.

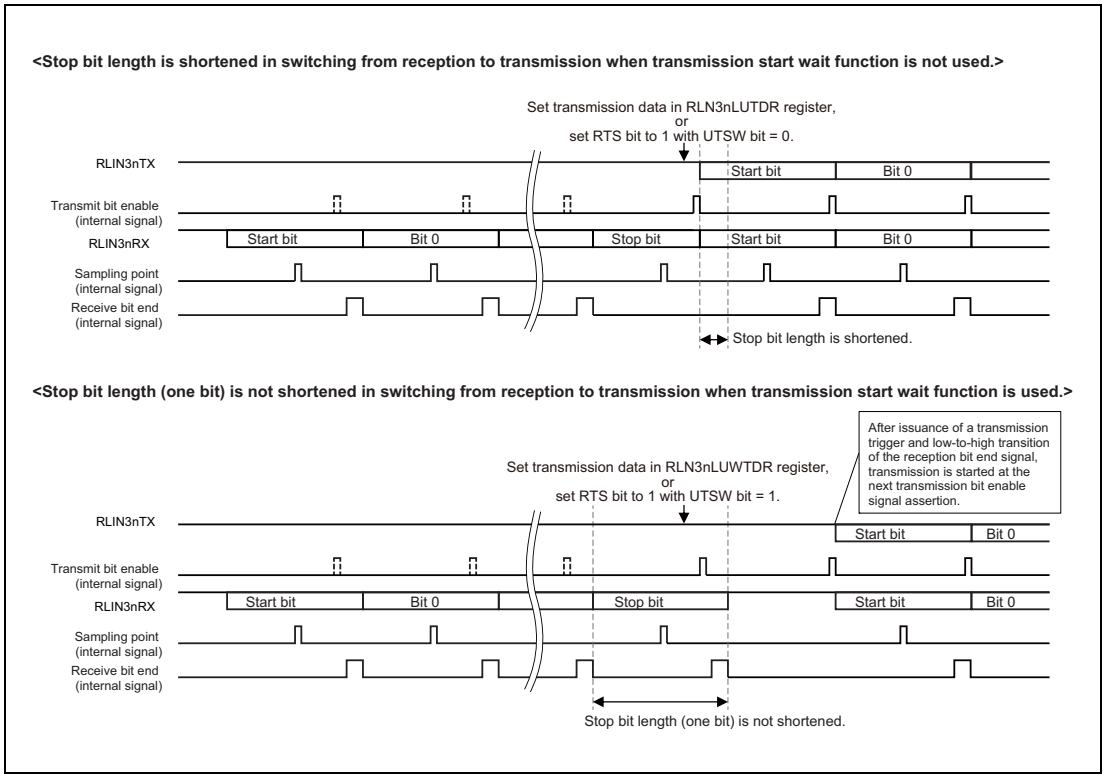

Figure 16.19 Transmission Wait Function (If Transmission Data is Set during the Stop Bits in the Received Data)

16.8.2 Reception

Figure 16.16 shows the LIN/UART interface (in UART mode) reception operation. **Table 16.67** shows the LIN/UART interface (in UART mode) reception processing.

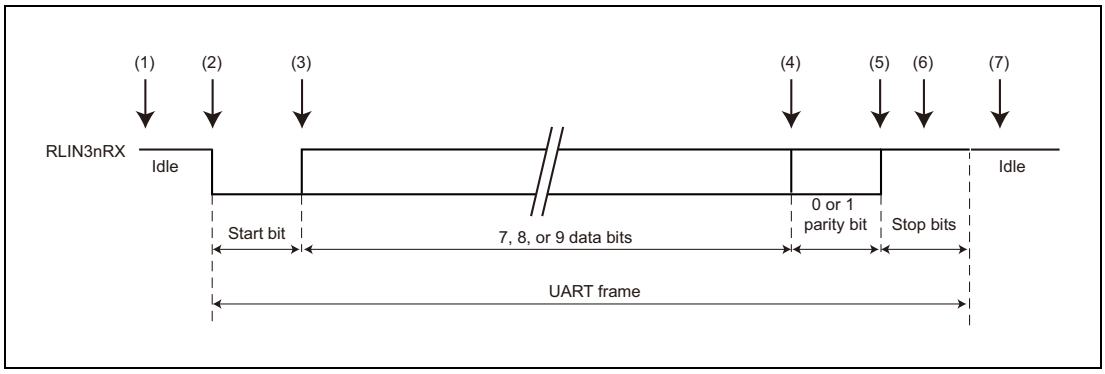

Figure 16.20 LIN/UART Interface (in UART Mode) Reception Operation

Table 16.67 LIN/UART Interface (in UART Mode) Reception Processing

	Software Processing	LIN/UART Interface Processing
(1)	• Sets a baud rate. • Sets noise filter ON/OFF. • Sets error detection enable. • Sets data format. • Clears the LIN/UART interface from LIN reset mode. • Sets the receive enable bit (UROE bit) to 1.	• Waits for reception enable state switching by software. • Waits for detection of a start bit.
(2)	Waits for an interrupt request.	• Waits for a falling edge from the reception pin, and detects a start bit. • Sets the reception status flag.
(3)		Receives data.
(4)		Receives a parity bit when parity is used.
(5)		Receives only 1 stop bit.
(6)		• Generates a RLIN3n reception complete interrupt request. • Clears the reception status flag.
(7)	Checks the RLN3nLST register, and clears flags	Waits for a falling edge from the reception pin.

16.8.2.1 Data Reception

Data reception is performed by using the synchronized RLIN3nRX (an internal signal) that is the input from the RLIN3nRX pin synchronized with the prescaler clock.

The byte field is synchronized at the falling edge of the start bit for the synchronized RLIN3nRX signal. After the falling edge is detected, resampling is performed 0.5 Tbits later when the number of the sampling per 1 Tbit is even and {(the number of the sampling + 1) / 2} / (the number of sampling) Tbits later when the number is odd. If the synchronized RLIN3nRX signal is low level, the bit is recognized as a start bit. The bit is not recognized as a start bit if the RLIN3nRX signal is fixed at low level after the reset is cleared or if a high level is detected during the resampling.

After the start bit is detected, 1 bit is sampled per Tbit.

However, when the BERE bit in the RLN3nLEDE register is 1, the sampling point is the same as the bit error detection timing.

The LIN/UART interface has a noise filter function with respect to received data. If the LRDNFS bit in the RLN3nLMD register is 0, the noise filter is used. For a sampling value, the value determined by a 3-sampling majority rule by the prescaler clock is used. If the LRDNFS bit in the RLN3nLMD register is 1, the noise filter is not used. In this case, for a sampling value, the synchronized RLIN3nRX value at the sampling position is used as is.

Figure 16.21 shows an example of data reception timing.

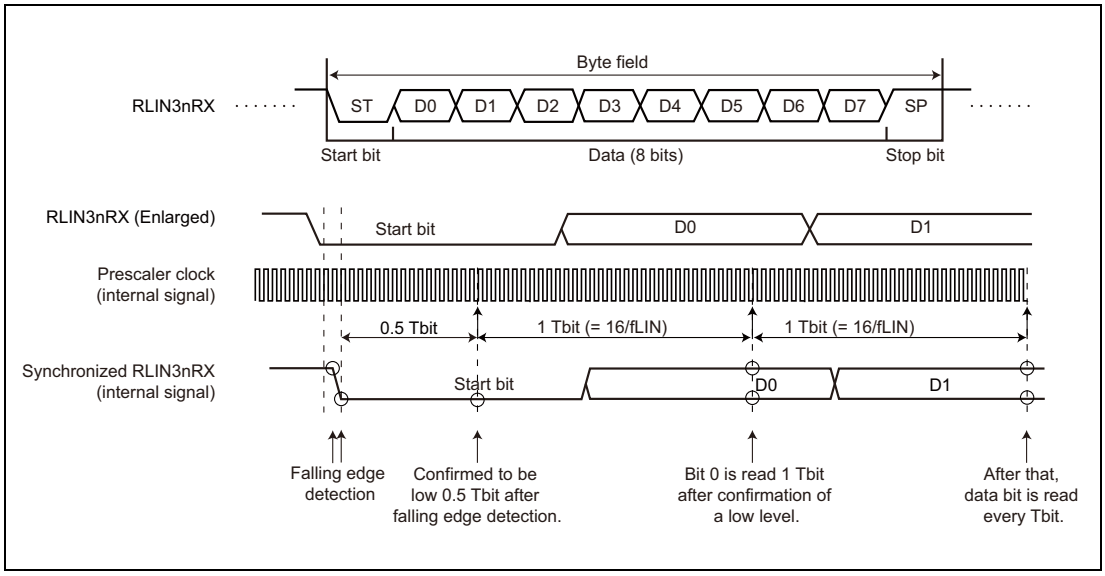

Figure 16.21 Example of Data Reception Timing (When Sampling Count is 16 in 1 Tbit)

16.8.3 Expansion Bits

The LIN/UART interface (in UART mode) can transmit and receive 9-bit long data by setting the UEBE bit in the RLN3nLUOR1 register to 1.

16.8.3.1 Expansion Bit Transmission

The LIN/UART interface (in UART mode) can transmit 9-bit long data when the expansion bit enable bit (UEBE) in the UART option register 1 (RLN3nLUOR1) is 1 and by writing the 9-bit data to either the UART transmission data register (RLN3nLUTDR) or the UART wait transmission data register (RLN3nLUWTDR).

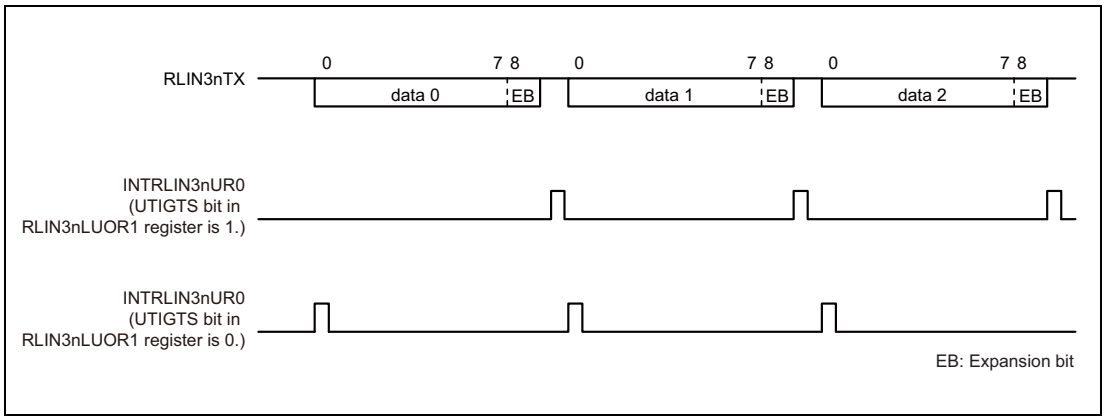

Figure 16.22 Transmission Example When Expansion Bit is Enabled (LSB First)

16.8.3.2 Expansion Bit Reception

With the LIN/UART interface (in UART mode), 9-bit data can always be received without requiring a comparison of expansion bits, provided that the expansion bit enable bit (UEBE) in the UART option register 1 (RLN3nLUOR1) is 1, the expansion bit comparison disable bit (UECD) is 1, and the expansion bit data comparison enable bit (UEBDCE) is 0. Irrespective of the particular setting of the expansion bit detection level select bit (UEBDL) in the UART option register 1 (RLN3nLUOR1), a successful RLIN3n reception interrupt is generated when 9-bit data is received.

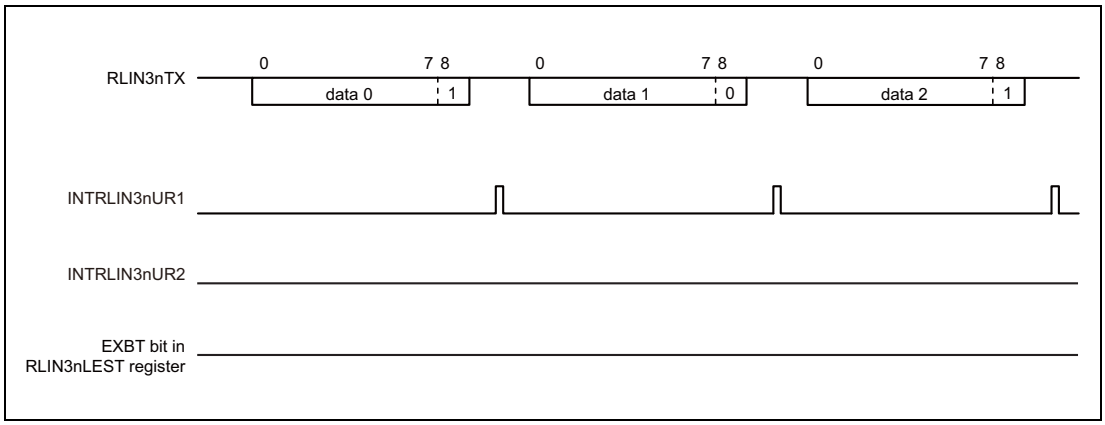

Figure 16.23 Expansion Bit Reception Example (LSB First)

16.8.3.3 Expansion Bit Reception (with Expansion Bit Comparison)

The LIN/UART interface (in UART mode) can compare received expansion bits and the UEBDL bits when the expansion bit enable bit (UEBE) in the UART option register 1 (RLN3nLUOR1) is 1 and the expansion bit comparison disable bit (UECD) is 0 and the expansion bit/data comparison enable bit (UEBDCE) is 0.

If the level that was set in the expansion bit detection level select bit (UEBDL) is detected, an RLIN3n status interrupt request is generated upon completion of data reception, and the expansion bit detection flag (EXBT) in the LIN error status register (RLN3nLEST) is set. If the reversed value of an expansion bit detection level is detected, a RLIN3n reception complete interrupt request is generated. In either case, the received data is stored in the UART reception data register (RLN3nLURDR), unless there was an overrun error.

Figure 16.24 shows an example when the expansion bit detection level select bit (UEBDL) is set to 0.

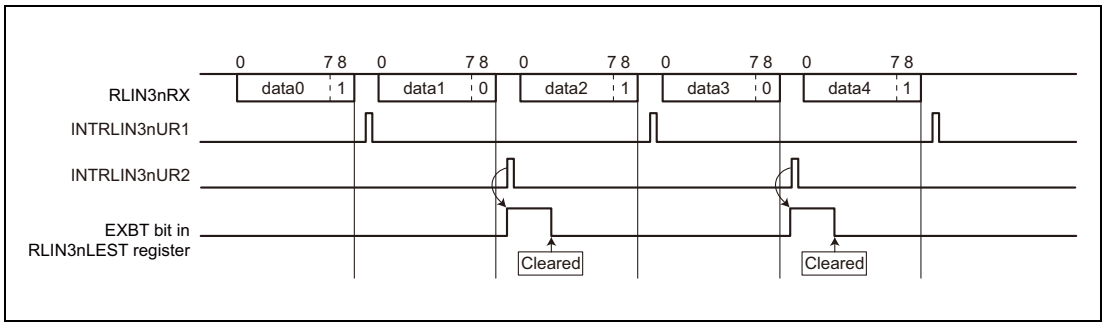

Figure 16.24 Expansion Bit Reception Example (with Expansion Bit Comparison) (LSB First, UEBDL = 0)

NOTE

- If a reception error (parity error, framing error, or overrun error) occurs in received data 0, 2, or 4 (if a reversed value of an expansion bit detection level is detected), an RLIN3n status interrupt is generated, and the error flag is updated. In this case, a successful RLIN3n reception interrupt is not generated.
- If a reception error (parity error, framing error, or overrun error) occurs in received data 1 or 3 (if an expansion bit detection level is detected), an RLIN3n status interrupt is generated, and the error flag is updated. If the overrun error occurs, the expansion bit detection flag (EXBT) is also set.

16.8.3.4 Expansion Bit Reception (with Data Comparison)

If the expansion bit enable bit (UEBE) in the UART option register 1 (RLN3nLUOR1) is 1 and the expansion bit comparison disable bit (UECD) is 0 and the expansion bit/data comparison enable bit (UEBDCE) is 1, and if the level that was set by the expansion bit detection level select bit (RLN3nUEBDL) is detected, the LIN/UART interface compares the 8 bits, exclusive of the expansion bit in the received data, with the a pre-set RLN3nLIDB register value.

If the result of the comparison is a match, the LIN/UART interface performs the following operations:

- Generates an RLIN3n status interrupt
- Sets an expansion bit detection flag (EXBT)
- Sets an ID match flag (IDMT)
- Stores the received data in the UART reception data register (RLN3nLURDR)

Even when the result of the comparison is a match, a successful RLIN3n reception interrupt is not generated.

If the result of the comparison is not a match, no successful RLIN3n reception interrupt or RLIN3n status interrupt is generated, and the EXBT and IDMT flags are not set to 1. The received data is not stored in the UART reception data register (RLN3nLURDR).

When changing the UEBDCE bit to 0, make the change before the reception of another set of data is finished.

Figure 16.25 shows an example when the expansion bit detection level select bit (UEBDL) is set to 0.

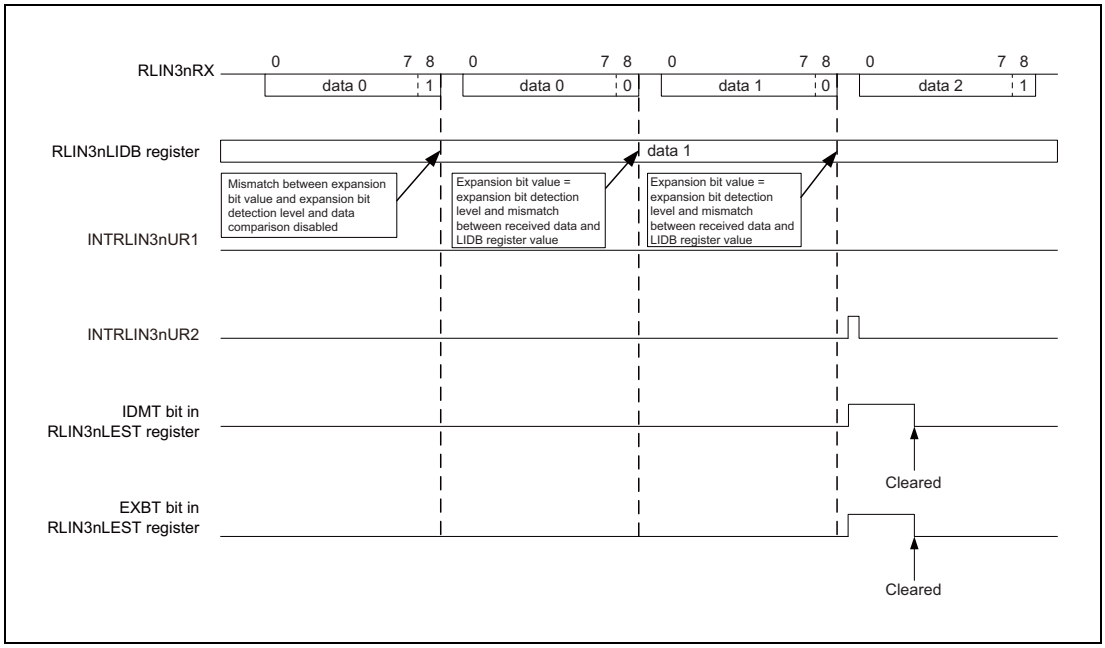

Figure 16.25 Expansion Bit Reception Example (with Data Comparison) (LSB First, UEBDL = 0)

NOTE

When a reception error (parity, framing, or overrun) occurs, a status interrupt of RLIN3n is generated and the error flag is updated. When the overrun error occurs and the comparison result matches, the EXBT and IDMT flags are also set.

16.8.4 Status

In UART mode, the LIN/UART interface can detect five types of statuses.

Two statuses, successful UART buffer transmission and error detection, can generate interrupt requests.

Table 16.68 shows the types of statuses available in UART mode.

Table 16.68 Types of Statuses in UART Mode

Status	Status Set Condition	Status Clear Condition	Corresponding Bit	Interrupt
Reset	After the OM0 bit in the RLN3nLCUC register is set to not-LIN–reset-mode, if actually the LIN/UART interface is cleared from LIN reset mode.	After the OM0 bit in the RLN3nLCUC register is set to LIN reset mode, if actually the LIN/UART interface enters LIN reset mode.	OMM0 bit in RLN3nLMST register	—
Successful UART buffer transmission	• When the UTIGTS bit in the RLN3nLUOR1 register is 0 (transmission interrupt request is generated upon start of transmission), the transmission of the last data of the data length set by the MDL bit in the RLN3nLDFC register is started. • When the UTIGTS bit in the RLN3nLUOR1 register is 1 (transmission interrupt request is generated upon end of transmission), the transmission of the data length set by the MDL bit in the RLN3nLDFC register is ended.	• When cleared by software • After transition to LIN reset mode	FTC flag in RLN3nLST register	√
Error detection	If any of the UPER flag, IDMT flag, EXBT flag, FER flag, OER flag, and BER flags in the RLN3nLEST register turns 1 (error detected).	• When cleared by software*1 • After transition to LIN reset mode	ERR flag in RLN3nLST register	√
Transmission status	• When data is written to the RLN3nLUTDR or RLN3nLUWTDR register. • When a 1 is written to the RTS bit in the RLN3nLTRC register.	• The transmission of the data set in the RLN3nLUTDR or RLN3nLUWTDR register is complete, but another transmission data item is not set • The transmission of the data in the UART buffer is complete, and the RTS bit in the RLN3nLTRC register is cleared • After transition to LIN reset mode	UTS flag in RLN3nLST register	—
Reception status	• When a start bit is detected.	• When a sampling point for stop bits is detected • After transition to LIN reset mode	URS flag in RLN3nLST register	—

Note 1. Writing a 0 to the UPER, IDMT, EXBT, FER, OER, and BER flags in the RLN3nLEST register when the LIN reset mode is being canceled turns the ERR flag in the RLN3nLST register to 0.

16.8.5 Error Status

Types of Error Statuses

In UART mode, the LIN/UART interface can detect four types of errors and two types of statuses. The condition of these statuses can be checked by means of the corresponding bits in the RLN3nLEST register.

Table 16.69 lists applicable status types.

Table 16.69 Types of Statuses in UART Mode

Status	Error Detection Condition	Communication	Enable/ Disable Detection	Corresponding Bit
Bit error	The transmitted data and the data monitored on the receive pin do not match*1	Continues until the transmission of the set transmission data is finished.	Enabled	BER flag in RLN3nLEST register
Overrun error	After received data is stored in the RLN3nLURDR register, another data item is received before the data is read. (In this case, no data is stored in the RLN3nLURDR register).	— (Reception is finished by the time this error is detected)	Enabled	OER flag in RLN3nLEST register
Framing error	When the first stop bit is low level in the reception processing.	— (Reception is finished by the time this error is detected)	Enabled	FER flag in RLN3nLEST register
Parity error	The received parity value fails to match the parity value calculated from the received data	Continues until the data reception is finished.	Disabled *2	UPER flag in RLN3nLEST register
Expansion bit detection	The value of the received expansion bit matches the value of the UEBDL bit in the RLN3nLUOR1 register.	—	Enabled	EXBT flag in RLN3nLEST register
ID match detection	The value of the received expansion bit matches the value of the UEBDL bit in the RLN3nLUOR1 register and the 8-bit receive data excluding the expansion bit matches the value of the RLN3nLIDB register.	—	Enabled	IDMT flag in RLN3nLEST register

Note 1. In the case of transmission from the UART buffer, bit errors are detected even in the space between UART frames (inter-byte space).

Note 2. Setting the UPS[1:0] bits in the RLN3nLBFC register to 10_B (0 parity) disables the checking of parity bit values. In this case, no parity error is generated.

The error status is cleared by software or at a transition to LIN reset mode.

16.9 LIN Self-Test Mode

When the LIN/UART interface enters the LIN self-test mode, RLIN3nTX and RLIN3nRX are disconnected from external pins and RLIN3nTX and RLIN3nRX are connected in the LIN/UART interface. Therefore, the frame transmitted from RLIN3nTX is looped back to RLIN3nRX. The LIN self-test mode can perform tests exclusively in LIN mode.

The self-test can be performed in the following two types.

- LIN master self-test mode (transmission): Header transmission and response transmission
- LIN master self-test mode (reception): Header transmission and response reception

In LIN self-test mode, the operate is at the fastest baud rate, regardless of the setting of the baud rate generator.

Regardless of the setting of the baud rate related registers, the baud rate operates at the LIN communication clock source/16 [bps]. (The NSPB bits in the RLN3nLWBR register should be set to 0000_B or 1111_B.)

In addition, in LIN self-test mode, the following functions are not supported.

- LIN wake-up mode
- Frame separate mode
- Multi-byte response transmission/reception
- Frame/response timeout error

Do not use these functions.

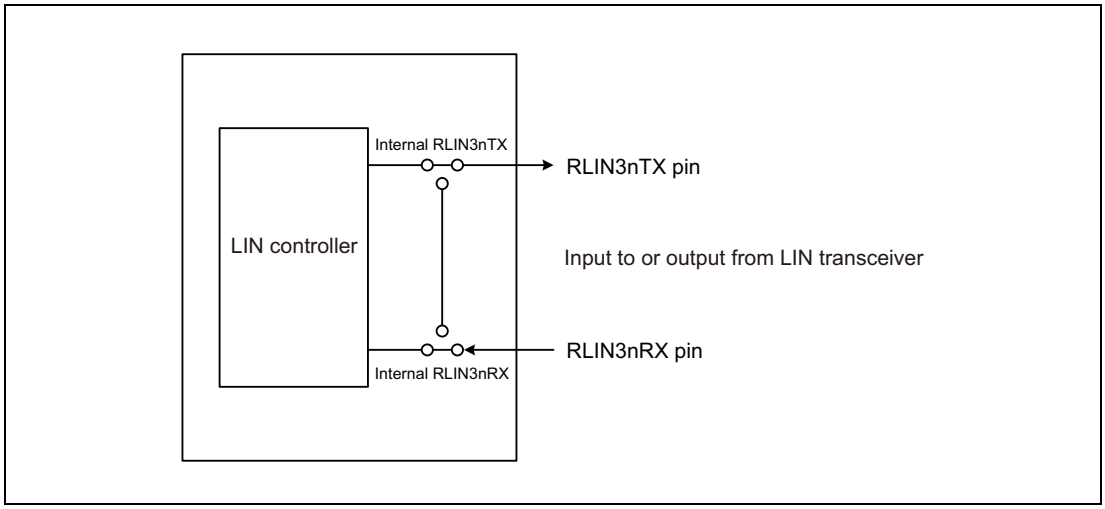

Figure 16.26 Connection in LIN Reset Mode, LIN Mode, and UART Mode

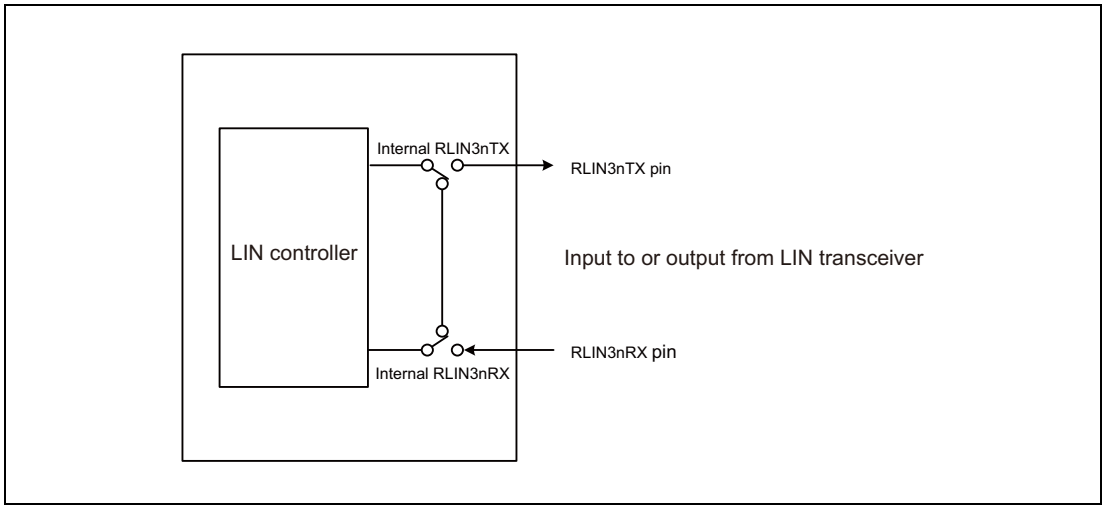

Figure 16.27 Connection in LIN Self-Test Mode

16.9.1 Change to LIN Self-Test Mode

Writing to the RLN3nLSTC register makes a transition to the LIN self-test mode.
When the LSTM bit in the RLN3nLSTC register is set to 1, the shift to the LIN self-test mode is checked.

When changing to LIN self-test mode, be sure to execute a specific sequence. In that sequence, information must be written three times consecutively to the LIN self-test control register, as follows:

- Change to LIN reset mode
  Set the OM0 bit in the RLN3nLCUC register to 0 (LIN reset mode).
  Read the OMM0 bit in the RLN3nLMST register; verify that it is 0 (LIN reset mode).
- Select a LIN mode
  LMD bits in RLN3nLMD = 00_B (LIN master mode)
  1st write: RLN3nLSTC register = 1010 0111 ($A7_H$)
- 2nd write: RLN3nLSTC register = 0101 1000 (58_H)
- 3rd write: RLN3nLSTC register = 0000 0001_B (01_H)
- Verify the transition to LIN self-test mode
  Read the LSTM bit in the RLN3nLSTC register; verify that it is 1 (LIN self-test mode).

If the key of the first write ($A7_H$) is written twice by mistake, the transition to LIN self-test mode is canceled. The above sequence should be retried from the step of first write. In addition, if a write to another LIN-related register is performed during transition to LIN self-test mode (three consecutive write operations to the RLN3nLSTC register), the transition is also canceled.

16.9.2 Transmission in LIN Master Self-Test Mode

To execute a self-test on LIN master transmission, perform the procedure below:

- Set the baud rate, noise filter, and interrupt output related registers.
  RLN3nLWBR register = 0000 $xxxx_B$*1
  RLN3nLBRP0 register = xxxx $xxxx_B$*1
  RLN3nLBRP1 register = xxxx $xxxx_B$*1
  RLN3nLMD register = 00xx $xx00_B$*1
- Set the interrupt enable and error enable related registers.
  RLN3nLIE register = 0000 $xxxx_B$*2
  RLN3nLEDE register = x000 x0xx
- Set the break field and space related registers.
  RLN3nLBFC register = 00xx $xxxx_B$
  RLN3nLSC register = 00xx $0xxx_B$
- Cancel the LIN reset mode.
  Write 11_B to the OM1 and OM0 bits in the RLN3nLCUC register, and check that the OMM1 and OMM0 bits in the RLN3nLMST register are 11_B.
- Set the transmit frame related registers.
  RLN3nLDFC register = 00x1 $xxxx_B$
  RLN3nLIDB register = xxxx $xxxx_B$
  RLN3nLDRB1 to RLN3nLDRB8 registers = xxxx $xxxx_B$
- Header transmission → response transmission started
  Set the FTS bit in the RLN3nLTRC register to 1 (frame transmission or wake-up transmission/ reception started).
  The LIN master self-test mode (transmission) is executed. In this mode, interrupt are generated, and status and error status are also updated. The checksum is automatically calculated by the LIN/ UART interface.
  To suspend the transmission during LIN master self-test mode (transmission), write 0 to the OM0 bit of the RLN3nLCUC register (LIN reset mode) and transition to LIN reset mode.
- When the transmission is completed, the reversed value of the looped-back frame data is stored in the RLN3nLIDB, RLN3nLDBRb (b = 1 to 8), and RLN3nLCBR registers (the data is reversed before being stored because the transmitted value should be compared with the looped-back value). Then, the FTS bit in the RLN3nLTRC register is cleared.
- If the transmission fails to complete due to an error, the applicable error flag is set and the FTS bit in the RLN3nLTRC register is cleared.

Note: x: Don't care

Note 1. The following register settings are not reflected to the operation of the LIN self-test mode. The LPRS bit in the RLN3nLWBR register, the RLN3nLBRP0 register, the RLN3nLBRP1 register and the LCKS bit in the RLN3nLMD register. Therefore, those settings are not necessary.

Note 2. If necessary, set the related registers described in **Section 6, Interrupt**.

Note 3. When the successful header transmission interrupt and the successful frame transmission interrupt are used in the same interrupt processing, if the software processing of the successful header transmission interrupt is not completed before the generation of the successful frame transmission interrupt, the SHIE bit in the RLN3nLIE register should not be set to 1 (successful header transmission interrupt enabled). The time required from the set of

the successful header transmission flag to the set of the successful frame/wake-up transmission flag is calculated by the following formula.

10 × (number of data bytes + 1) [Tbit]

1 Tbit = 1/frequency of LIN system clock (fLIN) × 16

16.9.3 Reception in LIN Master Self-Test Mode

To execute a self-test on LIN master reception, perform the procedure below:

- Set the baud rate, noise filter, and interrupt output related registers.
  RLN3nLWBR register = 0000 $xxxx_B$*1
  RLN3nLBRP0 register = xxxx $xxxx_B$*1
  RLN3nLBRP1 register = xxxx $xxxx_B$*1
  RLN3nLMD register = 00xx $xx00_B$*1
- Set the interrupt enable and error enable related registers.
  RLN3nLIE register = 0000 $xxxx_B$*2
  RLN3nLEDE register = x000 $x0xx_B$
- Set the break field and space related registers.
  RLN3nLBFC register = 00xx $xxxx_B$
  RLN3nLSC register = 00xx $0xxx_B$*1
- Cancel the LIN reset mode.
  Write 11_B to the OM1 and OM0 bits in the RLN3nLCUC register, and check that the OMM1 and OMM0 bits in the RLN3nLMST register are 11_B.
- Set the reception frame related registers.
  RLN3nLDFC register = 00x0 $xxxx_B$
  RLN3nLIDB register = xxxx $xxxx_B$
  RLN3nLDRB1 to RLN3nLDRB8 registers = xxxx $xxxx_B$
  RLN3nCBR register = xxxx $xxxx_B$
  Since the checksum value to be transmitted is not automatically calculated, set the calculation value to the RLN3nLCBR register.
- Header transmission → response reception started
  Set the FTS bit in the RLN3nLTRC register to 1 (frame transmission or wake-up transmission/ reception started).
  The LIN master self-test mode (reception) is executed. In this mode, interrupt are generated, and status and error status are also updated.
  To suspend the transmission during LIN master self-test mode (reception), write 0 to the OM0 bit of the RLN3nLCUC register (LIN reset mode) and transition to LIN reset mode.
- When the reception is completed, the reversed value of the looped-back frame data is stored in the RLN3nLIDB, RLN3nLDBRb (b = 1 to 8), and RLN3nLCBR registers (the data is reversed before being stored because the set value should be compared with the looped-back value). Then, the FTS bit in the RLN3nLTRC register is cleared.
- If the reception fails to complete due to an error, the applicable error flag is set and the FTS bit in the RLN3nLTRC register is cleared.

Note: x: Don't care

Note 1. The following register settings are not reflected to the operation of the LIN self-test mode. The LPRS bit in the RLN3nLWBR register, the RLN3nLBRP0 register, the RLN3nLBRP1

register, the LCKS bit in the RLN3nLMD register, and the IBS bit in the RLN3nLSC register. Therefore, those settings are not necessary.

Note 2. If necessary, set the related registers described in **Section 6, Interrupt**.

Note 3. When the successful header transmission interrupt and the successful frame reception interrupt are used in the same interrupt processing, if the software processing of the successful header transmission interrupt is not completed before the generation of the successful frame reception interrupt, the SHIE bit in the RLN3nLIE register should not be set to 1 (successful header transmission interrupt enabled).
The time required from the set of the successful header transmission flag to the set of the successful frame/wake-up reception flag is calculated by the following formula.

10 × (number of data bytes + 1) [Tbit]

1 Tbit = 1/frequency of LIN system clock (fLIN) × 16

16.9.4 Terminating LIN Self-Test Mode

To terminate LIN self-test mode, perform the procedure below:

- Write 0 (LIN reset mode) to the OM0 bit in the RLN3nLCUC register.
  If the OMM1 and OMM0 bits in the RLN3nLMST register are not 11_B, write 11_B to the OM1 and OM0 bits in the RLN3nLCUC register. After confirming that the OMM1 and OMM0 bits in the RLN3nLMST register have turned 11_B, change to LIN reset mode.
- Verify the cancelation of LIN self-test mode.
  Read the LSTM bit in the RLN3nLSTC register; confirm that it is 0 (not in LIN self-test mode)
- Verify the transition to LIN reset mode.
  Read the OMM0 bit in the RLN3nLMST register; verify that it is 0 (LIN reset mode).

16.10 Baud Rate Generator

The prescaler clock is obtained by frequency-dividing the LIN communication clock source by the prescaler, and the LIN system clock (fLIN) is obtained by frequency-dividing the prescaler clock by the baud rate generator. The clock obtained by frequency-dividing the LIN system clock (fLIN) by the number of samples is the baud rate. The reciprocal of this baud rate is called the bit time (Tbit).

The LIN/UART interface has two kinds of baud rate generators. The baud rate generators switch over according to the mode used.

16.10.1 LIN Master Mode

Figure 16.28 shows a block diagram of baud rate generation in LIN master mode.

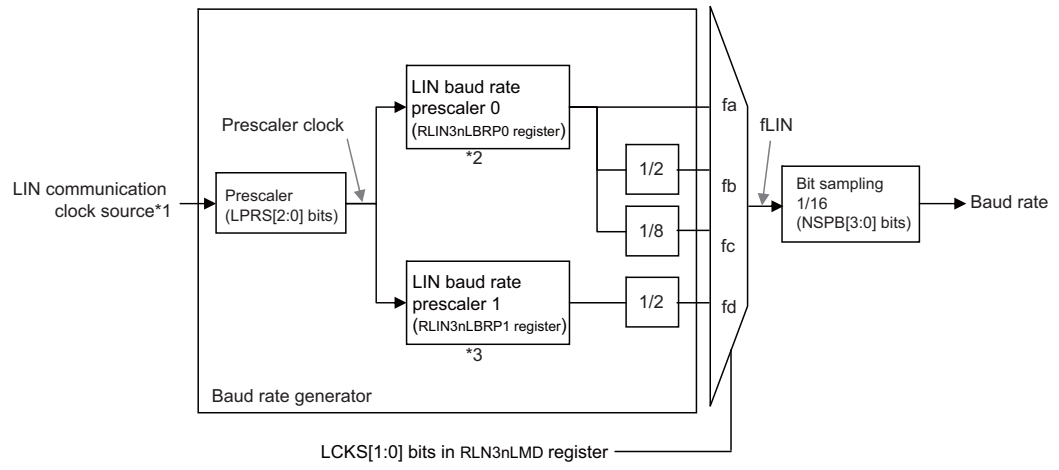

Note 1. For the LIN communication clock source, see **Section 12, Clock Controller**.
Note 2. When the value in RLN3nLBRP0 register is N (N = 0 to 255), the clock frequency is divided by N + 1.
Note 3. When the value in RLN3nLBRP1 register is M (M = 0 to 255), the clock frequency is divided by N + 1.

Figure 16.28 Block Diagram of Baud Rate Generation in LIN Master Mode

By setting the RLN3nLBRP0 register so that fa is 307200 Hz (= 19200 × 16), the resulting bit rates are fa = 19200 × 16, fb = 9600 × 16, and fc = 2400 × 16. These bit rates are frequency-divided by 16 in the bit timing generator, enabling bit rates of 19200 bps, 9600 bps and 2400 bps, to be generated. Also, by setting the RLN3nLBRP1 register so that fd is 166672 Hz (= 10417 × 16), the resulting bit rate is fd = 10417 × 16. This bit rate is frequency-divided by 16 in the bit timing generator, enabling 10417 bps to be generated.

Table 16.70 shows examples of baud rate generation for each frequency of the LIN communications clock source (19200, 10417, 9600, and 2400 bps) in LIN master mode and the sizes of errors in the rates.

Table 16.70 Example of Baud Rate Generation in LIN master mode (19200 bps, 10417 bps, 9600 bps, and 2400 bps)

LIN Communication Clock Source	Prescaler	Baud Rate Generator 0 (N + 1) Dividing	Baud Rate Generator 0 (N + 1) Dividing	System Clock	Baud Rate	Error
80 MHz	1/2	130	—	fa	19230.77	+0.16%
	1/1	—	240	fd	10416.67	–0.003%
	1/2	130	—	fb	9615.38	+0.16%
	1/2	130	—	fc	2403.85	+0.16%

NOTE

The number of samples per bit is 16 (when RLN3nLWBR.NSPB[3:0] = 0000_B or 1111_B).

Baud rate is calculated by the following formula:

Baud rate of LIN slave

= {Frequency of LIN communication clock source} × (RLN3nLWBR.LPRS[2:0] selection clock) ÷ (RLN3nLBRP0+ 1) ÷ 16 [bps] (When fa is selected for fLIN)

= {Frequency of LIN communication clock source} × (RLN3nLWBR.LPRS[2:0] selection clock) ÷ (RLN3nLBRP0 + 1) ÷ 2 or 16 [bps] (When fb is selected for fLIN)

= {Frequency of LIN communication clock source} × (RLN3nLWBR.LPRS[2:0] selection clock) ÷ (RLN3nLBRP0 + 1) ÷ 8 ÷ 16 [bps] (When fc is selected for fLLIN)

= {Frequency of LIN communication clock source} × (RLN3nLWBR.LPRS[2:0] selection clock) ÷ (RLN3nLBRP1 + 1) ÷ 2 ÷ 16 [bps] (When fd is selected for fLIN)

16.10.2 UART Mode

Figure 16.29 shows a block diagram of baud rate generation in UART mode.

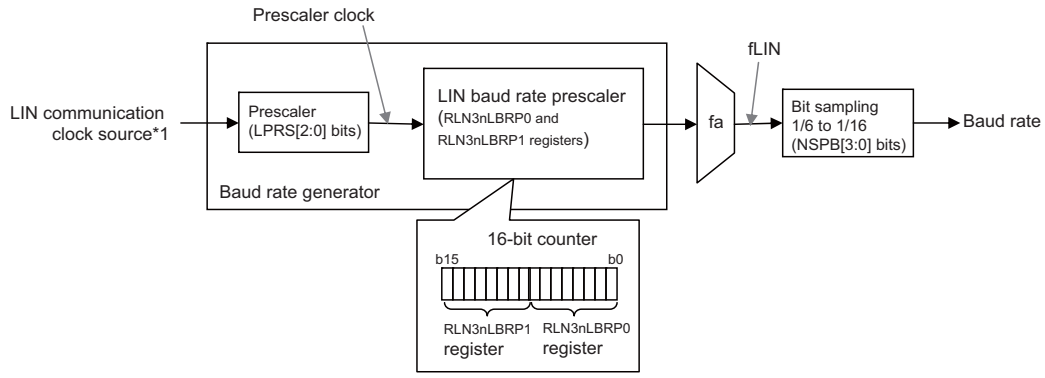

Note 1. For the LIN communication clock source, see **Section 12, Clock Controller**.

Figure 16.29 Block Diagram of Baud Rate Generation in UART Mode

UART baud rate is calculated with the following formula:

UART baud rate
= {LIN communication clock source frequency} × (RLN3nLWBR.LPRS[2:0] select clock) ÷ (RLN3nLBRP01 + 1) ÷ {RLN3nLWBR.NSPB[3:0] select count} [bps]

Table 16.71 shows examples of baud rate generation for each frequency of the LIN communications clock source (19200, 9600, 2400, and 10417 bps) and the sizes of the errors in the rates.

Table 16.71 Examples of UART Baud Rate Setting (When LIN Communication Clock Source is 80 MHz)

UART Baud Rate (Target)	Prescaler	Baud Rate Generator 01 (L + 1) Dividing	Baud Rate	Error
1200 bps	1/2	2084	1199.616	–0.03%
2400 bps	1/2	1042	2399.232	–0.03%
4800 bps	1/2	520	4807.692	+0.16%
9600 bps	1/2	260	9615.385	+0.16%
19200 bps	1/2	130	19230.77	+0.16%
31250 bps	1/2	80	31250.00	0.00%
38400 bps	1/2	66	37878.79	–1.36%

NOTE

The number of samples per bit in **Table 16.71** is 16 (when RLN3nLWBR.NSPB[3:0] = 0000_B or 1111_B).

16.11 Noise Filter

The LIN/UART interface has a noise filter for reducing erroneous receiving of data due to noise. By setting the LRDNFS bit in the RLN3nLMD register to 0 (to use the noise filter), the noise filter is activated. The noise filter samples the level of the synchronized RLIN3nRX with the prescaler clock, and outputs the sampling value determined by a 3-sampling majority rule. The value of each bit of the receive data is determined based on the noise filter output.

Figure 16.30 shows the configuration of the noise filter, **Figure 16.31** shows an example of a noise filter circuit, and **Figure 16.32** shows the determination of the received data when the noise filter is used.

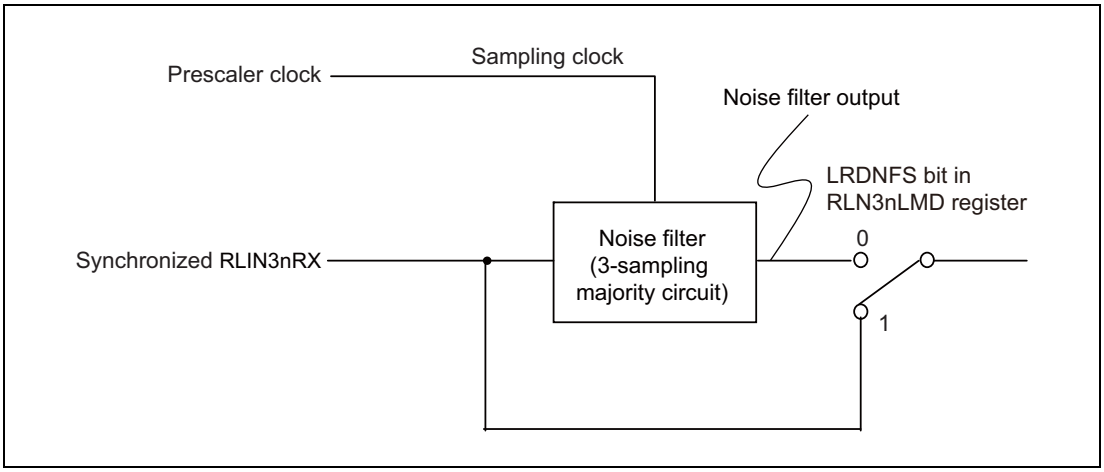

Figure 16.30 Configuration of Noise Filter

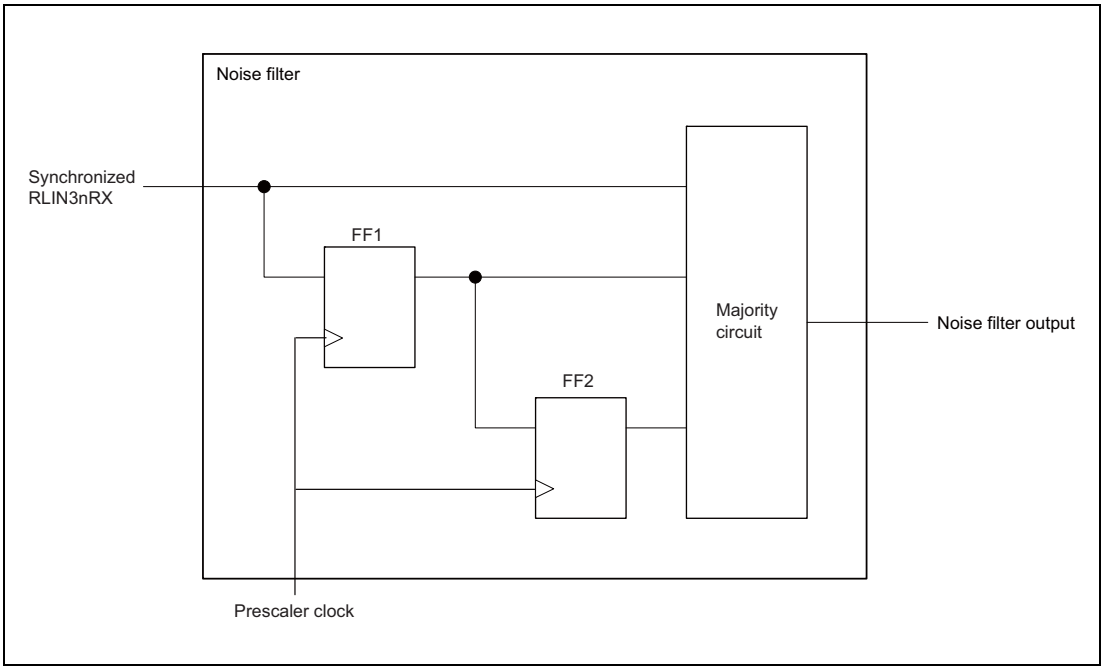

Figure 16.31 Example of Noise Filter Circuit

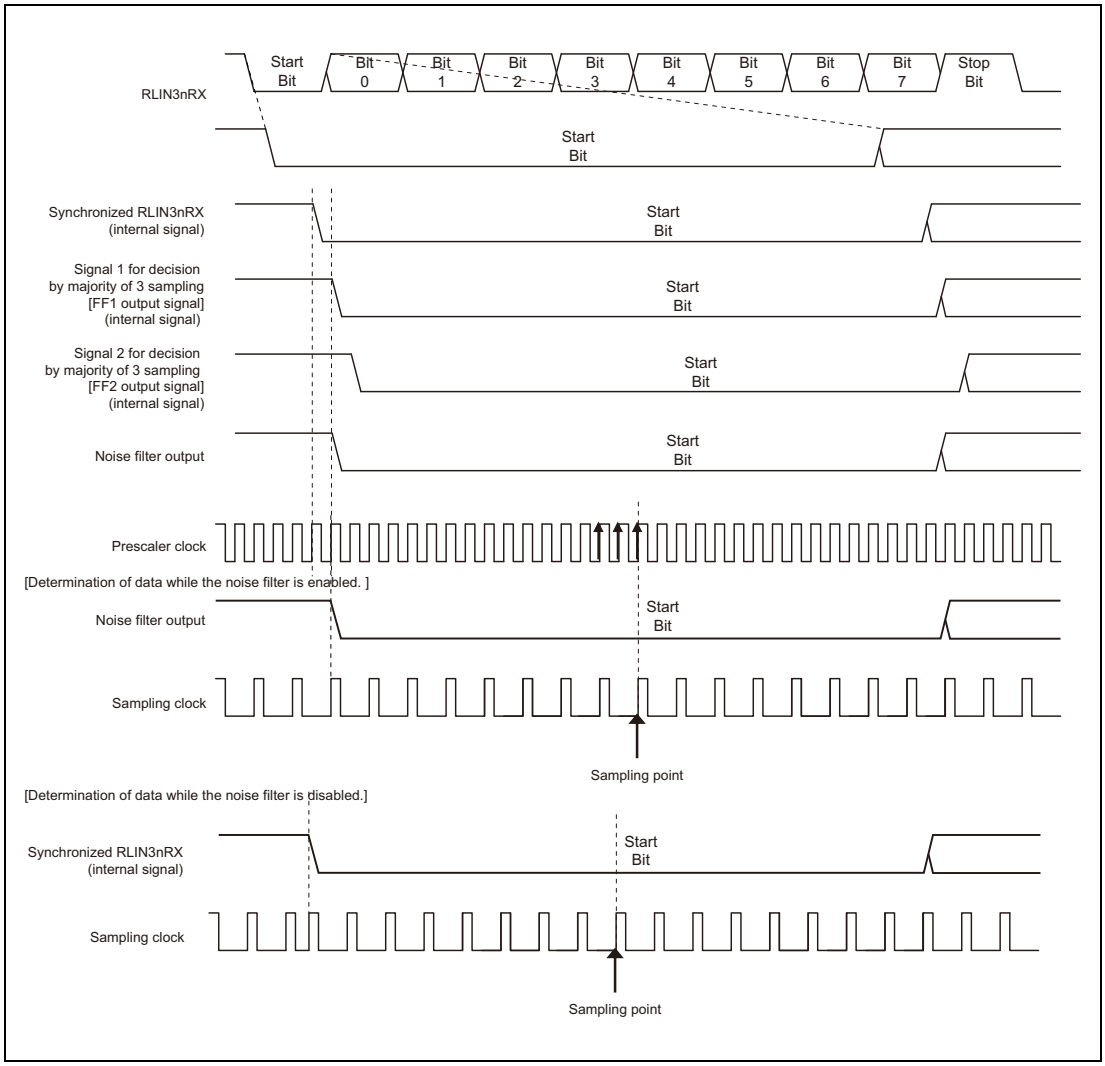

Figure 16.32 Determination of Received Data when Noise Filter is Used

Section 17 CAN Interface (RS-CAN)

This section contains a generic description of the CAN Interface (RS-CAN).

The first part of this section describes all RH850/P1x specific properties, such as the number of units, register base addresses, etc. The remainder of the section describes the functions and registers of RS-CAN.

17.1 Features of RH850/P1x RS-CAN

17.1.1 Number of Units and Channels

This microcontroller has the following number of RS-CAN units.

Table 17.1 Number of Units

Product Name	RH850/P1x 100 pins	RH850/P1x 144 pins
Number of Units	1	
Name	RSCANn (n = 0)	

The individual products have the CAN Interface Channel listed below.

Table 17.2 Unit Configurations and Channels

Unit Name	Channel Name	RH850/P1x 100 pins			RH850/P1x 144 pins	
		512 KB (2 ch)	1 MB (2 ch)	2 MB (3 ch)	1 MB (2 ch)	2 MB (3 ch)
RSCAN0	CAN0	√	√	√	√	√
	CAN1	√	√	√	√	√
	CAN2	—	—	√	—	√

Table 17.3 Index

Index	Meaning
n	Throughout this section, the individual RS-CAN units are generically indicated by the index “n” (n = 0); for example, RSCANnGCTR is the global control register of the RSCANn unit.
m	Throughout this section, the individual channels of RS-CAN units are generically indicated by the index “m” (m = 0 to 2); for example, RSCAN0CmSTS is the channel m status register.
j	The individual registers associated with receive rule table are generically indicated by the index “j” (j = 0 to 15); for example, RSCAN0GAFLIDj is the receive rule ID register.
k	The individual transmit/receive FIFO buffers are generically indicated by the index “k” (k = 0 to [channel m × 3 + 2]); for example, RSCAN0CFCCk is the transmit/receive FIFO buffer configuration/control register.
x	The individual receive FIFO buffers in the RS-CAN units are identified by the index “x” (x = 0 to 7): for example, RSCAN0RFSTSx is the receive FIFO buffer status register in the RSCAN0 unit.
q	The individual receive buffers are generically indicated by the index “q” (q = 0 to [channel m × 16 + 15]); for example, RSCAN0RMIDq is the receive buffer ID register.
p	The individual transmit buffers are generically indicated by the index “p” (p = 0 to [channel m × 16 + 15]; for example, RSCAN0TMCp is the transmit buffer control register.
r	The individual RAM tests for CAN are generically indicated by the index “r” (r = 0 to 63); for example, RSCAN0RPGACCr is the RAM test page access register.
y	The registers not covered above are indicated by the letter “y” (y = 0, 1); for example, RSCAN0RMNDy is a receive buffer new data register.

Note: The functions and descriptions of registers in this section are for the RS-CANs that has 3 channels (m = 0 to 2). When referring to information with indices, regard the index values as the ones corresponding to your target product. Also, note that, if the value of an index exceeds the range described in this section due to your target product, write the value after reset when writing to bits outside the index range.

The following table lists the values of indices for individual products.

Table 17.4 Indices for Individual Products

Indices for Individual Products						
	RH850/P1x 100 pins			RH850/P1x 144 pis		
	512 KB (2 ch)	1 MB (2 ch)	2 MB (3 ch)	512 KB (2 ch)	1 MB (2 ch)	2 MB (3 ch)
j	0 to 15		0 to 15	0 to 15		0 to 15
k	0 to 5		0 to 8	0 to 5		0 to 8
x	0 to 7		0 to 7	0 to 7		0 to 7
q	0 to 31		0 to 47	0 to 31		0 to 47
p	0 to 31		0 to 47	0 to 31		0 to 47
r	0 to 63		0 to 63	0 to 63		0 to 63
y	0		0, 1	0		0, 1

17.1.2 Register Base Address

RSCAN0 base addresses are listed in the following table.

RSCAN0 register addresses are given as offsets from the base addresses in general.

Table 17.5 Register Base Address

Base Address Name	Base Address
<RSCAN0_base>	$FFD2\ 0000_H$

17.1.3 Clock Supply

The RSCAN0 clock supply is shown in the following table.

Table 17.6 Clock Supply

Unit Name	Clock for the Unit	Supply Clock Name
RSCAN0	clkc	Low-speed peripheral clock CLK_LSB
	pclk	High-speed peripheral clock CLK_HSB
	clk_xincan	Main clock

17.1.4 Interrupt Request

RSCAN0 interrupt requests are listed in the following table.

Table 17.7 Interrupt Requests

Unit Interrupt Signal	Outline	Interrupt Number	DMA/DTS Trigger Number
RSCAN0			
INTRCANGERR	CAN global error interrupt	189	—
INTRCANGRECC	CAN receive FIFO interrupt	190	—
CAN0			
INTRCANmERR (m = 0)	CAN0 error interrupt	183	—
INTRCANmREC (m = 0)	CAN0 transmit/receive FIFO receive completion interrupt	184	—
INTRCANmTRX (m = 0)	CAN0 transmit interrupt	185	—
CAN1			
INTRCANmERR (m = 1)	CAN1 error interrupt	186	—
INTRCANmREC (m = 1)	CAN1 transmit/receive FIFO receive completion interrupt	187	—
INTRCANmTRX (m = 1)	CAN1 transmit interrupt	188	—
CAN2*1			
INTRCANmERR (m = 2)	CAN2 error interrupt	191	—
INTRCANmREC (m = 2)	CAN2 transmit/receive FIFO receive completion interrupt	192	—
INTRCANmTRX (m = 2)	CAN2 transmit interrupt	193	—

Note 1. Only supported for 2-MB devices.

17.1.5 Reset Sources

RSCAN0 reset sources are listed in the following table. RSCAN0 is initialized by these reset sources.

Table 17.8 Reset Sources

Unit Name	Reset Source
RSCAN0	Reset controller SYSRES

17.1.6 External Input/Output Signals

External input/output signals of RSCAN0 are listed below.

Table 17.9 External Input/Output Signals

Unit Signal Name	Outline	Alternative Port Pin Signal
CAN0		
CANmRX (m = 0)	CAN0 receive data input	RSCAN0RX
CANmTX (m = 0)	CAN0 transmit data output	RSCAN0TX
CAN1		
CANmRX (m = 1)	CAN1 receive data input	RSCAN1RX
CANmTX (m = 1)	CAN1 transmit data output	RSCAN1TX

Table 17.9 External Input/Output Signals

Unit Signal Name	Outline	Alternative Port Pin Signal
CAN2*1		
CANmRX (m = 2)	CAN2 receive data input	RSCAN2RX
CANmTX (m = 2)	CAN2 transmit data output	RSCAN2TX

Note 1. Only supported for 2-MB devices.

17.1.7 Combination of Pin Name and Port Name

Table 17.10 shows combinations of RSCAN0 pin name and port name.

Table 17.10 Combination of Pin Name and Port Name

Function	Number of Channels	Pin Name	Port Name			
			Group 1	Group 2	Group 3	Group 4
RSCAN0	CAN0	RSCAN0RX0	P2_0	P3_7	P4_5	—
		RSCAN0TX0	P2_1	P3_8	P4_6	—
	CAN1	RSCAN0RX1	P2_2	P3_12	P4_2	P4_7*1
		RSCAN0TX1	P2_3	P3_13	P4_3	P4_3
	CAN2	RSCAN0RX2*2	P5_6	—	—	—
		RSCAN0TX2*2	P5_7	—	—	—

Note 1. Available in 144-pin products

Note 2. Only supported for 2-MB devices.

17.2 Overview

17.2.1 Functional Overview

The RH850/P1x incorporates one unit of the CAN interface (RS-CAN) which consists of 3 channels (CAN0, CAN1, CAN2) of the CAN controller conforming to the ISO11898-1 specifications. Only 2 channels (CAN0, CAN1) are supported for 512-KB and 1-MB devices. **Table 17.11** shows the RSCAN module specifications. **Figure 17.1** shows the RS-CAN module block diagram.

Table 17.11 RS-CAN Module Specifications (1/2)

Item	Specification
Number of channels	2 (3)*1
Protocol	ISO11898-1 compliant
Communication speed	• Maximum 1 Mbps $\text{Communication speed (CANm bit time clock)} = \frac{1}{\text{CANm bit time}}$ CANm bit time = CANmTq × Tq count per bit $\text{CANmTq} = \frac{\text{(BRP[9:0] bits in the RSCAN0CmCFG register + 1)}}{\text{fCAN}}$ m = 0 to 1(2)*1 Tq: Time quantum fCAN: Frequency of CAN clock (selected by the DCS bit in the RSCAN0GCFG register)
Buffer	160 (240)*1 buffers in total • Individual buffers: 32 (48)*1 buffers (16 buffers × 2 channels) Transmit buffer: 16 buffers per channel Transmit queue: Single queue per channel (shared with the transmit buffer; up to 16 buffers allocatable) • Shared buffers: 128 (192)*1 buffers for all channels Receive buffer: 0 to 16 × number of channel Receive FIFO buffer: 8 FIFO buffers (up to 128 buffers allocatable to each) Transmit/receive FIFO buffer: 3 FIFO buffers per channel (up to 128 buffers allocatable to each) • ECC included
Reception function	• Receives data frames and remote frames. • Selects ID format (standard ID, extended ID, or both IDs) to be received. • Sets interrupt enable/disable for each FIFO. • Mirror function (reception of messages transmitted from the own CAN node) • Timestamp function (to record message reception time as a 16-bit timer value)
Reception filter function	• Selects receive messages according to 128 (192)*1 receive rules. • Sets the number of receive rules (0 to 128) for each channel. • Acceptance filter processing: Sets ID and mask for each receive rule. • DLC filter processing: Enables DLC filter check for each acceptance rule.
Receive message transfer function	• Routing function Transfers receive messages to arbitrary destinations (can be transferred to up to 8 buffers) Transfer destination: Receive buffer, receive FIFO buffer, and/or transmit/receive FIFO buffer • Label addition function Stores label information together with a message in a receive buffer and FIFO buffer.
Transmission function	• Transmits data frames and remote frames. • Selects ID format (standard ID, extended ID, or both IDs) to be transmitted. • Sets interrupt enable/disable for each transmit buffer and transmit/receive FIFO buffer. • Selects ID priority transmission or transmit buffer number priority transmission. • Transmit request can be aborted (possible to confirm with a flag) • One-shot transmission function

Table 17.11 RS-CAN Module Specifications (2/2)

Item	Specification
Interval transmission function	Transmit messages at configurable intervals (transmit mode or gateway mode of transmit/receive FIFO buffers)
Transmit queue function	Transmits all stored messages according to the ID priority.
Transmit history function	Stores the history information of transmission-completed messages
Gateway function	Transmits a received message automatically.
Bus off recovery mode selection	Selects the method for returning from bus off state. • ISO11898-1 compliant • Automatic entry to channel halt mode at bus-off entry • Automatic entry to channel halt mode at bus-off end • Transition to channel standby mode by program request • Transition to the error-active state by program request (forcible return from the bus off state)
Error status monitoring	• Monitors CAN protocol errors (stuff error, form error, ACK error, CRC error, bit error, ACK delimiter error, and bus dominant lock). • Detects error status transitions (error warning, error passive, bus off entry, and bus off recovery) • Reads the error counter. • Monitors DLC errors.
Interrupt source	8 (11)*1 sources • Global Interrupts (2 sources) Receive FIFO interrupt Global error interrupt • Channel interrupts (3 sources/channel) CANm transmit interrupt (m = 0 to 2) – CANm transmit complete interrupt – CANm transmit abort interrupt – CANm transmit/receive FIFO transmit complete interrupt (in transmit mode, gateway mode) – CANm transmit history interrupt – CANm transmit queue interrupt CANm transmit/receive FIFO receive complete interrupt (in receive mode, gateway mode) CANm error interrupt
CAN stop mode	Reduces power consumption by stopping clock supply to the RS-CAN module.
CAN clock source	clkc or clk_xincan selectable.
Test function	Test function for user evaluation • Listen-only mode • Self-test mode 0 (external loopback) • Self-test mode 1 (internal loopback) • RAM test (read/write test) • Inter-channel communication test

Note 1. ( ) indicates cases with 2-MB devices.

17.2.2 Block Diagram

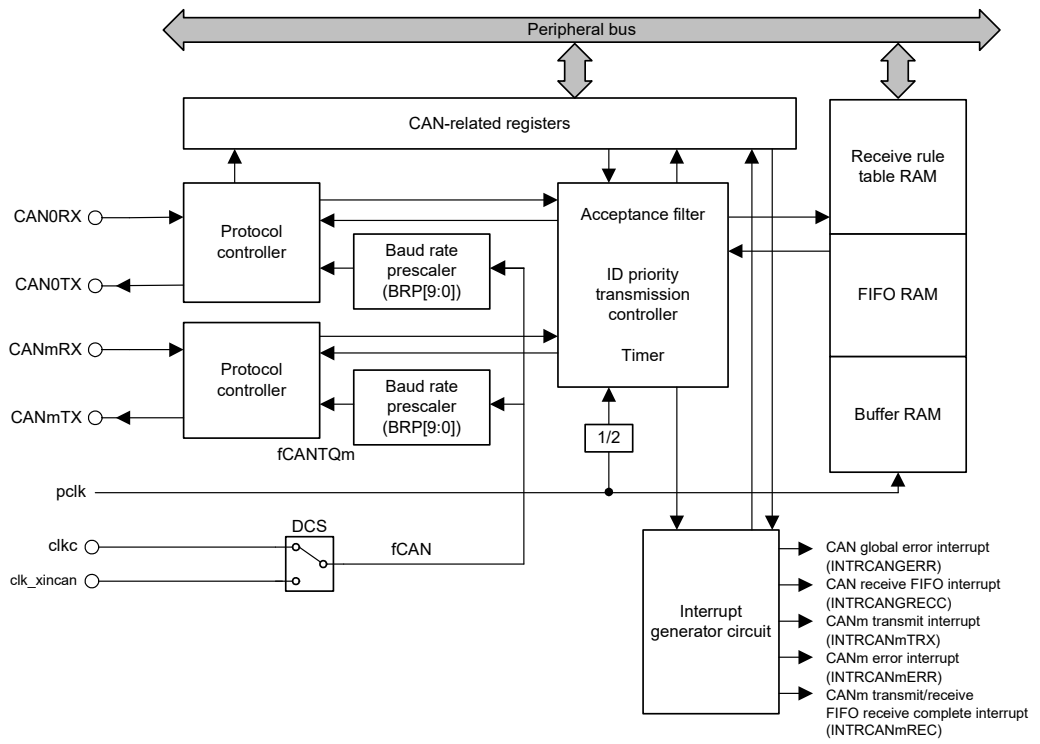

Note: m = 0 to 2
BRP[9:0]: Bits in the RSCAN0CmCFG register
DCS: Bits in the RSCAN0GCFG register
fCANTQm: CANmTq clock
fCAN: CAN clock

Figure 17.1 RS-CAN Module Block Diagram

17.3 Registers

17.3.1 List of Registers

RS-CAN registers are listed in the following table.

For details about <RSCAN0_base>, see **Section 17.1.2, Register Base Address**.

Table 17.12 Registers (1/17)

Register	Symbol	Value after Reset	Address	Access Size
Channel configuration register	RSCAN0C0CFG	$0000\ 0000_H$	<RSCAN0_base> + 0000_H	8, 16, 32
Channel control register	RSCAN0C0CTR	$0000\ 0005_H$	<RSCAN0_base> + 0004_H	8, 16, 32
Channel status register	RSCAN0C0STS	$0000\ 0005_H$	<RSCAN0_base> + 0008_H	8, 16, 32
Channel error flag register	RSCAN0C0ERFL	$0000\ 0000_H$	<RSCAN0_base> + $000C_H$	8, 16, 32
Channel configuration register	RSCAN0C1CFG	$0000\ 0000_H$	<RSCAN0_base> + 0010_H	8, 16, 32
Channel control register	RSCAN0C1CTR	$0000\ 0005_H$	<RSCAN0_base> + 0014_H	8, 16, 32
Channel status register	RSCAN0C1STS	$0000\ 0005_H$	<RSCAN0_base> + 0018_H	8, 16, 32
Channel error flag register	RSCAN0C1ERFL	$0000\ 0000_H$	<RSCAN0_base> + $001C_H$	8, 16, 32
Channel configuration register*1	RSCAN0C2CFG	$0000\ 0000_H$	<RSCAN0_base> + 0020_H	8, 16, 32
Channel control register*1	RSCAN0C2CTR	$0000\ 0005_H$	<RSCAN0_base> + 0024_H	8, 16, 32
Channel status register*1	RSCAN0C2STS	$0000\ 0005_H$	<RSCAN0_base> + 0028_H	8, 16, 32
Channel error flag register*1	RSCAN0C2ERFL	$0000\ 0000_H$	<RSCAN0_base> + $002C_H$	8, 16, 32
Global configuration register	RSCAN0GCFG	$0000\ 0000_H$	<RSCAN0_base> + 0084_H	8, 16, 32
Global control register	RSCAN0GCTR	$0000\ 0005_H$	<RSCAN0_base> + 0088_H	8, 16, 32
Global status register	RSCAN0GSTS	$0000\ 000D_H$	<RSCAN0_base> + $008C_H$	8, 16, 32
Global error flag register	RSCAN0GERFL	$0000\ 0000_H$	<RSCAN0_base> + 0090_H	8, 16, 32
Global timestamp counter register	RSCAN0GTSC	$0000\ 0000_H$	<RSCAN0_base> + 0094_H	16, 32
Receive rule entry control register	RSCAN0GAFLECTR	$0000\ 0000_H$	<RSCAN0_base> + 0098_H	8, 16, 32
Receive rule configuration register 0	RSCAN0GAFLCFG0	$0000\ 0000_H$	<RSCAN0_base> + $009C_H$	8, 16, 32
Receive buffer number register	RSCAN0RMNB	$0000\ 0000_H$	<RSCAN0_base> + $00A4_H$	8, 16, 32
Receive buffer new data register 0	RSCAN0RMND0	$0000\ 0000_H$	<RSCAN0_base> + $00A8_H$	8, 16, 32
Receive buffer new data register 1*1	RSCAN0RMND1	$0000\ 0000_H$	<RSCAN0_base> + $00AC_H$	8, 16, 32
Receive FIFO buffer configuration and control register 0	RSCAN0RFCC0	$0000\ 0000_H$	<RSCAN0_base> + $00B8_H$	8, 16, 32
Receive FIFO buffer configuration and control register 1	RSCAN0RFCC1	$0000\ 0000_H$	<RSCAN0_base> + $00BC_H$	8, 16, 32
Receive FIFO buffer configuration and control register 2	RSCAN0RFCC2	$0000\ 0000_H$	<RSCAN0_base> + $00C0_H$	8, 16, 32
Receive FIFO buffer configuration and control register 3	RSCAN0RFCC3	$0000\ 0000_H$	<RSCAN0_base> + $00C4_H$	8, 16, 32
Receive FIFO buffer configuration and control register 4	RSCAN0RFCC4	$0000\ 0000_H$	<RSCAN0_base> + $00C8_H$	8, 16, 32
Receive FIFO buffer configuration and control register 5	RSCAN0RFCC5	$0000\ 0000_H$	<RSCAN0_base> + $00CC_H$	8, 16, 32
Receive FIFO buffer configuration and control register 6	RSCAN0RFCC6	$0000\ 0000_H$	<RSCAN0_base> + $00D0_H$	8, 16, 32
Receive FIFO buffer configuration and control register 7	RSCAN0RFCC7	$0000\ 0000_H$	<RSCAN0_base> + $00D4_H$	8, 16, 32
Receive FIFO buffer status register 0	RSCAN0RFSTS0	$0000\ 0001_H$	<RSCAN0_base> + $00D8_H$	8, 16, 32
Receive FIFO buffer status register 1	RSCAN0RFSTS1	$0000\ 0001_H$	<RSCAN0_base> + $00DC_H$	8, 16, 32
Receive FIFO buffer status register 2	RSCAN0RFSTS2	$0000\ 0001_H$	<RSCAN0_base> + $00E0_H$	8, 16, 32
Receive FIFO buffer status register 3	RSCAN0RFSTS3	$0000\ 0001_H$	<RSCAN0_base> + $00E4_H$	8, 16, 32
Receive FIFO buffer status register 4	RSCAN0RFSTS4	$0000\ 0001_H$	<RSCAN0_base> + $00E8_H$	8, 16, 32
Receive FIFO buffer status register 5	RSCAN0RFSTS5	$0000\ 0001_H$	<RSCAN0_base> + $00EC_H$	8, 16, 32
Receive FIFO buffer status register 6	RSCAN0RFSTS6	$0000\ 0001_H$	<RSCAN0_base> + $00F0_H$	8, 16, 32
Receive FIFO buffer status register 7	RSCAN0RFSTS7	$0000\ 0001_H$	<RSCAN0_base> + $00F4_H$	8, 16, 32
Receive FIFO buffer pointer control register 0	RSCAN0RFPCTR0	$0000\ 0000_H$	<RSCAN0_base> + $00F8_H$	8, 16, 32
Receive FIFO buffer pointer control register 1	RSCAN0RFPCTR1	$0000\ 0000_H$	<RSCAN0_base> + $00FC_H$	8, 16, 32
Receive FIFO buffer pointer control register 2	RSCAN0RFPCTR2	$0000\ 0000_H$	<RSCAN0_base> + 0100_H	8, 16, 32

Table 17.12 Registers (2/17)

Register	Symbol	Value after Reset	Address	Access Size
Receive FIFO buffer pointer control register 3	RSCAN0RFPCTR3	$0000\ 0000_H$	<RSCAN0_base> + 0104_H	8, 16, 32
Receive FIFO buffer pointer control register 4	RSCAN0RFPCTR4	$0000\ 0000_H$	<RSCAN0_base> + 0108_H	8, 16, 32
Receive FIFO buffer pointer control register 5	RSCAN0RFPCTR5	$0000\ 0000_H$	<RSCAN0_base> + $010C_H$	8, 16, 32
Receive FIFO buffer pointer control register 6	RSCAN0RFPCTR6	$0000\ 0000_H$	<RSCAN0_base> + 0110_H	8, 16, 32
Receive FIFO buffer pointer control register 7	RSCAN0RFPCTR7	$0000\ 0000_H$	<RSCAN0_base> + 0114_H	8, 16, 32
Transmit/receive FIFO buffer configuration and control register 0	RSCAN0CFCC0	$0000\ 0000_H$	<RSCAN0_base> + 0118_H	8, 16, 32
Transmit/receive FIFO buffer configuration and control register 1	RSCAN0CFCC1	$0000\ 0000_H$	<RSCAN0_base> + $011C_H$	8, 16, 32
Transmit/receive FIFO buffer configuration and control register 2	RSCAN0CFCC2	$0000\ 0000_H$	<RSCAN0_base> + 0120_H	8, 16, 32
Transmit/receive FIFO buffer configuration and control register 3	RSCAN0CFCC3	$0000\ 0000_H$	<RSCAN0_base> + 0124_H	8, 16, 32
Transmit/receive FIFO buffer configuration and control register 4	RSCAN0CFCC4	$0000\ 0000_H$	<RSCAN0_base> + 0128_H	8, 16, 32
Transmit/receive FIFO buffer configuration and control register 5	RSCAN0CFCC5	$0000\ 0000_H$	<RSCAN0_base> + $012C_H$	8, 16, 32
Transmit/receive FIFO buffer configuration and control register 6*1	RSCAN0CFCC6	$0000\ 0000_H$	<RSCAN0_base> + 0130_H	8, 16, 32
Transmit/receive FIFO buffer configuration and control register 7*1	RSCAN0CFCC7	$0000\ 0000_H$	<RSCAN0_base> + 0134_H	8, 16, 32
Transmit/receive FIFO buffer configuration and control register 8*1	RSCAN0CFCC8	$0000\ 0000_H$	<RSCAN0_base> + 0138_H	8, 16, 32
Transmit/receive FIFO buffer status register 0	RSCAN0CFSTS0	$0000\ 0001_H$	<RSCAN0_base> + 0178_H	8, 16, 32
Transmit/receive FIFO buffer status register 1	RSCAN0CFSTS1	$0000\ 0001_H$	<RSCAN0_base> + $017C_H$	8, 16, 32
Transmit/receive FIFO buffer status register 2	RSCAN0CFSTS2	$0000\ 0001_H$	<RSCAN0_base> + 0180_H	8, 16, 32
Transmit/receive FIFO buffer status register 3	RSCAN0CFSTS3	$0000\ 0001_H$	<RSCAN0_base> + 0184_H	8, 16, 32
Transmit/receive FIFO buffer status register 4	RSCAN0CFSTS4	$0000\ 0001_H$	<RSCAN0_base> + 0188_H	8, 16, 32
Transmit/receive FIFO buffer status register 5	RSCAN0CFSTS5	$0000\ 0001_H$	<RSCAN0_base> + $018C_H$	8, 16, 32
Transmit/receive FIFO buffer status register 6*1	RSCAN0CFSTS6	$0000\ 0001_H$	<RSCAN0_base> + 0190_H	8, 16, 32
Transmit/receive FIFO buffer status register 7*1	RSCAN0CFSTS7	$0000\ 0001_H$	<RSCAN0_base> + 0194_H	8, 16, 32
Transmit/receive FIFO buffer status register 8*1	RSCAN0CFSTS8	$0000\ 0001_H$	<RSCAN0_base> + 0198_H	8, 16, 32
Transmit/receive FIFO buffer pointer control register 0	RSCAN0CFPCTR0	$0000\ 0000_H$	<RSCAN0_base> + $01D8_H$	8, 16, 32
Transmit/receive FIFO buffer pointer control register 1	RSCAN0CFPCTR1	$0000\ 0000_H$	<RSCAN0_base> + $01DC_H$	8, 16, 32
Transmit/receive FIFO buffer pointer control register 2	RSCAN0CFPCTR2	$0000\ 0000_H$	<RSCAN0_base> + $01E0_H$	8, 16, 32
Transmit/receive FIFO buffer pointer control register 3	RSCAN0CFPCTR3	$0000\ 0000_H$	<RSCAN0_base> + $01E4_H$	8, 16, 32
Transmit/receive FIFO buffer pointer control register 4	RSCAN0CFPCTR4	$0000\ 0000_H$	<RSCAN0_base> + $01E8_H$	8, 16, 32
Transmit/receive FIFO buffer pointer control register 5	RSCAN0CFPCTR5	$0000\ 0000_H$	<RSCAN0_base> + $01EC_H$	8, 16, 32
Transmit/receive FIFO buffer pointer control register 6*1	RSCAN0CFPCTR6	$0000\ 0000_H$	<RSCAN0_base> + $01F0_H$	8, 16, 32
Transmit/receive FIFO buffer pointer control register 7*1	RSCAN0CFPCTR7	$0000\ 0000_H$	<RSCAN0_base> + $01F4_H$	8, 16, 32
Transmit/receive FIFO buffer pointer control register 8*1	RSCAN0CFPCTR8	$0000\ 0000_H$	<RSCAN0_base> + $01F8_H$	8, 16, 32
FIFO empty status register	RSCAN0FESTS	$0001\ FFFF_H$	<RSCAN0_base> + 0238_H	8, 16, 32
FIFO full status register	RSCAN0FFSTS	$0000\ 0000_H$	<RSCAN0_base> + $023C_H$	8, 16, 32
FIFO message lost status register	RSCAN0FMSTS	$0000\ 0000_H$	<RSCAN0_base> + 0240_H	8, 16, 32
Receive FIFO buffer interrupt flag status register	RSCAN0RFISTS	$0000\ 0000_H$	<RSCAN0_base> + 0244_H	8, 16, 32
Transmit/receive FIFO buffer RX interrupt flag status register	RSCAN0CFRISTS	$0000\ 0000_H$	<RSCAN0_base> + 0248_H	8, 16, 32
Transmit/receive FIFO buffer TX interrupt flag status register	RSCAN0CFTISTS	$0000\ 0000_H$	<RSCAN0_base> + $024C_H$	8, 16, 32
Transmit buffer control register 0	RSCAN0TMC0	00_H	<RSCAN0_base> + 0250_H	8
Transmit buffer control register 1	RSCAN0TMC1	00_H	<RSCAN0_base> + 0251_H	8
Transmit buffer control register 2	RSCAN0TMC2	00_H	<RSCAN0_base> + 0252_H	8
Transmit buffer control register 3	RSCAN0TMC3	00_H	<RSCAN0_base> + 0253_H	8
Transmit buffer control register 4	RSCAN0TMC4	00_H	<RSCAN0_base> + 0254_H	8
Transmit buffer control register 5	RSCAN0TMC5	00_H	<RSCAN0_base> + 0255_H	8
Transmit buffer control register 6	RSCAN0TMC6	00_H	<RSCAN0_base> + 0256_H	8
Transmit buffer control register 7	RSCAN0TMC7	00_H	<RSCAN0_base> + 0257_H	8
Transmit buffer control register 8	RSCAN0TMC8	00_H	<RSCAN0_base> + 0258_H	8

Table 17.12 Registers (3/17)

Register	Symbol	Value after Reset	Address	Access Size
Transmit buffer control register 9	RSCAN0TMC9	00_H	<RSCAN0_base> + 0259_H	8
Transmit buffer control register 10	RSCAN0TMC10	00_H	<RSCAN0_base> + $025A_H$	8
Transmit buffer control register 11	RSCAN0TMC11	00_H	<RSCAN0_base> + $025B_H$	8
Transmit buffer control register 12	RSCAN0TMC12	00_H	<RSCAN0_base> + $025C_H$	8
Transmit buffer control register 13	RSCAN0TMC13	00_H	<RSCAN0_base> + $025D_H$	8
Transmit buffer control register 14	RSCAN0TMC14	00_H	<RSCAN0_base> + $025E_H$	8
Transmit buffer control register 15	RSCAN0TMC15	00_H	<RSCAN0_base> + $025F_H$	8
Transmit buffer control register 16	RSCAN0TMC16	00_H	<RSCAN0_base> + 0260_H	8
Transmit buffer control register 17	RSCAN0TMC17	00_H	<RSCAN0_base> + 0261_H	8
Transmit buffer control register 18	RSCAN0TMC18	00_H	<RSCAN0_base> + 0262_H	8
Transmit buffer control register 19	RSCAN0TMC19	00_H	<RSCAN0_base> + 0263_H	8
Transmit buffer control register 20	RSCAN0TMC20	00_H	<RSCAN0_base> + 0264_H	8
Transmit buffer control register 21	RSCAN0TMC21	00_H	<RSCAN0_base> + 0265_H	8
Transmit buffer control register 22	RSCAN0TMC22	00_H	<RSCAN0_base> + 0266_H	8
Transmit buffer control register 23	RSCAN0TMC23	00_H	<RSCAN0_base> + 0267_H	8
Transmit buffer control register 24	RSCAN0TMC24	00_H	<RSCAN0_base> + 0268_H	8
Transmit buffer control register 25	RSCAN0TMC25	00_H	<RSCAN0_base> + 0269_H	8
Transmit buffer control register 26	RSCAN0TMC26	00_H	<RSCAN0_base> + $026A_H$	8
Transmit buffer control register 27	RSCAN0TMC27	00_H	<RSCAN0_base> + $026B_H$	8
Transmit buffer control register 28	RSCAN0TMC28	00_H	<RSCAN0_base> + $026C_H$	8
Transmit buffer control register 29	RSCAN0TMC29	00_H	<RSCAN0_base> + $026D_H$	8
Transmit buffer control register 30	RSCAN0TMC30	00_H	<RSCAN0_base> + $026E_H$	8
Transmit buffer control register 31	RSCAN0TMC31	00_H	<RSCAN0_base> + $026F_H$	8
Transmit buffer control register 32*1	RSCAN0TMC32	00_H	<RSCAN0_base> + 0270_H	8
Transmit buffer control register 33*1	RSCAN0TMC33	00_H	<RSCAN0_base> + 0271_H	8
Transmit buffer control register 34*1	RSCAN0TMC34	00_H	<RSCAN0_base> + 0272_H	8
Transmit buffer control register 35*1	RSCAN0TMC35	00_H	<RSCAN0_base> + 0273_H	8
Transmit buffer control register 36*1	RSCAN0TMC36	00_H	<RSCAN0_base> + 0274_H	8
Transmit buffer control register 37*1	RSCAN0TMC37	00_H	<RSCAN0_base> + 0275_H	8
Transmit buffer control register 38*1	RSCAN0TMC38	00_H	<RSCAN0_base> + 0276_H	8
Transmit buffer control register 39*1	RSCAN0TMC39	00_H	<RSCAN0_base> + 0277_H	8
Transmit buffer control register 40*1	RSCAN0TMC40	00_H	<RSCAN0_base> + 0278_H	8
Transmit buffer control register 41*1	RSCAN0TMC41	00_H	<RSCAN0_base> + 0279_H	8
Transmit buffer control register 42*1	RSCAN0TMC42	00_H	<RSCAN0_base> + $027A_H$	8
Transmit buffer control register 43*1	RSCAN0TMC43	00_H	<RSCAN0_base> + $027B_H$	8
Transmit buffer control register 44*1	RSCAN0TMC44	00_H	<RSCAN0_base> + $027C_H$	8
Transmit buffer control register 45*1	RSCAN0TMC45	00_H	<RSCAN0_base> + $027D_H$	8
Transmit buffer control register 46*1	RSCAN0TMC46	00_H	<RSCAN0_base> + $027E_H$	8
Transmit buffer control register 47*1	RSCAN0TMC47	00_H	<RSCAN0_base> + $027F_H$	8
Transmit buffer status register 0	RSCAN0TMSTS0	00_H	<RSCAN0_base> + $02D0_H$	8
Transmit buffer status register 1	RSCAN0TMSTS1	00_H	<RSCAN0_base> + $02D1_H$	8
Transmit buffer status register 2	RSCAN0TMSTS2	00_H	<RSCAN0_base> + $02D2_H$	8
Transmit buffer status register 3	RSCAN0TMSTS3	00_H	<RSCAN0_base> + $02D3_H$	8
Transmit buffer status register 4	RSCAN0TMSTS4	00_H	<RSCAN0_base> + $02D4_H$	8
Transmit buffer status register 5	RSCAN0TMSTS5	00_H	<RSCAN0_base> + $02D5_H$	8
Transmit buffer status register 6	RSCAN0TMSTS6	00_H	<RSCAN0_base> + $02D6_H$	8
Transmit buffer status register 7	RSCAN0TMSTS7	00_H	<RSCAN0_base> + $02D7_H$	8
Transmit buffer status register 8	RSCAN0TMSTS8	00_H	<RSCAN0_base> + $02D8_H$	8
Transmit buffer status register 9	RSCAN0TMSTS9	00_H	<RSCAN0_base> + $02D9_H$	8

Table 17.12 Registers (4/17)

Register	Symbol	Value after Reset	Address	Access Size
Transmit buffer status register 10	RSCAN0TMSTS10	00_H	<RSCAN0_base> + $02DA_H$	8
Transmit buffer status register 11	RSCAN0TMSTS11	00_H	<RSCAN0_base> + $02DB_H$	8
Transmit buffer status register 12	RSCAN0TMSTS12	00_H	<RSCAN0_base> + $02DC_H$	8
Transmit buffer status register 13	RSCAN0TMSTS13	00_H	<RSCAN0_base> + $02DD_H$	8
Transmit buffer status register 14	RSCAN0TMSTS14	00_H	<RSCAN0_base> + $02DE_H$	8
Transmit buffer status register 15	RSCAN0TMSTS15	00_H	<RSCAN0_base> + $02DF_H$	8
Transmit buffer status register 16	RSCAN0TMSTS16	00_H	<RSCAN0_base> + $02E0_H$	8
Transmit buffer status register 17	RSCAN0TMSTS17	00_H	<RSCAN0_base> + $02E1_H$	8
Transmit buffer status register 18	RSCAN0TMSTS18	00_H	<RSCAN0_base> + $02E2_H$	8
Transmit buffer status register 19	RSCAN0TMSTS19	00_H	<RSCAN0_base> + $02E3_H$	8
Transmit buffer status register 20	RSCAN0TMSTS20	00_H	<RSCAN0_base> + $02E4_H$	8
Transmit buffer status register 21	RSCAN0TMSTS21	00_H	<RSCAN0_base> + $02E5_H$	8
Transmit buffer status register 22	RSCAN0TMSTS22	00_H	<RSCAN0_base> + $02E6_H$	8
Transmit buffer status register 23	RSCAN0TMSTS23	00_H	<RSCAN0_base> + $02E7_H$	8
Transmit buffer status register 24	RSCAN0TMSTS24	00_H	<RSCAN0_base> + $02E8_H$	8
Transmit buffer status register 25	RSCAN0TMSTS25	00_H	<RSCAN0_base> + $02E9_H$	8
Transmit buffer status register 26	RSCAN0TMSTS26	00_H	<RSCAN0_base> + $02EA_H$	8
Transmit buffer status register 27	RSCAN0TMSTS27	00_H	<RSCAN0_base> + $02EB_H$	8
Transmit buffer status register 28	RSCAN0TMSTS28	00_H	<RSCAN0_base> + $02EC_H$	8
Transmit buffer status register 29	RSCAN0TMSTS29	00_H	<RSCAN0_base> + $02ED_H$	8
Transmit buffer status register 30	RSCAN0TMSTS30	00_H	<RSCAN0_base> + $02EE_H$	8
Transmit buffer status register 31	RSCAN0TMSTS31	00_H	<RSCAN0_base> + $02EF_H$	8
Transmit buffer status register 32*1	RSCAN0TMSTS32	00_H	<RSCAN0_base> + $02F0_H$	8
Transmit buffer status register 33*1	RSCAN0TMSTS33	00_H	<RSCAN0_base> + $02F1_H$	8
Transmit buffer status register 34*1	RSCAN0TMSTS34	00_H	<RSCAN0_base> + $02F2_H$	8
Transmit buffer status register 35*1	RSCAN0TMSTS35	00_H	<RSCAN0_base> + $02F3_H$	8
Transmit buffer status register 36*1	RSCAN0TMSTS36	00_H	<RSCAN0_base> + $02F4_H$	8
Transmit buffer status register 37*1	RSCAN0TMSTS37	00_H	<RSCAN0_base> + $02F5_H$	8
Transmit buffer status register 38*1	RSCAN0TMSTS38	00_H	<RSCAN0_base> + $02F6_H$	8
Transmit buffer status register 39*1	RSCAN0TMSTS39	00_H	<RSCAN0_base> + $02F7_H$	8
Transmit buffer status register 40*1	RSCAN0TMSTS40	00_H	<RSCAN0_base> + $02F8_H$	8
Transmit buffer status register 41*1	RSCAN0TMSTS41	00_H	<RSCAN0_base> + $02F9_H$	8
Transmit buffer status register 42*1	RSCAN0TMSTS42	00_H	<RSCAN0_base> + $02FA_H$	8
Transmit buffer status register 43*1	RSCAN0TMSTS43	00_H	<RSCAN0_base> + $02FB_H$	8
Transmit buffer status register 44*1	RSCAN0TMSTS44	00_H	<RSCAN0_base> + $02FC_H$	8
Transmit buffer status register 45*1	RSCAN0TMSTS45	00_H	<RSCAN0_base> + $02FD_H$	8
Transmit buffer status register 46*1	RSCAN0TMSTS46	00_H	<RSCAN0_base> + $02FE_H$	8
Transmit buffer status register 47*1	RSCAN0TMSTS47	00_H	<RSCAN0_base> + $02FF_H$	8
Transmit buffer transmit request status register 0	RSCAN0TMTRSTS0	$0000\ 0000_H$	<RSCAN0_base> + 0350_H	8, 16, 32
Transmit buffer transmit request status register 1*1	RSCAN0TMTRSTS1	$0000\ 0000_H$	<RSCAN0_base> + 0354_H	8, 16, 32
Transmit buffer transmit abort request status register 0	RSCAN0TMTARSTS0	$0000\ 0000_H$	<RSCAN0_base> + 0360_H	8, 16, 32
Transmit buffer transmit abort request status register 1*1	RSCAN0TMTARSTS1	$0000\ 0000_H$	<RSCAN0_base> + 0364_H	8, 16, 32
Transmit buffer transmit complete status register 0	RSCAN0TMTCSTS0	$0000\ 0000_H$	<RSCAN0_base> + 0370_H	8, 16, 32
Transmit buffer transmit complete status register 1*1	RSCAN0TMTCSTS1	$0000\ 0000_H$	<RSCAN0_base> + 0374_H	8, 16, 32
Transmit buffer transmit abort status register 0	RSCAN0TMTASTS0	$0000\ 0000_H$	<RSCAN0_base> + 0380_H	8, 16, 32
Transmit buffer transmit abort status register 1*1	RSCAN0TMTASTS1	$0000\ 0000_H$	<RSCAN0_base> + 0384_H	8, 16, 32
Transmit buffer interrupt enable configuration register 0	RSCAN0TMIEC0	$0000\ 0000_H$	<RSCAN0_base> + 0390_H	8, 16, 32
Transmit buffer interrupt enable configuration register 1*1	RSCAN0TMIEC1	$0000\ 0000_H$	<RSCAN0_base> + 0394_H	8, 16, 32
Transmit queue configuration and control register 0	RSCAN0TXQCC0	$0000\ 0000_H$	<RSCAN0_base> + $03A0_H$	8, 16, 32

Table 17.12 Registers (5/17)

Register	Symbol	Value after Reset	Address	Access Size
Transmit queue configuration and control register 1	RSCAN0TXQCC1	$0000\ 0000_H$	<RSCAN0_base> + $03A4_H$	8, 16, 32
Transmit queue configuration and control register 2*1	RSCAN0TXQCC2	$0000\ 0000_H$	<RSCAN0_base> + $03A8_H$	8, 16, 32
Transmit queue status register 0	RSCAN0TXQSTS0	$0000\ 0001_H$	<RSCAN0_base> + $03C0_H$	8, 16, 32
Transmit queue status register 1	RSCAN0TXQSTS1	$0000\ 0001_H$	<RSCAN0_base> + $03C4_H$	8, 16, 32
Transmit queue status register 2*1	RSCAN0TXQSTS2	$0000\ 0001_H$	<RSCAN0_base> + $03C8_H$	8, 16, 32
Transmit queue pointer control register 0	RSCAN0TXQPCTR0	$0000\ 0000_H$	<RSCAN0_base> + $03E0_H$	8, 16, 32
Transmit queue pointer control register 1	RSCAN0TXQPCTR1	$0000\ 0000_H$	<RSCAN0_base> + $03E4_H$	8, 16, 32
Transmit queue pointer control register 2*1	RSCAN0TXQPCTR2	$0000\ 0000_H$	<RSCAN0_base> + $03E8_H$	8, 16, 32
Transmit history configuration and control register 0	RSCAN0THLCC0	$0000\ 0000_H$	<RSCAN0_base> + 0400_H	8, 16, 32
Transmit history configuration and control register 1	RSCAN0THLCC1	$0000\ 0000_H$	<RSCAN0_base> + 0404_H	8, 16, 32
Transmit history configuration and control register 2*1	RSCAN0THLCC2	$0000\ 0000_H$	<RSCAN0_base> + 0408_H	8, 16, 32
Transmit history status register 0	RSCAN0THLSTS0	$0000\ 0001_H$	<RSCAN0_base> + 0420_H	8, 16, 32
Transmit history status register 1	RSCAN0THLSTS1	$0000\ 0001_H$	<RSCAN0_base> + 0424_H	8, 16, 32
Transmit history status register 2*1	RSCAN0THLSTS2	$0000\ 0001_H$	<RSCAN0_base> + 0428_H	8, 16, 32
Transmit history pointer control register 0	RSCAN0THLPCTR0	$0000\ 0000_H$	<RSCAN0_base> + 0440_H	8, 16, 32
Transmit history pointer control register 1	RSCAN0THLPCTR1	$0000\ 0000_H$	<RSCAN0_base> + 0444_H	8, 16, 32
Transmit history pointer control register 2*1	RSCAN0THLPCTR2	$0000\ 0000_H$	<RSCAN0_base> + 0448_H	8, 16, 32
Global TX interrupt status register 0	RSCAN0GTINTSTS0	$0000\ 0000_H$	<RSCAN0_base> + 0460_H	8, 16, 32
Global test configuration register	RSCAN0GTSTCFG	$0000\ 0000_H$	<RSCAN0_base> + 0468_H	8, 16, 32
Global test control register	RSCAN0GTSTCTR	$0000\ 0000_H$	<RSCAN0_base> + $046C_H$	8, 16, 32
Global lock key register	RSCAN0GLOCKK	$0000\ 0000_H$	<RSCAN0_base> + $047C_H$	16, 32
Receive rule ID register 0	RSCAN0GAFLID0	$0000\ 0000_H$	<RSCAN0_base> + 0500_H	8, 16, 32
Receive rule mask register 0	RSCAN0GAFLM0	$0000\ 0000_H$	<RSCAN0_base> + 0504_H	8, 16, 32
Receive rule pointer 0 register 0	RSCAN0GAFLP00	$0000\ 0000_H$	<RSCAN0_base> + 0508_H	8, 16, 32
Receive rule pointer 1 register 0	RSCAN0GAFLP10	$0000\ 0000_H$	<RSCAN0_base> + $050C_H$	8, 16, 32
Receive rule ID register 1	RSCAN0GAFLID1	$0000\ 0000_H$	<RSCAN0_base> + 0510_H	8, 16, 32
Receive rule mask register 1	RSCAN0GAFLM1	$0000\ 0000_H$	<RSCAN0_base> + 0514_H	8, 16, 32
Receive rule pointer 0 register 1	RSCAN0GAFLP01	$0000\ 0000_H$	<RSCAN0_base> + 0518_H	8, 16, 32
Receive rule pointer 1 register 1	RSCAN0GAFLP11	$0000\ 0000_H$	<RSCAN0_base> + $051C_H$	8, 16, 32
Receive rule ID register 2	RSCAN0GAFLID2	$0000\ 0000_H$	<RSCAN0_base> + 0520_H	8, 16, 32
Receive rule mask register 2	RSCAN0GAFLM2	$0000\ 0000_H$	<RSCAN0_base> + 0524_H	8, 16, 32
Receive rule pointer 0 register 2	RSCAN0GAFLP02	$0000\ 0000_H$	<RSCAN0_base> + 0528_H	8, 16, 32
Receive rule pointer 1 register 2	RSCAN0GAFLP12	$0000\ 0000_H$	<RSCAN0_base> + $052C_H$	8, 16, 32
Receive rule ID register 3	RSCAN0GAFLID3	$0000\ 0000_H$	<RSCAN0_base> + 0530_H	8, 16, 32
Receive rule mask register 3	RSCAN0GAFLM3	$0000\ 0000_H$	<RSCAN0_base> + 0534_H	8, 16, 32
Receive rule pointer 0 register 3	RSCAN0GAFLP03	$0000\ 0000_H$	<RSCAN0_base> + 0538_H	8, 16, 32
Receive rule pointer 1 register 3	RSCAN0GAFLP13	$0000\ 0000_H$	<RSCAN0_base> + $053C_H$	8, 16, 32
Receive rule ID register 4	RSCAN0GAFLID4	$0000\ 0000_H$	<RSCAN0_base> + 0540_H	8, 16, 32
Receive rule mask register 4	RSCAN0GAFLM4	$0000\ 0000_H$	<RSCAN0_base> + 0544_H	8, 16, 32
Receive rule pointer 0 register 4	RSCAN0GAFLP04	$0000\ 0000_H$	<RSCAN0_base> + 0548_H	8, 16, 32
Receive rule pointer 1 register 4	RSCAN0GAFLP14	$0000\ 0000_H$	<RSCAN0_base> + $054C_H$	8, 16, 32
Receive rule ID register 5	RSCAN0GAFLID5	$0000\ 0000_H$	<RSCAN0_base> + 0550_H	8, 16, 32
Receive rule mask register 5	RSCAN0GAFLM5	$0000\ 0000_H$	<RSCAN0_base> + 0554_H	8, 16, 32
Receive rule pointer 0 register 5	RSCAN0GAFLP05	$0000\ 0000_H$	<RSCAN0_base> + 0558_H	8, 16, 32
Receive rule pointer 1 register 5	RSCAN0GAFLP15	$0000\ 0000_H$	<RSCAN0_base> + $055C_H$	8, 16, 32
Receive rule ID register 6	RSCAN0GAFLID6	$0000\ 0000_H$	<RSCAN0_base> + 0560_H	8, 16, 32
Receive rule mask register 6	RSCAN0GAFLM6	$0000\ 0000_H$	<RSCAN0_base> + 0564_H	8, 16, 32
Receive rule pointer 0 register 6	RSCAN0GAFLP06	$0000\ 0000_H$	<RSCAN0_base> + 0568_H	8, 16, 32
Receive rule pointer 1 register 6	RSCAN0GAFLP16	$0000\ 0000_H$	<RSCAN0_base> + $056C_H$	8, 16, 32

Table 17.12 Registers (6/17)

Register	Symbol	Value after Reset	Address	Access Size
Receive rule ID register 7	RSCAN0GAFLID7	0000 0000_H	<RSCAN0_base> + 0570_H	8, 16, 32
Receive rule mask register 7	RSCAN0GAFLM7	0000 0000_H	<RSCAN0_base> + 0574_H	8, 16, 32
Receive rule pointer 0 register 7	RSCAN0GAFLP07	0000 0000_H	<RSCAN0_base> + 0578_H	8, 16, 32
Receive rule pointer 1 register 7	RSCAN0GAFLP17	0000 0000_H	<RSCAN0_base> + $057C_H$	8, 16, 32
Receive rule ID register 8	RSCAN0GAFLID8	0000 0000_H	<RSCAN0_base> + 0580_H	8, 16, 32
Receive rule mask register 8	RSCAN0GAFLM8	0000 0000_H	<RSCAN0_base> + 0584_H	8, 16, 32
Receive rule pointer 0 register 8	RSCAN0GAFLP08	0000 0000_H	<RSCAN0_base> + 0588_H	8, 16, 32
Receive rule pointer 1 register 8	RSCAN0GAFLP18	0000 0000_H	<RSCAN0_base> + $058C_H$	8, 16, 32
Receive rule ID register 9	RSCAN0GAFLID9	0000 0000_H	<RSCAN0_base> + 0590_H	8, 16, 32
Receive rule mask register 9	RSCAN0GAFLM9	0000 0000_H	<RSCAN0_base> + 0594_H	8, 16, 32
Receive rule pointer 0 register 9	RSCAN0GAFLP09	0000 0000_H	<RSCAN0_base> + 0598_H	8, 16, 32
Receive rule pointer 1 register 9	RSCAN0GAFLP19	0000 0000_H	<RSCAN0_base> + $059C_H$	8, 16, 32
Receive rule ID register 10	RSCAN0GAFLID10	0000 0000_H	<RSCAN0_base> + $05A0_H$	8, 16, 32
Receive rule mask register 10	RSCAN0GAFLM10	0000 0000_H	<RSCAN0_base> + $05A4_H$	8, 16, 32
Receive rule pointer 0 register 10	RSCAN0GAFLP010	0000 0000_H	<RSCAN0_base> + $05A8_H$	8, 16, 32
Receive rule pointer 1 register 10	RSCAN0GAFLP110	0000 0000_H	<RSCAN0_base> + $05AC_H$	8, 16, 32
Receive rule ID register 11	RSCAN0GAFLID11	0000 0000_H	<RSCAN0_base> + $05B0_H$	8, 16, 32
Receive rule mask register 11	RSCAN0GAFLM11	0000 0000_H	<RSCAN0_base> + $05B4_H$	8, 16, 32
Receive rule pointer 0 register 11	RSCAN0GAFLP011	0000 0000_H	<RSCAN0_base> + $05B8_H$	8, 16, 32
Receive rule pointer 1 register 11	RSCAN0GAFLP111	0000 0000_H	<RSCAN0_base> + $05BC_H$	8, 16, 32
Receive rule ID register 12	RSCAN0GAFLID12	0000 0000_H	<RSCAN0_base> + $05C0_H$	8, 16, 32
Receive rule mask register 12	RSCAN0GAFLM12	0000 0000_H	<RSCAN0_base> + $05C4_H$	8, 16, 32
Receive rule pointer 0 register 12	RSCAN0GAFLP012	0000 0000_H	<RSCAN0_base> + $05C8_H$	8, 16, 32
Receive rule pointer 1 register 12	RSCAN0GAFLP112	0000 0000_H	<RSCAN0_base> + $05CC_H$	8, 16, 32
Receive rule ID register 13	RSCAN0GAFLID13	0000 0000_H	<RSCAN0_base> + $05D0_H$	8, 16, 32
Receive rule mask register 13	RSCAN0GAFLM13	0000 0000_H	<RSCAN0_base> + $05D4_H$	8, 16, 32
Receive rule pointer 0 register 13	RSCAN0GAFLP013	0000 0000_H	<RSCAN0_base> + $05D8_H$	8, 16, 32
Receive rule pointer 1 register 13	RSCAN0GAFLP113	0000 0000_H	<RSCAN0_base> + $05DC_H$	8, 16, 32
Receive rule ID register 14	RSCAN0GAFLID14	0000 0000_H	<RSCAN0_base> + $05E0_H$	8, 16, 32
Receive rule mask register 14	RSCAN0GAFLM14	0000 0000_H	<RSCAN0_base> + $05E4_H$	8, 16, 32
Receive rule pointer 0 register 14	RSCAN0GAFLP014	0000 0000_H	<RSCAN0_base> + $05E8_H$	8, 16, 32
Receive rule pointer 1 register 14	RSCAN0GAFLP114	0000 0000_H	<RSCAN0_base> + $05EC_H$	8, 16, 32
Receive rule ID register 15	RSCAN0GAFLID15	0000 0000_H	<RSCAN0_base> + $05F0_H$	8, 16, 32
Receive rule mask register 15	RSCAN0GAFLM15	0000 0000_H	<RSCAN0_base> + $05F4_H$	8, 16, 32
Receive rule pointer 0 register 15	RSCAN0GAFLP015	0000 0000_H	<RSCAN0_base> + $05F8_H$	8, 16, 32
Receive rule pointer 1 register 15	RSCAN0GAFLP115	0000 0000_H	<RSCAN0_base> + $05FC_H$	8, 16, 32
Receive buffer ID register 0	RSCAN0RMID0	0000 0000_H	<RSCAN0_base> + 0600_H	8, 16, 32
Receive buffer pointer register 0	RSCAN0RMPTR0	0000 0000_H	<RSCAN0_base> + 0604_H	8, 16, 32
Receive buffer data field 0 register 0	RSCAN0RMDF00	0000 0000_H	<RSCAN0_base> + 0608_H	8, 16, 32
Receive buffer data field 1 register 0	RSCAN0RMDF10	0000 0000_H	<RSCAN0_base> + $060C_H$	8, 16, 32
Receive buffer ID register 1	RSCAN0RMID1	0000 0000_H	<RSCAN0_base> + 0610_H	8, 16, 32
Receive buffer pointer register 1	RSCAN0RMPTR1	0000 0000_H	<RSCAN0_base> + 0614_H	8, 16, 32
Receive buffer data field 0 register 1	RSCAN0RMDF01	0000 0000_H	<RSCAN0_base> + 0618_H	8, 16, 32
Receive buffer data field 1 register 1	RSCAN0RMDF11	0000 0000_H	<RSCAN0_base> + $061C_H$	8, 16, 32
Receive buffer ID register 2	RSCAN0RMID2	0000 0000_H	<RSCAN0_base> + 0620_H	8, 16, 32
Receive buffer pointer register 2	RSCAN0RMPTR2	0000 0000_H	<RSCAN0_base> + 0624_H	8, 16, 32
Receive buffer data field 0 register 2	RSCAN0RMDF02	0000 0000_H	<RSCAN0_base> + 0628_H	8, 16, 32
Receive buffer data field 1 register 2	RSCAN0RMDF12	0000 0000_H	<RSCAN0_base> + $062C_H$	8, 16, 32
Receive buffer ID register 3	RSCAN0RMID3	0000 0000_H	<RSCAN0_base> + 0630_H	8, 16, 32

Table 17.12 Registers (7/17)

Register	Symbol	Value after Reset	Address	Access Size
Receive buffer pointer register 3	RSCAN0RMPTR3	0000 0000_H	<RSCAN0_base> + 0634_H	8, 16, 32
Receive buffer data field 0 register 3	RSCAN0RMDF03	0000 0000_H	<RSCAN0_base> + 0638_H	8, 16, 32
Receive buffer data field 1 register 3	RSCAN0RMDF13	0000 0000_H	<RSCAN0_base> + $063C_H$	8, 16, 32
Receive buffer ID register 4	RSCAN0RMID4	0000 0000_H	<RSCAN0_base> + 0640_H	8, 16, 32
Receive buffer pointer register 4	RSCAN0RMPTR4	0000 0000_H	<RSCAN0_base> + 0644_H	8, 16, 32
Receive buffer data field 0 register 4	RSCAN0RMDF04	0000 0000_H	<RSCAN0_base> + 0648_H	8, 16, 32
Receive buffer data field 1 register 4	RSCAN0RMDF14	0000 0000_H	<RSCAN0_base> + $064C_H$	8, 16, 32
Receive buffer ID register 5	RSCAN0RMID5	0000 0000_H	<RSCAN0_base> + 0650_H	8, 16, 32
Receive buffer pointer register 5	RSCAN0RMPTR5	0000 0000_H	<RSCAN0_base> + 0654_H	8, 16, 32
Receive buffer data field 0 register 5	RSCAN0RMDF05	0000 0000_H	<RSCAN0_base> + 0658_H	8, 16, 32
Receive buffer data field 1 register 5	RSCAN0RMDF15	0000 0000_H	<RSCAN0_base> + $065C_H$	8, 16, 32
Receive buffer ID register 6	RSCAN0RMID6	0000 0000_H	<RSCAN0_base> + 0660_H	8, 16, 32
Receive buffer pointer register 6	RSCAN0RMPTR6	0000 0000_H	<RSCAN0_base> + 0664_H	8, 16, 32
Receive buffer data field 0 register 6	RSCAN0RMDF06	0000 0000_H	<RSCAN0_base> + 0668_H	8, 16, 32
Receive buffer data field 1 register 6	RSCAN0RMDF16	0000 0000_H	<RSCAN0_base> + $066C_H$	8, 16, 32
Receive buffer ID register 7	RSCAN0RMID7	0000 0000_H	<RSCAN0_base> + 0670_H	8, 16, 32
Receive buffer pointer register 7	RSCAN0RMPTR7	0000 0000_H	<RSCAN0_base> + 0674_H	8, 16, 32
Receive buffer data field 0 register 7	RSCAN0RMDF07	0000 0000_H	<RSCAN0_base> + 0678_H	8, 16, 32
Receive buffer data field 1 register 7	RSCAN0RMDF17	0000 0000_H	<RSCAN0_base> + $067C_H$	8, 16, 32
Receive buffer ID register 8	RSCAN0RMID8	0000 0000_H	<RSCAN0_base> + 0680_H	8, 16, 32
Receive buffer pointer register 8	RSCAN0RMPTR8	0000 0000_H	<RSCAN0_base> + 0684_H	8, 16, 32
Receive buffer data field 0 register 8	RSCAN0RMDF08	0000 0000_H	<RSCAN0_base> + 0688_H	8, 16, 32
Receive buffer data field 1 register 8	RSCAN0RMDF18	0000 0000_H	<RSCAN0_base> + $068C_H$	8, 16, 32
Receive buffer ID register 9	RSCAN0RMID9	0000 0000_H	<RSCAN0_base> + 0690_H	8, 16, 32
Receive buffer pointer register 9	RSCAN0RMPTR9	0000 0000_H	<RSCAN0_base> + 0694_H	8, 16, 32
Receive buffer data field 0 register 9	RSCAN0RMDF09	0000 0000_H	<RSCAN0_base> + 0698_H	8, 16, 32
Receive buffer data field 1 register 9	RSCAN0RMDF19	0000 0000_H	<RSCAN0_base> + $069C_H$	8, 16, 32
Receive buffer ID register 10	RSCAN0RMID10	0000 0000_H	<RSCAN0_base> + $06A0_H$	8, 16, 32
Receive buffer pointer register 10	RSCAN0RMPTR10	0000 0000_H	<RSCAN0_base> + $06A4_H$	8, 16, 32
Receive buffer data field 0 register 10	RSCAN0RMDF010	0000 0000_H	<RSCAN0_base> + $06A8_H$	8, 16, 32
Receive buffer data field 1 register 10	RSCAN0RMDF110	0000 0000_H	<RSCAN0_base> + $06AC_H$	8, 16, 32
Receive buffer ID register 11	RSCAN0RMID11	0000 0000_H	<RSCAN0_base> + $06B0_H$	8, 16, 32
Receive buffer pointer register 11	RSCAN0RMPTR11	0000 0000_H	<RSCAN0_base> + $06B4_H$	8, 16, 32
Receive buffer data field 0 register 11	RSCAN0RMDF011	0000 0000_H	<RSCAN0_base> + $06B8_H$	8, 16, 32
Receive buffer data field 1 register 11	RSCAN0RMDF111	0000 0000_H	<RSCAN0_base> + $06BC_H$	8, 16, 32
Receive buffer ID register 12	RSCAN0RMID12	0000 0000_H	<RSCAN0_base> + $06C0_H$	8, 16, 32
Receive buffer pointer register 12	RSCAN0RMPTR12	0000 0000_H	<RSCAN0_base> + $06C4_H$	8, 16, 32
Receive buffer data field 0 register 12	RSCAN0RMDF012	0000 0000_H	<RSCAN0_base> + $06C8_H$	8, 16, 32
Receive buffer data field 1 register 12	RSCAN0RMDF112	0000 0000_H	<RSCAN0_base> + $06CC_H$	8, 16, 32
Receive buffer ID register 13	RSCAN0RMID13	0000 0000_H	<RSCAN0_base> + $06D0_H$	8, 16, 32
Receive buffer pointer register 13	RSCAN0RMPTR13	0000 0000_H	<RSCAN0_base> + $06D4_H$	8, 16, 32
Receive buffer data field 0 register 13	RSCAN0RMDF013	0000 0000_H	<RSCAN0_base> + $06D8_H$	8, 16, 32
Receive buffer data field 1 register 13	RSCAN0RMDF113	0000 0000_H	<RSCAN0_base> + $06DC_H$	8, 16, 32
Receive buffer ID register 14	RSCAN0RMID14	0000 0000_H	<RSCAN0_base> + $06E0_H$	8, 16, 32
Receive buffer pointer register 14	RSCAN0RMPTR14	0000 0000_H	<RSCAN0_base> + $06E4_H$	8, 16, 32
Receive buffer data field 0 register 14	RSCAN0RMDF014	0000 0000_H	<RSCAN0_base> + $06E8_H$	8, 16, 32
Receive buffer data field 1 register 14	RSCAN0RMDF114	0000 0000_H	<RSCAN0_base> + $06EC_H$	8, 16, 32
Receive buffer ID register 15	RSCAN0RMID15	0000 0000_H	<RSCAN0_base> + $06F0_H$	8, 16, 32
Receive buffer pointer register 15	RSCAN0RMPTR15	0000 0000_H	<RSCAN0_base> + $06F4_H$	8, 16, 32

Table 17.12 Registers (8/17)

Register	Symbol	Value after Reset	Address	Access Size
Receive buffer data field 0 register 15	RSCAN0RMDF015	0000 0000_H	<RSCAN0_base> + $06F8_H$	8, 16, 32
Receive buffer data field 1 register 15	RSCAN0RMDF115	0000 0000_H	<RSCAN0_base> + $06FC_H$	8, 16, 32
Receive buffer ID register 16	RSCAN0RMID16	0000 0000_H	<RSCAN0_base> + 0700_H	8, 16, 32
Receive buffer pointer register 16	RSCAN0RMPTR16	0000 0000_H	<RSCAN0_base> + 0704_H	8, 16, 32
Receive buffer data field 0 register 16	RSCAN0RMDF016	0000 0000_H	<RSCAN0_base> + 0708_H	8, 16, 32
Receive buffer data field 1 register 16	RSCAN0RMDF116	0000 0000_H	<RSCAN0_base> + $070C_H$	8, 16, 32
Receive buffer ID register 17	RSCAN0RMID17	0000 0000_H	<RSCAN0_base> + 0710_H	8, 16, 32
Receive buffer pointer register 17	RSCAN0RMPTR17	0000 0000_H	<RSCAN0_base> + 0714_H	8, 16, 32
Receive buffer data field 0 register 17	RSCAN0RMDF017	0000 0000_H	<RSCAN0_base> + 0718_H	8, 16, 32
Receive buffer data field 1 register 17	RSCAN0RMDF117	0000 0000_H	<RSCAN0_base> + $071C_H$	8, 16, 32
Receive buffer ID register 18	RSCAN0RMID18	0000 0000_H	<RSCAN0_base> + 0720_H	8, 16, 32
Receive buffer pointer register 18	RSCAN0RMPTR18	0000 0000_H	<RSCAN0_base> + 0724_H	8, 16, 32
Receive buffer data field 0 register 18	RSCAN0RMDF018	0000 0000_H	<RSCAN0_base> + 0728_H	8, 16, 32
Receive buffer data field 1 register 18	RSCAN0RMDF118	0000 0000_H	<RSCAN0_base> + $072C_H$	8, 16, 32
Receive buffer ID register 19	RSCAN0RMID19	0000 0000_H	<RSCAN0_base> + 0730_H	8, 16, 32
Receive buffer pointer register 19	RSCAN0RMPTR19	0000 0000_H	<RSCAN0_base> + 0734_H	8, 16, 32
Receive buffer data field 0 register 19	RSCAN0RMDF019	0000 0000_H	<RSCAN0_base> + 0738_H	8, 16, 32
Receive buffer data field 1 register 19	RSCAN0RMDF119	0000 0000_H	<RSCAN0_base> + $073C_H$	8, 16, 32
Receive buffer ID register 20	RSCAN0RMID20	0000 0000_H	<RSCAN0_base> + 0740_H	8, 16, 32
Receive buffer pointer register 20	RSCAN0RMPTR20	0000 0000_H	<RSCAN0_base> + 0744_H	8, 16, 32
Receive buffer data field 0 register 20	RSCAN0RMDF020	0000 0000_H	<RSCAN0_base> + 0748_H	8, 16, 32
Receive buffer data field 1 register 20	RSCAN0RMDF120	0000 0000_H	<RSCAN0_base> + $074C_H$	8, 16, 32
Receive buffer ID register 21	RSCAN0RMID21	0000 0000_H	<RSCAN0_base> + 0750_H	8, 16, 32
Receive buffer pointer register 21	RSCAN0RMPTR21	0000 0000_H	<RSCAN0_base> + 0754_H	8, 16, 32
Receive buffer data field 0 register 21	RSCAN0RMDF021	0000 0000_H	<RSCAN0_base> + 0758_H	8, 16, 32
Receive buffer data field 1 register 21	RSCAN0RMDF121	0000 0000_H	<RSCAN0_base> + $075C_H$	8, 16, 32
Receive buffer ID register 22	RSCAN0RMID22	0000 0000_H	<RSCAN0_base> + 0760_H	8, 16, 32
Receive buffer pointer register 22	RSCAN0RMPTR22	0000 0000_H	<RSCAN0_base> + 0764_H	8, 16, 32
Receive buffer data field 0 register 22	RSCAN0RMDF022	0000 0000_H	<RSCAN0_base> + 0768_H	8, 16, 32
Receive buffer data field 1 register 22	RSCAN0RMDF122	0000 0000_H	<RSCAN0_base> + $076C_H$	8, 16, 32
Receive buffer ID register 23	RSCAN0RMID23	0000 0000_H	<RSCAN0_base> + 0770_H	8, 16, 32
Receive buffer pointer register 23	RSCAN0RMPTR23	0000 0000_H	<RSCAN0_base> + 0774_H	8, 16, 32
Receive buffer data field 0 register 23	RSCAN0RMDF023	0000 0000_H	<RSCAN0_base> + 0778_H	8, 16, 32
Receive buffer data field 1 register 23	RSCAN0RMDF123	0000 0000_H	<RSCAN0_base> + $077C_H$	8, 16, 32
Receive buffer ID register 24	RSCAN0RMID24	0000 0000_H	<RSCAN0_base> + 0780_H	8, 16, 32
Receive buffer pointer register 24	RSCAN0RMPTR24	0000 0000_H	<RSCAN0_base> + 0784_H	8, 16, 32
Receive buffer data field 0 register 24	RSCAN0RMDF024	0000 0000_H	<RSCAN0_base> + 0788_H	8, 16, 32
Receive buffer data field 1 register 24	RSCAN0RMDF124	0000 0000_H	<RSCAN0_base> + $078C_H$	8, 16, 32
Receive buffer ID register 25	RSCAN0RMID25	0000 0000_H	<RSCAN0_base> + 0790_H	8, 16, 32
Receive buffer pointer register 25	RSCAN0RMPTR25	0000 0000_H	<RSCAN0_base> + 0794_H	8, 16, 32
Receive buffer data field 0 register 25	RSCAN0RMDF025	0000 0000_H	<RSCAN0_base> + 0798_H	8, 16, 32
Receive buffer data field 1 register 25	RSCAN0RMDF125	0000 0000_H	<RSCAN0_base> + $079C_H$	8, 16, 32
Receive buffer ID register 26	RSCAN0RMID26	0000 0000_H	<RSCAN0_base> + $07A0_H$	8, 16, 32
Receive buffer pointer register 26	RSCAN0RMPTR26	0000 0000_H	<RSCAN0_base> + $07A4_H$	8, 16, 32
Receive buffer data field 0 register 26	RSCAN0RMDF026	0000 0000_H	<RSCAN0_base> + $07A8_H$	8, 16, 32
Receive buffer data field 1 register 26	RSCAN0RMDF126	0000 0000_H	<RSCAN0_base> + $07AC_H$	8, 16, 32
Receive buffer ID register 27	RSCAN0RMID27	0000 0000_H	<RSCAN0_base> + $07B0_H$	8, 16, 32
Receive buffer pointer register 27	RSCAN0RMPTR27	0000 0000_H	<RSCAN0_base> + $07B4_H$	8, 16, 32
Receive buffer data field 0 register 27	RSCAN0RMDF027	0000 0000_H	<RSCAN0_base> + $07B8_H$	8, 16, 32

Table 17.12 Registers (9/17)

Register	Symbol	Value after Reset	Address	Access Size
Receive buffer data field 1 register 27	RSCAN0RMDF127	$0000\ 0000_H$	<RSCAN0_base> + $07BC_H$	8, 16, 32
Receive buffer ID register 28	RSCAN0RMID28	$0000\ 0000_H$	<RSCAN0_base> + $07C0_H$	8, 16, 32
Receive buffer pointer register 28	RSCAN0RMPTR28	$0000\ 0000_H$	<RSCAN0_base> + $07C4_H$	8, 16, 32
Receive buffer data field 0 register 28	RSCAN0RMDF028	$0000\ 0000_H$	<RSCAN0_base> + $07C8_H$	8, 16, 32
Receive buffer data field 1 register 28	RSCAN0RMDF128	$0000\ 0000_H$	<RSCAN0_base> + $07CC_H$	8, 16, 32
Receive buffer ID register 29	RSCAN0RMID29	$0000\ 0000_H$	<RSCAN0_base> + $07D0_H$	8, 16, 32
Receive buffer pointer register 29	RSCAN0RMPTR29	$0000\ 0000_H$	<RSCAN0_base> + $07D4_H$	8, 16, 32
Receive buffer data field 0 register 29	RSCAN0RMDF029	$0000\ 0000_H$	<RSCAN0_base> + $07D8_H$	8, 16, 32
Receive buffer data field 1 register 29	RSCAN0RMDF129	$0000\ 0000_H$	<RSCAN0_base> + $07DC_H$	8, 16, 32
Receive buffer ID register 30	RSCAN0RMID30	$0000\ 0000_H$	<RSCAN0_base> + $07E0_H$	8, 16, 32
Receive buffer pointer register 30	RSCAN0RMPTR30	$0000\ 0000_H$	<RSCAN0_base> + $07E4_H$	8, 16, 32
Receive buffer data field 0 register 30	RSCAN0RMDF030	$0000\ 0000_H$	<RSCAN0_base> + $07E8_H$	8, 16, 32
Receive buffer data field 1 register 30	RSCAN0RMDF130	$0000\ 0000_H$	<RSCAN0_base> + $07EC_H$	8, 16, 32
Receive buffer ID register 31	RSCAN0RMID31	$0000\ 0000_H$	<RSCAN0_base> + $07F0_H$	8, 16, 32
Receive buffer pointer register 31	RSCAN0RMPTR31	$0000\ 0000_H$	<RSCAN0_base> + $07F4_H$	8, 16, 32
Receive buffer data field 0 register 31	RSCAN0RMDF031	$0000\ 0000_H$	<RSCAN0_base> + $07F8_H$	8, 16, 32
Receive buffer data field 1 register 31	RSCAN0RMDF131	$0000\ 0000_H$	<RSCAN0_base> + $07FC_H$	8, 16, 32
Receive buffer ID register 32*1	RSCAN0RMID32	$0000\ 0000_H$	<RSCAN0_base> + 0800_H	8, 16, 32
Receive buffer pointer register 32*1	RSCAN0RMPTR32	$0000\ 0000_H$	<RSCAN0_base> + 0804_H	8, 16, 32
Receive buffer data field 0 register 32*1	RSCAN0RMDF032	$0000\ 0000_H$	<RSCAN0_base> + 0808_H	8, 16, 32
Receive buffer data field 1 register 32*1	RSCAN0RMDF132	$0000\ 0000_H$	<RSCAN0_base> + $080C_H$	8, 16, 32
Receive buffer ID register 33*1	RSCAN0RMID33	$0000\ 0000_H$	<RSCAN0_base> + 0810_H	8, 16, 32
Receive buffer pointer register 33*1	RSCAN0RMPTR33	$0000\ 0000_H$	<RSCAN0_base> + 0814_H	8, 16, 32
Receive buffer data field 0 register 33*1	RSCAN0RMDF033	$0000\ 0000_H$	<RSCAN0_base> + 0818_H	8, 16, 32
Receive buffer data field 1 register 33*1	RSCAN0RMDF133	$0000\ 0000_H$	<RSCAN0_base> + $081C_H$	8, 16, 32
Receive buffer ID register 34*1	RSCAN0RMID34	$0000\ 0000_H$	<RSCAN0_base> + 0820_H	8, 16, 32
Receive buffer pointer register 34*1	RSCAN0RMPTR34	$0000\ 0000_H$	<RSCAN0_base> + 0824_H	8, 16, 32
Receive buffer data field 0 register 34*1	RSCAN0RMDF034	$0000\ 0000_H$	<RSCAN0_base> + 0828_H	8, 16, 32
Receive buffer data field 1 register 34*1	RSCAN0RMDF134	$0000\ 0000_H$	<RSCAN0_base> + $082C_H$	8, 16, 32
Receive buffer ID register 35*1	RSCAN0RMID35	$0000\ 0000_H$	<RSCAN0_base> + 0830_H	8, 16, 32
Receive buffer pointer register 35*1	RSCAN0RMPTR35	$0000\ 0000_H$	<RSCAN0_base> + 0834_H	8, 16, 32
Receive buffer data field 0 register 35*1	RSCAN0RMDF035	$0000\ 0000_H$	<RSCAN0_base> + 0838_H	8, 16, 32
Receive buffer data field 1 register 35*1	RSCAN0RMDF135	$0000\ 0000_H$	<RSCAN0_base> + $083C_H$	8, 16, 32
Receive buffer ID register 36*1	RSCAN0RMID36	$0000\ 0000_H$	<RSCAN0_base> + 0840_H	8, 16, 32
Receive buffer pointer register 36*1	RSCAN0RMPTR36	$0000\ 0000_H$	<RSCAN0_base> + 0844_H	8, 16, 32
Receive buffer data field 0 register 36*1	RSCAN0RMDF036	$0000\ 0000_H$	<RSCAN0_base> + 0848_H	8, 16, 32
Receive buffer data field 1 register 36*1	RSCAN0RMDF136	$0000\ 0000_H$	<RSCAN0_base> + $084C_H$	8, 16, 32
Receive buffer ID register 37*1	RSCAN0RMID37	$0000\ 0000_H$	<RSCAN0_base> + 0850_H	8, 16, 32
Receive buffer pointer register 37*1	RSCAN0RMPTR37	$0000\ 0000_H$	<RSCAN0_base> + 0854_H	8, 16, 32
Receive buffer data field 0 register 37*1	RSCAN0RMDF037	$0000\ 0000_H$	<RSCAN0_base> + 0858_H	8, 16, 32
Receive buffer data field 1 register 37*1	RSCAN0RMDF137	$0000\ 0000_H$	<RSCAN0_base> + $085C_H$	8, 16, 32
Receive buffer ID register 38*1	RSCAN0RMID38	$0000\ 0000_H$	<RSCAN0_base> + 0860_H	8, 16, 32
Receive buffer pointer register 38*1	RSCAN0RMPTR38	$0000\ 0000_H$	<RSCAN0_base> + 0864_H	8, 16, 32
Receive buffer data field 0 register 38*1	RSCAN0RMDF038	$0000\ 0000_H$	<RSCAN0_base> + 0868_H	8, 16, 32
Receive buffer data field 1 register 38*1	RSCAN0RMDF138	$0000\ 0000_H$	<RSCAN0_base> + $086C_H$	8, 16, 32
Receive buffer ID register 39*1	RSCAN0RMID39	$0000\ 0000_H$	<RSCAN0_base> + 0870_H	8, 16, 32
Receive buffer pointer register 39*1	RSCAN0RMPTR39	$0000\ 0000_H$	<RSCAN0_base> + 0874_H	8, 16, 32
Receive buffer data field 0 register 39*1	RSCAN0RMDF039	$0000\ 0000_H$	<RSCAN0_base> + 0878_H	8, 16, 32
Receive buffer data field 1 register 39*1	RSCAN0RMDF139	$0000\ 0000_H$	<RSCAN0_base> + $087C_H$	8, 16, 32

Table 17.12 Registers (10/17)

Register	Symbol	Value after Reset	Address	Access Size
Receive buffer ID register 40*1	RSCAN0RMID40	$0000\ 0000_H$	<RSCAN0_base> + 0880_H	8, 16, 32
Receive buffer pointer register 40*1	RSCAN0RMPTR40	$0000\ 0000_H$	<RSCAN0_base> + 0884_H	8, 16, 32
Receive buffer data field 0 register 40*1	RSCAN0RMDF040	$0000\ 0000_H$	<RSCAN0_base> + 0888_H	8, 16, 32
Receive buffer data field 1 register 40*1	RSCAN0RMDF140	$0000\ 0000_H$	<RSCAN0_base> + $088C_H$	8, 16, 32
Receive buffer ID register 41*1	RSCAN0RMID41	$0000\ 0000_H$	<RSCAN0_base> + 0890_H	8, 16, 32
Receive buffer pointer register 41*1	RSCAN0RMPTR41	$0000\ 0000_H$	<RSCAN0_base> + 0894_H	8, 16, 32
Receive buffer data field 0 register 41*1	RSCAN0RMDF041	$0000\ 0000_H$	<RSCAN0_base> + 0898_H	8, 16, 32
Receive buffer data field 1 register 41*1	RSCAN0RMDF141	$0000\ 0000_H$	<RSCAN0_base> + $089C_H$	8, 16, 32
Receive buffer ID register 42*1	RSCAN0RMID42	$0000\ 0000_H$	<RSCAN0_base> + $08A0_H$	8, 16, 32
Receive buffer pointer register 42*1	RSCAN0RMPTR42	$0000\ 0000_H$	<RSCAN0_base> + $08A4_H$	8, 16, 32
Receive buffer data field 0 register 42*1	RSCAN0RMDF042	$0000\ 0000_H$	<RSCAN0_base> + $08A8_H$	8, 16, 32
Receive buffer data field 1 register 42*1	RSCAN0RMDF142	$0000\ 0000_H$	<RSCAN0_base> + $08AC_H$	8, 16, 32
Receive buffer ID register 43*1	RSCAN0RMID43	$0000\ 0000_H$	<RSCAN0_base> + $08B0_H$	8, 16, 32
Receive buffer pointer register 43*1	RSCAN0RMPTR43	$0000\ 0000_H$	<RSCAN0_base> + $08B4_H$	8, 16, 32
Receive buffer data field 0 register 43*1	RSCAN0RMDF043	$0000\ 0000_H$	<RSCAN0_base> + $08B8_H$	8, 16, 32
Receive buffer data field 1 register 43*1	RSCAN0RMDF143	$0000\ 0000_H$	<RSCAN0_base> + $08BC_H$	8, 16, 32
Receive buffer ID register 44*1	RSCAN0RMID44	$0000\ 0000_H$	<RSCAN0_base> + $08C0_H$	8, 16, 32
Receive buffer pointer register 44*1	RSCAN0RMPTR44	$0000\ 0000_H$	<RSCAN0_base> + $08C4_H$	8, 16, 32
Receive buffer data field 0 register 44*1	RSCAN0RMDF044	$0000\ 0000_H$	<RSCAN0_base> + $08C8_H$	8, 16, 32
Receive buffer data field 1 register 44*1	RSCAN0RMDF144	$0000\ 0000_H$	<RSCAN0_base> + $08CC_H$	8, 16, 32
Receive buffer ID register 45*1	RSCAN0RMID45	$0000\ 0000_H$	<RSCAN0_base> + $08D0_H$	8, 16, 32
Receive buffer pointer register 45*1	RSCAN0RMPTR45	$0000\ 0000_H$	<RSCAN0_base> + $08D4_H$	8, 16, 32
Receive buffer data field 0 register 45*1	RSCAN0RMDF045	$0000\ 0000_H$	<RSCAN0_base> + $08D8_H$	8, 16, 32
Receive buffer data field 1 register 45*1	RSCAN0RMDF145	$0000\ 0000_H$	<RSCAN0_base> + $08DC_H$	8, 16, 32
Receive buffer ID register 46*1	RSCAN0RMID46	$0000\ 0000_H$	<RSCAN0_base> + $08E0_H$	8, 16, 32
Receive buffer pointer register 46*1	RSCAN0RMPTR46	$0000\ 0000_H$	<RSCAN0_base> + $08E4_H$	8, 16, 32
Receive buffer data field 0 register 46*1	RSCAN0RMDF046	$0000\ 0000_H$	<RSCAN0_base> + $08E8_H$	8, 16, 32
Receive buffer data field 1 register 46*1	RSCAN0RMDF146	$0000\ 0000_H$	<RSCAN0_base> + $08EC_H$	8, 16, 32
Receive buffer ID register 47*1	RSCAN0RMID47	$0000\ 0000_H$	<RSCAN0_base> + $08F0_H$	8, 16, 32
Receive buffer pointer register 47*1	RSCAN0RMPTR47	$0000\ 0000_H$	<RSCAN0_base> + $08F4_H$	8, 16, 32
Receive buffer data field 0 register 47*1	RSCAN0RMDF047	$0000\ 0000_H$	<RSCAN0_base> + $08F8_H$	8, 16, 32
Receive buffer data field 1 register 47*1	RSCAN0RMDF147	$0000\ 0000_H$	<RSCAN0_base> + $08FC_H$	8, 16, 32
Receive FIFO buffer access ID register 0	RSCAN0RFID0	$0000\ 0000_H$	<RSCAN0_base> + $0E00_H$	8, 16, 32
Receive FIFO buffer access pointer register 0	RSCAN0RFPTR0	$0000\ 0000_H$	<RSCAN0_base> + $0E04_H$	8, 16, 32
Receive FIFO buffer access data field 0 register 0	RSCAN0RFDF00	$0000\ 0000_H$	<RSCAN0_base> + $0E08_H$	8, 16, 32
Receive FIFO buffer access data field 1 register 0	RSCAN0RFDF10	$0000\ 0000_H$	<RSCAN0_base> + $0E0C_H$	8, 16, 32
Receive FIFO buffer access ID register 1	RSCAN0RFID1	$0000\ 0000_H$	<RSCAN0_base> + $0E10_H$	8, 16, 32
Receive FIFO buffer access pointer register 1	RSCAN0RFPTR1	$0000\ 0000_H$	<RSCAN0_base> + $0E14_H$	8, 16, 32
Receive FIFO buffer access data field 0 register 1	RSCAN0RFDF01	$0000\ 0000_H$	<RSCAN0_base> + $0E18_H$	8, 16, 32
Receive FIFO buffer access data field 1 register 1	RSCAN0RFDF11	$0000\ 0000_H$	<RSCAN0_base> + $0E1C_H$	8, 16, 32
Receive FIFO buffer access ID register 2	RSCAN0RFID2	$0000\ 0000_H$	<RSCAN0_base> + $0E20_H$	8, 16, 32
Receive FIFO buffer access pointer register 2	RSCAN0RFPTR2	$0000\ 0000_H$	<RSCAN0_base> + $0E24_H$	8, 16, 32
Receive FIFO buffer access data field 0 register 2	RSCAN0RFDF02	$0000\ 0000_H$	<RSCAN0_base> + $0E28_H$	8, 16, 32
Receive FIFO buffer access data field 1 register 2	RSCAN0RFDF12	$0000\ 0000_H$	<RSCAN0_base> + $0E2C_H$	8, 16, 32
Receive FIFO buffer access ID register 3	RSCAN0RFID3	$0000\ 0000_H$	<RSCAN0_base> + $0E30_H$	8, 16, 32
Receive FIFO buffer access pointer register 3	RSCAN0RFPTR3	$0000\ 0000_H$	<RSCAN0_base> + $0E34_H$	8, 16, 32
Receive FIFO buffer access data field 0 register 3	RSCAN0RFDF03	$0000\ 0000_H$	<RSCAN0_base> + $0E38_H$	8, 16, 32
Receive FIFO buffer access data field 1 register 3	RSCAN0RFDF13	$0000\ 0000_H$	<RSCAN0_base> + $0E3C_H$	8, 16, 32
Receive FIFO buffer access ID register 4	RSCAN0RFID4	$0000\ 0000_H$	<RSCAN0_base> + $0E40_H$	8, 16, 32

Table 17.12 Registers (11/17)

Register	Symbol	Value after Reset	Address	Access Size
Receive FIFO buffer access pointer register 4	RSCAN0RFPTR4	0000 0000_H	<RSCAN0_base> + $0E44_H$	8, 16, 32
Receive FIFO buffer access data field 0 register 4	RSCAN0RFDF04	0000 0000_H	<RSCAN0_base> + $0E48_H$	8, 16, 32
Receive FIFO buffer access data field 1 register 4	RSCAN0RFDF14	0000 0000_H	<RSCAN0_base> + $0E4C_H$	8, 16, 32
Receive FIFO buffer access ID register 5	RSCAN0RFID5	0000 0000_H	<RSCAN0_base> + $0E50_H$	8, 16, 32
Receive FIFO buffer access pointer register 5	RSCAN0RFPTR5	0000 0000_H	<RSCAN0_base> + $0E54_H$	8, 16, 32
Receive FIFO buffer access data field 0 register 5	RSCAN0RFDF05	0000 0000_H	<RSCAN0_base> + $0E58_H$	8, 16, 32
Receive FIFO buffer access data field 1 register 5	RSCAN0RFDF15	0000 0000_H	<RSCAN0_base> + $0E5C_H$	8, 16, 32
Receive FIFO buffer access ID register 6	RSCAN0RFID6	0000 0000_H	<RSCAN0_base> + $0E60_H$	8, 16, 32
Receive FIFO buffer access pointer register 6	RSCAN0RFPTR6	0000 0000_H	<RSCAN0_base> + $0E64_H$	8, 16, 32
Receive FIFO buffer access data field 0 register 6	RSCAN0RFDF06	0000 0000_H	<RSCAN0_base> + $0E68_H$	8, 16, 32
Receive FIFO buffer access data field 1 register 6	RSCAN0RFDF16	0000 0000_H	<RSCAN0_base> + $0E6C_H$	8, 16, 32
Receive FIFO buffer access ID register 7	RSCAN0RFID7	0000 0000_H	<RSCAN0_base> + $0E70_H$	8, 16, 32
Receive FIFO buffer access pointer register 7	RSCAN0RFPTR7	0000 0000_H	<RSCAN0_base> + $0E74_H$	8, 16, 32
Receive FIFO buffer access data field 0 register 7	RSCAN0RFDF07	0000 0000_H	<RSCAN0_base> + $0E78_H$	8, 16, 32
Receive FIFO buffer access data field 1 register 7	RSCAN0RFDF17	0000 0000_H	<RSCAN0_base> + $0E7C_H$	8, 16, 32
Transmit/receiver FIFO buffer access ID register 0	RSCAN0CFID0	0000 0000_H	<RSCAN0_base> + $0E80_H$	8, 16, 32
Transmit/receiver FIFO buffer access pointer register 0	RSCAN0CFPTR0	0000 0000_H	<RSCAN0_base> + $0E84_H$	8, 16, 32
Transmit/receiver FIFO buffer access data field 0 register 0	RSCAN0CFDF00	0000 0000_H	<RSCAN0_base> + $0E88_H$	8, 16, 32
Transmit/receive FIFO buffer access data field 1 register 0	RSCAN0CFDF10	0000 0000_H	<RSCAN0_base> + $0E8C_H$	8, 16, 32
Transmit/receiver FIFO buffer access ID register 1	RSCAN0CFID1	0000 0000_H	<RSCAN0_base> + $0E90_H$	8, 16, 32
Transmit/receiver FIFO buffer access pointer register 1	RSCAN0CFPTR1	0000 0000_H	<RSCAN0_base> + $0E94_H$	8, 16, 32
Transmit/receiver FIFO buffer access data field 0 register 1	RSCAN0CFDF01	0000 0000_H	<RSCAN0_base> + $0E98_H$	8, 16, 32
Transmit/receive FIFO buffer access data field 1 register 1	RSCAN0CFDF11	0000 0000_H	<RSCAN0_base> + $0E9C_H$	8, 16, 32
Transmit/receiver FIFO buffer access ID register 2	RSCAN0CFID2	0000 0000_H	<RSCAN0_base> + $0EA0_H$	8, 16, 32
Transmit/receiver FIFO buffer access pointer register 2	RSCAN0CFPTR2	0000 0000_H	<RSCAN0_base> + $0EA4_H$	8, 16, 32
Transmit/receiver FIFO buffer access data field 0 register 2	RSCAN0CFDF02	0000 0000_H	<RSCAN0_base> + $0EA8_H$	8, 16, 32
Transmit/receive FIFO buffer access data field 1 register 2	RSCAN0CFDF12	0000 0000_H	<RSCAN0_base> + $0EAC_H$	8, 16, 32
Transmit/receiver FIFO buffer access ID register 3	RSCAN0CFID3	0000 0000_H	<RSCAN0_base> + $0EB0_H$	8, 16, 32
Transmit/receiver FIFO buffer access pointer register 3	RSCAN0CFPTR3	0000 0000_H	<RSCAN0_base> + $0EB4_H$	8, 16, 32
Transmit/receiver FIFO buffer access data field 0 register 3	RSCAN0CFDF03	0000 0000_H	<RSCAN0_base> + $0EB8_H$	8, 16, 32
Transmit/receive FIFO buffer access data field 1 register 3	RSCAN0CFDF13	0000 0000_H	<RSCAN0_base> + $0EBC_H$	8, 16, 32
Transmit/receiver FIFO buffer access ID register 4	RSCAN0CFID4	0000 0000_H	<RSCAN0_base> + $0EC0_H$	8, 16, 32
Transmit/receiver FIFO buffer access pointer register 4	RSCAN0CFPTR4	0000 0000_H	<RSCAN0_base> + $0EC4_H$	8, 16, 32
Transmit/receiver FIFO buffer access data field 0 register 4	RSCAN0CFDF04	0000 0000_H	<RSCAN0_base> + $0EC8_H$	8, 16, 32
Transmit/receive FIFO buffer access data field 1 register 4	RSCAN0CFDF14	0000 0000_H	<RSCAN0_base> + $0ECC_H$	8, 16, 32
Transmit/receiver FIFO buffer access ID register 5	RSCAN0CFID5	0000 0000_H	<RSCAN0_base> + $0ED0_H$	8, 16, 32
Transmit/receiver FIFO buffer access pointer register 5	RSCAN0CFPTR5	0000 0000_H	<RSCAN0_base> + $0ED4_H$	8, 16, 32
Transmit/receiver FIFO buffer access data field 0 register 5	RSCAN0CFDF05	0000 0000_H	<RSCAN0_base> + $0ED8_H$	8, 16, 32
Transmit/receive FIFO buffer access data field 1 register 5	RSCAN0CFDF15	0000 0000_H	<RSCAN0_base> + $0EDC_H$	8, 16, 32
Transmit/receiver FIFO buffer access ID register 6*1	RSCAN0CFID6	0000 0000_H	<RSCAN0_base> + $0EE0_H$	8, 16, 32
Transmit/receiver FIFO buffer access pointer register 6*1	RSCAN0CFPTR6	0000 0000_H	<RSCAN0_base> + $0EE4_H$	8, 16, 32
Transmit/receiver FIFO buffer access data field 0 register 6*1	RSCAN0CFDF06	0000 0000_H	<RSCAN0_base> + $0EE8_H$	8, 16, 32
Transmit/receive FIFO buffer access data field 1 register 6*1	RSCAN0CFDF16	0000 0000_H	<RSCAN0_base> + $0EEC_H$	8, 16, 32
Transmit/receiver FIFO buffer access ID register 7*1	RSCAN0CFID7	0000 0000_H	<RSCAN0_base> + $0EF0_H$	8, 16, 32
Transmit/receiver FIFO buffer access pointer register 7*1	RSCAN0CFPTR7	0000 0000_H	<RSCAN0_base> + $0EF4_H$	8, 16, 32
Transmit/receiver FIFO buffer access data field 0 register 7*1	RSCAN0CFDF07	0000 0000_H	<RSCAN0_base> + $0EF8_H$	8, 16, 32
Transmit/receive FIFO buffer access data field 1 register 7*1	RSCAN0CFDF17	0000 0000_H	<RSCAN0_base> + $0EFC_H$	8, 16, 32
Transmit/receiver FIFO buffer access ID register 8*1	RSCAN0CFID8	0000 0000_H	<RSCAN0_base> + $0F00_H$	8, 16, 32
Transmit/receiver FIFO buffer access pointer register 8*1	RSCAN0CFPTR8	0000 0000_H	<RSCAN0_base> + $0F04_H$	8, 16, 32

Table 17.12 Registers (12/17)

Register	Symbol	Value after Reset	Address	Access Size
Transmit/receiver FIFO buffer access data field 0 register 8*[1]	RSCAN0CFDF08	0000 0000_H	<RSCAN0_base> + $0F08_H$	8, 16, 32
Transmit/receive FIFO buffer access data field 1 register 8*[1]	RSCAN0CFDF18	0000 0000_H	<RSCAN0_base> + $0F0C_H$	8, 16, 32
Transmit buffer ID register 0	RSCAN0TMID0	0000 0000_H	<RSCAN0_base> + 1000_H	8, 16, 32
Transmit buffer pointer register 0	RSCAN0TMPTR0	0000 0000_H	<RSCAN0_base> + 1004_H	8, 16, 32
Transmit buffer data field 0 register 0	RSCAN0TMDF00	0000 0000_H	<RSCAN0_base> + 1008_H	8, 16, 32
Transmit buffer data field 1 register 0	RSCAN0TMDF10	0000 0000_H	<RSCAN0_base> + $100C_H$	8, 16, 32
Transmit buffer ID register 1	RSCAN0TMID1	0000 0000_H	<RSCAN0_base> + 1010_H	8, 16, 32
Transmit buffer pointer register 1	RSCAN0TMPTR1	0000 0000_H	<RSCAN0_base> + 1014_H	8, 16, 32
Transmit buffer data field 0 register 1	RSCAN0TMDF01	0000 0000_H	<RSCAN0_base> + 1018_H	8, 16, 32
Transmit buffer data field 1 register 1	RSCAN0TMDF11	0000 0000_H	<RSCAN0_base> + $101C_H$	8, 16, 32
Transmit buffer ID register 2	RSCAN0TMID2	0000 0000_H	<RSCAN0_base> + 1020_H	8, 16, 32
Transmit buffer pointer register 2	RSCAN0TMPTR2	0000 0000_H	<RSCAN0_base> + 1024_H	8, 16, 32
Transmit buffer data field 0 register 2	RSCAN0TMDF02	0000 0000_H	<RSCAN0_base> + 1028_H	8, 16, 32
Transmit buffer data field 1 register 2	RSCAN0TMDF12	0000 0000_H	<RSCAN0_base> + $102C_H$	8, 16, 32
Transmit buffer ID register 3	RSCAN0TMID3	0000 0000_H	<RSCAN0_base> + 1030_H	8, 16, 32
Transmit buffer pointer register 3	RSCAN0TMPTR3	0000 0000_H	<RSCAN0_base> + 1034_H	8, 16, 32
Transmit buffer data field 0 register 3	RSCAN0TMDF03	0000 0000_H	<RSCAN0_base> + 1038_H	8, 16, 32
Transmit buffer data field 1 register 3	RSCAN0TMDF13	0000 0000_H	<RSCAN0_base> + $103C_H$	8, 16, 32
Transmit buffer ID register 4	RSCAN0TMID4	0000 0000_H	<RSCAN0_base> + 1040_H	8, 16, 32
Transmit buffer pointer register 4	RSCAN0TMPTR4	0000 0000_H	<RSCAN0_base> + 1044_H	8, 16, 32
Transmit buffer data field 0 register 4	RSCAN0TMDF04	0000 0000_H	<RSCAN0_base> + 1048_H	8, 16, 32
Transmit buffer data field 1 register 4	RSCAN0TMDF14	0000 0000_H	<RSCAN0_base> + $104C_H$	8, 16, 32
Transmit buffer ID register 5	RSCAN0TMID5	0000 0000_H	<RSCAN0_base> + 1050_H	8, 16, 32
Transmit buffer pointer register 5	RSCAN0TMPTR5	0000 0000_H	<RSCAN0_base> + 1054_H	8, 16, 32
Transmit buffer data field 0 register 5	RSCAN0TMDF05	0000 0000_H	<RSCAN0_base> + 1058_H	8, 16, 32
Transmit buffer data field 1 register 5	RSCAN0TMDF15	0000 0000_H	<RSCAN0_base> + $105C_H$	8, 16, 32
Transmit buffer ID register 6	RSCAN0TMID6	0000 0000_H	<RSCAN0_base> + 1060_H	8, 16, 32
Transmit buffer pointer register 6	RSCAN0TMPTR6	0000 0000_H	<RSCAN0_base> + 1064_H	8, 16, 32
Transmit buffer data field 0 register 6	RSCAN0TMDF06	0000 0000_H	<RSCAN0_base> + 1068_H	8, 16, 32
Transmit buffer data field 1 register 6	RSCAN0TMDF16	0000 0000_H	<RSCAN0_base> + $106C_H$	8, 16, 32
Transmit buffer ID register 7	RSCAN0TMID7	0000 0000_H	<RSCAN0_base> + 1070_H	8, 16, 32
Transmit buffer pointer register 7	RSCAN0TMPTR7	0000 0000_H	<RSCAN0_base> + 1074_H	8, 16, 32
Transmit buffer data field 0 register 7	RSCAN0TMDF07	0000 0000_H	<RSCAN0_base> + 1078_H	8, 16, 32
Transmit buffer data field 1 register 7	RSCAN0TMDF17	0000 0000_H	<RSCAN0_base> + $107C_H$	8, 16, 32
Transmit buffer ID register 8	RSCAN0TMID8	0000 0000_H	<RSCAN0_base> + 1080_H	8, 16, 32
Transmit buffer pointer register 8	RSCAN0TMPTR8	0000 0000_H	<RSCAN0_base> + 1084_H	8, 16, 32
Transmit buffer data field 0 register 8	RSCAN0TMDF08	0000 0000_H	<RSCAN0_base> + 1088_H	8, 16, 32
Transmit buffer data field 1 register 8	RSCAN0TMDF18	0000 0000_H	<RSCAN0_base> + $108C_H$	8, 16, 32
Transmit buffer ID register 9	RSCAN0TMID9	0000 0000_H	<RSCAN0_base> + 1090_H	8, 16, 32
Transmit buffer pointer register 9	RSCAN0TMPTR9	0000 0000_H	<RSCAN0_base> + 1094_H	8, 16, 32
Transmit buffer data field 0 register 9	RSCAN0TMDF09	0000 0000_H	<RSCAN0_base> + 1098_H	8, 16, 32
Transmit buffer data field 1 register 9	RSCAN0TMDF19	0000 0000_H	<RSCAN0_base> + $109C_H$	8, 16, 32
Transmit buffer ID register 10	RSCAN0TMID10	0000 0000_H	<RSCAN0_base> + $10A0_H$	8, 16, 32
Transmit buffer pointer register 10	RSCAN0TMPTR10	0000 0000_H	<RSCAN0_base> + $10A4_H$	8, 16, 32
Transmit buffer data field 0 register 10	RSCAN0TMDF010	0000 0000_H	<RSCAN0_base> + $10A8_H$	8, 16, 32
Transmit buffer data field 1 register 10	RSCAN0TMDF110	0000 0000_H	<RSCAN0_base> + $10AC_H$	8, 16, 32
Transmit buffer ID register 11	RSCAN0TMID11	0000 0000_H	<RSCAN0_base> + $10B0_H$	8, 16, 32
Transmit buffer pointer register 11	RSCAN0TMPTR11	0000 0000_H	<RSCAN0_base> + $10B4_H$	8, 16, 32
Transmit buffer data field 0 register 11	RSCAN0TMDF011	0000 0000_H	<RSCAN0_base> + $10B8_H$	8, 16, 32

Table 17.12 Registers (13/17)

Register	Symbol	Value after Reset	Address	Access Size
Transmit buffer data field 1 register 11	RSCAN0TMDF111	$0000\ 0000_H$	<RSCAN0_base> + $10BC_H$	8, 16, 32
Transmit buffer ID register 12	RSCAN0TMID12	$0000\ 0000_H$	<RSCAN0_base> + $10C0_H$	8, 16, 32
Transmit buffer pointer register 12	RSCAN0TMPTR12	$0000\ 0000_H$	<RSCAN0_base> + $10C4_H$	8, 16, 32
Transmit buffer data field 0 register 12	RSCAN0TMDF012	$0000\ 0000_H$	<RSCAN0_base> + $10C8_H$	8, 16, 32
Transmit buffer data field 1 register 12	RSCAN0TMDF112	$0000\ 0000_H$	<RSCAN0_base> + $10CC_H$	8, 16, 32
Transmit buffer ID register 13	RSCAN0TMID13	$0000\ 0000_H$	<RSCAN0_base> + $10D0_H$	8, 16, 32
Transmit buffer pointer register 13	RSCAN0TMPTR13	$0000\ 0000_H$	<RSCAN0_base> + $10D4_H$	8, 16, 32
Transmit buffer data field 0 register 13	RSCAN0TMDF013	$0000\ 0000_H$	<RSCAN0_base> + $10D8_H$	8, 16, 32
Transmit buffer data field 1 register 13	RSCAN0TMDF113	$0000\ 0000_H$	<RSCAN0_base> + $10DC_H$	8, 16, 32
Transmit buffer ID register 14	RSCAN0TMID14	$0000\ 0000_H$	<RSCAN0_base> + $10E0_H$	8, 16, 32
Transmit buffer pointer register 14	RSCAN0TMPTR14	$0000\ 0000_H$	<RSCAN0_base> + $10E4_H$	8, 16, 32
Transmit buffer data field 0 register 14	RSCAN0TMDF014	$0000\ 0000_H$	<RSCAN0_base> + $10E8_H$	8, 16, 32
Transmit buffer data field 1 register 14	RSCAN0TMDF114	$0000\ 0000_H$	<RSCAN0_base> + $10EC_H$	8, 16, 32
Transmit buffer ID register 15	RSCAN0TMID15	$0000\ 0000_H$	<RSCAN0_base> + $10F0_H$	8, 16, 32
Transmit buffer pointer register 15	RSCAN0TMPTR15	$0000\ 0000_H$	<RSCAN0_base> + $10F4_H$	8, 16, 32
Transmit buffer data field 0 register 15	RSCAN0TMDF015	$0000\ 0000_H$	<RSCAN0_base> + $10F8_H$	8, 16, 32
Transmit buffer data field 1 register 15	RSCAN0TMDF115	$0000\ 0000_H$	<RSCAN0_base> + $10FC_H$	8, 16, 32
Transmit buffer ID register 16	RSCAN0TMID16	$0000\ 0000_H$	<RSCAN0_base> + 1100_H	8, 16, 32
Transmit buffer pointer register 16	RSCAN0TMPTR16	$0000\ 0000_H$	<RSCAN0_base> + 1104_H	8, 16, 32
Transmit buffer data field 0 register 16	RSCAN0TMDF016	$0000\ 0000_H$	<RSCAN0_base> + 1108_H	8, 16, 32
Transmit buffer data field 1 register 16	RSCAN0TMDF116	$0000\ 0000_H$	<RSCAN0_base> + $110C_H$	8, 16, 32
Transmit buffer ID register 17	RSCAN0TMID17	$0000\ 0000_H$	<RSCAN0_base> + 1110_H	8, 16, 32
Transmit buffer pointer register 17	RSCAN0TMPTR17	$0000\ 0000_H$	<RSCAN0_base> + 1114_H	8, 16, 32
Transmit buffer data field 0 register 17	RSCAN0TMDF017	$0000\ 0000_H$	<RSCAN0_base> + 1118_H	8, 16, 32
Transmit buffer data field 1 register 17	RSCAN0TMDF117	$0000\ 0000_H$	<RSCAN0_base> + $111C_H$	8, 16, 32
Transmit buffer ID register 18	RSCAN0TMID18	$0000\ 0000_H$	<RSCAN0_base> + 1120_H	8, 16, 32
Transmit buffer pointer register 18	RSCAN0TMPTR18	$0000\ 0000_H$	<RSCAN0_base> + 1124_H	8, 16, 32
Transmit buffer data field 0 register 18	RSCAN0TMDF018	$0000\ 0000_H$	<RSCAN0_base> + 1128_H	8, 16, 32
Transmit buffer data field 1 register 18	RSCAN0TMDF118	$0000\ 0000_H$	<RSCAN0_base> + $112C_H$	8, 16, 32
Transmit buffer ID register 19	RSCAN0TMID19	$0000\ 0000_H$	<RSCAN0_base> + 1130_H	8, 16, 32
Transmit buffer pointer register 19	RSCAN0TMPTR19	$0000\ 0000_H$	<RSCAN0_base> + 1134_H	8, 16, 32
Transmit buffer data field 0 register 19	RSCAN0TMDF019	$0000\ 0000_H$	<RSCAN0_base> + 1138_H	8, 16, 32
Transmit buffer data field 1 register 19	RSCAN0TMDF119	$0000\ 0000_H$	<RSCAN0_base> + $113C_H$	8, 16, 32
Transmit buffer ID register 20	RSCAN0TMID20	$0000\ 0000_H$	<RSCAN0_base> + 1140_H	8, 16, 32
Transmit buffer pointer register 20	RSCAN0TMPTR20	$0000\ 0000_H$	<RSCAN0_base> + 1144_H	8, 16, 32
Transmit buffer data field 0 register 20	RSCAN0TMDF020	$0000\ 0000_H$	<RSCAN0_base> + 1148_H	8, 16, 32
Transmit buffer data field 1 register 20	RSCAN0TMDF120	$0000\ 0000_H$	<RSCAN0_base> + $114C_H$	8, 16, 32
Transmit buffer ID register 21	RSCAN0TMID21	$0000\ 0000_H$	<RSCAN0_base> + 1150_H	8, 16, 32
Transmit buffer pointer register 21	RSCAN0TMPTR21	$0000\ 0000_H$	<RSCAN0_base> + 1154_H	8, 16, 32
Transmit buffer data field 0 register 21	RSCAN0TMDF021	$0000\ 0000_H$	<RSCAN0_base> + 1158_H	8, 16, 32
Transmit buffer data field 1 register 21	RSCAN0TMDF121	$0000\ 0000_H$	<RSCAN0_base> + $115C_H$	8, 16, 32
Transmit buffer ID register 22	RSCAN0TMID22	$0000\ 0000_H$	<RSCAN0_base> + 1160_H	8, 16, 32
Transmit buffer pointer register 22	RSCAN0TMPTR22	$0000\ 0000_H$	<RSCAN0_base> + 1164_H	8, 16, 32
Transmit buffer data field 0 register 22	RSCAN0TMDF022	$0000\ 0000_H$	<RSCAN0_base> + 1168_H	8, 16, 32
Transmit buffer data field 1 register 22	RSCAN0TMDF122	$0000\ 0000_H$	<RSCAN0_base> + $116C_H$	8, 16, 32
Transmit buffer ID register 23	RSCAN0TMID23	$0000\ 0000_H$	<RSCAN0_base> + 1170_H	8, 16, 32
Transmit buffer pointer register 23	RSCAN0TMPTR23	$0000\ 0000_H$	<RSCAN0_base> + 1174_H	8, 16, 32
Transmit buffer data field 0 register 23	RSCAN0TMDF023	$0000\ 0000_H$	<RSCAN0_base> + 1178_H	8, 16, 32
Transmit buffer data field 1 register 23	RSCAN0TMDF123	$0000\ 0000_H$	<RSCAN0_base> + $117C_H$	8, 16, 32

Table 17.12 Registers (14/17)

Register	Symbol	Value after Reset	Address	Access Size
Transmit buffer ID register 24	RSCAN0TMID24	$0000\ 0000_H$	<RSCAN0_base> + 1180_H	8, 16, 32
Transmit buffer pointer register 24	RSCAN0TMPTR24	$0000\ 0000_H$	<RSCAN0_base> + 1184_H	8, 16, 32
Transmit buffer data field 0 register 24	RSCAN0TMDF024	$0000\ 0000_H$	<RSCAN0_base> + 1188_H	8, 16, 32
Transmit buffer data field 1 register 24	RSCAN0TMDF124	$0000\ 0000_H$	<RSCAN0_base> + $118C_H$	8, 16, 32
Transmit buffer ID register 25	RSCAN0TMID25	$0000\ 0000_H$	<RSCAN0_base> + 1190_H	8, 16, 32
Transmit buffer pointer register 25	RSCAN0TMPTR25	$0000\ 0000_H$	<RSCAN0_base> + 1194_H	8, 16, 32
Transmit buffer data field 0 register 25	RSCAN0TMDF025	$0000\ 0000_H$	<RSCAN0_base> + 1198_H	8, 16, 32
Transmit buffer data field 1 register 25	RSCAN0TMDF125	$0000\ 0000_H$	<RSCAN0_base> + $119C_H$	8, 16, 32
Transmit buffer ID register 26	RSCAN0TMID26	$0000\ 0000_H$	<RSCAN0_base> + $11A0_H$	8, 16, 32
Transmit buffer pointer register 26	RSCAN0TMPTR26	$0000\ 0000_H$	<RSCAN0_base> + $11A4_H$	8, 16, 32
Transmit buffer data field 0 register 26	RSCAN0TMDF026	$0000\ 0000_H$	<RSCAN0_base> + $11A8_H$	8, 16, 32
Transmit buffer data field 1 register 26	RSCAN0TMDF126	$0000\ 0000_H$	<RSCAN0_base> + $11AC_H$	8, 16, 32
Transmit buffer ID register 27	RSCAN0TMID27	$0000\ 0000_H$	<RSCAN0_base> + $11B0_H$	8, 16, 32
Transmit buffer pointer register 27	RSCAN0TMPTR27	$0000\ 0000_H$	<RSCAN0_base> + $11B4_H$	8, 16, 32
Transmit buffer data field 0 register 27	RSCAN0TMDF027	$0000\ 0000_H$	<RSCAN0_base> + $11B8_H$	8, 16, 32
Transmit buffer data field 1 register 27	RSCAN0TMDF127	$0000\ 0000_H$	<RSCAN0_base> + $11BC_H$	8, 16, 32
Transmit buffer ID register 28	RSCAN0TMID28	$0000\ 0000_H$	<RSCAN0_base> + $11C0_H$	8, 16, 32
Transmit buffer pointer register 28	RSCAN0TMPTR28	$0000\ 0000_H$	<RSCAN0_base> + $11C4_H$	8, 16, 32
Transmit buffer data field 0 register 28	RSCAN0TMDF028	$0000\ 0000_H$	<RSCAN0_base> + $11C8_H$	8, 16, 32
Transmit buffer data field 1 register 28	RSCAN0TMDF128	$0000\ 0000_H$	<RSCAN0_base> + $11CC_H$	8, 16, 32
Transmit buffer ID register 29	RSCAN0TMID29	$0000\ 0000_H$	<RSCAN0_base> + $11D0_H$	8, 16, 32
Transmit buffer pointer register 29	RSCAN0TMPTR29	$0000\ 0000_H$	<RSCAN0_base> + $11D4_H$	8, 16, 32
Transmit buffer data field 0 register 29	RSCAN0TMDF029	$0000\ 0000_H$	<RSCAN0_base> + $11D8_H$	8, 16, 32
Transmit buffer data field 1 register 29	RSCAN0TMDF129	$0000\ 0000_H$	<RSCAN0_base> + $11DC_H$	8, 16, 32
Transmit buffer ID register 30	RSCAN0TMID30	$0000\ 0000_H$	<RSCAN0_base> + $11E0_H$	8, 16, 32
Transmit buffer pointer register 30	RSCAN0TMPTR30	$0000\ 0000_H$	<RSCAN0_base> + $11E4_H$	8, 16, 32
Transmit buffer data field 0 register 30	RSCAN0TMDF030	$0000\ 0000_H$	<RSCAN0_base> + $11E8_H$	8, 16, 32
Transmit buffer data field 1 register 30	RSCAN0TMDF130	$0000\ 0000_H$	<RSCAN0_base> + $11EC_H$	8, 16, 32
Transmit buffer ID register 31	RSCAN0TMID31	$0000\ 0000_H$	<RSCAN0_base> + $11F0_H$	8, 16, 32
Transmit buffer pointer register 31	RSCAN0TMPTR31	$0000\ 0000_H$	<RSCAN0_base> + $11F4_H$	8, 16, 32
Transmit buffer data field 0 register 31	RSCAN0TMDF031	$0000\ 0000_H$	<RSCAN0_base> + $11F8_H$	8, 16, 32
Transmit buffer data field 1 register 31	RSCAN0TMDF131	$0000\ 0000_H$	<RSCAN0_base> + $11FC_H$	8, 16, 32
Transmit buffer ID register 32*1	RSCAN0TMID32	$0000\ 0000_H$	<RSCAN0_base> + 1200_H	8, 16, 32
Transmit buffer pointer register 32*1	RSCAN0TMPTR32	$0000\ 0000_H$	<RSCAN0_base> + 1204_H	8, 16, 32
Transmit buffer data field 0 register 32*1	RSCAN0TMDF032	$0000\ 0000_H$	<RSCAN0_base> + 1208_H	8, 16, 32
Transmit buffer data field 1 register 32*1	RSCAN0TMDF132	$0000\ 0000_H$	<RSCAN0_base> + $120C_H$	8, 16, 32
Transmit buffer ID register 33*1	RSCAN0TMID33	$0000\ 0000_H$	<RSCAN0_base> + 1210_H	8, 16, 32
Transmit buffer pointer register 33*1	RSCAN0TMPTR33	$0000\ 0000_H$	<RSCAN0_base> + 1214_H	8, 16, 32
Transmit buffer data field 0 register 33*1	RSCAN0TMDF033	$0000\ 0000_H$	<RSCAN0_base> + 1218_H	8, 16, 32
Transmit buffer data field 1 register 33*1	RSCAN0TMDF133	$0000\ 0000_H$	<RSCAN0_base> + $121C_H$	8, 16, 32
Transmit buffer ID register 34*1	RSCAN0TMID34	$0000\ 0000_H$	<RSCAN0_base> + 1220_H	8, 16, 32
Transmit buffer pointer register 34*1	RSCAN0TMPTR34	$0000\ 0000_H$	<RSCAN0_base> + 1224_H	8, 16, 32
Transmit buffer data field 0 register 34*1	RSCAN0TMDF034	$0000\ 0000_H$	<RSCAN0_base> + 1228_H	8, 16, 32
Transmit buffer data field 1 register 34*1	RSCAN0TMDF134	$0000\ 0000_H$	<RSCAN0_base> + $122C_H$	8, 16, 32
Transmit buffer ID register 35*1	RSCAN0TMID35	$0000\ 0000_H$	<RSCAN0_base> + 1230_H	8, 16, 32
Transmit buffer pointer register 35*1	RSCAN0TMPTR35	$0000\ 0000_H$	<RSCAN0_base> + 1234_H	8, 16, 32
Transmit buffer data field 0 register 35*1	RSCAN0TMDF035	$0000\ 0000_H$	<RSCAN0_base> + 1238_H	8, 16, 32
Transmit buffer data field 1 register 35*1	RSCAN0TMDF135	$0000\ 0000_H$	<RSCAN0_base> + $123C_H$	8, 16, 32
Transmit buffer ID register 36*1	RSCAN0TMID36	$0000\ 0000_H$	<RSCAN0_base> + 1240_H	8, 16, 32

Table 17.12 Registers (15/17)

Register	Symbol	Value after Reset	Address	Access Size
Transmit buffer pointer register 36*1	RSCAN0TMPTR36	0000 0000_H	<RSCAN0_base> + 1244_H	8, 16, 32
Transmit buffer data field 0 register 36*1	RSCAN0TMDF036	0000 0000_H	<RSCAN0_base> + 1248_H	8, 16, 32
Transmit buffer data field 1 register 36*1	RSCAN0TMDF136	0000 0000_H	<RSCAN0_base> + $124C_H$	8, 16, 32
Transmit buffer ID register 37*1	RSCAN0TMID37	0000 0000_H	<RSCAN0_base> + 1250_H	8, 16, 32
Transmit buffer pointer register 37*1	RSCAN0TMPTR37	0000 0000_H	<RSCAN0_base> + 1254_H	8, 16, 32
Transmit buffer data field 0 register 37*1	RSCAN0TMDF037	0000 0000_H	<RSCAN0_base> + 1258_H	8, 16, 32
Transmit buffer data field 1 register 37*1	RSCAN0TMDF137	0000 0000_H	<RSCAN0_base> + $125C_H$	8, 16, 32
Transmit buffer ID register 38*1	RSCAN0TMID38	0000 0000_H	<RSCAN0_base> + 1260_H	8, 16, 32
Transmit buffer pointer register 38*1	RSCAN0TMPTR38	0000 0000_H	<RSCAN0_base> + 1264_H	8, 16, 32
Transmit buffer data field 0 register 38*1	RSCAN0TMDF038	0000 0000_H	<RSCAN0_base> + 1268_H	8, 16, 32
Transmit buffer data field 1 register 38*1	RSCAN0TMDF138	0000 0000_H	<RSCAN0_base> + $126C_H$	8, 16, 32
Transmit buffer ID register 39*1	RSCAN0TMID39	0000 0000_H	<RSCAN0_base> + 1270_H	8, 16, 32
Transmit buffer pointer register 39*1	RSCAN0TMPTR39	0000 0000_H	<RSCAN0_base> + 1274_H	8, 16, 32
Transmit buffer data field 0 register 39*1	RSCAN0TMDF039	0000 0000_H	<RSCAN0_base> + 1278_H	8, 16, 32
Transmit buffer data field 1 register 39*1	RSCAN0TMDF139	0000 0000_H	<RSCAN0_base> + $127C_H$	8, 16, 32
Transmit buffer ID register 40*1	RSCAN0TMID40	0000 0000_H	<RSCAN0_base> + 1280_H	8, 16, 32
Transmit buffer pointer register 40*1	RSCAN0TMPTR40	0000 0000_H	<RSCAN0_base> + 1284_H	8, 16, 32
Transmit buffer data field 0 register 40*1	RSCAN0TMDF040	0000 0000_H	<RSCAN0_base> + 1288_H	8, 16, 32
Transmit buffer data field 1 register 40*1	RSCAN0TMDF140	0000 0000_H	<RSCAN0_base> + $128C_H$	8, 16, 32
Transmit buffer ID register 41*1	RSCAN0TMID41	0000 0000_H	<RSCAN0_base> + 1290_H	8, 16, 32
Transmit buffer pointer register 41*1	RSCAN0TMPTR41	0000 0000_H	<RSCAN0_base> + 1294_H	8, 16, 32
Transmit buffer data field 0 register 41*1	RSCAN0TMDF041	0000 0000_H	<RSCAN0_base> + 1298_H	8, 16, 32
Transmit buffer data field 1 register 41*1	RSCAN0TMDF141	0000 0000_H	<RSCAN0_base> + $129C_H$	8, 16, 32
Transmit buffer ID register 42*1	RSCAN0TMID42	0000 0000_H	<RSCAN0_base> + $12A0_H$	8, 16, 32
Transmit buffer pointer register 42*1	RSCAN0TMPTR42	0000 0000_H	<RSCAN0_base> + $12A4_H$	8, 16, 32
Transmit buffer data field 0 register 42*1	RSCAN0TMDF042	0000 0000_H	<RSCAN0_base> + $12A8_H$	8, 16, 32
Transmit buffer data field 1 register 42*1	RSCAN0TMDF142	0000 0000_H	<RSCAN0_base> + $12AC_H$	8, 16, 32
Transmit buffer ID register 43*1	RSCAN0TMID43	0000 0000_H	<RSCAN0_base> + $12B0_H$	8, 16, 32
Transmit buffer pointer register 43*1	RSCAN0TMPTR43	0000 0000_H	<RSCAN0_base> + $12B4_H$	8, 16, 32
Transmit buffer data field 0 register 43*1	RSCAN0TMDF043	0000 0000_H	<RSCAN0_base> + $12B8_H$	8, 16, 32
Transmit buffer data field 1 register 43*1	RSCAN0TMDF143	0000 0000_H	<RSCAN0_base> + $12BC_H$	8, 16, 32
Transmit buffer ID register 44*1	RSCAN0TMID44	0000 0000_H	<RSCAN0_base> + $12C0_H$	8, 16, 32
Transmit buffer pointer register 44*1	RSCAN0TMPTR44	0000 0000_H	<RSCAN0_base> + $12C4_H$	8, 16, 32
Transmit buffer data field 0 register 44*1	RSCAN0TMDF044	0000 0000_H	<RSCAN0_base> + $12C8_H$	8, 16, 32
Transmit buffer data field 1 register 44*1	RSCAN0TMDF144	0000 0000_H	<RSCAN0_base> + $12CC_H$	8, 16, 32
Transmit buffer ID register 45*1	RSCAN0TMID45	0000 0000_H	<RSCAN0_base> + $12D0_H$	8, 16, 32
Transmit buffer pointer register 45*1	RSCAN0TMPTR45	0000 0000_H	<RSCAN0_base> + $12D4_H$	8, 16, 32
Transmit buffer data field 0 register 45*1	RSCAN0TMDF045	0000 0000_H	<RSCAN0_base> + $12D8_H$	8, 16, 32
Transmit buffer data field 1 register 45*1	RSCAN0TMDF145	0000 0000_H	<RSCAN0_base> + $12DC_H$	8, 16, 32
Transmit buffer ID register 46*1	RSCAN0TMID46	0000 0000_H	<RSCAN0_base> + $12E0_H$	8, 16, 32
Transmit buffer pointer register 46*1	RSCAN0TMPTR46	0000 0000_H	<RSCAN0_base> + $12E4_H$	8, 16, 32
Transmit buffer data field 0 register 46*1	RSCAN0TMDF046	0000 0000_H	<RSCAN0_base> + $12E8_H$	8, 16, 32
Transmit buffer data field 1 register 46*1	RSCAN0TMDF146	0000 0000_H	<RSCAN0_base> + $12EC_H$	8, 16, 32
Transmit buffer ID register 47*1	RSCAN0TMID47	0000 0000_H	<RSCAN0_base> + $12F0_H$	8, 16, 32
Transmit buffer pointer register 47*1	RSCAN0TMPTR47	0000 0000_H	<RSCAN0_base> + $12F4_H$	8, 16, 32
Transmit buffer data field 0 register 47*1	RSCAN0TMDF047	0000 0000_H	<RSCAN0_base> + $12F8_H$	8, 16, 32
Transmit buffer data field 1 register 47*1	RSCAN0TMDF147	0000 0000_H	<RSCAN0_base> + $12FC_H$	8, 16, 32
Transmit history access register 0	RSCAN0THLACC0	0000 0000_H	<RSCAN0_base> + 1800_H	8, 16, 32
Transmit history access register 1	RSCAN0THLACC1	0000 0000_H	<RSCAN0_base> + 1804_H	8, 16, 32

Table 17.12 Registers (16/17)

Register	Symbol	Value after Reset	Address	Access Size
Transmit history access register 2*[1]	RSCAN0THLACC2	0000 0000_H	<RSCAN0_base> + 1808_H	8, 16, 32
RAM test page access register 0	RSCAN0RPGACC0	0000 0000_H	<RSCAN0_base> + 1900_H	8, 16, 32
RAM test page access register 1	RSCAN0RPGACC1	0000 0000_H	<RSCAN0_base> + 1904_H	8, 16, 32
RAM test page access register 2	RSCAN0RPGACC2	0000 0000_H	<RSCAN0_base> + 1908_H	8, 16, 32
RAM test page access register 3	RSCAN0RPGACC3	0000 0000_H	<RSCAN0_base> + $190C_H$	8, 16, 32
RAM test page access register 4	RSCAN0RPGACC4	0000 0000_H	<RSCAN0_base> + 1910_H	8, 16, 32
RAM test page access register 5	RSCAN0RPGACC5	0000 0000_H	<RSCAN0_base> + 1914_H	8, 16, 32
RAM test page access register 6	RSCAN0RPGACC6	0000 0000_H	<RSCAN0_base> + 1918_H	8, 16, 32
RAM test page access register 7	RSCAN0RPGACC7	0000 0000_H	<RSCAN0_base> + $191C_H$	8, 16, 32
RAM test page access register 8	RSCAN0RPGACC8	0000 0000_H	<RSCAN0_base> + 1920_H	8, 16, 32
RAM test page access register 9	RSCAN0RPGACC9	0000 0000_H	<RSCAN0_base> + 1924_H	8, 16, 32
RAM test page access register 10	RSCAN0RPGACC10	0000 0000_H	<RSCAN0_base> + 1928_H	8, 16, 32
RAM test page access register 11	RSCAN0RPGACC11	0000 0000_H	<RSCAN0_base> + $192C_H$	8, 16, 32
RAM test page access register 12	RSCAN0RPGACC12	0000 0000_H	<RSCAN0_base> + 1930_H	8, 16, 32
RAM test page access register 13	RSCAN0RPGACC13	0000 0000_H	<RSCAN0_base> + 1934_H	8, 16, 32
RAM test page access register 14	RSCAN0RPGACC14	0000 0000_H	<RSCAN0_base> + 1938_H	8, 16, 32
RAM test page access register 15	RSCAN0RPGACC15	0000 0000_H	<RSCAN0_base> + $193C_H$	8, 16, 32
RAM test page access register 16	RSCAN0RPGACC16	0000 0000_H	<RSCAN0_base> + 1940_H	8, 16, 32
RAM test page access register 17	RSCAN0RPGACC17	0000 0000_H	<RSCAN0_base> + 1944_H	8, 16, 32
RAM test page access register 18	RSCAN0RPGACC18	0000 0000_H	<RSCAN0_base> + 1948_H	8, 16, 32
RAM test page access register 19	RSCAN0RPGACC19	0000 0000_H	<RSCAN0_base> + $194C_H$	8, 16, 32
RAM test page access register 20	RSCAN0RPGACC20	0000 0000_H	<RSCAN0_base> + 1950_H	8, 16, 32
RAM test page access register 21	RSCAN0RPGACC21	0000 0000_H	<RSCAN0_base> + 1954_H	8, 16, 32
RAM test page access register 22	RSCAN0RPGACC22	0000 0000_H	<RSCAN0_base> + 1958_H	8, 16, 32
RAM test page access register 23	RSCAN0RPGACC23	0000 0000_H	<RSCAN0_base> + $195C_H$	8, 16, 32
RAM test page access register 24	RSCAN0RPGACC24	0000 0000_H	<RSCAN0_base> + 1960_H	8, 16, 32
RAM test page access register 25	RSCAN0RPGACC25	0000 0000_H	<RSCAN0_base> + 1964_H	8, 16, 32
RAM test page access register 26	RSCAN0RPGACC26	0000 0000_H	<RSCAN0_base> + 1968_H	8, 16, 32
RAM test page access register 27	RSCAN0RPGACC27	0000 0000_H	<RSCAN0_base> + $196C_H$	8, 16, 32
RAM test page access register 28	RSCAN0RPGACC28	0000 0000_H	<RSCAN0_base> + 1970_H	8, 16, 32
RAM test page access register 29	RSCAN0RPGACC29	0000 0000_H	<RSCAN0_base> + 1974_H	8, 16, 32
RAM test page access register 30	RSCAN0RPGACC30	0000 0000_H	<RSCAN0_base> + 1978_H	8, 16, 32
RAM test page access register 31	RSCAN0RPGACC31	0000 0000_H	<RSCAN0_base> + $197C_H$	8, 16, 32
RAM test page access register 32	RSCAN0RPGACC32	0000 0000_H	<RSCAN0_base> + 1980_H	8, 16, 32
RAM test page access register 33	RSCAN0RPGACC33	0000 0000_H	<RSCAN0_base> + 1984_H	8, 16, 32
RAM test page access register 34	RSCAN0RPGACC34	0000 0000_H	<RSCAN0_base> + 1988_H	8, 16, 32
RAM test page access register 35	RSCAN0RPGACC35	0000 0000_H	<RSCAN0_base> + $198C_H$	8, 16, 32
RAM test page access register 36	RSCAN0RPGACC36	0000 0000_H	<RSCAN0_base> + 1990_H	8, 16, 32
RAM test page access register 37	RSCAN0RPGACC37	0000 0000_H	<RSCAN0_base> + 1994_H	8, 16, 32
RAM test page access register 38	RSCAN0RPGACC38	0000 0000_H	<RSCAN0_base> + 1998_H	8, 16, 32
RAM test page access register 39	RSCAN0RPGACC39	0000 0000_H	<RSCAN0_base> + $199C_H$	8, 16, 32
RAM test page access register 40	RSCAN0RPGACC40	0000 0000_H	<RSCAN0_base> + $19A0_H$	8, 16, 32
RAM test page access register 41	RSCAN0RPGACC41	0000 0000_H	<RSCAN0_base> + $19A4_H$	8, 16, 32
RAM test page access register 42	RSCAN0RPGACC42	0000 0000_H	<RSCAN0_base> + $19A8_H$	8, 16, 32
RAM test page access register 43	RSCAN0RPGACC43	0000 0000_H	<RSCAN0_base> + $19AC_H$	8, 16, 32
RAM test page access register 44	RSCAN0RPGACC44	0000 0000_H	<RSCAN0_base> + $19B0_H$	8, 16, 32
RAM test page access register 45	RSCAN0RPGACC45	0000 0000_H	<RSCAN0_base> + $19B4_H$	8, 16, 32
RAM test page access register 46	RSCAN0RPGACC46	0000 0000_H	<RSCAN0_base> + $19B8_H$	8, 16, 32
RAM test page access register 47	RSCAN0RPGACC47	0000 0000_H	<RSCAN0_base> + $19BC_H$	8, 16, 32

Table 17.12 Registers (17/17)

Register	Symbol	Value after Reset	Address	Access Size
RAM test page access register 48	RSCAN0RPGACC48	$0000\ 0000_H$	<RSCAN0_base> + $19C0_H$	8, 16, 32
RAM test page access register 49	RSCAN0RPGACC49	$0000\ 0000_H$	<RSCAN0_base> + $19C4_H$	8, 16, 32
RAM test page access register 50	RSCAN0RPGACC50	$0000\ 0000_H$	<RSCAN0_base> + $19C8_H$	8, 16, 32
RAM test page access register 51	RSCAN0RPGACC51	$0000\ 0000_H$	<RSCAN0_base> + $19CC_H$	8, 16, 32
RAM test page access register 52	RSCAN0RPGACC52	$0000\ 0000_H$	<RSCAN0_base> + $19D0_H$	8, 16, 32
RAM test page access register 53	RSCAN0RPGACC53	$0000\ 0000_H$	<RSCAN0_base> + $19D4_H$	8, 16, 32
RAM test page access register 54	RSCAN0RPGACC54	$0000\ 0000_H$	<RSCAN0_base> + $19D8_H$	8, 16, 32
RAM test page access register 55	RSCAN0RPGACC55	$0000\ 0000_H$	<RSCAN0_base> + $19DC_H$	8, 16, 32
RAM test page access register 56	RSCAN0RPGACC56	$0000\ 0000_H$	<RSCAN0_base> + $19E0_H$	8, 16, 32
RAM test page access register 57	RSCAN0RPGACC57	$0000\ 0000_H$	<RSCAN0_base> + $19E4_H$	8, 16, 32
RAM test page access register 58	RSCAN0RPGACC58	$0000\ 0000_H$	<RSCAN0_base> + $19E8_H$	8, 16, 32
RAM test page access register 59	RSCAN0RPGACC59	$0000\ 0000_H$	<RSCAN0_base> + $19EC_H$	8, 16, 32
RAM test page access register 60	RSCAN0RPGACC60	$0000\ 0000_H$	<RSCAN0_base> + $19F0_H$	8, 16, 32
RAM test page access register 61	RSCAN0RPGACC61	$0000\ 0000_H$	<RSCAN0_base> + $19F4_H$	8, 16, 32
RAM test page access register 62	RSCAN0RPGACC62	$0000\ 0000_H$	<RSCAN0_base> + $19F8_H$	8, 16, 32
RAM test page access register 63	RSCAN0RPGACC63	$0000\ 0000_H$	<RSCAN0_base> + $19FC_H$	8, 16, 32

Note 1. Available only devices that have 3 channels

Table 17.13 Transmit Buffer p Allocated to Each Channel

	CANm
Transmit buffer p	Transmit buffer 16 × m + 0
	Transmit buffer 16 × m + 1
	Transmit buffer 16 × m + 2
	Transmit buffer 16 × m + 3
	Transmit buffer 16 × m + 4
	Transmit buffer 16 × m + 5
	Transmit buffer 16 × m + 6
	Transmit buffer 16 × m + 7
	Transmit buffer 16 × m + 8
	Transmit buffer 16 × m + 9
	Transmit buffer 16 × m + 10
	Transmit buffer 16 × m + 11
	Transmit buffer 16 × m + 12
	Transmit buffer 16 × m + 13
	Transmit buffer 16 × m + 14
	Transmit buffer 16 × m + 15

Table 17.14 Transmit/Receive FIFO Buffer k Allocated to Each Channel

	CANm
Transmit/receive FIFO buffer k	Transmit/receive FIFO buffer 3 × m + 0
	Transmit/receive FIFO buffer 3 × m + 1
	Transmit/receive FIFO buffer 3 × m + 2

Table 17.15 Transmit Buffer p Linked to the Transmit/Receive FIFO Buffer by the Setting of Bits CFTML[3:0]

Setting of Bits CFTML[3:0]	Transmit Buffer p Linked to the Transmit/Receive FIFO Buffer
0000_B	Transmit buffer 16 × m + 0
0001_B	Transmit buffer 16 × m + 1
0010_B	Transmit buffer 16 × m + 2
0011_B	Transmit buffer 16 × m + 3
0100_B	Transmit buffer 16 × m + 4
0101_B	Transmit buffer 16 × m + 5
0110_B	Transmit buffer 16 × m + 6
0111_B	Transmit buffer 16 × m + 7
1000_B	Transmit buffer 16 × m + 8
1001_B	Transmit buffer 16 × m + 9
1010_B	Transmit buffer 16 × m + 10
1011_B	Transmit buffer 16 × m + 11
1100_B	Transmit buffer 16 × m + 12
1101_B	Transmit buffer 16 × m + 13
1110_B	Transmit buffer 16 × m + 14
1111_B	Transmit buffer 16 × m + 15

Table 17.16 Transmit Buffer p Allocated to the Transmit Queue of Each Channel

Setting of Bits TXQDC[3:0]	Transmit Buffer p Allocated to the Transmit Queue
0000_B	Setting prohibited
0001_B	Setting prohibited
0010_B	Transmit buffer 16 × m + 15 to 16 × m + 13
0011_B	Transmit buffer 16 × m + 15 to 16 × m + 12
0100_B	Transmit buffer 16 × m + 15 to 16 × m + 11
0101_B	Transmit buffer 16 × m + 15 to 16 × m + 10
0110_B	Transmit buffer 16 × m + 15 to 16 × m + 9
0111_B	Transmit buffer 16 × m + 15 to 16 × m + 8
1000_B	Transmit buffer 16 × m + 15 to 16 × m + 7
1001_B	Transmit buffer 16 × m + 15 to 16 × m + 6
1010_B	Transmit buffer 16 × m + 15 to 16 × m + 5
1011_B	Transmit buffer 16 × m + 15 to 16 × m + 4
1100_B	Transmit buffer 16 × m + 15 to 16 × m + 3
1101_B	Transmit buffer 16 × m + 15 to 16 × m + 2
1110_B	Transmit buffer 16 × m + 15 to 16 × m + 1
1111_B	Transmit buffer 16 × m + 15 to 16 × m + 0

17.3.2 RSCAN0CmCFG — Channel Configuration Register (m = 0 to 2)

Access: RSCAN0CmCFG register can be read/written in 32-bit units
RSCAN0CmCFGL, RSCAN0CmCFGH registers can be read/written in 16-bit units
RSCAN0CmCFGLL, RSCAN0CmCFGLH, RSCAN0CmCFGHL, RSCAN0CmCFGHH registers can be read/written in 8-bit units

Address: RSCAN0CmCFG: <RSCAN0_base> + 0000_H + (10_H × m)

RSCAN0CmCFGL: <RSCAN0_base> + 0000_H + (10_H × m),
RSCAN0CmCFGH: <RSCAN0_base> + 0002_H + (10_H × m)

RSCAN0CmCFGLL: <RSCAN0_base> + 0000_H + (10_H × m),
RSCAN0CmCFGLH: <RSCAN0_base> + 0001_H + (10_H × m),
RSCAN0CmCFGHL: <RSCAN0_base> + 0002_H + (10_H × m),
RSCAN0CmCFGHH: <RSCAN0_base> + 0003_H + (10_H × m)

Value after reset: $0000\ 0000_H$

Bit	31	30	29	28	27	26	25	24	23	22	21	20	19	18	17	16
	—	—	—	—	—	—	SJW[1:0]		—	TSEG2[2:0]			TSEG1[3:0]			
Value after reset	0	0	0	0	0	0	0	0	0	0	0	0	0	0	0	0
R/W	R	R	R	R	R	R	R/W	R/W	R	R/W	R/W	R/W	R/W	R/W	R/W	R/W

Bit	15	14	13	12	11	10	9	8	7	6	5	4	3	2	1	0
	—	—	—	—	—	—	BRP[9:0]									
Value after reset	0	0	0	0	0	0	0	0	0	0	0	0	0	0	0	0
R/W	R	R	R	R	R	R	R/W	R/W	R/W	R/W	R/W	R/W	R/W	R/W	R/W	R/W

Table 17.17 RSCAN0CmCFG Register Contents (1/2)

Bit Position	Bit Name	Function
31 to 26	Reserved	When read, the value after reset is read. When writing, write the value after reset.
25, 24	SJW[1:0]	Resynchronization Jump Width Control b25 b24 0 0: 1 Tq 0 1: 2 Tq 1 0: 3 Tq 1 1: 4 Tq
23	Reserved	When read, the value after reset is read. When writing, write the value after reset.
22 to 20	TSEG2[2:0]	Time Segment 2 Control b22 b21 b20 0 0 0: Setting prohibited 0 0 1: 2 Tq 0 1 0: 3 Tq 0 1 1: 4 Tq 1 0 0: 5 Tq 1 0 1: 6 Tq 1 1 0: 7 Tq 1 1 1: 8 Tq

Table 17.17 RSCAN0CmCFG Register Contents (2/2)

Bit Position	Bit Name	Function
19 to 16	TSEG1[3:0]	Time Segment 1 Control b19 b18 b17 b16 0 0 0 0: Setting prohibited 0 0 0 1: Setting prohibited 0 0 1 0: Setting prohibited 0 0 1 1: 4 Tq 0 1 0 0: 5 Tq 0 1 0 1: 6 Tq 0 1 1 0: 7 Tq 0 1 1 1: 8 Tq 1 0 0 0: 9 Tq 1 0 0 1: 10 Tq 1 0 1 0: 11 Tq 1 0 1 1: 12 Tq 1 1 0 0: 13 Tq 1 1 0 1: 14 Tq 1 1 1 0: 15 Tq 1 1 1 1: 16 Tq
15 to 10	Reserved	When read, the value after reset is read. When writing, write the value after reset.
9 to 0	BRP[9:0]	Prescaler Division Ratio Set When these bits are set to P (0 to 1023), the baud rate prescaler divides fCAN by P + 1.

Modify the RSCAN0CmCFG register in channel reset mode or channel halt mode. Set this register in channel reset mode before shifting to channel communication mode or channel wait mode. For a description of the bit timing parameters and settings, see **Section 17.10.1, Initial Settings**.

SJW[1:0] Bits

These bits are used to specify a Tq value for the resynchronization jump width. Allowed values are 1 Tq to 4 Tq, inclusive.
Set a value less than or equal to the value of the TSEG2 bits.

TSEG2[2:0] Bits

These bits are used to specify a Tq value for the length of phase segment 2 (PHASE_SEG2).
Allowed values are 2 Tq to 8 Tq, inclusive.
Set a value smaller than the value of the TSEG1 bits.

TSEG1[3:0] Bits

These bits are used to specify a Tq value for the total length of the propagation segment (PROP_SEG) and phase segment 1 (PHASE_SEG1).
Allowed values are 4 Tq to 16 Tq, inclusive.

BRP[9:0] Bits

The CANmTq clock (fCANTQm) is calculated by dividing the CAN clock (fCAN) by the baud rate prescaler, ((BRP[9:0]) + 1). One clock cycle of the CANmTq clock is 1 Time Quantum (Tq).

17.3.3 RSCAN0CmCTR — Channel Control Register (m = 0 to 2)

Access: RSCAN0CmCTR register can be read/written in 32-bit units
RSCAN0CmCTRL, RSCAN0CmCTRH registers can be read/written in 16-bit units
RSCAN0CmCTRLL, RSCAN0CmCTRLH, RSCAN0CmCTRHL, RSCAN0CmCTRHH registers can be read/written in 8-bit units

Address: RSCAN0CmCTR: <RSCAN0_base> + 0004_H + (10_H × m)

RSCAN0CmCTRL: <RSCAN0_base> + 0004_H + (10_H × m),
RSCAN0CmCTRH: <RSCAN0_base> + 0006_H + (10_H × m)

RSCAN0CmCTRLL: <RSCAN0_base> + 0004_H + (10_H × m),
RSCAN0CmCTRLH: <RSCAN0_base> + 0005_H + (10_H × m),
RSCAN0CmCTRHL: <RSCAN0_base> + 0006_H + (10_H × m),
RSCAN0CmCTRHH: <RSCAN0_base> + 0007_H + (10_H × m)

Value after reset: $0000\ 0005_H$

Bit	31	30	29	28	27	26	25	24	23	22	21	20	19	18	17	16
	—	—	—	—	—	CTMS[1:0]		CTME	ERRD	BOM[1:0]		—	—	—	—	TAIE
Value after reset	0	0	0	0	0	0	0	0	0	0	0	0	0	0	0	0
R/W	R	R	R	R	R	R/W	R/W	R/W	R/W	R/W	R/W	R	R	R	R	R/W

Bit	15	14	13	12	11	10	9	8	7	6	5	4	3	2	1	0
	ALIE	BLIE	OLIE	BORIE	BOEIE	EPIE	EWIE	BEIE	—	—	—	—	RTBO	CSLPR	CHMDC[1:0]	
Value after reset	0	0	0	0	0	0	0	0	0	0	0	0	0	1	0	1
R/W	R/W	R/W	R/W	R/W	R/W	R/W	R/W	R/W	R	R	R	R	R/W	R/W	R/W	R/W

Table 17.18 RSCAN0CmCTR Register Contents (1/2)

Bit Position	Bit Name	Function
31 to 27	Reserved	When read, the value after reset is read. When writing, write the value after reset.
26, 25	CTMS[1:0]	Communication Test Mode Select b26 b25 0 0: Standard test mode 0 1: Listen-only mode 1 0: Self-test mode 0 (external loopback mode) 1 1: Self-test mode 1 (internal loopback mode)
24	CTME	Communication Test Mode Enable 0: Communication test mode is disabled. 1: Communication test mode is enabled.
23	ERRD	Error Display Mode Select 0: Error flags are displayed only for the first error information after bits 14 to 8 in RSCAN0CmERFL are all cleared. 1: Error flags for all error information are displayed.
22, 21	BOM[1:0]	Bus Off Recovery Mode Select b22 b21 0 0: ISO11898-1 compliant 0 1: Entry to channel halt mode automatically at bus-off entry 1 0: Entry to channel halt mode automatically at bus-off end 1 1: Entry to channel halt mode (in bus-off state) by program request
20 to 17	Reserved	When read, the value after reset is read. When writing, write the value after reset.
16	TAIE	Transmit Abort Interrupt Enable 0: Transmit abort interrupt is disabled. 1: Transmit abort interrupt is enabled.
15	ALIE	Arbitration Lost Interrupt Enable 0: Arbitration lost interrupt is disabled. 1: Arbitration lost interrupt is enabled.

Table 17.18 RSCAN0CmCTR Register Contents (2/2)

Bit Position	Bit Name	Function
14	BLIE	Bus Lock Interrupt Enable 0: Bus lock interrupt is disabled. 1: Bus lock interrupt is enabled.
13	OLIE	Overload Frame Transmit Interrupt Enable 0: Overload frame transmit interrupt is disabled. 1: Overload frame transmit interrupt is enabled.
12	BORIE	Bus Off Recovery Interrupt Enable 0: Bus off recovery interrupt is disabled. 1: Bus off recovery interrupt is enabled.
11	BOEIE	Bus Off Entry Interrupt Enable 0: Bus off entry interrupt is disabled. 1: Bus off entry interrupt is enabled.
10	EPIE	Error Passive Interrupt Enable 0: Error passive interrupt is disabled. 1: Error passive interrupt is enabled.
9	EWIE	Error Warning Interrupt Enable 0: Error warning interrupt is disabled. 1: Error warning interrupt is enabled.
8	BEIE	Bus Error Interrupt Enable 0: Bus error interrupt is disabled. 1: Bus error interrupt is enabled.
7 to 4	Reserved	When read, the value after reset is read. When writing, write the value after reset.
3	RTBO	Forcible Return from Bus-off When this bit is set to 1, forcible return from the bus off state is made. This bit is always read as 0.
2	CSLPR	Channel Stop Mode 0: Other than channel stop mode 1: Channel stop mode
1, 0	CHMDC[1:0]	Mode Select b1 b0 0 0: Channel communication mode 0 1: Channel reset mode 1 0: Channel halt mode 1 1: Setting prohibited

CTMS[1:0] Bits

These bits are used to select a communication test mode. Modify these bits in channel halt mode only. These bits are set to 0 in channel reset mode.

CTME Bit

Setting this bit to 1 enables communication test mode. Modify these bits in channel halt mode. This bit is set to 0 in channel reset mode.

ERRD Bit

This bit is used to control the display mode of bits 14 to 8 in the RSCAN0CmERFL register.
When this bit is clear to 0, only the flags of the first error event are set to 1. If two or more errors occur in the first error event, all the flags of the detected errors are set to 1.

When this bit is set to 1, all the flags of errors that have occurred are set to 1 regardless of the error occurrence order.

Modify this bit only in channel reset mode or channel halt mode.

BOM[1:0] Bits

These bits are used to select the bus off recovery mode of the RS-CAN module.

When the BOM[1:0] bits are set to 00_B, return from the bus off state to the error active state is compliant with the CAN specifications. That is, the RS-CAN module reenters the CAN communication (error active state) after 11 consecutive recessive bits are detected 128 times. A bus off recovery interrupt request is generated at the time of return from the bus off state. Even if the CHMDC[1:0] bits are set to 10_B (channel halt mode) before recessive bits are detected 128 times, the RS-CAN module does not transition to channel halt mode until recessive bits are detected 128 times.

When the RS-CAN module reaches the bus off state when the BOM[1:0] bits are set to 01_B, the CHMDC[1:0] bits in the RSCAN0CmCTR register (m = 0 to 2) are set to 10_B and the RS-CAN module transitions to channel halt mode. No bus off recovery interrupt request is generated at the time of return from the bus off state and the TEC[7:0] and REC[7:0] bits in the RSCAN0CmSTS register are cleared to 00_H.

When the RS-CAN module reaches the bus off state when the BOM[1:0] bits are set to 10_B, the CHMDC[1:0] bits are set to 10_B and the RS-CAN module transitions to channel halt mode after return from the bus off state (11 consecutive recessive bits are detected 128 times). A bus off recovery interrupt request is generated at the time of return from the bus off state and the TEC[7:0] and REC[7:0] bits are cleared to 00_H.

When the BOM[1:0] bits are set to 11_B and the CHMDC[1:0] bits are set to 10_B while the RS-CAN module is in the bus off state, the RS-CAN module transitions to channel halt mode. No bus off recovery interrupt request is generated at the time of return from the bus off state and the TEC[7:0] and REC[7:0] bits are cleared to 00_H. However, if 11 consecutive recessive bits are detected 128 times and the RS-CAN module has recovered to the error active state from the bus off state before the CHMDC[1:0] bits are set to 10_B, a bus off recovery interrupt request is generated.

If a program writes to the CHMDC[1:0] bit at the same time as the RS-CAN module transition to channel halt mode (at bus off entry when the BOM[1:0] bits are 01B or at bus off end when the BOM[1:0] bits are 10_B), the program's writing takes precedence. Modify the BOM[1:0] bits only in channel reset mode.

TAIE Bit

When transmit abort of the transmit buffer is completed with the TAIE bit set to 1, an interrupt request is generated. Modify this bit only in channel reset mode.

ALIE Bit

When the ALF flag in the RSCAN0CmERFL register is set to 1 with the ALIE bit set to 1, an error interrupt request is generated. Modify this bit only in channel reset mode.

BLIE Bit

When the BLF flag in the RSCAN0CmERFL register is set to 1 with the BLIE bit set to 1, an error interrupt request is generated. Modify this bit only in channel reset mode.

OLIE Bit

When the OVLF flag in the RSCAN0CmERFL register is set to 1 with the OLIE bit set to 1, an error interrupt request is generated. Modify this bit only in channel reset mode.

BORIE Bit

When the BORF flag in the RSCAN0CmERFL register is set to 1 with the BORIE bit set to 1, an error interrupt request is generated. Modify this bit only in channel reset mode.

BOEIE Bit

When the BOEF flag in the RSCAN0CmERFL register is set to 1 with the BOEIE bit set to 1, an error interrupt request is generated. Modify this bit only in channel reset mode.

EPIE Bit

When the EPF flag in the RSCAN0CmERFL register is set to 1 with the EPIE bit set to 1, an error interrupt request is generated. Modify this bit only in channel reset mode.

EWIE Bit

When the EWF flag in the RSCAN0CmERFL register is set to 1 with the EWIE bit set to 1, an error interrupt request is generated. Modify this bit only in channel reset mode.

BEIE Bit

When the BEF flag in the RSCAN0CmERFL register is set to 1 with the BEIE bit set to 1, an error interrupt request is generated. Modify this bit only in channel reset mode.

RTBO Bit

Setting this bit to 1 in the bus off state forcibly returns the state from the bus off state to the error active state. This bit is automatically cleared to 0. Setting this bit to 1 clears the TEC[7:0] and REC[7:0] bits in the RSCAN0CmSTS register to 00_H and also clears the BOSTS flag in the RSCAN0CmSTS register to 0 (not in bus off state). The other registers remain unchanged. No bus off recovery interrupt request is generated upon return from the bus off state in this case. Use this bit only when the BOM[1:0] bits in the RSCAN0CmCTR register are 00_B (ISO11898-1 compliant).

A delay of up to 1 CAN bit time occurs after the RTBO bit is set to 1 until the RSCAN module transitions to the error active state. Set this bit to 1 in channel communication mode.

CSLPR Bit

Setting this bit to 1 places the channel into channel stop mode.
Clearing this bit to 0 makes the channel exit channel stop mode.
This bit should not be modified in channel communication mode or channel wait mode.

CHMDC[1:0] Bits

These bits are used to select a channel mode (channel communication mode, channel reset mode, or channel halt mode). For details, see **Section 17.5.2, Channel Modes**. Setting the CSLPR bit to 1 in channel reset mode allows transition to channel stop mode. Do not set the CHMDC[1:0] bits to 11_B. When the CAN module has automatically transitioned to channel halt mode based on the setting of the BOM[1:0] bits, the CHMDC[1:0] bits automatically become 10_B.

17.3.4 RSCAN0CmSTS — Channel Status Register (m = 0 to 2)

Access: RSCAN0CmSTS register can be read only in 32-bit units
RSCAN0CmSTSL, RSCAN0CmSTSH registers can be read only in 16-bit units
RSCAN0CmSTSLL, RSCAN0CmSTSLH, RSCAN0CmSTSHL, RSCAN0CmSTSHH registers can be read only in 8-bit units

Address: RSCAN0CmSTS: <RSCAN0_base> + 0008_H + (10_H × m)

RSCAN0CmSTSL: <RSCAN0_base> + 0008_H + (10_H × m),
RSCAN0CmSTSH: <RSCAN0_base> + $000A_H$ + (10_H × m)

RSCAN0CmSTSLL: <RSCAN0_base> + 0008_H + (10_H × m),
RSCAN0CmSTSLH: <RSCAN0_base> + 0009_H + (10_H × m),
RSCAN0CmSTSHL: <RSCAN0_base> + $000A_H$ + (10_H × m),
RSCAN0CmSTSHH: <RSCAN0_base> + $000B_H$ + (10_H × m)

Value after reset: $0000\ 0005_H$

Bit	31	30	29	28	27	26	25	24	23	22	21	20	19	18	17	16
	TEC[7:0]								REC[7:0]							
Value after reset	0	0	0	0	0	0	0	0	0	0	0	0	0	0	0	0
R/W	R	R	R	R	R	R	R	R	R	R	R	R	R	R	R	R

Bit	15	14	13	12	11	10	9	8	7	6	5	4	3	2	1	0
	—	—	—	—	—	—	—	—	COMSTS	RECSTS	TRMSTS	BOSTS	EPSTS	CSLPSTS	CHLTSTS	CRSTSTS
Value after reset	0	0	0	0	0	0	0	0	0	0	0	0	0	1	0	1
R/W	R	R	R	R	R	R	R	R	R	R	R	R	R	R	R	R

Table 17.19 RSCAN0CmSTS Register Contents

Bit Position	Bit Name	Function
31 to 24	TEC[7:0]	The transmit error counter (TEC) can be read.
23 to 16	REC[7:0]	The receive error counter (REC) can be read.
15 to 8	Reserved	When read, the value after reset is read.
7	COMSTS	Communication Status Flag 0: Communication is not ready. 1: Communication is ready.
6	RECSTS	Receive Status Flag 0: Bus idle, in transmission or bus off state 1: In reception
5	TRMSTS	Transmit Status Flag 0: Bus idle or in reception 1: In transmission or bus off state
4	BOSTS	Bus Off Status Flag 0: Not in bus off state 1: In bus off state
3	EPSTS	Error Passive Status Flag 0: Not in error passive state 1: In error passive state
2	CSLPSTS	Channel Stop Status Flag 0: Not in channel stop mode 1: In channel stop mode
1	CHLTSTS	Channel Halt Status Flag 0: Not in channel halt mode 1: In channel halt mode
0	CRSTSTS	Channel Reset Status Flag 0: Not in channel reset mode 1: In channel reset mode

TEC[7:0] Bits

These bits contain the transmit error counter value. For transmit error counter increment/decrement conditions, see the CAN specification (ISO11898-1).

These bits are cleared to 0 in channel reset mode.

REC[7:0] Bits

These bits contain the receive error counter value. For receive error counter increment/decrement conditions, see the CAN specifications (ISO11898-1).

These bits are cleared to 0 in channel reset mode.

COMSTS Flag

This bit indicates that communication is ready.

This flag becomes 1 when the CAN module has detected 11 consecutive recessive bits after it has transitioned from channel reset mode or channel halt mode to channel communication mode. This flag is cleared to 0 in channel reset mode or channel halt mode.

RECSTS Flag

This flag is set to 1 when reception has started, and is cleared to 0 when the bus has become idle or transmission has started.

TRMSTS Flag

This flag is set to 1 when transmission has started, and is cleared to 0 when the bus has become idle or reception has started. This flag remains 1 in the bus off state.

BOSTS Flag

This flag is set to 1 when the bus off state (TEC[7:0] > 255) is entered. It is cleared to 0 when the CAN module has exited the bus off state.

EPSTS Flag

This flag is set to 1 when the RS-CAN module has entered the error passive state ((128 ≤ TEC[7:0] ≤ 255) or (128 ≤ REC[7:0])), It is cleared to 0 when the RS-CAN module has exited the error passive state or has entered channel reset mode.

CSLPSTS Flag

This flag is set to 1 when the CAN module has transitioned to channel stop mode, and is cleared to 0 when the CAN module has returned from channel stop mode.

CHLTSTS Flag

This flag is set to 1 when the CAN module has transitioned to channel halt mode, and is cleared to 0 when the CAN module has returned from channel halt mode.

CRSTSTS Flag

This flag is set to 1 when the CAN module has transitioned to channel reset mode, and is cleared to 0 when the CAN module has transitioned to channel communication mode or channel halt mode. This flag remains 1 when the CAN module transitions from channel reset mode to channel stop mode.

17.3.5 RSCAN0CmERFL — Channel Error Flag Register (m = 0 to 2)

Access: RSCAN0CmERFL register can be read/written in 32-bit units
RSCAN0CmERFLL, RSCAN0CmERFLH registers can be read/written in 16-bit units
RSCAN0CmERFLLL, RSCAN0CmERFLLH, RSCAN0CmERFLHL, RSCAN0CmERFLHH registers can be read/written in 8-bit units

Address: RSCAN0CmERFL: <RSCAN0_base> + $000C_H$ + (10_H × m)

RSCAN0CmERFLL: <RSCAN0_base> + $000C_H$ + (10_H × m),
RSCAN0CmERFLH: <RSCAN0_base> + $000E_H$ + (10_H × m)

RSCAN0CmERFLLL: <RSCAN0_base> + $000C_H$ + (10_H × m),
RSCAN0CmERFLLH: <RSCAN0_base> + $000D_H$ + (10_H × m),
RSCAN0CmERFLHL: <RSCAN0_base> + $000E_H$ + (10_H × m),
RSCAN0CmERFLHH: <RSCAN0_base> + $000F_H$ + (10_H × m)

Value after reset: $0000\ 0000_H$

Bit	31	30	29	28	27	26	25	24	23	22	21	20	19	18	17	16
	—	CRCREG[14:0]														
Value after reset	0	0	0	0	0	0	0	0	0	0	0	0	0	0	0	0
R/W	R	R	R	R	R	R	R	R	R	R	R	R	R	R	R	R

Bit	15	14	13	12	11	10	9	8	7	6	5	4	3	2	1	0
	—	ADERR	B0ERR	B1ERR	CERR	AERR	FERR	SERR	ALF	BLF	OVLF	BORF	BOEF	EPF	EWF	BEF
Value after reset	0	0	0	0	0	0	0	0	0	0	0	0	0	0	0	0
R/W	R	R/W*1	R/W*1	R/W*1	R/W*1	R/W*1	R/W*1	R/W*1	R/W*1	R/W*1	R/W*1	R/W*1	R/W*1	R/W*1	R/W*1	R/W*1

Note 1. The only effective value for writing to this flag bit is 0, which clears the bit. Otherwise writing to the bit results in retention of its state.

Table 17.20 RSCAN0CmERFL Register Contents (1/2)

Bit Position	Bit Name	Function
31	Reserved	When read, the value after reset is read. When writing, write the value after reset.
30 to 16	CRCREG[14:0]	CRC Calculation Data A CRC value calculated based on the transmit message or receive message is indicated.
15	Reserved	When read, the value after reset is read. When writing, write the value after reset.
14	ADERR	ACK Delimiter Error Flag 0: No ACK delimiter error is detected. 1: ACK delimiter error is detected.
13	B0ERR	Dominant Bit Error Flag 0: No dominant bit error is detected. 1: Dominant bit error is detected.
12	B1ERR	Recessive Bit Error Flag 0: No recessive bit error is detected. 1: Recessive bit error is detected.
11	CERR	CRC Error Flag 0: No CRC error is detected. 1: CRC error is detected.
10	AERR	ACK Error Flag 0: No ACK error is detected. 1: ACK error is detected.
9	FERR	Form Error Flag 0: No form error is detected. 1: Form error is detected.

Table 17.20 RSCAN0CmERFL Register Contents (2/2)

Bit Position	Bit Name	Function
8	SERR	Stuff Error Flag 0: No stuff error is detected. 1: Stuff error is detected.
7	ALF	Arbitration-lost Flag 0: No arbitration-lost is detected. 1: Arbitration-lost is detected.
6	BLF	Bus Lock Flag 0: No channel bus lock is detected. 1: Channel bus lock is detected.
5	OVLF	Overload Flag 0: No overload is detected. 1: Overload is detected.
4	BORF	Bus Off Recovery Flag 0: No bus off recovery is detected. 1: Bus off recovery is detected.
3	BOEF	Bus Off Entry Flag 0: No bus off entry is detected. 1: Bus off entry is detected.
2	EPF	Error Passive Flag 0: No error passive is detected. 1: Error passive is detected.
1	EWF	Error Warning Flag 0: No error warning is detected. 1: Error warning is detected.
0	BEF	Bus Error Flag 0: No channel bus error is detected. 1: Channel bus error is detected.

See the CAN specification (ISO11898-1) for a description of error occurrence conditions. To clear each flag of this register, the program must write a 0 to the corresponding bit. These flags cannot be set to 1 by the program. If any of these flags is set to 1 at the same time that the program writes 0 to the flag, the flag is still set to 1. The channel reset mode transition clears all of these flags to 0.

If the ERRD bit in the RSCAN0CmCTR register is set to 0 (ie, only the flags for the first error event are displayed) and an error related to bits 14 to 8 of RSCAN0CmERFL is detected, the flag bits are only set by the error event if bits 14 to 8 were all 0 at the when time the error occurred.

CRCREG[14:0] Flag

When the CTME bit in the RSCAN0CmCTR register is set to 1 (communication test mode is enabled), the CRC value calculated based on the transmit or receive message can be read. When the CTME bit is set to 0 (communication test mode is disabled), these bits are always read as 0.

ADERR Flag

This flag is set to 1 when a form error has been detected in the ACK delimiter during transmission.

B0ERR Flag

This flag is set to 1 when a recessive bit has been detected though a dominant bit was transmitted.

B1ERR Flag

This flag is set to 1 when a dominant bit has been detected though a recessive bit was transmitted.

CERR Flag

This flag is set to 1 when a CRC error has been detected.

AERR Flag

This flag is set to 1 when an ACK error has been detected.

FERR Flag

This flag is set to 1 when a form error has been detected.

SERR Flag

This flag is set to 1 when a stuff error has been detected.

ALF Flag

This flag is set to 1 when an arbitration-lost has been detected.

BLF Flag

This flag is set to 1 when 32 consecutive dominant bits have been detected on the CAN bus in channel communication mode. After that, a bus lock can be detected again when either of the following conditions is met.

- A recessive bit is detected after the BLF bit has been cleared from 1 to 0.
- The CAN module transitions to channel reset mode and returns to channel communication mode after the BLF bit has been cleared from 1 to 0.

OVLF Flag

This flag is set to 1 when the overload frame transmit condition has been detected when performing reception or transmission.

BORF Flag

This flag is set to 1 when 11 consecutive recessive bits have been detected 128 times and the CAN module returns from the bus off state. However, this flag is not set to 1 if the CAN module returns from the bus off state in any of the following ways before 11 consecutive recessive bits are detected 128 times.

- The CHMDC[1:0] bits in the RSCAN0CmCTR register are set to 01_B (channel reset mode).
- The RTBO bit in the RSCAN0CmCTR register is set to 1 (forcible return from the bus off state is made).
- The BOM[1:0] bits in the RSCAN0CmCTR register are set to 01_B (transition to channel halt mode at bus off entry).
- The CHMDC[1:0] bits in the RSCAN0CmCTR register are set to 10_B (channel halt mode) before 11 consecutive recessive bits are detected 128 times with the BOM[1:0] bits set to 11_B (transition to channel halt mode upon a request from the program during bus off).

BOEF Flag

This flag is set to 1 when the bus off state is reached (TEC[7:0] value > 255). This flag is also set to 1 if the bus off state is reached when the BOM[1:0] bits in the RSCAN0CmCTR register (m = 0 to 2) set to 01_B (transition to channel halt mode at bus off entry).

EPF Flag

This flag becomes 1 when the error passive state is reached (REC[7:0] or TEC[7:0] value > 127). This flag becomes 1 only when the REC[7:0] or TEC[7:0] value first exceeds 127. Therefore, if the program writes 0 to this flag while the value of REC[7:0] or TEC[7:0] remains over 127, this bit is not set to 1 until both REC [7:0] and TEC[7:0] values become 127 or less and then the REC[7:0] or TEC[7:0] value exceeds 127 again.

EWF Flag

This flag is set to 1 only when the REC[7:0] or TEC[7:0] value first exceeds 95. Therefore, if the program writes 0 to this flag while the value of REC[7:0] or TEC[7:0] remains over 95, this bit is not set to 1 until both REC [7:0] and TEC[7:0] values become 95 or less and then the REC[7:0] or TEC[7:0] value exceeds 95 again.

BEF Flag

This flag is set to 1 when any one of the ADERR, B0ERR, B1ERR, CERR, AERR, FERR, and SERR flags in the RSCAN0CmERFL register is set to 1.

NOTE

To clear the flag of this register to 0, use a store instruction to write “0” to the given flag and “1” to the other flags.

17.3.6 RSCAN0GCFG — Global Configuration Register

Access: RSCAN0GCFG register can be read/written in 32-bit units
RSCAN0GCFGL, RSCAN0GCFGH registers can be read/written in 16-bit units
RSCAN0GCFGLL, RSCAN0GCFGLH, RSCAN0GCFGHL, RSCAN0GCFGHH registers can be read/written in 8-bit units

Address: RSCAN0GCFG: <RSCAN0_base> + 0084_H

RSCAN0GCFGL: <RSCAN0_base> + 0084_H, RSCAN0GCFGH: <RSCAN0_base> + 0086_H

RSCAN0GCFGLL: <RSCAN0_base> + 0084_H, RSCAN0GCFGLH: <RSCAN0_base> + 0085_H,
RSCAN0GCFGHL: <RSCAN0_base> + 0086_H, RSCAN0GCFGHH: <RSCAN0_base> + 0087_H

Value after reset: $0000\ 0000_H$

Bit	31	30	29	28	27	26	25	24	23	22	21	20	19	18	17	16
	ITRCP															
Value after reset	0	0	0	0	0	0	0	0	0	0	0	0	0	0	0	0
R/W	R/W	R/W	R/W	R/W	R/W	R/W	R/W	R/W	R/W	R/W	R/W	R/W	R/W	R/W	R/W	R/W

Bit	15	14	13	12	11	10	9	8	7	6	5	4	3	2	1	0
	TSBTCS[2:0]			TSSS	TSP[3:0]				—	—	—	DCS	MME	DRE	DCE	TPRI
Value after reset	0	0	0	0	0	0	0	0	0	0	0	0	0	0	0	0
R/W	R/W	R/W	R/W	R/W	R/W	R/W	R/W	R/W	R	R	R	R/W	R/W	R/W	R/W	R/W

Table 17.21 RSCAN0GCFG Register Contents (1/2)

Bit Position	Bit Name	Function
31 to 16	ITRCP[15:0]	Interval Timer Prescaler Set When these bits are set to M, the pclk is divided by M. Setting 0000_H is prohibited when the interval timer is in use.
15 to 13	TSBTCS[2:0]	Timestamp Clock Source Select b15 b14 b13 0 0 0: Channel 0 bit time clock 0 0 1: Channel 1 bit time clock 0 1 0: Channel 2 bit time clock 0 1 1: Setting prohibited 1 0 0: Setting prohibited 1 0 1: Setting prohibited 1 1 0: Setting prohibited 1 1 1: Setting prohibited
12	TSSS	Timestamp Source Select 0: pclk/2*[1] 1: Bit time clock
11 to 8	TSP[3:0]	Timestamp Clock Source Division b11 b10 b9 b8 0 0 0 0: Not divided 0 0 0 1: Divided by 2 0 0 1 0: Divided by 4 0 0 1 1: Divided by 8 0 1 0 0: Divided by 16 0 1 0 1: Divided by 32 0 1 1 0: Divided by 64 0 1 1 1: Divided by 128 1 0 0 0: Divided by 256 1 0 0 1: Divided by 512 1 0 1 0: Divided by 1024 1 0 1 1: Divided by 2048 1 1 0 0: Divided by 4096 1 1 0 1: Divided by 8192 1 1 1 0: Divided by 16384 1 1 1 1: Divided by 32768

Table 17.21 RSCAN0GCFG Register Contents (2/2)

Bit Position	Bit Name	Function
7 to 5	Reserved	When read, the value after reset is read. When writing, write the value after reset.
4	DCS	CAN Clock Source Select 0: clkc 1: clk_xincan
3	MME	Mirror Function Enable 0: Mirror function is disabled. 1: Mirror function is enabled.
2	DRE	DLC Replacement Enable 0: DLC replacement is disabled. 1: DLC replacement is enabled.
1	DCE	DLC Check Enable 0: DLC check is disabled. 1: DLC check is enabled.
0	TPRI	Transmit Priority Select 0: ID priority 1: Transmit buffer number priority

Note 1. When specifying pclk/2 as the timestamp counter count source, set bits TSBTCS[2:0] to 000_B.

Modify the RSCAN0GCFG register only in global reset mode.

ITRCP[15:0] Bits

These bits are used to set a clock source division value of the interval timer for FIFO buffers. See **Section 17.7.3.1, Interval Transmission Function**.

TSBTCS[2:0] Bits

When the TSSS bit is 1, these bits are used to select the channel of the bit time clock that will be the clock source of the timestamp counter.

TSSS Bit

This bit is used to select a clock source of the timestamp counter.

TSP[3:0] Bits

A clock obtained by dividing the clock source selected with the TSBTCS[2:0] bits and TSSS bit according to the TSP[3:0] bits is used as the timestamp counter count source.

DCS Bit

When this bit is set to 0, clkc is used as the clock source of the CAN clock (fCAN).

When this bit is set to 1, clk_xincan is used as the clock source of the CAN clock (fCAN).

MME Bit

Setting this bit to 1 makes the mirror function available.

DRE Bit

When the DRE bit is set to 1, the DLC value of the receive rule is stored in the buffer instead of the DLC value of the received message after the DLC value has passed through the DLC filter. In this case, a value of 00_H is stored in each data byte beyond the DLC value of the receive rule.

The DLC replacement function is only available when the DCE bit is set to 1 (DLC check is enabled).

DCE Bit

Setting this bit to 1 makes the DLC check function available. When disabling the DLC check function, set the GAFLDLC[3:0] bits in the RSCAN0GAFLP0j register to 0000_B before clearing the DCE bit in the RSCAN0GCFG register to 0.

TPRI Bit

This bit is used to set the transmit priority.

When this bit is set to 0, ID priority is selected and the transmit priority complies with the CAN bus arbitration rule (ISO11898-1 specifications). When this bit is set to 1, transmit buffer number priority is selected and the lowest transmit buffer number of those has the highest priority.

While the transmit queue is in use, this bit should be set to 0.

17.3.7 RSCAN0GCTR — Global Control Register

Access: RSCAN0GCTR register can be read/written in 32-bit units
RSCAN0GCTRL, RSCAN0GCTRH registers can be read/written in 16-bit units
RSCAN0GCTRLL, RSCAN0GCTRLH, RSCAN0GCTRHL, RSCAN0GCTRHH registers can be read/written in 8-bit units

Address: RSCAN0GCTR: <RSCAN0_base> + 0088_H

RSCAN0GCTRL: <RSCAN0_base> + 0088_H, RSCAN0GCTRH: <RSCAN0_base> + $008A_H$

RSCAN0GCTRLL: <RSCAN0_base> + 0088_H, RSCAN0GCTRLH: <RSCAN0_base> + 0089_H,
RSCAN0GCTRHL: <RSCAN0_base> + $008A_H$, RSCAN0GCTRHH: <RSCAN0_base> + $008B_H$

Value after reset: $0000\ 0005_H$

Bit	31	30	29	28	27	26	25	24	23	22	21	20	19	18	17	16
	—	—	—	—	—	—	—	—	—	—	—	—	—	—	—	TSRST
Value after reset	0	0	0	0	0	0	0	0	0	0	0	0	0	0	0	0
R/W	R	R	R	R	R	R	R	R	R	R	R	R	R	R	R	R/W

Bit	15	14	13	12	11	10	9	8	7	6	5	4	3	2	1	0
	—	—	—	—	—	THLEIE	MEIE	DEIE	—	—	—	—	—	GSLPR	GMDC[1:0]	
Value after reset	0	0	0	0	0	0	0	0	0	0	0	0	0	1	0	1
R/W	R	R	R	R	R	R/W	R/W	R/W	R	R	R	R	R	R/W	R/W	R/W

Table 17.22 RSCAN0GCTR Register Contents

Bit Position	Bit Name	Function
31 to 17	Reserved	When read, the value after reset is read. When writing, write the value after reset.
16	TSRST	Timestamp Counter Reset Setting the TSRST bit to 1 resets the timestamp counter. This bit is always read as 0.
15 to 11	Reserved	When read, the value after reset is read. When writing, write the value after reset.
10	THLEIE	Transmit History Buffer Overflow Interrupt Enable 0: Transmit history buffer overflow interrupt is disabled. 1: Transmit history buffer overflow interrupt is enabled.
9	MEIE	FIFO Message Lost Interrupt Enable 0: FIFO message lost interrupt is disabled. 1: FIFO message lost interrupt is enabled.
8	DEIE	DLC Error Interrupt Enable 0: DLC error interrupt is disabled. 1: DLC error interrupt is enabled.
7 to 3	Reserved	When read, the value after reset is read. When writing, write the value after reset.
2	GSLPR	Global Stop Mode 0: Other than global stop mode 1: Global stop mode
1, 0	GMDC[1:0]	Global Mode Select b1 b0 0 0: Global operating mode 0 1: Global reset mode 1 0: Global test mode 1 1: Setting prohibited

TSRST Bit

This bit is used to reset the timestamp counter. When this bit is set to 1, the RSCAN0GTSC register is cleared to 0000_H.

THLEIE Bit

When the THLEIE bit is set to 1 and the THLES flag in the RSCAN0GERFL register is set to 1, an interrupt request is generated. Modify this bit only in global reset mode.

MEIE Bit

When the MEIE bit is set to 1 and the MES flag in the RSCAN0GERFL register is set to 1, an interrupt request is generated. Modify this bit only in global reset mode.

DEIE Bit

When the DEIE bit is set to 1 and the DEF flag in the RSCAN0GERFL register is set to 1, an interrupt request is generated. Modify this bit only in global reset mode.

GSLPR Bit

Setting this bit to 1 places the RSCAN module into global stop mode.
Clearing this bit to 0 makes the RSCAN module leave from global stop mode.
This bit should not be modified in global operating mode or global test mode.

GMDC[1:0] Bits

These bits are used to select the mode of entire RS-CAN module (global operating mode, global reset mode, or global test mode). For details, see **Section 17.5.1, Global Modes**. Setting the GSLPR bit to 1 when in global reset mode places the RS-CAN module into global stop mode.

17.3.8 RSCAN0GSTS — Global Status Register

Access: RSCAN0GSTS register can be read only in 32-bit units
RSCAN0GSTSL, RSCAN0GSTSH registers can be read only in 16-bit units
RSCAN0GSTSLL, RSCAN0GSTSLH, RSCAN0GSTSHL, RSCAN0GSTSHH registers can be read only in 8-bit units

Address: RSCAN0GSTS: <RSCAN0_base> + $008C_H$

RSCAN0GSTSL: <RSCAN0_base> + $008C_H$, RSCAN0GSTSH: <RSCAN0_base> + $008E_H$

RSCAN0GSTSLL: <RSCAN0_base> + $008C_H$, RSCAN0GSTSLH: <RSCAN0_base> + $008D_H$,
RSCAN0GSTSHL: <RSCAN0_base> + $008E_H$, RSCAN0GSTSHH: <RSCAN0_base> + $008F_H$

Value after reset: $0000\ 000D_H$

Bit	31	30	29	28	27	26	25	24	23	22	21	20	19	18	17	16
	—	—	—	—	—	—	—	—	—	—	—	—	—	—	—	—
Value after reset	0	0	0	0	0	0	0	0	0	0	0	0	0	0	0	0
R/W	R	R	R	R	R	R	R	R	R	R	R	R	R	R	R	R

Bit	15	14	13	12	11	10	9	8	7	6	5	4	3	2	1	0
	—	—	—	—	—	—	—	—	—	—	—	—	GRAMINIT	GSLPSTS	GHLTSTS	GRSTSTS
Value after reset	0	0	0	0	0	0	0	0	0	0	0	0	1	1	0	1
R/W	R	R	R	R	R	R	R	R	R	R	R	R	R	R	R	R

Table 17.23 RSCAN0GSTS Register Contents

Bit Position	Bit Name	Function
31 to 4	Reserved	When read, the value after reset is read.
3	GRAMINIT	CAN RAM Initialization Status Flag 0: CAN RAM initialization is completed. 1: CAN RAM initialization is ongoing.
2	GSLPSTS	Global Stop Status Flag 0: Not in global stop mode 1: In global stop mode
1	GHLTSTS	Global Test Status Flag 0: Not in global test mode 1: In global test mode
0	GRSTSTS	Global Reset Status Flag 0: Not in global reset mode 1: In global reset mode

GRAMINIT Flag

This flag indicates the initialization status of the CAN RAM.

This flag is set to 1 after the MCU has been reset, and is cleared to 0 when CAN RAM initialization is completed.

GSLPSTS Flag

This flag is set to 1 when the CAN module has transitioned to global stop mode, and is cleared to 0 when the CAN module has returned from global stop mode.

GHLTSTS Flag

This flag is set to 1 when the CAN module has transitioned to global test mode, and is cleared to 0 when the CAN module has exited global test mode.

GRSTSTS Flag

This flag is set to 1 when the CAN module has transitioned to global reset mode, and is cleared to 0 when the CAN module has exited global reset mode. This flag remains 1 even when the CAN module has transitioned from global reset mode to global stop mode.

17.3.9 RSCAN0GERFL — Global Error Flag Register

Access: RSCAN0GERFL register can be read/written in 32-bit units
RSCAN0GERFLL, RSCAN0GERFLH registers can be read/written in 16-bit units
RSCAN0GERFLLL, RSCAN0GERFLLH, RSCAN0GERFLHL, RSCAN0GERFLHH registers can be read/written in 8-bit units

Address: RSCAN0GERFL: <RSCAN0_base> + 0090_H

RSCAN0GERFLL: <RSCAN0_base> + 0090_H, RSCAN0GERFLH: <RSCAN0_base> + 0092_H

RSCAN0GERFLLL: <RSCAN0_base> + 0090_H, RSCAN0GERFLLH: <RSCAN0_base> + 0091_H, RSCAN0GERFLHL: <RSCAN0_base> + 0092_H, RSCAN0GERFLHH: <RSCAN0_base> + 0093_H

Value after reset: $0000\ 0000_H$

Bit	31	30	29	28	27	26	25	24	23	22	21	20	19	18	17	16
	—	—	—	—	—	—	—	—	—	—	—	—	—	—	—	—
Value after reset	0	0	0	0	0	0	0	0	0	0	0	0	0	0	0	0
R/W	R	R	R	R	R	R	R	R	R	R	R	R	R	R	R	R

Bit	15	14	13	12	11	10	9	8	7	6	5	4	3	2	1	0
	—	—	—	—	—	—	—	—	—	—	—	—	—	THLES	MES	DEF
Value after reset	0	0	0	0	0	0	0	0	0	0	0	0	0	0	0	0
R/W	R	R	R	R	R	R	R	R	R	R	R	R	R	R	R	R/W*1

Note 1. The only effective value for writing to this flag bit is 0, which clears the bit. Otherwise writing to the bit results in retention of its state.

Table 17.24 RSCAN0GERFL Register Contents

Bit Position	Bit Name	Function
31 to 3	Reserved	When read, the value after reset is read. When writing, write the value after reset.
2	THLES	Transmit History Buffer Overflow Status Flag 0: No transmit history buffer overflow has occurred. 1: A transmit history buffer overflow has occurred.
1	MES	FIFO Message Lost Status Flag 0: No FIFO message lost error has occurred. 1: A FIFO message lost error has occurred.
0	DEF	DLC Error Flag 0: No DLC error has occurred. 1: A DLC error has occurred.

All flags in the RSCAN0GERFL register are cleared to 0 in global reset mode.

THLES Flag

The THLES flag is set to 1 when any one of the THLELT flags in the RSCAN0THLSTSm register (m = 0 to 2) is set to 1.

This flag is cleared to 0 when the THLELT flags of all channels are set to 0.

MES Flag

The MES flag is set to 1 when any one of the RFMLT flags in the RSCAN0RFSTSx register (x = 0 to 7) or the CFMLT flags in the RSCAN0CFSTSk register (k = 0 to 5) is set to 1.

This flag is cleared to 0 when all RFMLT flags and CFMLT flags are set to 0.

DEF Flag

The DEF flag is set to 1 when an error has been detected during the DLC check. The program can clear this flag by writing 0 to this bit.

To clear the flags of the register to 0, the program must write 0 to the corresponding flag to be cleared. When writing 0, using store instruction, set the bit to be set to “0” to “0”, and the bits not to be set to “0” to “1”.

17.3.10 RSCAN0GTINTSTS0 — Global TX Interrupt Status Register 0

Access: RSCAN0GTINTSTS0 register can be read only in 32-bit units
RSCAN0GTINTSTS0L, RSCAN0GTINTSTS0H registers can be read only in 16-bit units
RSCAN0GTINTSTS0LL, RSCAN0GTINTSTS0LH, RSCAN0GTINTSTS0HL, RSCAN0GTINTSTS0HH registers can be read only in 8-bit units

Address: RSCAN0GTINTSTS0: <RSCAN0_base> + 0460_H

RSCAN0GTINTSTS0L: <RSCAN0_base> + 0460_H, RSCAN0GTINTSTS0H: <RSCAN0_base> + 0462_H

RSCAN0GTINTSTS0LL: <RSCAN0_base> + 0460_H, RSCAN0GTINTSTS0LH: <RSCAN0_base> + 0461_H, RSCAN0GTINTSTS0HL: <RSCAN0_base> + 0462_H, RSCAN0GTINTSTS0HH: <RSCAN0_base> + 0463_H

Value after reset: $0000\ 0000_H$

Bit	31	30	29	28	27	26	25	24	23	22	21	20	19	18	17	16
	—	—	—	—	—	—	—	—	—	—	—	THIF2	CFTIF2	TQIF2	TAIF2	TSIF2
Value after reset	0	0	0	0	0	0	0	0	0	0	0	0	0	0	0	0
R/W	R	R	R	R	R	R	R	R	R	R	R	R*1	R*1	R*1	R*1	R*1

Bit	15	14	13	12	11	10	9	8	7	6	5	4	3	2	1	0
	—	—	—	THIF1	CFTIF1	TQIF1	TAIF1	TSIF1	—	—	—	THIF0	CFTIF0	TQIF0	TAIF0	TSIF0
Value after reset	0	0	0	0	0	0	0	0	0	0	0	0	0	0	0	0
R/W	R	R	R	R*1	R*1	R*1	R*1	R*1	R	R	R	R*1	R*1	R*1	R*1	R*1

Note 1. This bit is automatically cleared in global reset or channel reset mode.

Table 17.25 RSCAN0GTINTSTS0 Register Contents (1/2)

Bit Position	Bit Name	Function
31 to 21	Reserved	When read, the value after reset is read.
20	THIF2	Channel 2 Transmit History Interrupt Status Flag 0: Transmit history interrupt is not requested. 1: Transmit history interrupt is requested.
19	CFTIF2	Channel 2 Transmit/receive FIFO Transmit Interrupt Status Flag 0: Transmit/receive FIFO transmit interrupt is not requested. 1: Transmit/receive FIFO transmit interrupt is requested.
18	TQIF2	Channel 2 Transmit Queue Interrupt Status Flag 0: Transmit queue interrupt is not requested. 1: Transmit queue interrupt is requested.
17	TAIF2	Channel 2 Transmit Buffer Abort Interrupt Status Flag 0: Transmit buffer abort interrupt is not requested. 1: Transmit buffer abort interrupt is requested.
16	TSIF2	Channel 2 Transmit Buffer Interrupt Status Flag 0: Transmit buffer transmit complete interrupt is not requested. 1: Transmit buffer transmit complete interrupt is requested.
15 to 13	Reserved	When read, the value after reset is read.
12	THIF1	Channel 1 Transmit History Interrupt Status Flag 0: Transmit history interrupt is not requested. 1: Transmit history interrupt is requested.
11	CFTIF1	Channel 1 Transmit/receive FIFO Transmit Interrupt Status Flag 0: Transmit/receive FIFO transmit interrupt is not requested. 1: Transmit/receive FIFO transmit interrupt is requested.
10	TQIF1	Channel 1 Transmit Queue Interrupt Status Flag 0: Transmit queue interrupt is not requested. 1: Transmit queue interrupt is requested.
9	TAIF1	Channel 1 Transmit Buffer Abort Interrupt Status Flag 0: Transmit buffer abort interrupt is not requested. 1: Transmit buffer abort interrupt is requested.

Table 17.25 RSCAN0GTINTSTS0 Register Contents (2/2)

Bit Position	Bit Name	Function
8	TSIF1	Channel 1 Transmit Buffer Interrupt Status Flag 0: Transmit buffer transmit complete interrupt is not requested. 1: Transmit buffer transmit complete interrupt is requested.
7 to 5	Reserved	When read, the value after reset is read.
4	THIF0	Channel 0 Transmit History Interrupt Status Flag 0: Transmit history interrupt is not requested. 1: Transmit history interrupt is requested.
3	CFTIF0	Channel 0 Transmit/receive FIFO Transmit Interrupt Status Flag 0: Transmit/receive FIFO transmit interrupt is not requested. 1: Transmit/receive FIFO transmit interrupt is requested.
2	TQIF0	Channel 0 Transmit Queue Interrupt Status Flag 0: Transmit queue interrupt is not requested. 1: Transmit queue interrupt is requested.
1	TAIF0	Channel 0 Transmit Buffer Abort Interrupt Status Flag 0: Transmit buffer abort interrupt is not requested. 1: Transmit buffer abort interrupt is requested.
0	TSIF0	Channel 0 Transmit Buffer Interrupt Status Flag 0: Transmit buffer transmit complete interrupt is not requested. 1: Transmit buffer transmit complete interrupt is requested.

TSIFm Bits

The TSIFm bit is set to 1 when the TMIE bit in the RSCAN0TMIECy register is set to 1 (transmit buffer interrupt enabled) and the TMTRF[1:0] flags in the RCAN0TMSTSp register are set to 10_B (transmit completed without abort request) or 11_B (transmit completed with abort request).

When the TMTRF[1:0] flags are cleared to 00_B under the condition that the TSIFm bit can be set to 1, this flag is cleared to 0. In addition, clearing the TMIE bit to 0 also clears this flag to 0.

TAIFm Bits

The TAIFm bit is set to 1 when the TAIE bit in the RSCAN0CmCTR register is 1 (transmit abort interrupt enabled) and the TMTRF[1:0] flags in the RCAN0TMSTSp register are set to 01_B (transmit abort completed).

This flag is cleared to 0 when the TMTRF[1:0] flags are cleared to 00_B after the transmit abort is completed.

TQIFm Bits

When the TXQIE bit in the RSCAN0TXQCCm register is set to 1 (transmit queue interrupt enabled) and the TXQIF bit in the RSCAN0TXQSTSm register is set to 1 (transmit queue interrupt request), the TQIFm bit is set to 1.

When the TXQIF bit (transmit queue interrupt request) in the RSCAN0TXQSTSm register is cleared to 0, this bit is cleared to 0. This flag is also cleared to 0 when the TXQIE bit is cleared to 0.

CFTIFm Bits

When the CFTXIE bit in the RSCAN0CFCCk register is set to 1 (transmit/receive FIFO transmit interrupt enabled) and the CFTXIF bit in the RSCAN0CFSTSk register is set to 1 (transmit/receive FIFO transmit interrupt request), the CFTIFm bit is set to 1.

When the CFTXIF bit is cleared to 0 under the conditions that the CFTIFm bit can be set to 1, this bit is cleared to 0. This flag is also cleared to 0 when the CFTXIE bit is cleared to 0.

THIFm Bits

When the THLIE bit in the RSCAN0THLCCm register is set to 1 (transmit history interrupt enabled) and the THLIF bit in the RSCAN0THLSTSm register is set to 1 (transmit history interrupt request), the THIFm bit is set to 1.

When the THLIF bit in the RSCAN0THLSTSm register is cleared to 0, this bit is cleared to 0. This flag is also cleared to 0 when the THLIE bit is cleared to 0.

17.3.11 RSCAN0GTSC — Global Timestamp Counter Register

Access: RSCAN0GTSC register can be read only in 32-bit units.
RSCAN0GTSCL, RSCAN0GTSCH registers can be read only in 16-bit units.

Address: RSCAN0GTSC: <RSCAN0_base> + 0094_H

RSCAN0GTSCL: <RSCAN0_base> + 0094_H, RSCAN0GTSCH: <RSCAN0_base> + 0096_H

Value after reset: $0000\ 0000_H$

Bit	31	30	29	28	27	26	25	24	23	22	21	20	19	18	17	16
	—	—	—	—	—	—	—	—	—	—	—	—	—	—	—	—
Value after reset	0	0	0	0	0	0	0	0	0	0	0	0	0	0	0	0
R/W	R	R	R	R	R	R	R	R	R	R	R	R	R	R	R	R

Bit	15	14	13	12	11	10	9	8	7	6	5	4	3	2	1	0
	TS[15:0]															
Value after reset	0	0	0	0	0	0	0	0	0	0	0	0	0	0	0	0
R/W	R	R	R	R	R	R	R	R	R	R	R	R	R	R	R	R

Table 17.26 RSCAN0GTSC Register Contents

Bit Position	Bit Name	Function
31 to 16	Reserved	When read, the value after reset is read.
15 to 0	TS[15:0]	Timestamp Value The timestamp counter value can be read. Counter Value: 0000_H to $FFFF_H$

TS[15:0] Bits

When the TS[15:0] bits are read, the read value shows the timestamp counter (16-bit free-running counter) value at that time. When the SOF is detected, the TS[15:0] value is captured and later stored in the receive buffer or the FIFO buffer. The timestamp counter is initialized in global reset mode.

The timestamp counter starts and stops counting differently, depending on the count source.

- When the TSSS bit in the RSCAN0GCFG register is 0 (pclk):
  The timestamp counter starts counting when the RSCAN module has transitioned to global operating mode.
  This counter stops counting when the RSCAN module has transitioned to global stop mode or global test mode.
- When the TSSS bit is 1 (CANm bit time clock):
  The timestamp counter starts counting when the corresponding channel has transitioned to channel communication mode.
  This counter stops counting when the corresponding channel has transitioned to channel reset mode or channel halt mode.

17.3.12 RSCAN0GAFLECTR — Receive Rule Entry Control Register

Access: RSCAN0GAFLECTR register can be read/written in 32-bit units
RSCAN0GAFLECTRL, RSCAN0GAFLECTRH registers can be read/written in 16-bit units
RSCAN0GAFLECTRLL, RSCAN0GAFLECTRLH, RSCAN0GAFLECTRHL, RSCAN0GAFLECTRHH registers can be read/written in 8-bit units

Address: RSCAN0GAFLECTR: <RSCAN0_base> + 0098_H

RSCAN0GAFLECTRL: <RSCAN0_base> + 0098_H, RSCAN0GAFLECTRH: <RSCAN0_base> + $009A_H$

RSCAN0GAFLECTRLL: <RSCAN0_base> + 0098_H, RSCAN0GAFLECTRLH: <RSCAN0_base> + 0099_H, RSCAN0GAFLECTRHL: <RSCAN0_base> + $009A_H$, RSCAN0GAFLECTRHH: <RSCAN0_base> + $009B_H$

Value after reset: $0000\ 0000_H$

Bit	31	30	29	28	27	26	25	24	23	22	21	20	19	18	17	16
	—	—	—	—	—	—	—	—	—	—	—	—	—	—	—	—
Value after reset	0	0	0	0	0	0	0	0	0	0	0	0	0	0	0	0
R/W	R	R	R	R	R	R	R	R	R	R	R	R	R	R	R	R

Bit	15	14	13	12	11	10	9	8	7	6	5	4	3	2	1	0
	—	—	—	—	—	—	—	AFLDAE	—	—	—	AFLPN[4:0]				
Value after reset	0	0	0	0	0	0	0	0	0	0	0	0	0	0	0	0
R/W	R	R	R	R	R	R	R	R/W	R	R	R	R/W	R/W	R/W	R/W	R/W

Table 17.27 RSCAN0GAFLECTR Register Contents

Bit Position	Bit Name	Function
31 to 9	Reserved	When read, the value after reset is read. When writing, write the value after reset.
8	AFLDAE	Receive Rule Table Write Enable 0: Receive rule table write is disabled. 1: Receive rule table write is enabled.
7 to 5	Reserved	When read, the value after reset is read. When writing, write the value after reset.
4 to 0	AFLPN[4:0]	Receive Rule Table Page Number Configuration A page number can be selected from a range of page 0 (00000_B) to page 11 (01011_B).

AFLDAE Bit

Setting this bit to 0 disables the write to the receive rule table. After writes to the receive rule table are completed, set this bit to 0 to disable the write to the table. The receive rule table can be read regardless of the value of this bit.

Set the AFLDAE bit to 1 only in global reset mode.

AFLPN[4:0] Bits

These bits are used to set the page number of the receive rule table. Sixteen receive rules can be set per page.

For devices that has 2 channels, set these bits to a value within the range of 00000_B to 00111_B.

For devices that has 3 channels, set these bits to a value within the range of 00000_B to 01011_B.

17.3.13 RSCAN0GAFLCFG0 — Receive Rule Configuration Register 0

Access: RSCAN0GAFLCFG0 register can be read/written in 32-bit units
RSCAN0GAFLCFG0L, RSCAN0GAFLCFG0H registers can be read/written in 16-bit units
RSCAN0GAFLCFG0LL, RSCAN0GAFLCFG0LH, RSCAN0GAFLCFG0HL, RSCAN0GAFLCFG0HH registers can be read/written in 8-bit units

Address: RSCAN0GAFLCFG0: <RSCAN0_base> + $009C_H$

RSCAN0GAFLCFG0L: <RSCAN0_base> + $009C_H$, RSCAN0GAFLCFG0H: <RSCAN0_base> + $009E_H$

RSCAN0GAFLCFG0LL: <RSCAN0_base> + $009C_H$, RSCAN0GAFLCFG0LH: <RSCAN0_base> + $009D_H$, RSCAN0GAFLCFG0HL: <RSCAN0_base> + $009E_H$, RSCAN0GAFLCFG0HH: <RSCAN0_base> + $009F_H$

Value after reset: $0000\ 0000_H$

Bit	31	30	29	28	27	26	25	24	23	22	21	20	19	18	17	16
	RNC0[7:0]								RNC1[7:0]							
Value after reset	0	0	0	0	0	0	0	0	0	0	0	0	0	0	0	0
R/W	R/W	R/W	R/W	R/W	R/W	R/W	R/W	R/W	R/W	R/W	R/W	R/W	R/W	R/W	R/W	R/W

Bit	15	14	13	12	11	10	9	8	7	6	5	4	3	2	1	0
	RNC2[7:0]								—	—	—	—	—	—	—	—
Value after reset	0	0	0	0	0	0	0	0	0	0	0	0	0	0	0	0
R/W	R/W	R/W	R/W	R/W	R/W	R/W	R/W	R/W	R	R	R	R	R	R	R	R

Table 17.28 RSCAN0GAFLCFG0 Register Contents

Bit Position	Bit Name	Function
31 to 24	RNC0[7:0]	Number of Rules for Channel 0 Set the number of receive rules used for channel 0.
23 to 16	RNC1[7:0]	Number of Rules for Channel 1 Set the number of receive rules used for channel 1.
15 to 8	RNC2[7:0]	Number of Rules for Channel 2 Set the number of receive rules used for channel 2.
7 to 0	Reserved	When read, the value after reset is read. When writing, write the value after reset.

Modify the RSCAN0GAFLCFG0 register only in global reset mode.

Up to 64 × (number of channels) rules can be registered in the receive rule table as the entire unit. The number of receive rules per channel should meet the following conditions.

- The maximum number of rules per channel is 128.
- The total of the number of rules allocated to each channel is not larger than the number of rules that can be registered in the entire unit.

RNC0[7:0] Bits

These bits are used to set the number of rules to be registered in the channel 0 receive rule table.

Set these bits to a value within the range of 00_H to 80_H.

RNC1[7:0] Bits

These bits are used to set the number of rules to be registered in the channel 1 receive rule table.

Set these bits to a value within the range of 00_H to 80_H.

RNC2[7:0] Bits

These bits are used to set the number of rules to be registered in the channel 2 receive rule table.

Set these bits to a value within the range of 00_H to 80_H.

17.3.14 RSCAN0GAFLIDj — Receive Rule ID Register (j = 0 to 15)

Access: RSCAN0GAFLIDj register can be read/written in 32-bit units
RSCAN0GAFLIDjL, RSCAN0GAFLIDjH registers can be read/written in 16-bit units
RSCAN0GAFLIDjLL, RSCAN0GAFLIDjLH, RSCAN0GAFLIDjHL, RSCAN0GAFLIDjHH registers can be read/written in 8-bit units

Address: RSCAN0GAFLIDj: <RSCAN0_base> + 0500_H + (10_H × j)

RSCAN0GAFLIDjL: <RSCAN0_base> + 0500_H + (10_H × j),
RSCAN0GAFLIDjH: <RSCAN0_base> + 0502_H + (10_H × j)

RSCAN0GAFLIDjLL: <RSCAN0_base> + 0500_H + (10_H × j),
RSCAN0GAFLIDjLH: <RSCAN0_base> + 0501_H + (10_H × j),
RSCAN0GAFLIDjHL: <RSCAN0_base> + 0502_H + (10_H × j),
RSCAN0GAFLIDjHH: <RSCAN0_base> + 0503_H + (10_H × j)

Value after reset: $0000\ 0000_H$

Bit	31	30	29	28	27	26	25	24	23	22	21	20	19	18	17	16
	GAFLIDE	GAFLRTR	GAFLLB	GAFLID[28:16]												
Value after reset	0	0	0	0	0	0	0	0	0	0	0	0	0	0	0	0
R/W	R/W	R/W	R/W	R/W	R/W	R/W	R/W	R/W	R/W	R/W	R/W	R/W	R/W	R/W	R/W	R/W

Bit	15	14	13	12	11	10	9	8	7	6	5	4	3	2	1	0
	GAFLID[15:0]															
Value after reset	0	0	0	0	0	0	0	0	0	0	0	0	0	0	0	0
R/W	R/W	R/W	R/W	R/W	R/W	R/W	R/W	R/W	R/W	R/W	R/W	R/W	R/W	R/W	R/W	R/W

Table 17.29 RSCAN0GAFLIDj Register Contents

Bit Position	Bit Name	Function
31	GAFLIDE	IDE Select 0: Standard ID 1: Extended ID
30	GAFLRTR	RTR Select 0: Data frame 1: Remote frame
29	GAFLLB	Receive Rule Target Message Select 0: When a message transmitted from another CAN node is received 1: When the own transmitted message is received
28 to 0	GAFLID[28:0]	ID Set the ID of the receive rule. For the standard ID, set the ID in bits b10 to b0 and set bits b28 to b11 to 0.

Modify the RSCAN0GAFLIDj register when the AFLDAE bit in the RSCAN0GAFLECTR register is set to 1 (receive rule table write is enabled) in global reset mode.

GAFLIDE Bit

This bit is used to select the ID format (standard ID or extended ID) of the receive rule. This bit is compared with the IDE bit in the received message during the acceptance filter processing.

GAFLRTR Bit

This bit is used to select the frame format (data frame or remote frame) of the receive rule. This bit is compared with the RTR bit in the received message during the acceptance filter processing.

GAFLLB Bit

When this bit is set to 0, data processing using the receive rule is performed when receiving messages transmitted from another CAN node.

When this bit is set to 1 when the mirror function is used, data processing using the receive rule is performed when the CAN node is receiving its own transmitted messages.

GAFLID[28:0] Bits

These bits are used to set the ID field of the receive rule. The ID value set by these bits is compared with the ID of the received message during the acceptance filter processing.

17.3.15 RSCAN0GAFLMj — Receive Rule Mask Register (j = 0 to 15)

Access: RSCAN0GAFLMj register can be read/written in 32-bit units
RSCAN0GAFLMjL, RSCAN0GAFLMjH registers can be read/written in 16-bit units
RSCAN0GAFLMjLL, RSCAN0GAFLMjLH, RSCAN0GAFLMjHL, RSCAN0GAFLMjHH registers can be read/written in 8-bit units

Address: RSCAN0GAFLMj: <RSCAN0_base> + 0504_H + (10_H × j)

RSCAN0GAFLMjL: <RSCAN0_base> + 0504_H + (10_H × j),
RSCAN0GAFLMjH: <RSCAN0_base> + 0506_H + (10_H × j)

RSCAN0GAFLMjLL: <RSCAN0_base> + 0504_H + (10_H × j),
RSCAN0GAFLMjLH: <RSCAN0_base> + 0505_H + (10_H × j),
RSCAN0GAFLMjHL: <RSCAN0_base> + 0506_H + (10_H × j),
RSCAN0GAFLMjHH: <RSCAN0_base> + 0507_H + (10_H × j)

Value after reset: $0000\ 0000_H$

Bit	31	30	29	28	27	26	25	24	23	22	21	20	19	18	17	16
	GAFLIDEM	GAFLRTRM	—	GAFLIDM[28:16]												
Value after reset	0	0	0	0	0	0	0	0	0	0	0	0	0	0	0	0
R/W	R/W	R/W	R	R/W	R/W	R/W	R/W	R/W	R/W	R/W	R/W	R/W	R/W	R/W	R/W	R/W

Bit	15	14	13	12	11	10	9	8	7	6	5	4	3	2	1	0
	GAFLIDM[15:0]															
Value after reset	0	0	0	0	0	0	0	0	0	0	0	0	0	0	0	0
R/W	R/W	R/W	R/W	R/W	R/W	R/W	R/W	R/W	R/W	R/W	R/W	R/W	R/W	R/W	R/W	R/W

Table 17.30 RSCAN0GAFLMj Register Contents

Bit Position	Bit Name	Function
31	GAFLIDEM	IDE Mask 0: The IDE bit is not compared. 1: The IDE bit is compared.
30	GAFLRTRM	RTR Mask 0: The RTR bit is not compared. 1: The RTR bit is compared
29	Reserved	When read, the value after reset is read. When writing, write the value after reset.
28 to 0	GAFLIDM[28:0]	ID Mask 0: The corresponding ID bit is not compared. 1: The corresponding ID bit is compared.

Modify the RSCAN0GAFLMj register when the AFLDAE bit in the RSCAN0GAFLECTR register is set to 1 (receive rule table write is enabled) in global reset mode.

GAFLIDEM Bit

When this bit is set to 1, filter processing is performed only for messages of the ID format specified by the GAFLIDE bit in the RSCAN0GAFLIDj register.

When this bit is cleared to 0, the IDs of all the receive messages and the specified IDs are regarded as matched. To set the GAFLIDEM bit to 0, set the GAFLIDM[28:0] bits to all 0 at the same time.

GAFLRTRM Bit

This bit is used to mask the RTR bit of the receive rule.

GAFLIDM[28:0] Bits

These bits are used to mask the corresponding ID bit of the receive rule.

17.3.16 RSCAN0GAFLP0j — Receive Rule Pointer 0 Register (j = 0 to 15)

Access: RSCAN0GAFLP0j register can be read/written in 32-bit units
RSCAN0GAFLP0jL, RSCAN0GAFLP0jH registers can be read/written in 16-bit units
RSCAN0GAFLP0jLL, RSCAN0GAFLP0jLH, RSCAN0GAFLP0jHL, RSCAN0GAFLP0jHH registers can be read/written in 8-bit units

Address: RSCAN0GAFLP0j: <RSCAN0_base> + 0508_H + (10_H × j)

RSCAN0GAFLP0jL: <RSCAN0_base> + 0508_H + (10_H × j),
RSCAN0GAFLP0jH: <RSCAN0_base> + $050A_H$ + (10_H × j)

RSCAN0GAFLP0jLL: <RSCAN0_base> + 0508_H + (10_H × j),
RSCAN0GAFLP0jLH: <RSCAN0_base> + 0509_H + (10_H × j),
RSCAN0GAFLP0jHL: <RSCAN0_base> + $050A_H$ + (10_H × j),
RSCAN0GAFLP0jHH: <RSCAN0_base> + $050B_H$ + (10_H × j)

Value after reset: $0000\ 0000_H$

Bit	31	30	29	28	27	26	25	24	23	22	21	20	19	18	17	16
	GAFLDLC[3:0]				GAFLPTR[11:0]											
Value after reset	0	0	0	0	0	0	0	0	0	0	0	0	0	0	0	0
R/W	R/W	R/W	R/W	R/W	R/W	R/W	R/W	R/W	R/W	R/W	R/W	R/W	R/W	R/W	R/W	R/W

Bit	15	14	13	12	11	10	9	8	7	6	5	4	3	2	1	0
	GAFLRVM	GAFLRMDP[6:0]							—	—	—	—	—	—	—	—
Value after reset	0	0	0	0	0	0	0	0	0	0	0	0	0	0	0	0
R/W	R/W	R/W	R/W	R/W	R/W	R/W	R/W	R/W	R	R	R	R	R	R	R	R

Table 17.31 RSCAN0GAFLP0j Register Contents

Bit Position	Bit Name	Function
31 to 28	GAFLDLC[3:0]	Receive Rule DLC b31 b30 b29 b28 0 0 0 0: DLC check is disabled. 0 0 0 1: 1 data byte 0 0 1 0: 2 data bytes 0 0 1 1: 3 data bytes 0 1 0 0: 4 data bytes 0 1 0 1: 5 data bytes 0 1 1 0: 6 data bytes 0 1 1 1: 7 data bytes 1 X X X: 8 data bytes
27 to 16	GAFLPTR[11:0]	Receive Rule Label Set the 12-bit label information.
15	GAFLRMV	Receive Buffer Enable 0: No receive buffer is used. 1: A receive buffer is used.
14 to 8	GAFLRMDP[6:0]	Receive Buffer Number Select Set the receive buffer number to store receive messages.
7 to 0	Reserved	When read, the value after reset is read. When writing, write the value after reset.

Modify the RSCAN0GAFLP0j register when the AFLDAE bit in the RSCAN0GAFLECTR register is set to 1 (receive rule table write is enabled) in global reset mode.

GAFLDLC[3:0] Bits

These bits are used to set the minimum data length necessary for receiving messages. If the data length of a message that is being filtered is equal to or larger than the value set by the GAFLDLC[3:0] bits, the message passes the DLC check. Setting these bits to 0000_B disables the DLC check function allowing messages with any data length to pass the DLC check.

GAFLPTR[11:0] Bits

These bits are used to set a 12-bit label to be attached to messages that have passed through the filter. A label is attached when a message is stored in the receive buffer or the FIFO buffer.

GAFLRMV Bit

When this bit is set to 1, receive messages that have passed through the filter are stored in the receive buffer selected by the GAFLRMDP[6:0] bits.

GAFLRMDP[6:0] Bits

These bits are used to select the number of the receive buffer that stores receive messages that have passed through the filter when the GAFLRMV bit is set to 1. Set these bits to a value smaller than the value set by the NRXMB[7:0] bits in the RSCAN0RMNB register.

17.3.17 RSCAN0GAFLP1j — Receive Rule Pointer 1 Register (j = 0 to 15)

Access: RSCAN0GAFLP1j register can be read/written in 32-bit units
RSCAN0GAFLP1jL, RSCAN0GAFLP1jH registers can be read/written in 16-bit units
RSCAN0GAFLP1jLL, RSCAN0GAFLP1jLH, RSCAN0GAFLP1jHL, RSCAN0GAFLP1jHH registers can be read/written in 8-bit units

Address: RSCAN0GAFLP1j: <RSCAN0_base> + $050C_H$ + (10_H × j)

RSCAN0GAFLP1jL: <RSCAN0_base> + $050C_H$ + (10_H × j),
RSCAN0GAFLP1jH: <RSCAN0_base> + $050E_H$ + (10_H × j)

RSCAN0GAFLP1jLL: <RSCAN0_base> + $050C_H$ + (10_H × j),
RSCAN0GAFLP1jLH: <RSCAN0_base> + $050D_H$ + (10_H × j),
RSCAN0GAFLP1jHL: <RSCAN0_base> + $050E_H$ + (10_H × j),
RSCAN0GAFLP1jHH: <RSCAN0_base> + $050F_H$ + (10_H × j)

Value after reset: $0000\ 0000_H$

Bit	31	30	29	28	27	26	25	24	23	22	21	20	19	18	17	16
	—	—	—	—	—	—	—	—	—	—	—	—	—	—	—	GAFLFDP16
Value after reset	0	0	0	0	0	0	0	0	0	0	0	0	0	0	0	0
R/W	R	R	R	R	R	R	R	R	R	R	R	R	R	R	R	R/W

Bit	15	14	13	12	11	10	9	8	7	6	5	4	3	2	1	0
	GAFLFDP[15:0]															
Value after reset	0	0	0	0	0	0	0	0	0	0	0	0	0	0	0	0
R/W	R/W	R/W	R/W	R/W	R/W	R/W	R/W	R/W	R/W	R/W	R/W	R/W	R/W	R/W	R/W	R/W

Table 17.32 RSCAN0GAFLP1j Register Contents

Bit Position	Bit Name	Function
31 to 17	Reserved	When read, the value after reset is read. When writing, write the value after reset.
16 to 8	GAFLFDP [16:8]	Transmit/Receive FIFO Buffer k Select (Bit position –8 = target transmit/receive FIFO buffer number k) 0: Transmit/receive FIFO buffer is not selected. 1: Transmit/receive FIFO buffer is selected.
7 to 0	GAFLFDP[7:0]	Receive FIFO Buffer x Select (Bit position = target receive FIFO buffer number x) 0: Receive FIFO buffer is not selected. 1: Receive FIFO buffer is selected.

Modify the RSCAN0GAFLP1j register when the AFLDAE bit in the RSCAN0GAFLECTR register is set to 1 (receive rule table write is enabled) in global reset mode.

GAFLFDP [16:0] Bits

These bits are used to specify FIFO buffers that store receive messages that have passed through the filter. Up to eight FIFO buffers are selectable. However, when the GAFLRMV bit in the RSCAN0GAFLP0j register is set to 1 (a message is stored in the receive buffer), up to seven FIFO buffers can be selected. Only receive FIFO buffers and the transmit/receive FIFO buffer for which the CFM[1:0] bits in the RSCAN0CFCCk register are set to 00_B (receive mode) or 10_B (gateway mode) are selectable.

Only GAFLFDP[13:0] bits are valid for devices that have 2 channels. When writing to GAFLFDP[16:14], write the value after reset.

17.3.18 RSCAN0RMNB — Receive Buffer Number Register

Access: RSCAN0RMNB register can be read/written in 32-bit units
RSCAN0RMNBL, RSCAN0RMNBH registers can be read/written in 16-bit units
RSCAN0RMNBLL, RSCAN0RMNBLH, RSCAN0RMNBHL, RSCAN0RMNBHH registers can be read/written in 8-bit units

Address: RSCAN0RMNB: <RSCAN0_base> + $00A4_H$

RSCAN0RMNBL: <RSCAN0_base> + $00A4_H$, RSCAN0RMNBH: <RSCAN0_base> + $00A6_H$

RSCAN0RMNBLL: <RSCAN0_base> + $00A4_H$, RSCAN0RMNBLH: <RSCAN0_base> + $00A5_H$,
RSCAN0RMNBHL: <RSCAN0_base> + $00A6_H$, RSCAN0RMNBHH: <RSCAN0_base> + $00A7_H$

Value after reset: $0000\ 0000_H$

Bit	31	30	29	28	27	26	25	24	23	22	21	20	19	18	17	16
	—	—	—	—	—	—	—	—	—	—	—	—	—	—	—	—
Value after reset	0	0	0	0	0	0	0	0	0	0	0	0	0	0	0	0
R/W	R	R	R	R	R	R	R	R	R	R	R	R	R	R	R	R

Bit	15	14	13	12	11	10	9	8	7	6	5	4	3	2	1	0
	—	—	—	—	—	—	—	—	NRXMB[7:0]							
Value after reset	0	0	0	0	0	0	0	0	0	0	0	0	0	0	0	0
R/W	R	R	R	R	R	R	R	R	R/W	R/W	R/W	R/W	R/W	R/W	R/W	R/W

Table 17.33 RSCAN0RMNB Register Contents

Bit Position	Bit Name	Function
31 to 8	Reserved	When read, the value after reset is read. When writing, write the value after reset.
7 to 0	NRXMB[7:0]	Receive Buffer Number Configuration Set the number of receive buffers. Set a value of 0 to 48.

Modify the RSCAN0RMNB register only in global reset mode.

NRXMB[7:0] Bits

These bits are used to set the total number of receive buffers of the RS-CAN module. The maximum value is 16 × (number of channels).

Setting these bits all to 0 makes receive buffers unavailable.

17.3.19 RSCAN0RMNDy — Reception Buffer New Data Register y (y = 0, 1)

Access: RSCAN0RMNDy register can be read/written in 32-bit units
RSCAN0RMNDyL and RSCAN0RMNDyH registers can be read/written in 16-bit units
RSCAN0RMNDyLL, RSCAN0RMNDyLH, RSCAN0RMNDyHL, and RSCAN0RMNDyHH registers can be read/written in 8-bit units

Address: RSCAN0RMNDy: <RSCAN0_base> + $00A8_H$ + (y × 0004_H)

RSCAN0RMNDyL: <RSCAN0_base> + $00A8_H$ + (y × 0004_H),
RSCAN0RMNDyH: <RSCAN0_base> + $00AA_H$ + (y × 0004_H)

RSCAN0RMNDyLL: <RSCAN0_base> + $00A8_H$ + (y × 0004_H),
RSCAN0RMNDyLH: <RSCAN0_base> + $00A9_H$ + (y × 0004_H),
RSCAN0RMNDyHL: <RSCAN0_base> + $00AA_H$ + (y × 0004_H),
RSCAN0RMNDyHH: <RSCAN0_base> + $00AB_H$ + (y × 0004_H)

Value after reset: $0000\ 0000_H$

Bit	31	30	29	28	27	26	25	24	23	22	21	20	19	18	17	16
	RMNSq (q = y × 32 + 31 to y × 32 + 16 (y = 0))															
Value after reset	0	0	0	0	0	0	0	0	0	0	0	0	0	0	0	0
R/W	R/W	R/W	R/W	R/W	R/W	R/W	R/W	R/W	R/W	R/W	R/W	R/W	R/W	R/W	R/W	R/W

Bit	15	14	13	12	11	10	9	8	7	6	5	4	3	2	1	0
	RMNSq (q = y × 32 + 15 to y × 32 + 0 (y = 0, 1))															
Value after reset	0	0	0	0	0	0	0	0	0	0	0	0	0	0	0	0
R/W	R/W	R/W	R/W	R/W	R/W	R/W	R/W	R/W	R/W	R/W	R/W	R/W	R/W	R/W	R/W	R/W

Table 17.34 RSCAN0RMNDy Register Contents

Bit Position	Bit Name	Function
31 to 16	RMNSq	Receive Buffer Receive Complete Flag q (q = y × 32 + 31 to y × 32 + 16) 0: There is no new message in receive buffer q. 1: There is a new message in receive buffer q. When y = 1, however, these bits are reserved. When read, the value after reset is read. When writing, write the value after reset.
15 to 0	RMNSq	Receive Buffer Receive Complete Flag q (q = y × 32 + 15 to y × 32 + 0) 0: There is no new message in receive buffer q. 1: There is a new message in receive buffer q.

Write 0 to the RSCAN0RMNDy register in global operating mode or global test mode.

RMNSq Flags (q = 0 to 47)

Each RMNS flag is set to 1 when the processing for storing a message in the corresponding receive buffer starts.

To clear a flag to 0, the program must write 0 to the flag. Use a store instruction to write “0” to the flag and “1” to other flags. These bits cannot be set to 0 while a message is being stored. It takes ten clock cycles of pclk to store a message.

These flags are cleared to 0 in global reset mode.

CAUTION

q = 0 to 31 for devices that have 2 channels.

17.3.20 RSCAN0RMIDq — Receive Buffer ID Register (q = 0 to 47)*

CAUTION

q = 0 to 31 for devices that have 2 channels.

Access: RSCAN0RMIDq register can be read only in 32-bit units
RSCAN0RMIDqL, RSCAN0RMIDqH registers can be read only in 16-bit units
RSCAN0RMIDqLL, RSCAN0RMIDqLH, RSCAN0RMIDqHL, RSCAN0RMIDqHH registers can be read only in 8-bit units

Address: RSCAN0RMIDq: <RSCAN0_base> + 0600_H + (10_H × q)

RSCAN0RMIDqL: <RSCAN0_base> + 0600_H + (10_H × q),
RSCAN0RMIDqH: <RSCAN0_base> + 0602_H + (10_H × q)

RSCAN0RMIDqLL: <RSCAN0_base> + 0600_H + (10_H × q),
RSCAN0RMIDqLH: <RSCAN0_base> + 0601_H + (10_H × q),
RSCAN0RMIDqHL: <RSCAN0_base> + 0602_H + (10_H × q),
RSCAN0RMIDqHH: <RSCAN0_base> + 0603_H + (10_H × q)

Value after reset: $0000\ 0000_H$

Bit	31	30	29	28	27	26	25	24	23	22	21	20	19	18	17	16
	RMIDE	RMRTR	—	RMID[28:16]												
Value after reset	0	0	0	0	0	0	0	0	0	0	0	0	0	0	0	0
R/W	R	R	R	R	R	R	R	R	R	R	R	R	R	R	R	R

Bit	15	14	13	12	11	10	9	8	7	6	5	4	3	2	1	0
	RMID[15:0]															
Value after reset	0	0	0	0	0	0	0	0	0	0	0	0	0	0	0	0
R/W	R	R	R	R	R	R	R	R	R	R	R	R	R	R	R	R

Table 17.35 RSCAN0RMIDq Register Contents

Bit Position	Bit Name	Function
31	RMIDE	Receive Buffer IDE 0: Standard ID 1: Extended ID
30	RMRTR	Receive Buffer RTR 0: Data frame 1: Remote frame
29	Reserved	When read, the value after reset is read.
28 to 0	RMID[28:0]	Receive Buffer ID Data These bits contain the standard ID or extended ID of the received message. Read bits b10 to b0 for standard ID. Bits b28 to b11 are read as 0.

RMIDE Bit

This bit indicates the ID format (standard ID or extended ID) of the message stored in the receive buffer.

RMRTR Bit

This bit indicates the frame format (data frame or remote frame) of the message stored in the receive buffer.

RMID[28:0] Bits

These bits contain the ID of the message stored in the receive buffer.

17.3.21 RSCAN0RMPTRq — Receive Buffer Pointer Register (q = 0 to 47)*

CAUTION

q = 0 to 31 for devices that have 2 channels.

Access: RSCAN0RMPTRq register can be read only in 32-bit units
RSCAN0RMPTRqL, RSCAN0RMPTRqH registers can be read only in 16-bit units
RSCAN0RMPTRqLL, RSCAN0RMPTRqLH, RSCAN0RMPTRqHL, RSCAN0RMPTRqHH registers can be read only in 8-bit units

Address: RSCAN0RMPTRq: <RSCAN0_base> + 0604_H + (10_H × q)

RSCAN0RMPTRqL: <RSCAN0_base> + 0604_H + (10_H × q),
RSCAN0RMPTRqH: <RSCAN0_base> + 0606_H + (10_H × q)

RSCAN0RMPTRqLL: <RSCAN0_base> + 0604_H + (10_H × q),
RSCAN0RMPTRqLH: <RSCAN0_base> + 0605_H + (10_H × q),
RSCAN0RMPTRqHL: <RSCAN0_base> + 0606_H + (10_H × q),
RSCAN0RMPTRqHH: <RSCAN0_base> + 0607_H + (10_H × q)

Value after reset: $0000\ 0000_H$

Bit	31	30	29	28	27	26	25	24	23	22	21	20	19	18	17	16
	RMDLC[3:0]				RMPTR[11:0]											
Value after reset	0	0	0	0	0	0	0	0	0	0	0	0	0	0	0	0
R/W	R	R	R	R	R	R	R	R	R	R	R	R	R	R	R	R

Bit	15	14	13	12	11	10	9	8	7	6	5	4	3	2	1	0
	RMTS[15:0]															
Value after reset	0	0	0	0	0	0	0	0	0	0	0	0	0	0	0	0
R/W	R	R	R	R	R	R	R	R	R	R	R	R	R	R	R	R

Table 17.36 RSCAN0RMPTRq Register Contents

Bit Position	Bit Name	Function
31 to 28	RMDLC[3:0]	Receive Buffer DLC Data b31 b30 b29 b28 0 0 0 0: No data byte 0 0 0 1: 1 data byte 0 0 1 0: 2 data bytes 0 0 1 1: 3 data bytes 0 1 0 0: 4 data bytes 0 1 0 1: 5 data bytes 0 1 1 0: 6 data bytes 0 1 1 1: 7 data bytes 1 X X X: 8 data bytes
27 to 16	RMPTR[11:0]	Receive Buffer Label Data Label information of the received message.
15 to 0	RMTS[15:0]	Receive Buffer Timestamp Data Timestamp value of the received message.

RMDLC[3:0] Bits

These bits indicate the data length of the message stored in the receive buffer.

RMPTR[11:0] Bits

These bits indicate the label information of the message stored in the receive buffer.

RMTS[15:0] Bits

These bits indicate the timestamp value of the message stored in the receive buffer.

17.3.22 RSCAN0RMDF0q — Receive Buffer Data Field 0 Register (q = 0 to 47)*

CAUTION

q = 0 to 31 for devices that have 2 channels.

Access: RSCAN0RMDF0q register can be read only in 32-bit units
RSCAN0RMDF0qL, RSCAN0RMDF0qH registers can be read only in 16-bit units
RSCAN0RMDF0qLL, RSCAN0RMDF0qLH, RSCAN0RMDF0qHL, RSCAN0RMDF0qHH registers can be read only in 8-bit units

Address: RSCAN0RMDF0q: <RSCAN0_base> + 0608_H + (10_H × q)

RSCAN0RMDF0qL: <RSCAN0_base> + 0608_H + (10_H × q),
RSCAN0RMDF0qH: <RSCAN0_base> + $060A_H$ + (10_H × q)

RSCAN0RMDF0qLL: <RSCAN0_base> + 0608_H + (10_H × q),
RSCAN0RMDF0qLH: <RSCAN0_base> + 0609_H + (10_H × q),
RSCAN0RMDF0qHL: <RSCAN0_base> + $060A_H$ + (10_H × q),
RSCAN0RMDF0qHH: <RSCAN0_base> + $060B_H$ + (10_H × q)

Value after reset: $0000\ 0000_H$

Bit	31	30	29	28	27	26	25	24	23	22	21	20	19	18	17	16
	RMDB3[7:0]								RMDB2[7:0]							
Value after reset	0	0	0	0	0	0	0	0	0	0	0	0	0	0	0	0
R/W	R	R	R	R	R	R	R	R	R	R	R	R	R	R	R	R

Bit	15	14	13	12	11	10	9	8	7	6	5	4	3	2	1	0
	RMDB1[7:0]								RMDB0[7:0]							
Value after reset	0	0	0	0	0	0	0	0	0	0	0	0	0	0	0	0
R/W	R	R	R	R	R	R	R	R	R	R	R	R	R	R	R	R

Table 17.37 RSCAN0RMDF0q Register Contents

Bit Position	Bit Name	Function
31 to 24	RMDB3[7:0]	Receive Buffer Data Byte 3
23 to 16	RMDB2[7:0]	Receive Buffer Data Byte 2
15 to 8	RMDB1[7:0]	Receive Buffer Data Byte 1
7 to 0	RMDB0[7:0]	Receive Buffer Data Byte 0 Data for a message stored in the receive buffer can be read.

When the RMDLC[3:0] value in the RSCAN0RMPTRq register is smaller than 1000_B, data bytes for which no data is set are read as 00_H.

17.3.23 RSCAN0RMDF1q — Receive Buffer Data Field 1 Register (q = 0 to 47)*

CAUTION

q = 0 to 31 for devices that have 2 channels.

Access: RSCAN0RMDF1q register can be read only in 32-bit units
RSCAN0RMDF1qL, RSCAN0RMDF1qH register can be read only in 16-bit units
RSCAN0RMDF1qLL, RSCAN0RMDF1qLH, RSCAN0RMDF1qHL, RSCAN0RMDF1qHH registers can be read only in 8-bit units

Address: RSCAN0RMDF1q: <RSCAN0_base> + $060C_H$ + (10_H × q)

RSCAN0RMDF1qL: <RSCAN0_base> + $060C_H$ + (10_H × q),
RSCAN0RMDF1qH: <RSCAN0_base> + $060E_H$ + (10_H × q)

RSCAN0RMDF1qLL: <RSCAN0_base> + $060C_H$ + (10_H × q),
RSCAN0RMDF1qLH: <RSCAN0_base> + $060D_H$ + (10_H × q),
RSCAN0RMDF1qHL: <RSCAN0_base> + $060E_H$ + (10_H × q),
RSCAN0RMDF1qHH: <RSCAN0_base> + $060F_H$ + (10_H × q)

Value after reset: $0000\ 0000_H$

Bit	31	30	29	28	27	26	25	24	23	22	21	20	19	18	17	16
	RMDB7[7:0]								RMDB6[7:0]							
Value after reset	0	0	0	0	0	0	0	0	0	0	0	0	0	0	0	0
R/W	R	R	R	R	R	R	R	R	R	R	R	R	R	R	R	R

Bit	15	14	13	12	11	10	9	8	7	6	5	4	3	2	1	0
	RMDB5[7:0]								RMDB4[7:0]							
Value after reset	0	0	0	0	0	0	0	0	0	0	0	0	0	0	0	0
R/W	R	R	R	R	R	R	R	R	R	R	R	R	R	R	R	R

Table 17.38 RSCAN0RMDF1q Register Contents

Bit Position	Bit Name	Function
31 to 24	RMDB7[7:0]	Receive Buffer Data Byte 7
23 to 16	RMDB6[7:0]	Receive Buffer Data Byte 6
15 to 8	RMDB5[7:0]	Receive Buffer Data Byte 5
7 to 0	RMDB4[7:0]	Receive Buffer Data Byte 4 Data for a message stored in the receive buffer can be read.

When the RMDLC[3:0] value in the RSCAN0RMPTRq register is smaller than 1000_B, data bytes for which no data is set are read as 00_H.

17.3.24 RSCAN0RFCCx — Receive FIFO Buffer Configuration and Control Register (x = 0 to 7)

Access: RSCAN0RFCCx register can be read/written in 32-bit units
RSCAN0RFCCxL, RSCAN0RFCCxH registers can be read/written in 16-bit units
RSCAN0RFCCxLL, RSCAN0RFCCxLH, RSCAN0RFCCxHL, RSCAN0RFCCxHH registers can be read/written in 8-bit units

Address: RSCAN0RFCCx: <RSCAN0_base> + $00B8_H$ + (04_H × x)

RSCAN0RFCCxL: <RSCAN0_base> + $00B8_H$ + (04_H × x),
RSCAN0RFCCxH: <RSCAN0_base> + $00BA_H$ + (04_H × x)

RSCAN0RFCCxLL: <RSCAN0_base> + $00B8_H$ + (04_H × x),
RSCAN0RFCCxLH: <RSCAN0_base> + $00B9_H$ + (04_H × x),
RSCAN0RFCCxHL: <RSCAN0_base> + $00BA_H$ + (04_H × x),
RSCAN0RFCCxHH: <RSCAN0_base> + $00BB_H$ + (04_H × x)

Value after reset: $0000\ 0000_H$

Bit	31	30	29	28	27	26	25	24	23	22	21	20	19	18	17	16
	—	—	—	—	—	—	—	—	—	—	—	—	—	—	—	—
Value after reset	0	0	0	0	0	0	0	0	0	0	0	0	0	0	0	0
R/W	R	R	R	R	R	R	R	R	R	R	R	R	R	R	R	R

Bit	15	14	13	12	11	10	9	8	7	6	5	4	3	2	1	0
	RFIGCV[2:0]			RFIM	—	RFDC[2:0]			—	—	—	—	—	—	RFIE	RFE
Value after reset	0	0	0	0	0	0	0	0	0	0	0	0	0	0	0	0
R/W	R/W	R/W	R/W	R/W	R	R/W	R/W	R/W	R	R	R	R	R	R	R/W	R/W

Table 17.39 RSCAN0RFCCx Register Contents (1/2)

Bit Position	Bit Name	Function
31 to 16	Reserved	When read, the value after reset is read. When writing, write the value after reset.
15 to 13	RFIGCV[2:0]	Receive FIFO Interrupt Request Timing Select b15 b14 b13 0 0 0: When FIFO is 1/8 full. 0 0 1: When FIFO is 2/8 full. 0 1 0: When FIFO is 3/8 full. 0 1 1: When FIFO is 4/8 full. 1 0 0: When FIFO is 5/8 full. 1 0 1: When FIFO is 6/8 full. 1 1 0: When FIFO is 7/8 full. 1 1 1: When FIFO is full.
12	RFIM	Receive FIFO Interrupt Source Select 0: An interrupt occurs when the condition set by the RFIGCV[2:0] bits is met. 1: An interrupt occurs each time a message has been received.
11	Reserved	When read, the value after reset is read. When writing, write the value after reset.
10 to 8	RFDC[2:0]	Receive FIFO Buffer Depth Configuration b10 b9 b8 0 0 0: 0 messages 0 0 1: 4 messages 0 1 0: 8 messages 0 1 1: 16 messages 1 0 0: 32 messages 1 0 1: 48 messages 1 1 0: 64 messages 1 1 1: 128 messages
7 to 2	Reserved	When read, the value after reset is read. When writing, write the value after reset.

Table 17.39 RSCAN0RFCCx Register Contents (2/2)

Bit Position	Bit Name	Function
1	RFIE	Receive FIFO Interrupt Enable 0: Receive FIFO interrupt is disabled. 1: Receive FIFO interrupt is enabled.
0	RFE	Receive FIFO Buffer Enable 0: No receive FIFO buffer is used. 1: Receive FIFO buffers are used.

RFIGCV[2:0] Bits

These bits are used to select the timing for the generation of receive FIFO interrupt requests when the RFIM bit is clear (0). An interrupt request is generated when the number of the messages stored in the buffer reaches the fraction specified in these bits of the number of the messages for storage (specified in the RFDC[2:0] bits).

When the RFDC[2:0] bits are set to 001_B (4 messages), set the RFIGCV[2:0] bits to 001_B, 011_B, 101_B, or 111_B. Modify these bits only in global reset mode.

RFIM Bit

This bit is used to select a FIFO interrupt source. Modify this bit only in global reset mode.

RFDC[2:0] Bits

These bits are used to select the number of messages that can be stored in a single receive FIFO buffer. When these bits are set to 000_B, no receive FIFO buffer should be used. Modify these bits only in global reset mode.

RFIE Bit

Setting the RFIE bit to 1 enables receive FIFO interrupts. Modify this bit when the RFE bit set to 0 (no receive FIFO buffer is used).

RFE Bit

Setting the RFE bit to 1 makes receive FIFO buffers available. Clearing this bit to 0 sets the RFEMP flag in the RSCAN0RFSTSx register to 1 (buffer empty). Modify this bit in global operating mode or global test mode.

17.3.25 RSCAN0RFSTSx — Receive FIFO Buffer Status Register (x = 0 to 7)

Access: RSCAN0RFSTSx register can be read/written in 32-bit units
RSCAN0RFSTSxL, RSCAN0RFSTSxH registers can be read/written in 16-bit units
RSCAN0RFSTSxLL, RSCAN0RFSTSxLH, RSCAN0RFSTSxHL, RSCAN0RFSTSxHH registers can be read/written in 8-bit units

Address: RSCAN0RFSTSx: <RSCAN0_base> + $00D8_H$ + (04_H × x)

RSCAN0RFSTSxL: <RSCAN0_base> + $00D8_H$ + (04_H × x),
RSCAN0RFSTSxH: <RSCAN0_base> + $00DA_H$ + (04_H × x)

RSCAN0RFSTSxLL: <RSCAN0_base> + $00D8_H$ + (04_H × x),
RSCAN0RFSTSxLH: <RSCAN0_base> + $00D9_H$ + (04_H × x),
RSCAN0RFSTSxHL: <RSCAN0_base> + $00DA_H$ + (04_H × x),
RSCAN0RFSTSxHH: <RSCAN0_base> + $00DB_H$ + (04_H × x)

Value after reset: $0000\ 0001_H$

Bit	31	30	29	28	27	26	25	24	23	22	21	20	19	18	17	16
	—	—	—	—	—	—	—	—	—	—	—	—	—	—	—	—
Value after reset	0	0	0	0	0	0	0	0	0	0	0	0	0	0	0	0
R/W	R	R	R	R	R	R	R	R	R	R	R	R	R	R	R	R

Bit	15	14	13	12	11	10	9	8	7	6	5	4	3	2	1	0
	RFMC[7:0]								—	—	—	—	RFIF	RFMLT	RFFLL	RFEMP
Value after reset	0	0	0	0	0	0	0	0	0	0	0	0	0	0	0	1
R/W	R	R	R	R	R	R	R	R	R	R	R	R	R/W*1	R/W*1	R	R

Note 1. The only effective value for writing to this flag bit is 0, which clears the bit. Otherwise writing to the bit results in retention of its state.

Table 17.40 RSCAN0RFSTSx Register Contents

Bit Position	Bit Name	Function
31 to 16	Reserved	When read, the value after reset is read. When writing, write the value after reset.
15 to 8	RFMC[7:0]	Receive FIFO Unread Message Counter The number of unread messages stored in the receive FIFO buffer is displayed.
7 to 4	Reserved	When read, the value after reset is read. When writing, write the value after reset.
3	RFIF	Receive FIFO Interrupt Request Flag 0: No receive FIFO interrupt request is present. 1: A receive FIFO interrupt request is present.
2	RFMLT	Receive FIFO Message Lost Flag 0: No receive FIFO message is lost. 1: A receive FIFO message is lost.
1	RFFLL	Receive FIFO Buffer Full Status Flag 0: The receive FIFO buffer is not full. 1: The receive FIFO buffer is full.
0	RFEMP	Receive FIFO Buffer Empty Status Flag 0: The receive FIFO buffer contains unread message. 1: The receive FIFO buffer contains no unread message (buffer empty).

RFMC[7:0]

These flags indicate the number of unread messages in the receive FIFO buffer. These flags become 00_H when the RFE bit in the RSCAN0RFCCx register is set to 0.

RFIF Flag

This flag is set to 1 when the receive FIFO interrupt request generation conditions set by the RFIGCV[2:0] bits and the RFIM bit in the RSCAN0RFCCx register are met. This flag is cleared to 0 in global reset mode or by writing 0 to this flag. Modify this bit in global operating mode or global test mode.
To clear the flags of the register to 0, the program must write 0 to the corresponding flag to be cleared. When writing 0, using a store instruction, set the bit to be set to “0” to “0”, and the bits not to be set to “0” to “1”.

RFMLT Flag

This flag is set to 1 when an attempt is made to store a new message while the receive FIFO buffer is full. In this case, the new message is discarded.

This flag is cleared to 0 in global reset mode or by writing 0 to this flag.

Modify this bit in global operating mode or global test mode.

To clear the flags of the register to 0, the program must write 0 to the corresponding flag to be cleared. When writing 0, using a store instruction, set the bit to be set to “0” to “0”, and the bits not to be set to “0” to “1”.

RFFLL Flag

This flag is set to 1 when the number of messages stored in the receive FIFO buffer matches the FIFO buffer depth set by the RFDC[2:0] bits in the RSCAN0RFCCx register.

If the number of messages stored in the receive FIFO buffer becomes smaller than the FIFO buffer depth set by the RFDC[2:0] bits, this flag is cleared to 0. This flag is also cleared to 0 when the RFE bit in the RSCAN0RFCCx register is set to 0 (no receive FIFO buffer is used) or in global reset mode.

RFEMP Flag

This flag is set to 1 when all messages in the receive FIFO buffer have been read. This flag is also set to 1 when the RFE bit in the RSCAN0RFCCx register is 0 or in global reset mode.

This flag is cleared to 0 when even a single received message has been stored in the receive FIFO buffer.

NOTE

To clear the RFMLT or RFIF flag to 0, use a store instruction to write “0” to the given flag and “1” to the other flags.

17.3.26 RSCAN0RFPCTRx — Receive FIFO Buffer Pointer Control Register (x = 0 to 7)

Access: RSCAN0RFPCTRx register can only be written in 32-bit units
RSCAN0RFPCTRxL, RSCAN0RFPCTRxH registers can only be written in 16-bit units
RSCAN0RFPCTRxLL, RSCAN0RFPCTRxLH, RSCAN0RFPCTRxHL, RSCAN0RFPCTRxHH registers can only be written in 8-bit units

Address: RSCAN0RFPCTRx: <RSCAN0_base> + $00F8_H$ + (04_H × x)

RSCAN0RFPCTRxL: <RSCAN0_base> + $00F8_H$ + (04_H × x),
RSCAN0RFPCTRxH: <RSCAN0_base> + $00FA_H$ + (04_H × x)

RSCAN0RFPCTRxLL: <RSCAN0_base> + $00F8_H$ + (04_H × x),
RSCAN0RFPCTRxLH: <RSCAN0_base> + $00F9_H$ + (04_H × x),
RSCAN0RFPCTRxHL: <RSCAN0_base> + $00FA_H$ + (04_H × x),
RSCAN0RFPCTRxHH: <RSCAN0_base> + $00FB_H$ + (04_H × x)

Value after reset: $0000\ 0000_H$

Bit	31	30	29	28	27	26	25	24	23	22	21	20	19	18	17	16
	—	—	—	—	—	—	—	—	—	—	—	—	—	—	—	—
Value after reset	0	0	0	0	0	0	0	0	0	0	0	0	0	0	0	0
R/W	R	R	R	R	R	R	R	R	R	R	R	R	R	R	R	R

Bit	15	14	13	12	11	10	9	8	7	6	5	4	3	2	1	0
	—	—	—	—	—	—	—	—	RFPC[7:0]							
Value after reset	0	0	0	0	0	0	0	0	0	0	0	0	0	0	0	0
R/W	R	R	R	R	R	R	R	R	W	W	W	W	W	W	W	W

Table 17.41 RSCAN0RFPCTRx Register Contents

Bit Position	Bit Name	Function
31 to 8	Reserved	When read, the value after reset is returned. When writing, write the value after reset.
7 to 0	RFPC[7:0]	Receive FIFO Pointer Control When these bits are set to FF_H, the read pointer moves to the next unread message in the receive FIFO buffer.

RFPC[7:0] Bits

When the RFPC[7:0] bits are set to FF_H, the read pointer moves to the next unread message in the receive FIFO buffer. At this time, the RFMC[7:0] (receive FIFO unread message counter) value in the RSCAN0RFSTSx register is decremented. Read the RSCAN0RFID, RSCAN0RFPTR, RSCAN0RFDF0, and RSCAN0RFDF1 registers to read messages in the receive FIFO buffer, and then write FF_H to the RFPC[7:0] bits.

When writing FF_H to these bits, make sure that the RFE bit in the RSCAN0RFCCx register is set to 1 (receive FIFO buffers are used) and the RFEMP flag in the RSCAN0RFSTSx register is 0 (the receive FIFO buffer contains unread messages).

17.3.27 RSCAN0RFIDx — Receive FIFO Buffer Access ID Register (x = 0 to 7)

Access: RSCAN0RFIDx register can be read only in 32-bit units
RSCAN0RFIDxL, RSCAN0RFIDxH registers can be read only in 16-bit units
RSCAN0RFIDxLL, RSCAN0RFIDxLH, RSCAN0RFIDxHL, RSCAN0RFIDxHH registers can be read only in 8-bit units

Address: RSCAN0RFIDx: <RSCAN0_base> + $0E00_H$ + (10_H × x)

RSCAN0RFIDxL: <RSCAN0_base> + $0E00_H$ + (10_H × x),
RSCAN0RFIDxH: <RSCAN0_base> + $0E02_H$ + (10_H × x)

RSCAN0RFIDxLL: <RSCAN0_base> + $0E00_H$ + (10_H × x),
RSCAN0RFIDxLH: <RSCAN0_base> + $0E01_H$ + (10_H × x),
RSCAN0RFIDxHL: <RSCAN0_base> + $0E02_H$ + (10_H × x),
RSCAN0RFIDxHH: <RSCAN0_base> + $0E03_H$ + (10_H × x)

Value after reset: $0000\ 0000_H$

Bit	31	30	29	28	27	26	25	24	23	22	21	20	19	18	17	16
	RFIDE	RFRTR	—	RFID[28:16]												
Value after reset	0	0	0	0	0	0	0	0	0	0	0	0	0	0	0	0
R/W	R	R	R	R	R	R	R	R	R	R	R	R	R	R	R	R

Bit	15	14	13	12	11	10	9	8	7	6	5	4	3	2	1	0
	RFID[15:0]															
Value after reset	0	0	0	0	0	0	0	0	0	0	0	0	0	0	0	0
R/W	R	R	R	R	R	R	R	R	R	R	R	R	R	R	R	R

Table 17.42 RSCAN0RFIDx Register Contents

Bit Position	Bit Name	Function
31	RFIDE	Receive FIFO Buffer IDE 0: Standard ID 1: Extended ID
30	RFRTR	Receive FIFO Buffer RTR 0: Data frame 1: Remote frame
29	Reserved	When read, the value after reset is read.
28 to 0	RFID[28:0]	Receive FIFO Buffer ID Data The standard ID or extended ID of received message can be read. Read bits b10 to b0 for standard ID. Bits b28 to b11 are read as 0.

RFIDE Bit

This bit indicates the ID format (standard ID or extended ID) of the message stored in the receive FIFO buffer.

RFRTR Bit

This bit indicates the frame format (data frame or remote frame) of the message stored in the receive FIFO buffer.

RFID[28:0] Bits

These bits indicate the ID of the message stored in the receive FIFO buffer.

17.3.28 RSCAN0RFPTRx — Receive FIFO Buffer Access Pointer Register (x = 0 to 7)

Access: RSCAN0RFPTRx register can be read only in 32-bit units
RSCAN0RFPTRxL, RSCAN0RFPTRxH registers can be read only in 16-bit units
RSCAN0RFPTRxLL, RSCAN0RFPTRxLH, RSCAN0RFPTRxHL, RSCAN0RFPTRxHH registers can be read only in 8-bit units

Address: RSCAN0RFPTRx: <RSCAN0_base> + $0E04_H$ + (10_H × x)

RSCAN0RFPTRxL: <RSCAN0_base> + $0E04_H$ + (10_H × x),
RSCAN0RFPTRxH: <RSCAN0_base> + $0E06_H$ + (10_H × x)

RSCAN0RFPTRxLL: <RSCAN0_base> + $0E04_H$ + (10_H × x),
RSCAN0RFPTRxLH: <RSCAN0_base> + $0E05_H$ + (10_H × x),
RSCAN0RFPTRxHL: <RSCAN0_base> + $0E06_H$ + (10_H × x),
RSCAN0RFPTRxHH: <RSCAN0_base> + $0E07_H$ + (10_H × x)

Value after reset: $0000\ 0000_H$

Bit	31	30	29	28	27	26	25	24	23	22	21	20	19	18	17	16
	RFDLC[3:0]				RFPTR[11:0]											
Value after reset	0	0	0	0	0	0	0	0	0	0	0	0	0	0	0	0
R/W	R	R	R	R	R	R	R	R	R	R	R	R	R	R	R	R

Bit	15	14	13	12	11	10	9	8	7	6	5	4	3	2	1	0
	RFTS[15:0]															
Value after reset	0	0	0	0	0	0	0	0	0	0	0	0	0	0	0	0
R/W	R	R	R	R	R	R	R	R	R	R	R	R	R	R	R	R

Table 17.43 RSCAN0RFPTRx Register Contents

Bit Position	Bit Name	Function
31 to 28	RFDLC[3:0]	Receive FIFO Buffer DLC Data b31 b30 b29 b28 0 0 0 0: 0 data bytes 0 0 0 1: 1 data byte 0 0 1 0: 2 data bytes 0 0 1 1: 3 data bytes 0 1 0 0: 4 data bytes 0 1 0 1: 5 data bytes 0 1 1 0: 6 data bytes 0 1 1 1: 7 data bytes 1 X X X: 8 data bytes
27 to 16	RFPTR[11:0]	Receive FIFO Buffer Label Data Label information of the received message can be read.
15 to 0	RFTS[15:0]	Receive FIFO Buffer Timestamp Data Timestamp value of the received message can be read.

RFDLC[3:0] Bits

These bits contain the data length of the message stored in the receive FIFO buffer.

RFPTR[11:0] Bits

These bits contain the label information of the message stored in the receive FIFO buffer.

RFTS[15:0] Bits

These bits contain the timestamp value of the message stored in the receive FIFO buffer.

17.3.29 RSCAN0RFDF0x — Receive FIFO Buffer Access Data Field 0 Register (x = 0 to 7)

Access: RSCAN0RFDF0x register can be read-only in 32-bit units
RSCAN0RFDF0xL, RSCAN0RFDF0xH registers can be read only in 16-bit units
RSCAN0RFDF0xLL, RSCAN0RFDF0xLH, RSCAN0RFDF0xHL, RSCAN0RFDF0xHH registers can be read only in 8-bit units

Address: RSCAN0RFDF0x: <RSCAN0_base> + $0E08_H$ + (10_H × x)

RSCAN0RFDF0xL: <RSCAN0_base> + $0E08_H$ + (10_H × x),
RSCAN0RFDF0xH: <RSCAN0_base> + $0E0A_H$ + (10_H × x)

RSCAN0RFDF0xLL: <RSCAN0_base> + $0E08_H$ + (10_H × x),
RSCAN0RFDF0xLH: <RSCAN0_base> + $0E09_H$ + (10_H × x),
RSCAN0RFDF0xHL: <RSCAN0_base> + $0E0A_H$ + (10_H × x),
RSCAN0RFDF0xHH: <RSCAN0_base> + $0E0B_H$ + (10_H × x)

Value after reset: $0000\ 0000_H$

Bit	31	30	29	28	27	26	25	24	23	22	21	20	19	18	17	16
	RFDB3[7:0]								RFDB2[7:0]							
Value after reset	0	0	0	0	0	0	0	0	0	0	0	0	0	0	0	0
R/W	R	R	R	R	R	R	R	R	R	R	R	R	R	R	R	R

Bit	15	14	13	12	11	10	9	8	7	6	5	4	3	2	1	0
	RFDB1[7:0]								RFDB0[7:0]							
Value after reset	0	0	0	0	0	0	0	0	0	0	0	0	0	0	0	0
R/W	R	R	R	R	R	R	R	R	R	R	R	R	R	R	R	R

Table 17.44 RSCAN0RFDF0x Register Contents

Bit Position	Bit Name	Function
31 to 24	RFDB3[7:0]	Receive FIFO Buffer Data Byte 3
23 to 16	RFDB2[7:0]	Receive FIFO Buffer Data Byte 2
15 to 8	RFDB1[7:0]	Receive FIFO Buffer Data Byte 1
7 to 0	RFDB0[7:0]	Receive FIFO Buffer Data Byte 0 Data for a message stored in the receive FIFO buffer can be read.

When the RFDLC[3:0] value in the RSCAN0RFPTRx register is smaller than 1000_B, data bytes for which no data is set are read as 00_H.

17.3.30 RSCAN0RFDF1x — Receive FIFO Buffer Access Data Field 1 Register (x = 0 to 7)

Access: RSCAN0RFDF1x register can be read only in 32-bit units
RSCAN0RFDF1xL, RSCAN0RFDF1xH registers can be read only in 16-bit units
RSCAN0RFDF1xLL, RSCAN0RFDF1xLH, RSCAN0RFDF1xHL, RSCAN0RFDF1xHH registers can be read only in 8-bit units

Address: RSCAN0RFDF1x: <RSCAN0_base> + $0E0C_H$ + (10_H × x)

RSCAN0RFDF1xL: <RSCAN0_base> + $0E0C_H$ + (10_H × x),
RSCAN0RFDF1xH: <RSCAN0_base> + $0E0E_H$ + (10_H × x)

RSCAN0RFDF1xLL: <RSCAN0_base> + $0E0C_H$ + (10_H × x),
RSCAN0RFDF1xLH: <RSCAN0_base> + $0E0D_H$ + (10_H × x),
RSCAN0RFDF1xHL: <RSCAN0_base> + $0E0E_H$ + (10_H × x),
RSCAN0RFDF1xHH: <RSCAN0_base> + $0E0F_H$ + (10_H × x)

Value after reset: $0000\ 0000_H$

Bit	31	30	29	28	27	26	25	24	23	22	21	20	19	18	17	16
	RFDB7[7:0]								RFDB6[7:0]							
Value after reset	0	0	0	0	0	0	0	0	0	0	0	0	0	0	0	0
R/W	R	R	R	R	R	R	R	R	R	R	R	R	R	R	R	R

Bit	15	14	13	12	11	10	9	8	7	6	5	4	3	2	1	0
	RFDB5[7:0]								RFDB4[7:0]							
Value after reset	0	0	0	0	0	0	0	0	0	0	0	0	0	0	0	0
R/W	R	R	R	R	R	R	R	R	R	R	R	R	R	R	R	R

Table 17.45 RSCAN0RFDF1x Register Contents

Bit Position	Bit Name	Function
31 to 24	RFDB7[7:0]	Receive FIFO Buffer Data Byte 7
23 to 16	RFDB6[7:0]	Receive FIFO Buffer Data Byte 6
15 to 8	RFDB5[7:0]	Receive FIFO Buffer Data Byte 5
7 to 0	RFDB4[7:0]	Receive FIFO Buffer Data Byte 4 Data for a message stored in the receive FIFO buffer can be read.

When the RFDLC[3:0] value in the RSCAN0RFPTRx register is smaller than 1000_B, data bytes for which no data is set are read as 00_H.

17.3.31 RSCAN0CFCCk — Transmit/Receive FIFO Buffer Configuration and Control Register k (k = 0 to 8)*

CAUTION

k = 0 to 5 for devices that have 2 channels.

Access: RSCAN0CFCCk register can be read/written in 32-bit units
RSCAN0CFCCkL, RSCAN0CFCCkH registers can be read/written in 16-bit units
RSCAN0CFCCkLL, RSCAN0CFCCkLH, RSCAN0CFCCkHL, RSCAN0CFCCkHH registers can be read/written in 8-bit units

Address: RSCAN0CFCCk: <RSCAN0_base> + 0118_H + (04_H × k)

RSCAN0CFCCkL: <RSCAN0_base> + 0118_H + (04_H × k),
RSCAN0CFCCkH: <RSCAN0_base> + $011A_H$ + (04_H × k)

RSCAN0CFCCkLL: <RSCAN0_base> + 0118_H + (04_H × k),
RSCAN0CFCCkLH: <RSCAN0_base> + 0119_H + (04_H × k),
RSCAN0CFCCkHL: <RSCAN0_base> + $011A_H$ + (04_H × k),
RSCAN0CFCCkHH: <RSCAN0_base> + $011B_H$ + (04_H × k)

Value after reset: $0000\ 0000_H$

Bit	31	30	29	28	27	26	25	24	23	22	21	20	19	18	17	16
	CFITT[7:0]								CFTML[3:0]				CFITR	CFITSS	CFM[1:0]	
Value after reset	0	0	0	0	0	0	0	0	0	0	0	0	0	0	0	0
R/W	R/W	R/W	R/W	R/W	R/W	R/W	R/W	R/W	R/W	R/W	R/W	R/W	R/W	R/W	R/W	R/W

Bit	15	14	13	12	11	10	9	8	7	6	5	4	3	2	1	0
	CFIGCV[2:0]			CFIM	—	CFDC[2:0]			—	—	—	—	—	CFTXIE	CFRXIE	CFE
Value after reset	0	0	0	0	0	0	0	0	0	0	0	0	0	0	0	0
R/W	R/W	R/W	R/W	R/W	R	R/W	R/W	R/W	R	R	R	R	R	R/W	R/W	R/W

Table 17.46 RSCAN0CFCCk Register Contents (1/2)

Bit Position	Bit Name	Function
31 to 24	CFITT[7:0]	Set a message transmission interval. Set Value: 00_H to FF_H
23 to 20	CFTML[3:0]	Transmit Buffer Link Configuration Set the transmit buffer number to be linked to the transmit/receive FIFO buffer.
19	CFITR	Transmit/Receive FIFO Interval Timer Resolution 0: Clock obtained by dividing pclk/2 by the value of ITRCP [15:0] bits 1: Clock obtained by dividing pclk/2 by “the value of ITRCP [15:0] bits x 10”
18	CFITSS	Transmit/Receive FIFO Interval Timer Clock Source Select 0: Interval timer clock source selected by the CFITR bit 1: Interval timer clock source is the bit time clock for the channel to which the FIFO is linked.
17, 16	CFM[1:0]	Transmit/Receive FIFO Mode Select b17 b16 0 0: Receive mode 0 1: Transmit mode 1 0: Gateway mode 1 1: Setting prohibited

Table 17.46 RSCAN0CFCCk Register Contents (2/2)

Bit Position	Bit Name	Function
15 to 13	CFIGCV[2:0]	Transmit/Receive FIFO Receive Interrupt Request Timing Select b15 b14 b13 0 0 0: When FIFO is 1/8 full. 0 0 1: When FIFO is 2/8 full. 0 1 0: When FIFO is 3/8 full. 0 1 1: When FIFO is 4/8 full. 1 0 0: When FIFO is 5/8 full. 1 0 1: When FIFO is 6/8 full. 1 1 0: When FIFO is 7/8 full. 1 1 1: When FIFO is full.
12	CFIM	Transmit/Receive FIFO Interrupt Source Select 0: • Receive mode/gateway mode When the number of received messages has met the condition set by the CFIGCV[2:0] bits, a FIFO receive interrupt request is generated. • Transmit mode/gateway mode When the buffer becomes empty upon completion of message transmission, a FIFO transmit interrupt request is generated. 1: • Receive mode/gateway mode A FIFO receive interrupt request is generated each time a message has been received. • Transmit mode/gateway mode A FIFO transmit interrupt request is generated each time a message has been transmitted.
11	Reserved	When read, the value after reset is read. When writing, write the value after reset.
10 to 8	CFDC[2:0]	Transmit/Receive FIFO Buffer Depth Configuration b10 b9 b8 0 0 0: 0 messages 0 0 1: 4 messages 0 1 0: 8 messages 0 1 1: 16 messages 1 0 0: 32 messages 1 0 1: 48 messages 1 1 0: 64 messages 1 1 1: 128 messages
7 to 3	Reserved	When read, the value after reset is read. When writing, write the value after reset.
2	CFTXIE	Transmit/Receive FIFO Transmit Interrupt Enable 0: Transmit/receive FIFO transmit interrupt is disabled. 1: Transmit/receive FIFO transmit interrupt is enabled.
1	CFRXIE	Transmit/Receive FIFO Receive Interrupt Enable 0: Transmit/receive FIFO receive interrupt is disabled. 1: Transmit/receive FIFO receive interrupt is enabled.
0	CFE	Transmit/Receive FIFO Buffer Enable 0: No transmit/receive FIFO buffer is used. 1: Transmit/receive FIFO buffers are used.

CFITT[7:0] Bits

These bits are used to set a message transmission interval when transmitting messages continuously from a transmit/receive FIFO buffer whose CFM[1:0] bits are set to 01_B (transmit mode) or 10_B (gateway mode).

Clear the CFE bit to 0 (no transmit/receive FIFO buffer is used) before modifying the CFITT[7:0] bits.

CFTML[3:0] Bits

These bits are used to set the number of transmit buffer on the channel which will be linked to transmit/receive FIFO buffer k when the CFM[1:0] bits are set to 01_B (transmit mode) or 10_B (gateway mode). There are three transmit/receive FIFO buffers per channel, so channel number n of FIFO buffer k is calculated as m = k/3 (integer division). The actual assigned transmit buffer number p linked to FIFO buffer k will be ((16 × m) + CFTML[3:0]) (see **Table 17.15**).

See **Table 17.13** and **Table 17.14**, as for the relationship between transmit/receive FIFO buffer k and transmit buffer p.

Setting the CFDC[2:0] bits to 001_B or more enables the setting of the CFTML[3:0] bits.

Do not link to any transmit buffer which is already allocated to a transmit queue on the identical channel or to another transmit/receive FIFO buffer. Modify these bits only in global reset mode.

CFITR Bit

This bit is enabled when the CFITSS bit is 0.

When this bit is 0, the interval timer clock source is the pclk/2 clock divided by the value of the ITRCP[15:0] bits in the RSCAN0GCFG register.

When this bit is 1, the interval timer clock source is the pclk/2 clock divided by (the value of the ITRCP[15:0] bits in the RSCAN0GCFG register × 10).

Modify this bit while the CFE bit is set to 0 (no transmit/receive FIFO buffer is used).

CFITSS Bit

When this bit is 0, the clock selected by the CFITR bit is the count source of the interval timer.

When this bit is 1, the bit time clock of the channel to which the FIFO is linked is the count source of the interval timer.

Modify this bit while the CFE bit is set to 0 (no transmit/receive FIFO buffer is used).

CFM[1:0] Bits

These bits are used to select transmit/receive FIFO mode. Modify these bits only in global reset mode.

CFIGCV[2:0] Bits

When the setting of the CFM[1:0] bits is 00_B (reception mode) or 10_B (gateway mode) and that of the CFIM bit is 0, these bits are used to select the timing for the generation of reception interrupt requests from the transmission and reception FIFO buffer.

An interrupt request is generated when the number of messages stored in the buffer reaches the fraction specified by these bits of the number of the messages for storage (specified in the CFDC[2:0] bits).

When the CFDC[2:0] bits are set to 001_B (4 messages), set the CFIGCV[2:0] bits to 001_B, 011_B, 101_B, or 111_B.

Modify these bits only in global reset mode.

CFIM Bit

This bit is used to select a transmit/receive FIFO interrupt source. Modify this bit only in global reset mode.

CFDC[2:0] Bits

These bits are used to set the number of messages that can be stored in a single transmit/receive FIFO buffer. When these bits are set to 000_B, do not use a transmit/receive FIFIO buffer. Modify these bits only in global reset mode.

CFTXIE Bit

When this bit is set to 1 and the CFTXIF flag in the RSCAN0CFSTSk register is set to 1, a transmit/receive FIFO transmit interrupt request is generated.

Modify this bit with the CFE bit set to 0 (no transmit/receive FIFO buffer is used).

CFRXIE Bit

When this bit is set to 1 and the CFRXIF flag in the RSCAN0CFSTSk register is set to 1, a transmit/receive FIFO receive interrupt request is generated.

Modify this bit with the CFE bit set to 0.

CFE Bit

Setting this bit to 1 makes transmit/receive FIFO buffers available.

When this bit is set to 0 in transmit mode or gateway mode, if a message in the transmit/receive FIFO buffer is being transmitted or will be transmitted next, the transmit/receive FIFO buffer becomes empty after completion of transmission of that message, or upon detection of a CAN bus error, or arbitration-lost. In other cases or in receive mode, the transmit/receive FIFO buffer becomes empty immediately.

This bit is cleared to 0 when the following conditions are met.

- Receive mode: Global reset mode
- Transmit mode or gateway mode: Channel reset mode

Modify this bit in the following mode.

- Receive mode: Global operating mode or global test mode
- Transmit mode or gateway mode: Channel communication mode or channel halt mode

17.3.32 RSCAN0CFSTSk — Transmit/Receive FIFO Buffer Status Register (k = 0 to 8)*

CAUTION

k = 0 to 5 for devices that have 2 channels.

Access: RSCAN0CFSTSk register can be read/written in 32-bit units
RSCAN0CFSTSkL, RSCAN0CFSTSkH registers can be read/written in 16-bit units
RSCAN0CFSTSkLL, RSCAN0CFSTSkLH, RSCAN0CFSTSkHL, RSCAN0CFSTSkHH registers can be read/written in 8-bit units

Address: RSCAN0CFSTSk: <RSCAN0_base> + 0178_H + (04_H × k)

RSCAN0CFSTSkL: <RSCAN0_base> + 0178_H + (04_H × k),
RSCAN0CFSTSkH: <RSCAN0_base> + $017A_H$ + (04_H × k)

RSCAN0CFSTSkLL: <RSCAN0_base> + 0178_H + (04_H × k),
RSCAN0CFSTSkLH: <RSCAN0_base> + 0179_H + (04_H × k),
RSCAN0CFSTSkHL: <RSCAN0_base> + $017A_H$ + (04_H × k),
RSCAN0CFSTSkHH: <RSCAN0_base> + $017B_H$ + (04_H × k)

Value after reset: $0000\ 0001_H$

Bit	31	30	29	28	27	26	25	24	23	22	21	20	19	18	17	16
	—	—	—	—	—	—	—	—	—	—	—	—	—	—	—	—
Value after reset	0	0	0	0	0	0	0	0	0	0	0	0	0	0	0	0
R/W	R	R	R	R	R	R	R	R	R	R	R	R	R	R	R	R

Bit	15	14	13	12	11	10	9	8	7	6	5	4	3	2	1	0
	CFMC[7:0]								—	—	—	CFTXIF	CFRXIF	CFMLT	CFFLL	CFEMP
Value after reset	0	0	0	0	0	0	0	0	0	0	0	0	0	0	0	1
R/W	R	R	R	R	R	R	R	R	R	R	R	R/W*1	R/W*1	R/W*1	R	R

Note 1. The only effective value for writing to this flag bit is 0, which clears the bit. Otherwise writing to the bit results in retention of its state.

Table 17.47 RSCAN0CFSTSk Register Contents

Bit Position	Bit Name	Function
31 to 16	Reserved	When read, the value after reset is read. When writing, write the value after reset.
15 to 8	CFMC[7:0]	Transmit/Receive FIFO Message Counter The number of messages stored in the transmit/receive FIFO buffer.
7 to 5	Reserved	When read, the value after reset is read. When writing, write the value after reset.
4	CFTXIF	Transmit/Receive FIFO Transmit Interrupt Request Flag 0: No transmit/receive FIFO transmit interrupt request is present. 1: A transmit/receive FIFO transmit interrupt request is present.
3	CFRXIF	Transmit/Receive FIFO Receive Interrupt Request Flag 0: No transmit/receive FIFO receive interrupt request is present. 1: A transmit/receive FIFO receive interrupt request is present.
2	CFMLT	Transmit/Receive FIFO Message Lost Flag 0: No transmit/receive FIFO message is lost. 1: A transmit/receive FIFO message is lost.
1	CFFLL	Transmit/Receive FIFO Buffer Full Status Flag 0: The transmit/receive FIFO buffer is not full. 1: The transmit/receive FIFO buffer is full.
0	CFEMP	Transmit/Receive FIFO Buffer Empty Status Flag 0: The transmit/receive FIFO buffer contains messages. 1: The transmit/receive FIFO buffer contains no message (buffer empty).

CFMC[7:0] Bits

The CFMC[7:0] bits indicate the following values that depend on the setting of the CFM[1:0] bits in the RSCAN0CFCCk register.

- When CFM[1:0] value is 01_B (transmit mode): Number of untransmitted messages in the buffer
- When CFM[1:0] value is 00_B (receive mode): Number of unread received messages in the buffer
- When CFM[1:0] value is 10_B (gateway mode): Number of untransmitted received messages in the buffer

These bits are cleared to 0 when any of the following conditions is met.

- When CFM[1:0] value is 00_B: In global reset mode
- When CFM[1:0] value is 01_B or 10_B: In channel reset mode

CFTXIF Flag

The CFTXIF flag is set to 1 when any of the following conditions is met.

- When the CFM[1:0] bits are set to 01_B or 10_B, and the factor selected by the CFIM bit in the RSCAN0CFCCk register occurs

The CFTXIF flag is cleared to 0 when any of the following conditions is met.

- When 0 is written to the CFTXIF flag
- When the CFM[1:0] bits are set to 00_B: In global reset mode
- When the CFM[1:0] bits are set to 01_B or 10_B: In channel reset mode

Write 0 to this flag in global operating mode or global test mode.

To clear the flags of the register to 0, the program must write 0 to the corresponding flag to be cleared. When writing 0, using a store instruction, set the bit to be set to “0” to “0”, and the bits not to be set to “0” to “1”.

CFRXIF Flag

The CFRXIF flag is set to 1 when any of the following conditions is met.

- When the CFM[1:0] bits are set to 00_B or 10_B, and the factor selected by the CFIM bit in the RSCAN0CFCCk register occurs

The CFRXIF flag is cleared to 0 when any of the following conditions is met.

- When 0 is written to the CFRXIF flag
- When the CFM[1:0] bits are set to 00_B: In global reset mode
- When the CFM[1:0] bits are set to 01_B or 10_B: In channel reset mode

Write 0 to this flag in global operating mode or global test mode.

To clear the flags of the register to 0, the program must write 0 to the corresponding flag to be cleared. When writing 0, using a store instruction, set the bit to be set to “0” to “0”, and the bits not to be set to “0” to “1”.

CFMLT Flag

The CFMLT flag is set to 1 when any of the following conditions is met.

- When an attempt is made to store a new message while the transmit/receive FIFO buffer is full. In this case, the new message is discarded.

The CFMLT flag is cleared to 0 when any of the following conditions is met.

- When 0 is written to the CFMLT flag
- When the CFM[1:0] bits are set to 00_B: In global reset mode
- When the CFM[1:0] bits are set to 01_B or 10_B: In channel reset mode

Write 0 to this flag in global operating mode or global test mode

To clear the flags of the register to 0, the program must write 0 to the corresponding flag to be cleared. When writing 0, using store instruction, set the bit to be set to “0” to “0”, and the bits not to be set to “0” to “1”.

CFFLL Flag

The CFFLL flag is set to 1 when any of the following conditions is met.

- When the number of messages stored in the transmit/receive FIFO buffer matches the FIFO buffer depth set by the CFDC[2:0] bits in the RSCAN0CFCCk register.

The CFFLL flag is cleared to 0 when any of the following conditions is met.

- When the number of messages stored in the transmit/receive FIFO buffer becomes smaller than the FIFO buffer depth set by the CFDC[2:0] bits.
- When the CFE bit in the RSCAN0CFCCk register is 0 (no transmit/receive FIFO buffer is used): When not in the transmit abort
- When the CFM[1:0] bits are set to 00_B: In global reset mode
- When the CFM[1:0] bits are set to 01_B or 10_B: In channel reset mode

CFEMP Flag

The CFEMP flag is set to 1 when any of the following conditions is met.

- When the CFM[1:0] bits are set to 00_B: All messages have been read, or in global reset mode
- When the CFM[1:0] bits are set to 01_B or 10_B: All messages have been transmitted, or in channel reset mode
- When the CFE bit is 0 (no transmit/receive FIFO buffer is used): Not in the transmit abort

The CFEMP flag is cleared to 0 when any of the following conditions is met.

- When the CFM[1:0] bits are set to 00_B or 10_B: At least one received message has been stored in the transmit/receive FIFO buffer.
- When the CFM[1:0] bits are set to 01_B: A value of FF_H has been written to the RSCAN0CFPCTRk register after data was written to the RSCAN0CFIDk, RSCAN0CFPTRk, RSCAN0CFDF0k, and RSCAN0CFDF1k registers.

NOTE

To clear CFTXIF, CFRXIF, or CFMLT flag to 0, the program must write 0. When writing, use a store instruction to write “0” to the given flag and “1” to other flags.

17.3.33 RSCAN0CFPCTRk — Transmit/Receive FIFO Buffer Pointer Control Register (k = 0 to 8)*

CAUTION

k = 0 to 5 for devices that have 2 channels.

Access: RSCAN0CFPCTRk register can only be written in 32-bit units
RSCAN0CFPCTRkL, RSCAN0CFPCTRkH registers can only be written in 16-bit units
RSCAN0CFPCTRkLL, RSCAN0CFPCTRkLH, RSCAN0CFPCTRkHL, RSCAN0CFPCTRkHH registers can only be written in 8-bit units

Address: RSCAN0CFPCTRk: <RSCAN0_base> + $01D8_H$ + (04_H × k)

RSCAN0CFPCTRkL: <RSCAN0_base> + $01D8_H$ + (04_H × k),
RSCAN0CFPCTRkH: <RSCAN0_base> + $01DA_H$ + (04_H × k)

RSCAN0CFPCTRkLL: <RSCAN0_base> + $01D8_H$ + (04_H × k),
RSCAN0CFPCTRkLH: <RSCAN0_base> + $01D9_H$ + (04_H × k),
RSCAN0CFPCTRkHL: <RSCAN0_base> + $01DA_H$ + (04_H × k),
RSCAN0CFPCTRkHH: <RSCAN0_base> + $01DB_H$ + (04_H × k)

Value after reset: $0000\ 0000_H$

Bit	31	30	29	28	27	26	25	24	23	22	21	20	19	18	17	16
	—	—	—	—	—	—	—	—	—	—	—	—	—	—	—	—
Value after reset	0	0	0	0	0	0	0	0	0	0	0	0	0	0	0	0
R/W	R	R	R	R	R	R	R	R	R	R	R	R	R	R	R	R

Bit	15	14	13	12	11	10	9	8	7	6	5	4	3	2	1	0
	—	—	—	—	—	—	—	—	CFPC[7:0]							
Value after reset	0	0	0	0	0	0	0	0	0	0	0	0	0	0	0	0
R/W	R	R	R	R	R	R	R	R	W	W	W	W	W	W	W	W

Table 17.48 RSCAN0CFPCTRk Register Contents

Bit Position	Bit Name	Function
31 to 8	Reserved	When read, the value after reset is returned. When writing, write the value after reset.
7 to 0	CFPC[7:0]	Transmit/Receive FIFO Pointer Control • Receive mode: Writing FF_H to these bits moves the read pointer to the next unread message in the transmit/receive FIFO buffer. • Transmit mode: Writing FF_H to these bits moves the write pointer to the next stage of the transmit/receive FIFO buffer. • Gateway mode: Setting prohibited

CFPC[7:0] Bits

- Receive mode (CFM[1:0] value in the RSCAN0CFCCk register is 00_B):
  Writing FF_H to the CFPC[7:0] bits moves the read pointer to the next unread message in the transmit/receive FIFO buffer. At this time, the CFMC[7:0] value (transmit/receive FIFO message counter) in the RSCAN0CFSTSk register is decremented. Read the RSCAN0CFIDk, RSCAN0CFPTRk, RSCAN0CFDF0k, and RSCAN0CFDF1k registers to read messages from the transmit/receive FIFO buffer, and then write FF_H to the CFPC[7:0] bits.
  When writing FF_H to these bits, make sure that the CFE bit in the RSCAN0CFCCk register is set to 1 (transmit/receive FIFO buffers are used) and the CFEMP flag in the RSCAN0CFSTSk

register is 0 (the transmit/receive FIFO buffer contains messages).

- Transmit mode (CFM[1:0] value in the RSCAN0CFCCk register is 01_B):
  Writing FF_H to the CFPC[7:0] bits stores the data written to the RSCAN0CFIDk, RSCAN0CFPTRk, RSCAN0CFDF0k, and RSCAN0CFDF1k registers in the transmit/receive FIFO buffer and moves the write pointer to the next stage of the transmit/receive FIFO buffer. At this time, the CFMC[7:0] value is incremented. Write transmit messages to the RSCAN0CFIDk, RSCAN0CFPTRk, RSCAN0CFDF0k, and RSCAN0CFDF1k registers before writing FF_H to the CFPC[7:0] bits.
  When writing FF_H to these bits, make sure that the CFE bit in the RSCAN0CFCCk register is set to 1 and the CFFLL flag in the RSCAN0CFSTSk register is 0 (the transmit/receive FIFO buffer is not full).

- Gateway mode (CFM[1:0] value in the RSCAN0CFCCk register is 10_B):
  Setting prohibited

17.3.34 RSCAN0CFIDk — Transmit/Receive FIFO Buffer Access ID Register (k = 0 to 8)*

CAUTION

k = 0 to 5 for devices that have 2 channels.

Access: RSCAN0CFIDk register can be read/written in 32-bit units
RSCAN0CFIDkL, RSCAN0CFIDkH registers can be read/written in 16-bit units
RSCAN0CFIDkLL, RSCAN0CFIDkLH, RSCAN0CFIDkHL, RSCAN0CFIDkHH registers can be read/written in 8-bit units

Address: RSCAN0CFIDk: <RSCAN0_base> + $0E80_H$ + (10_H × k)

RSCAN0CFIDkL: <RSCAN0_base> + $0E80_H$ + (10_H × k),
RSCAN0CFIDkH: <RSCAN0_base> + $0E82_H$ + (10_H × k)

RSCAN0CFIDkLL: <RSCAN0_base> + $0E80_H$ + (10_H × k),
RSCAN0CFIDkLH: <RSCAN0_base> + $0E81_H$ + (10_H × k),
RSCAN0CFIDkHL: <RSCAN0_base> + $0E82_H$ + (10_H × k),
RSCAN0CFIDkHH: <RSCAN0_base> + $0E83_H$ + (10_H × k)

Value after reset: $0000\ 0000_H$

Bit	31	30	29	28	27	26	25	24	23	22	21	20	19	18	17	16
	CFIDE	CFRTR	THLEN	CFID[28:16]												
Value after reset	0	0	0	0	0	0	0	0	0	0	0	0	0	0	0	0
R/W	R/W	R/W	R/W	R/W	R/W	R/W	R/W	R/W	R/W	R/W	R/W	R/W	R/W	R/W	R/W	R/W

Bit	15	14	13	12	11	10	9	8	7	6	5	4	3	2	1	0
	CFID[15:0]															
Value after reset	0	0	0	0	0	0	0	0	0	0	0	0	0	0	0	0
R/W	R/W	R/W	R/W	R/W	R/W	R/W	R/W	R/W	R/W	R/W	R/W	R/W	R/W	R/W	R/W	R/W

Table 17.49 RSCAN0CFIDk Register Contents

Bit Position	Bit Name	Function
31	CFIDE	Transmit/Receive FIFO Buffer IDE 0: Standard ID 1: Extended ID
30	CFRTR	Transmit/Receive FIFO Buffer RTR 0: Data frame 1: Remote frame
29	THLEN	Transmit History Data Store Enable This bit is valid only when the CFM[1:0] value is 01_B (transmit mode). 0: Transmit history data is not stored in the buffer. 1: Transmit history data is stored in the buffer.
28 to 0	CFID[28:0]	Transmit/Receive FIFO Buffer ID Data • When CFM[1:0] value is 01_B (transmit mode): Set standard ID or extended ID. For standard ID, write an ID to bits 10 to 0 and write 0 to bits 28 to 11. • When CFM[1:0] value is 00_B (receive mode): Standard ID or extended ID in the received message can be read. For standard ID, read bits 10 to 0. Bits 28 to 11 are read as 0.

This register is writable only when the CFM[1:0] value in the RSCAN0CFCCk register is 01_B (transmit mode). This register is readable only when the CFM[1:0] value is 00_B (receive mode). This RSCAN0CFIDk register should not be read or written when the CFM[1:0] value is 10_B (gateway mode).

CFIDE Bit

This bit indicates the ID format (standard ID or extended ID) of the received message stored in the transmit/receive FIFO buffer when the CFM[1:0] value is 00_B. When the CFM[1:0] value is 01_B, these bits are used to set the ID format of the message to be transmitted from the transmit/receive FIFO buffer.

CFRTR Bit

This bit indicates the data format (data frame or remote frame) of the received message stored in the transmit/receive FIFO buffer when the CFM[1:0] value is 00_B. When the CFM[1:0] value is 01_B, this bit is used to set the data format of the message to be transmitted from the transmit/receive FIFO buffer.

THLEN Bit

When this bit is set to 1, the transmit history data (label information, buffer number, and buffer type) of transmit messages is stored in the transmit history buffer after transmission is completed.

This bit is enabled when the CFM[1:0] value is 01_B (transmit mode).

CFID[28:0] Bits

These bits contain the ID of the received message stored in the transmit/receive FIFO buffer when the CFM[1:0] value is 00_B.

When the CFM[1:0] value is 01_B, this bit is used to set the ID of the message to be transmitted from the transmit/receive FIFO buffer.

17.3.35 RSCAN0CFPTRk — Transmit/Receive FIFO Buffer Access Pointer Register (k = 0 to 8)*

CAUTION

k = 0 to 5 for devices that have 2 channels.

Access: RSCAN0CFPTRk register can be read/written in 32-bit units
RSCAN0CFPTRkL, RSCAN0CFPTRkH registers can be read/written in 16-bit units
RSCAN0CFPTRkLL, RSCAN0CFPTRkLH, RSCAN0CFPTRkHL, RSCAN0CFPTRkHH registers can be read/written in 8-bit units

Address: RSCAN0CFPTRk: <RSCAN0_base> + $0E84_H$ + (10_H × k)

RSCAN0CFPTRkL: <RSCAN0_base> + $0E84_H$ + (10_H × k),
RSCAN0CFPTRkH: <RSCAN0_base> + $0E86_H$ + (10_H × k)

RSCAN0CFPTRkLL: <RSCAN0_base> + $0E84_H$ + (10_H × k),
RSCAN0CFPTRkLH: <RSCAN0_base> + $0E85_H$ + (10_H × k),
RSCAN0CFPTRkHL: <RSCAN0_base> + $0E86_H$ + (10_H × k),
RSCAN0CFPTRkHH: <RSCAN0_base> + $0E87_H$ + (10_H × k)

Value after reset: $0000\ 0000_H$

Bit	31	30	29	28	27	26	25	24	23	22	21	20	19	18	17	16
	CFDLC[3:0]				CFPTR[11:0]											
Value after reset	0	0	0	0	0	0	0	0	0	0	0	0	0	0	0	0
R/W	R/W	R/W	R/W	R/W	R/W	R/W	R/W	R/W	R/W	R/W	R/W	R/W	R/W	R/W	R/W	R/W

Bit	15	14	13	12	11	10	9	8	7	6	5	4	3	2	1	0
	CFTS[15:0]															
Value after reset	0	0	0	0	0	0	0	0	0	0	0	0	0	0	0	0
R/W	R/W	R/W	R/W	R/W	R/W	R/W	R/W	R/W	R/W	R/W	R/W	R/W	R/W	R/W	R/W	R/W

Table 17.50 RSCAN0CFPTRk Register Contents

Bit Position	Bit Name	Function
31 to 28	CFDLC[3:0]	Transmit/Receive FIFO Buffer DLC Data b31 b30 b29 b28 0 0 0 0: 0 data bytes 0 0 0 1: 1 data byte 0 0 1 0: 2 data bytes 0 0 1 1: 3 data bytes 0 1 0 0: 4 data bytes 0 1 0 1: 5 data bytes 0 1 1 0: 6 data bytes 0 1 1 1: 7 data bytes 1 X X X: 8 data bytes
27 to 16	CFPTR[11:0]	Transmit/Receive FIFO Buffer Label Data • When CFM[1:0] value is 01_B (transmit mode): Set the label information to be stored in the transmit history buffer. Only bits CFPTR[7:0] are valid. • When CFM[1:0] value is 00_B (receive mode): The label information of the received message can be read.
15 to 0	CFTS[15:0]	Transmit/Receive FIFO Buffer Timestamp Data These bits are valid only when the CFM[1:0] value is 00_B (receive mode). The timestamp value of the received message can be read.

This register is writable only when the CFM[1:0] value in the RSCAN0CFCCk register is 01_B (transmit mode). This register is readable only when the CFM[1:0] value is 00_B (receive mode). This register should not be read or written when the CFM[1:0] value is 10_B (gateway mode).

CFDLC[3:0] Bits

These bits indicate the data length of the received message stored in the transmit/receive FIFO buffer when the CFM[1:0] value is 00_B. When the CFM[1:0] value is 01_B, these bits are used to set the data length of the message to be transmitted from the transmit/receive FIFO buffer. If the data length is set to 9 bytes or more, the actual transmit data defaults to 8 bytes.

CFPTR[11:0] Bits

These bits indicate the label information attached to the received message stored in the transmit/receive FIFO buffer when the CFM[1:0] value is 00_B. When the CFM[1:0] value is 01_B, the CFPTR[7:0] value is stored in the transmit history buffer when message transmission has been completed.

CFTS[15:0] Bits

These bits indicate the timestamp value of the message stored in the transmit/receive FIFO buffer.

These bits are valid when the CFM[1:0] value is 00_B.

17.3.36 RSCAN0CFDF0k — Transmit/Receive FIFO Buffer Access Data Field 0 Register (k = 0 to 8)*

CAUTION

k = 0 to 5 for devices that have 2 channels.

Access: RSCAN0CFDF0k register can be read/written in 32-bit units
RSCAN0CFDF0kL, RSCAN0CFDF0kH registers can be read/written in 16-bit units
RSCAN0CFDF0kLL, RSCAN0CFDF0kLH, RSCAN0CFDF0kHL, RSCAN0CFDF0kHH registers can be read/written in 8-bit units

Address: RSCAN0CFDF0k: <RSCAN0_base> + $0E88_H$ + (10_H × k)

RSCAN0CFDF0kL: <RSCAN0_base> + $0E88_H$ + (10_H × k),
RSCAN0CFDF0kH: <RSCAN0_base> + $0E8A_H$ + (10_H × k)

RSCAN0CFDF0kLL: <RSCAN0_base> + $0E88_H$ + (10_H × k),
RSCAN0CFDF0kLH: <RSCAN0_base> + $0E89_H$ + (10_H × k),
RSCAN0CFDF0kHL: <RSCAN0_base> + $0E8A_H$ + (10_H × k),
RSCAN0CFDF0kHH: <RSCAN0_base> + $0E8B_H$ + (10_H × k)

Value after reset: $0000\ 0000_H$

Bit	31	30	29	28	27	26	25	24	23	22	21	20	19	18	17	16
	CFDB3[7:0]								CFDB2[7:0]							
Value after reset	0	0	0	0	0	0	0	0	0	0	0	0	0	0	0	0
R/W	R/W	R/W	R/W	R/W	R/W	R/W	R/W	R/W	R/W	R/W	R/W	R/W	R/W	R/W	R/W	R/W

Bit	15	14	13	12	11	10	9	8	7	6	5	4	3	2	1	0
	CFDB1[7:0]								CFDB0[7:0]							
Value after reset	0	0	0	0	0	0	0	0	0	0	0	0	0	0	0	0
R/W	R/W	R/W	R/W	R/W	R/W	R/W	R/W	R/W	R/W	R/W	R/W	R/W	R/W	R/W	R/W	R/W

Table 17.51 RSCAN0CFDF0k Register Contents

Bit Position	Bit Name	Function
31 to 24	CFDB3[7:0]	Transmit/Receive FIFO Buffer Data Byte 3
23 to 16	CFDB2[7:0]	Transmit/Receive FIFO Buffer Data Byte 2
15 to 8	CFDB1[7:0]	Transmit/Receive FIFO Buffer Data Byte 1
7 to 0	CFDB0[7:0]	Transmit/Receive FIFO Buffer Data Byte 0 • When CFM[1:0] value is 01_B (transmit mode): Set the transmit/receive FIFO buffer data. • When CFM[1:0] value is 00_B (receive mode): The message data stored in the transmit/receive FIFO buffer can be read.

This register is writable only when the CFM[1:0] value in the RSCAN0CFCCk register is 01_B (transmit mode).

This register is readable only when the CFM[1:0] value is 00_B (receive mode). When the CFDLC[3:0] value in the RSCAN0CFPTRk register is smaller than 1000_B, data bytes for which no data is set are read as 00_H.

This register should not be read or written when the CFM[1:0] value is 10_B (gateway mode).

17.3.37 RSCAN0CFDF1k — Transmit/Receive FIFO Buffer Access Data Field 1 Register (k = 0 to 8)*

CAUTION

k = 0 to 5 for devices that have 2 channels.

Access: RSCAN0CFDF1k register can be read/written in 32-bit units
RSCAN0CFDF1kL, RSCAN0CFDF1kH registers can be read/written in 16-bit units
RSCAN0CFDF1kLL, RSCAN0CFDF1kLH, RSCAN0CFDF1kHL, RSCAN0CFDF1kHH registers can be read/written in 8-bit units

Address: RSCAN0CFDF1k: <RSCAN0_base> + $0E8C_H$ + (10_H × k)

RSCAN0CFDF1kL: <RSCAN0_base> + $0E8C_H$ + (10_H × k),
RSCAN0CFDF1kH: <RSCAN0_base> + $0E8E_H$ + (10_H × k)

RSCAN0CFDF1kLL: <RSCAN0_base> + $0E8C_H$ + (10_H × k),
RSCAN0CFDF1kLH: <RSCAN0_base> + $0E8D_H$ + (10_H × k),
RSCAN0CFDF1kHL: <RSCAN0_base> + $0E8E_H$ + (10_H × k),
RSCAN0CFDF1kHH: <RSCAN0_base> + $0E8F_H$ + (10_H × k)

Value after reset: $0000\ 0000_H$

Bit	31	30	29	28	27	26	25	24	23	22	21	20	19	18	17	16
	CFDB7[7:0]								CFDB6[7:0]							
Value after reset	0	0	0	0	0	0	0	0	0	0	0	0	0	0	0	0
R/W	R/W	R/W	R/W	R/W	R/W	R/W	R/W	R/W	R/W	R/W	R/W	R/W	R/W	R/W	R/W	R/W

Bit	15	14	13	12	11	10	9	8	7	6	5	4	3	2	1	0
	CFDB5[7:0]								CFDB4[7:0]							
Value after reset	0	0	0	0	0	0	0	0	0	0	0	0	0	0	0	0
R/W	R/W	R/W	R/W	R/W	R/W	R/W	R/W	R/W	R/W	R/W	R/W	R/W	R/W	R/W	R/W	R/W

Table 17.52 RSCAN0CFDF1k Register Contents

Bit Position	Bit Name	Function
31 to 24	CFDB7[7:0]	Transmit/Receive FIFO Buffer Data Byte 7
23 to 16	CFDB6[7:0]	Transmit/Receive FIFO Buffer Data Byte 6
15 to 8	CFDB5[7:0]	Transmit/Receive FIFO Buffer Data Byte 5
7 to 0	CFDB4[7:0]	Transmit/Receive FIFO Buffer Data Byte 4 • When CFM[1:0] value is 01_B (transmit mode): Set the transmit/receive FIFO buffer data. • When CFM[1:0] value is 00_B (receive mode): The message data stored in the transmit/receive FIFO buffer can be read.

This register is writable only when the CFM[1:0] value in the RSCAN0CFCCk register is 01_B (transmit mode).

This register is readable only when the CFM[1:0] value is 00_B (receive mode). When the CFDLC[3:0] value in the RSCAN0CFPTRk register is smaller than 1000_B, data bytes for which no data is set are read as 00_H.

This register should not be read or written when the CFM[1:0] value is 10_B (gateway mode).

17.3.38 RSCAN0FESTS — FIFO Empty Status Register

Access: RSCAN0FESTS registers can be read only in 32-bit units
RSCAN0FESTSL, RSCAN0FESTSH registers can be read only in 16-bit units
RSCAN0FESTSLL, RSCAN0FESTSLH, RSCAN0FESTSHL, RSCAN0FESTSHH registers can be read only in 8-bit units

Address: RSCAN0FESTS: <RSCAN0_base> + 0238_H

RSCAN0FESTSL: <RSCAN0_base> + 0238_H, RSCAN0FESTSH: <RSCAN0_base> + $023A_H$

RSCAN0FESTSLL: <RSCAN0_base> + 0238_H, RSCAN0FESTSLH: <RSCAN0_base> + 0239_H, RSCAN0FESTSHL: <RSCAN0_base> + $023A_H$, RSCAN0FESTSHH: <RSCAN0_base> + $023B_H$

Value after reset: $0001\ FFFF_H$

Bit	31	30	29	28	27	26	25	24	23	22	21	20	19	18	17	16
	—	—	—	—	—	—	—	—	—	—	—	—	—	—	—	CF8EMP
Value after reset	0	0	0	0	0	0	0	0	0	0	0	0	0	0	0	1
R/W	R	R	R	R	R	R	R	R	R	R	R	R	R	R	R	R

Bit	15	14	13	12	11	10	9	8	7	6	5	4	3	2	1	0
	CF7EMP	CF6EMP	CF5EMP	CF4EMP	CF3EMP	CF2EMP	CF1EMP	CF0EMP	RF7EMP	RF6EMP	RF5EMP	RF4EMP	RF3EMP	RF2EMP	RF1EMP	RF0EMP
Value after reset	1	1	1	1	1	1	1	1	1	1	1	1	1	1	1	1
R/W	R	R	R	R	R	R	R	R	R	R	R	R	R	R	R	R

Table 17.53 RSCAN0FESTS Register Contents

Bit Position	Bit Name	Function
31 to 17	Reserved	When read, the value after reset is read.
16	CF8EMP	Transmit/Receive FIFO Buffer Empty Status Flag 0: Transmit/receive FIFO buffer k contains a message. 1: Transmit/receive FIFO buffer k contains no message. (k = 0 to 8)*1
15	CF7EMP	
14	CF6EMP	
13	CF5EMP	
12	CF4EMP	
11	CF3EMP	
10	CF2EMP	
9	CF1EMP	
8	CF0EMP	
7	RF7EMP	Receive FIFO Buffer Empty Status Flag 0: Receive FIFO buffer x contains an unread message. 1: Receive FIFO buffer x contains no unread message (buffer empty). (x = 0 to 7)
6	RF6EMP	
5	RF5EMP	
4	RF4EMP	
3	RF3EMP	
2	RF2EMP	
1	RF1EMP	
0	RF0EMP	

Note 1. k = 0 to 5 for devices that have 2 channels.

The RSCAN0FESTS register is set to $0001\ FFFF_H$ in global reset mode.

CFkEMP Flag (k = 0 to 8)*

The CFkEMP flag is set to 1 when the CFEMP flag in the RSCAN0CFSTSk register is set to 1 (the transmit/receive FIFO buffer contains no message (buffer empty)). When the CFEMP flag is cleared to 0 (the transmit/receive FIFO buffer contains messages), the CFkEMP flag is cleared to 0.

CAUTION

k = 0 to 5 for devices that have 2 channels.

RFxEMP Flag (x = 0 to 7)

The RFxEMP flag is set to 1 when the RFEMP flag in the RSCAN0RFSTSx register is set to 1 (the receive FIFO buffer contains no unread message). When the RFEMP flag is cleared to 0 (the receive FIFO buffer contains unread messages), the RFxEMP flag is cleared to 0.

17.3.39 RSCAN0FFSTS — FIFO Full Status Register

Access: RSCAN0FFSTS register can be read only in 32-bit units
RSCAN0FFSTSL, RSCAN0FFSTSH registers can be read only in 16-bit units
RSCAN0FFSTSLL, RSCAN0FFSTSLH, RSCAN0FFSTSHL, RSCAN0FFSTSHH registers can be read only in 8-bit units

Address: RSCAN0FFSTS: <RSCAN0_base> + $023C_H$

RSCAN0FFSTSL: <RSCAN0_base> + $023C_H$, RSCAN0FFSTSH: <RSCAN0_base> + $023E_H$

RSCAN0FFSTSLL: <RSCAN0_base> + $023C_H$, RSCAN0FFSTSLH: <RSCAN0_base> + $023D_H$,
RSCAN0FFSTSHL: <RSCAN0_base> + $023E_H$, RSCAN0FFSTSHH: <RSCAN0_base> + $023F_H$

Value after reset: $0000\ 0000_H$

Bit	31	30	29	28	27	26	25	24	23	22	21	20	19	18	17	16
	—	—	—	—	—	—	—	—	—	—	—	—	—	—	—	CF8FLL
Value after reset	0	0	0	0	0	0	0	0	0	0	0	0	0	0	0	0
R/W	R	R	R	R	R	R	R	R	R	R	R	R	R	R	R	R

Bit	15	14	13	12	11	10	9	8	7	6	5	4	3	2	1	0
	CF7FLL	CF6FLL	CF5FLL	CF4FLL	CF3FLL	CF2FLL	CF1FLL	CF0FLL	RF7FLL	RF6FLL	RF5FLL	RF4FLL	RF3FLL	RF2FLL	RF1FLL	RF0FLL
Value after reset	0	0	0	0	0	0	0	0	0	0	0	0	0	0	0	0
R/W	R	R	R	R	R	R	R	R	R	R	R	R	R	R	R	R

Table 17.54 RSCAN0FFSTS Register Contents

Bit Position	Bit Name	Function
31 to 17	Reserved	When read, the value after reset is read.
16	CF8FLL	Transmit/Receive FIFO Buffer Full Status Flag 0: Transmit/receive buffer k is not full. 1: Transmit/receive buffer k is full. (k = 0 to 8)*1
15	CF7FLL	
14	CF6FLL	
13	CF5FLL	
12	CF4FLL	
11	CF3FLL	
10	CF2FLL	
9	CF1FLL	
8	CF0FLL	
7	RF7FLL	Receive FIFO Buffer Full Status Flag 0: Receive FIFO buffer x is not full. 1: Receive FIFO buffer x is full. (x = 0 to 7)
6	RF6FLL	
5	RF5FLL	
4	RF4FLL	
3	RF3FLL	
2	RF2FLL	
1	RF1FLL	
0	RF0FLL	

Note 1. k = 0 to 5 for devices that have 2 channels.

The RSCAN0FFSTS register is cleared to $0000\ 0000_H$ in global reset mode.

CFkFLL Flag (k = 0 to 8)*

The CFkFLL flag is set to 1 when the CFFLL flag in the RSCAN0CFSTSk register is set to 1 (the transmit/receive FIFO buffer is full).
When the CFFLL flag is cleared to 0 (the transmit/receive FIFO buffer is not full), the CFkFLL flag is cleared to 0.

CAUTION

k = 0 to 5 for devices that have 2 channels.

RFxFLL Flag (x = 0 to 7)

The RFxFLL flag is set to 1 when the RFFLL flag in the RSCAN0RFSTSx register is set to 1 (the receive FIFO buffer is full). When the RFFLL flag is cleared to 0 (the receive FIFO buffer is not full), the RFxFLL flag is cleared to 0.

17.3.40 RSCAN0FMSTS — FIFO Message Lost Status Register

Access: RSCAN0FMSTS register can be read only in 32-bit units
RSCAN0FMSTSL, RSCAN0FMSTSH registers can be read only in 16-bit units
RSCAN0FMSTSLL, RSCAN0FMSTSLH, RSCAN0FMSTSHL, RSCAN0FMSTSHH registers can be read only in 8-bit units

Address: RSCAN0FMSTS: <RSCAN0_base> + 0240_H

RSCAN0FMSTSL: <RSCAN0_base> + 0240_H, RSCAN0FMSTSH: <RSCAN0_base> + 0242_H

RSCAN0FMSTSLL: <RSCAN0_base> + 0240_H, RSCAN0FMSTSLH: <RSCAN0_base> + 0241_H,
RSCAN0FMSTSHL: <RSCAN0_base> + 0242_H, RSCAN0FMSTSHH: <RSCAN0_base> + 0243_H

Value after reset: $0000\ 0000_H$

Bit	31	30	29	28	27	26	25	24	23	22	21	20	19	18	17	16
	—	—	—	—	—	—	—	—	—	—	—	—	—	—	—	CF8MLT
Value after reset	0	0	0	0	0	0	0	0	0	0	0	0	0	0	0	0
R/W	R	R	R	R	R	R	R	R	R	R	R	R	R	R	R	R

Bit	15	14	13	12	11	10	9	8	7	6	5	4	3	2	1	0
	CF7MLT	CF6MLT	CF5MLT	CF4MLT	CF3MLT	CF2MLT	CF1MLT	CF0MLT	RF7MLT	RF6MLT	RF5MLT	RF4MLT	RF3MLT	RF2MLT	RF1MLT	RF0MLT
Value after reset	0	0	0	0	0	0	0	0	0	0	0	0	0	0	0	0
R/W	R	R	R	R	R	R	R	R	R	R	R	R	R	R	R	R

Table 17.55 RSCAN0FMSTS Register Contents

Bit Position	Bit Name	Function
31 to 17	Reserved	When read, the value after reset is returned. When writing, write the value after reset.
16	CF8MLT	Transmit/Receive FIFO Buffer Message Lost Status Flag 0: No transmit/receive FIFO buffer k message is lost. 1: A transmit/receive FIFO buffer k message is lost. (k = 0 to 8)*1
15	CF7MLT	
14	CF6MLT	
13	CF5MLT	
12	CF4MLT	
11	CF3MLT	
10	CF2MLT	
9	CF1MLT	
8	CF0MLT	
7	RF7MLT	Receive FIFO Buffer Message Lost Status Flag 0: No receive FIFO buffer x message is lost. 1: A receive FIFO buffer x message is lost. (x = 0 to 7)
6	RF6MLT	
5	RF5MLT	
4	RF4MLT	
3	RF3MLT	
2	RF2MLT	
1	RF1MLT	
0	RF0MLT	

Note 1. k = 0 to 5 for devices that have 2 channels.

The RSCAN0FMSTS register is cleared to $0000\ 0000_H$ in global reset mode.

CFkMLT Flag (k = 0 to 8)*

The CFkMLT flag is set to 1 when the CFMLT flag in the RSCAN0CFSTSk register is set to 1 (a transmit/receive FIFO message is lost). When the CFMLT flag is cleared to 0, the CFkMLT flag is cleared to 0.

CAUTION

k = 0 to 5 for devices that have 2 channels.

RFxMLT Flag (x = 0 to 7)

The RFxMLT flag is set to 1 when the RFMLT flag in the RSCAN0RFSTSx register is set to 1 (a receive FIFO message is lost). When the RFMLT flag is cleared to 0, the RFxMLT flag is cleared to 0.

17.3.41 RSCAN0RFISTS — Receive FIFO Buffer Interrupt Flag Status Register

Access: RSCAN0RFISTS register can be read only in 32-bit units
RSCAN0RFISTSL, RSCAN0RFISTSH registers can be read only in 16-bit units
RSCAN0RFISTSLL, RSCAN0RFISTSLH, RSCAN0RFISTSHL, RSCAN0RFISTSHH registers can be read only in 8-bit units

Address: RSCAN0RFISTS: <RSCAN0_base> + 0244_H

RSCAN0RFISTSL: <RSCAN0_base> + 0244_H, RSCAN0RFISTSH: <RSCAN0_base> + 0246_H

RSCAN0RFISTSLL: <RSCAN0_base> + 0244_H, RSCAN0RFISTSLH: <RSCAN0_base> + 0245_H, RSCAN0RFISTSHL: <RSCAN0_base> + 0246_H, RSCAN0RFISTSHH: <RSCAN0_base> + 0247_H

Value after reset: $0000\ 0000_H$

Bit	31	30	29	28	27	26	25	24	23	22	21	20	19	18	17	16
	—	—	—	—	—	—	—	—	—	—	—	—	—	—	—	—
Value after reset	0	0	0	0	0	0	0	0	0	0	0	0	0	0	0	0
R/W	R	R	R	R	R	R	R	R	R	R	R	R	R	R	R	R

Bit	15	14	13	12	11	10	9	8	7	6	5	4	3	2	1	0
	—	—	—	—	—	—	—	—	RF7IF	RF6IF	RF5IF	RF4IF	RF3IF	RF2IF	RF1IF	RF0IF
Value after reset	0	0	0	0	0	0	0	0	0	0	0	0	0	0	0	0
R/W	R	R	R	R	R	R	R	R	R	R	R	R	R	R	R	R

Table 17.56 RSCAN0RFISTS Register Contents

Bit Position	Bit Name	Function
31 to 8	Reserved	When read, the value after reset is read.
7	RF7IF	Receive FIFO Buffer Interrupt Request Status Flag 0: No receive FIFO buffer x interrupt request is present. 1: A receive FIFO buffer x interrupt request is present. (x = 0 to 7)
6	RF6IF	
5	RF5IF	
4	RF4IF	
3	RF3IF	
2	RF2IF	
1	RF1IF	
0	RF0IF	

The RSCAN0RFISTS register is cleared to $0000\ 0000_H$ in global reset mode.

RFxIF Flag (x = 0 to 7)

The RFxIF flag is set to 1 when the RFIF flag in the RSCAN0RFSTSx register is set to 1 (a receive FIFO interrupt request is present). When the RFIF flag is cleared to 0, the RFxIF flag is cleared to 0.

17.3.42 RSCAN0CFRISTS — Transmit/Receive FIFO Buffer Receive Interrupt Flag Status Register

Access: RSCAN0CFRISTS register can be read only in 32-bit units
RSCAN0CFRISTSL, RSCAN0CFRISTSH registers can be read only in 16-bit units
RSCAN0CFRISTSLL, RSCAN0CFRISTSLH, RSCAN0CFRISTSHL, RSCAN0CFRISTSHH registers can be read only in 8-bit units

Address: RSCAN0CFRISTS: <RSCAN0_base> + 0248_H

RSCAN0CFRISTSL: <RSCAN0_base> + 0248_H, RSCAN0CFRISTSH: <RSCAN0_base> + $024A_H$

RSCAN0CFRISTSLL: <RSCAN0_base> + 0248_H, RSCAN0CFRISTSLH: <RSCAN0_base> + 0249_H, RSCAN0CFRISTSHL: <RSCAN0_base> + $024A_H$, RSCAN0CFRISTSHH: <RSCAN0_base> + $024B_H$

Value after reset: $0000\ 0000_H$

Bit	31	30	29	28	27	26	25	24	23	22	21	20	19	18	17	16
	—	—	—	—	—	—	—	—	—	—	—	—	—	—	—	—
Value after reset	0	0	0	0	0	0	0	0	0	0	0	0	0	0	0	0
R/W	R	R	R	R	R	R	R	R	R	R	R	R	R	R	R	R

Bit	15	14	13	12	11	10	9	8	7	6	5	4	3	2	1	0
	—	—	—	—	—	—	—	CF8RXIF	CF7RXIF	CF6RXIF	CF5RXIF	CF4RXIF	CF3RXIF	CF2RXIF	CF1RXIF	CF0RXIF
Value after reset	0	0	0	0	0	0	0	0	0	0	0	0	0	0	0	0
R/W	R	R	R	R	R	R	R	R	R	R	R	R	R	R	R	R

Table 17.57 RSCAN0CFRISTS Register Contents

Bit Position	Bit Name	Function
31 to 9	Reserved	When read, the value after reset is returned. When writing, write the value after reset.
8	CF8RXIF	Transmit/Receive FIFO Buffer Receive Interrupt Request Status Flag 0: No transmit/receive FIFO buffer k receive interrupt request is present. 1: A transmit/receive FIFO buffer k receive interrupt request is present. (k = 0 to 8)*[1]
7	CF7RXIF	
6	CF6RXIF	
5	CF5RXIF	
4	CF4RXIF	
3	CF3RXIF	
2	CF2RXIF	
1	CF1RXIF	
0	CF0RXIF	

Note 1. k = 0 to 5 for devices that have 2 channels.

The RSCAN0CFRISTS register is cleared to $0000\ 0000_H$ in global reset mode.

CFkRXIF Flag (k = 0 to 8)*

The CFkRXIF flag is set to 1 when the CFRXIF flag in the RSCAN0CFSTSk register is set to 1 (a transmit/receive FIFO receive interrupt request is present). When the CFRXIF flag is cleared to 0, the CFkRXIF flag is cleared to 0.

CAUTION

k = 5 for devices that have 2 channels.

17.3.43 RSCAN0CFTISTS — Transmit/Receive FIFO Buffer Transmit Interrupt Flag Status Register

Access: RSCAN0CFTISTS register can be read only in 32-bit units
RSCAN0CFTISTSL, RSCAN0CFTISTSH registers can be read only in 16-bit units
RSCAN0CFTISTSLL, RSCAN0CFTISTSLH, RSCAN0CFTISTSHL, RSCAN0CFTISTSHH registers can be read only in 8-bit units

Address: RSCAN0CFTISTS: <RSCAN0_base> + $024C_H$

RSCAN0CFTISTSL: <RSCAN0_base> + $024C_H$, RSCAN0CFTISTSH: <RSCAN0_base> + $024E_H$

RSCAN0CFTISTSLL: <RSCAN0_base> + $024C_H$, RSCAN0CFTISTSLH: <RSCAN0_base> + $024D_H$, RSCAN0CFTISTSHL: <RSCAN0_base> + $024E_H$, RSCAN0CFTISTSHH: <RSCAN0_base> + $024F_H$

Value after reset: $0000\ 0000_H$

Bit	31	30	29	28	27	26	25	24	23	22	21	20	19	18	17	16
	—	—	—	—	—	—	—	—	—	—	—	—	—	—	—	—
Value after reset	0	0	0	0	0	0	0	0	0	0	0	0	0	0	0	0
R/W	R	R	R	R	R	R	R	R	R	R	R	R	R	R	R	R

Bit	15	14	13	12	11	10	9	8	7	6	5	4	3	2	1	0
	—	—	—	—	—	—	—	CF8TXIF	CF7TXIF	CF6TXIF	CF5TXIF	CF4TXIF	CF3TXIF	CF2TXIF	CF1TXIF	CF0TXIF
Value after reset	0	0	0	0	0	0	0	0	0	0	0	0	0	0	0	0
R/W	R	R	R	R	R	R	R	R	R	R	R	R	R	R	R	R

Table 17.58 RSCAN0CFTISTS Register Contents

Bit Position	Bit Name	Function
31 to 9	Reserved	When read, the value after reset is returned. When writing, write the value after reset.
8	CF8TXIF	Transmit/Receive FIFO Buffer Transmit Interrupt Request Status Flag 0: No transmit/receive FIFO buffer k transmit interrupt request is present. 1: A transmit/receive FIFO buffer k transmit interrupt request is present. (k = 0 to 8)*[1]
7	CF7TXIF	
6	CF6TXIF	
5	CF5TXIF	
4	CF4TXIF	
3	CF3TXIF	
2	CF2TXIF	
1	CF1TXIF	
0	CF0TXIF	

Note 1. k = 0 to 5 for devices that have 2 channels.

The RSCAN0CFTISTS register is cleared to $0000\ 0000_H$ in global reset mode.

CFkTXIF Flag (k = 0 to 8)*

The CFkTXIF flag is set to 1 when the CFTXIF flag in the RSCAN0CFSTSk register is set to 1 (a transmit/receive FIFO transmit interrupt request is present). When the CFTXIF flag is cleared to 0, the CFkTXIF flag is cleared to 0.

CAUTION

k = 0 to 5 for devices that have 2 channels.

17.3.44 RSCAN0TMCp — Transmit Buffer Control Register (p = 0 to 47)*

CAUTION

p = 0 to 31 for devices that have 2 channels.

Access: RSCAN0TMCp register can be read/written in 8-bit units

Address: RSCAN0TMCp: <RSCAN0_base> + 0250_H + (01_H × p)

Value after reset: 00_H

Bit	7	6	5	4	3	2	1	0
	—	—	—	—	—	TMOM	TMTAR	TMTR
Value after reset	0	0	0	0	0	0	0	0
R/W	R	R	R	R	R	R/W	R/W*1	R/W*1

Note 1. The only effective value for writing to this bit is 1, which sets the bit. Otherwise writing to the bit results in retention of its state.

Table 17.59 RSCAN0TMCp Register Contents

Bit Position	Bit Name	Function
7 to 3	Reserved	When read, the value after reset is read. When writing, write the value after reset.
2	TMOM	One-Shot Transmission Enable 0: One-shot transmission is disabled. 1: One-shot transmission is enabled.
1	TMTAR	Transmit Abort Request 0: Transmit abort is not requested. 1: Transmit abort is requested.
0	TMTR	Transmit Request 0: Transmission is not requested. 1: Transmission is requested.

When the RSCAN0TMCp register meets any of the following conditions, set it to 00_H.

- The RSCAN0TMCp register corresponds to the transmit buffer number selected by the CFTML[3:0] bits in the RSCAN0CFCCk register (p = m × 16 + the value of CFTML[3:0] bits).
- The RSCAN0TMCp register corresponds to the transmit buffer allocated to the transmit queue by the TXQDC[3:0] bits in the RSCAN0TXQCCm (m = 0 to 2) register (p = (m × 16 + 15) to (m × 16 + 15 – the value of TXQDC[3:0] bits)).

Bits in the RSCAN0TMCp register are all cleared to 0 in channel reset mode. Modify the RSCAN0TMCp register in channel communication mode or channel halt mode.

TMOM Bit

Setting this bit to 1 enables one-shot transmission. When transmission fails, retransmission defined in the CAN protocol is not performed.

Modify the TMOM bit when the TMTRM flag in the RSCAN0TMSTSp register is set to 0. Set the TMOM bit to 1 together with the TMTR bit.

TMTAR Bit

Setting this bit to 1 generates a transmit abort request for the message stored in the transmit buffer. However, a message that is being transmitted or one that will be transmitted next cannot be aborted.

The TMTAR bit can be set to 1 when TMTR bit is 1.

The TMTAR bit is cleared to 0 when any of the following conditions is met, but cannot be cleared by the program writing 0 to the bit.

- Transmission has been completed.
- Transmit abort has been completed.
- An error or arbitration loss has been detected.

If this bit becomes 0 at the same time as the program writes 1 to this bit, this bit becomes 0.

TMTR Bit

Setting this bit to 1 transmits the message stored in the transmit buffer.

The TMTR bit is cleared to 0 when any of the following conditions is met, but cannot be cleared by the program writing 0 to the bit.

- Transmission has been completed.
- Transmit abort has been completed after the TMTAR bit was set to 1.
- An error or arbitration-lost has been detected with the TMOM bit set to 1.

Set the TMTR bit to 1 when the value of TMTRF[1:0] in the RSCAN0TMSTSp register is 00_B.

17.3.45 RSCAN0TMSTSp — Transmit Buffer Status Register (p = 0 to 47)*

CAUTION

p = 0 to 31 for devices that have 2 channels.

Access: RSCAN0TMSTSp register can be read/written in 8-bit units

Address: RSCAN0TMSTSp: <RSCAN0_base> + $02D0_H$ + (01_H × p)

Value after reset: 00_H

Bit	7	6	5	4	3	2	1	0
	—	—	—	TMTARM	TMTRM	TMTRF[1:0]		TMTSTS
Value after reset	0	0	0	0	0	0	0	0
R/W	R	R	R	R	R	R/W	R/W	R

Table 17.60 RSCAN0TMSTSp Register Contents

Bit Position	Bit Name	Function
7 to 5	Reserved	When read, the value after reset is read. When writing, write the value after reset.
4	TMTARM	Transmit Buffer Transmit Abort Request Status Flag 0: No transmit abort request is present. 1: A transmit abort request is present.
3	TMTRM	Transmit Buffer Transmit Request Status Flag 0: No transmit request is present. 1: A transmit request is present.
2, 1	TMTRF[1:0]	Transmit Buffer Transmit Result Status Flag b2 b1 0 0: Transmission is in progress or no transmit request is present. 0 1: Transmit abort has been completed. 1 0: Transmission has been completed (without transmit abort request). 1 1: Transmission has been completed (with transmit abort request).
0	TMTSTS	Transmit Buffer Transmit Status Flag 0: Transmission is not in progress. 1: Transmission is in progress.

The RSCAN0TMSTSp register is cleared to all 0 in channel reset mode.

TMTARM Flag

The TMTARM flag is set to 1 when the TMTAR bit in the RSCAN0TMCp register is set to 1.

The TMTARM flag is set to 0 when the TMTAR bit in the RSCAN0TMCp register is set to 0.

TMTRM Flag

The TMTRM flag is set to 1 when the TMTR bit in the RSCAN0TMCp register is set to 1.

The TMTRM flag is set to 0 when the TMTR bit in the RSCAN0TMCp register is set to 0.

TMTRF[1:0] Flag

This flag indicates the result of transmission from the transmit buffer.

00_B: Transmission is in progress or no transmit request is present.

01_B: Transmission from the transmit buffer was aborted.

10_B: Transmission has been completed with the TMTAR bit in the RSCAN0TMCp register set to 0 (transmit abort is not requested).

11_B: Transmission has been completed with the TMTAR bit in the RSCAN0TMCp register set to 1 (transmit abort is requested).

Write 00_B to the TMTRF[1:0] flag in channel communication mode or channel halt mode. Do not write any value other than 00_B to this flag.

TMTSTS Flag

This flag is set to 1 when transmission from the transmit buffer starts, and is cleared to 0 when transmission from the transmit buffer has been completed or terminated due to a bus error or arbitration lost.

17.3.46 RSCAN0TMTRSTSy — Transmit Buffer Transmit Request Status Register y (y = 0, 1)

CAUTION

p = 0 to 31 for devices that have 2 channels.

Access: RSCAN0TMTRSTSy register can be read only in 32-bit units
RSCAN0TMTRSTSyL, RSCAN0TMTRSTSyH registers can be read only in 16-bit units
RSCAN0TMTRSTSyLL, RSCAN0TMTRSTSyLH, RSCAN0TMTRSTSyHL, RSCAN0TMTRSTSyHH registers can be read only in 8-bit units

Address: RSCAN0TMTRSTSy: <RSCAN0_base> + 0350_H + (y × 0004_H)

RSCAN0TMTRSTSyL: <RSCAN0_base> + 0350_H + (y × 0004_H),
RSCAN0TMTRSTSyH: <RSCAN0_base> + 0352_H + (y × 0004_H)

RSCAN0TMTRSTSyLL: <RSCAN0_base> + 0350_H + (y × 0004_H),
RSCAN0TMTRSTSyLH: <RSCAN0_base> + 0351_H + (y × 0004_H),
RSCAN0TMTRSTSyHL: <RSCAN0_base> + 0352_H + (y × 0004_H),
RSCAN0TMTRSTSyHH: <RSCAN0_base> + 0353_H + (y × 0004_H)

Value after reset: $0000\ 0000_H$

Bit	31	30	29	28	27	26	25	24	23	22	21	20	19	18	17	16
	TMTRSTSp (p = y × 32 + 31 to y × 32 + 16 (y = 0))															
Value after reset	0	0	0	0	0	0	0	0	0	0	0	0	0	0	0	0
R/W	R	R	R	R	R	R	R	R	R	R	R	R	R	R	R	R

Bit	15	14	13	12	11	10	9	8	7	6	5	4	3	2	1	0
	TMTRSTSp (p = y × 32 + 15 to y × 32 + 0 (y = 0, 1))															
Value after reset	0	0	0	0	0	0	0	0	0	0	0	0	0	0	0	0
R/W	R	R	R	R	R	R	R	R	R	R	R	R	R	R	R	R

Table 17.61 RSCAN0TMTRSTSy Register Contents

Bit Position	Bit Name	Function
31 to 16	TMTRSTSp	Transmit Buffer Transmit Request Status Flag p (p = y × 32 + 31 to y × 32 + 16) 0: No transmit request is present. 1: A transmit request is present. When y is 1, these bits are reserved. When read, the value after reset is read. When writing, write the value after reset.
15 to 0	TMTRSTSp	Transmit Buffer Transmit Request Status Flag p (p = y × 32 + 15 to y × 32 + 0) 0: No transmit request is present. 1: A transmit request is present.

TMTRSTSp Flags (p = 0 to 47)

These flags indicate the status of the TMTR bit in the RSCAN0TMCp register.

When the TMTR bit is set to 1 (transmission is requested), the corresponding TMTRSTSp flag is set to 1.

The corresponding TMTRSTSp flag is cleared to 0 when the TMTR bit is set to 0 (transmission is not requested) or in channel reset mode.

Table 17.62 shows the bit assignment.

Table 17.62 TMTRSTSp Bit Assignment

Bit Position	Channel	Transmit Buffer Number
0	0	0
1	0	1
. .	. .	. .
15	0	15
16	1	0
. .	. .	. .
30	1	14
31	1	15
32	2	0
33	2	1
. .	. .	. .
47	2	15

17.3.47 RSCAN0TMTARSTSy — Transmit Buffer Transmit Abort Request Status Register y (y = 0, 1)

CAUTION

p = 0 to 31 for devices that have 2 channels.

Access: RSCAN0TMTARSTSy register can be read only in 32-bit units
RSCAN0TMTARSTSyL, RSCAN0TMTARSTSyH registers can be read only in 16-bit units
RSCAN0TMTARSTSyLL, RSCAN0TMTARSTSyLH, RSCAN0TMTARSTSyHL, RSCAN0TMTARSTSyHH registers can be read only in 8-bit units

Address: RSCAN0TMTARSTSy: <RSCAN0_base> + 0360_H + (y × 0004_H)

RSCAN0TMTARSTSyL: <RSCAN0_base> + 0360_H + (y × 0004_H),
RSCAN0TMTARSTSyH: <RSCAN0_base> + 0362_H + (y × 0004_H)

RSCAN0TMTARSTSyLL: <RSCAN0_base> + 0360_H + (y × 0004_H),
RSCAN0TMTARSTSyLH: <RSCAN0_base> + 0361_H + (y × 0004_H),
RSCAN0TMTARSTSyHL: <RSCAN0_base> + 0362_H + (y × 0004_H),
RSCAN0TMTARSTSyHH: <RSCAN0_base> + 0363_H + (y × 0004_H)

Value after reset: $0000\ 0000_H$

Bit	31	30	29	28	27	26	25	24	23	22	21	20	19	18	17	16
	TMTARSTSp (p = y × 32 + 31 to y × 32 + 16 (y = 0))															
Value after reset	0	0	0	0	0	0	0	0	0	0	0	0	0	0	0	0
R/W	R	R	R	R	R	R	R	R	R	R	R	R	R	R	R	R

Bit	15	14	13	12	11	10	9	8	7	6	5	4	3	2	1	0
	TMTARSTSp (p = y × 32 + 15 to y × 32 + 0 (y = 0, 1))															
Value after reset	0	0	0	0	0	0	0	0	0	0	0	0	0	0	0	0
R/W	R	R	R	R	R	R	R	R	R	R	R	R	R	R	R	R

Table 17.63 RSCAN0TMTARSTSy Register Contents

Bit Position	Bit Name	Function
31 to 16	TMTARSTSp	Transmit Buffer Transmit Abort Request Status Flag p (p = y × 32 + 31 to y × 32 + 16) 0: No transmit abort request is present. 1: A transmit abort request is present. When y = 1, however, these bits are reserved. When read, the value after reset is read. When writing, write the value after reset.
15 to 0	TMTARSTSp	Transmit Buffer Transmit Abort Request Status Flag p (p = y × 32 + 15 to y × 32 + 0) 0: No transmit abort request is present. 1: A transmit abort request is present.

TMTARSTSp Flags (p = 0 to 47)

These flags indicate the status of the TMTAR bit in the RSCAN0TMCp register.

When the TMTAR bit is set to 1 (transmit abort is requested), the corresponding TMTARSTSp flag is set to 1.

The corresponding TMTARSTSp flag is cleared to 0 when the TMTAR bit is set to 0 (transmit abort is not requested) or in channel reset mode.

Table 17.64 shows the bit assignment.

Table 17.64 TMTARSTSp Bit Assignment

Bit Position	Channel	Transmit Buffer Number
0	0	0
1	0	1
. .	. .	. .
15	0	15
16	1	0
. .	. .	. .
30	1	14
31	1	15
32	2	0
33	2	1
. .	. .	. .
47	2	15

17.3.48 RSCAN0TMTCSTSy — Transmit Buffer Transmit Complete Status Register y (y = 0, 1)

CAUTION

p = 0 to 31 for devices that have 2 channels.

Access: RSCAN0TMTCSTSy register can be read only in 32-bit units
RSCAN0TMTCSTSyL, RSCAN0TMTCSTSyH registers can be read only in 16-bit units
RSCAN0TMTCSTSyLL, RSCAN0TMTCSTSyLH, RSCAN0TMTCSTSyHL, RSCAN0TMTCSTSyHH registers can be read only in 8-bit units

Address: RSCAN0TMTCSTSy: <RSCAN0_base> + 0370_H + (y × 0004_H)

RSCAN0TMTCSTSyL: <RSCAN0_base> + 0370_H + (y × 0004_H),
RSCAN0TMTCSTSyH: <RSCAN0_base> + 0372_H + (y × 0004_H)

RSCAN0TMTCSTSyLL: <RSCAN0_base> + 0370_H + (y × 0004_H),
RSCAN0TMTCSTSyLH: <RSCAN0_base> + 0371_H + (y × 0004_H),
RSCAN0TMTCSTSyHL: <RSCAN0_base> + 0372_H + (y × 0004_H),
RSCAN0TMTCSTSyHH: <RSCAN0_base> + 0273_H + (y × 0004_H)

Value after reset: $0000\ 0000_H$

Bit	31	30	29	28	27	26	25	24	23	22	21	20	19	18	17	16
	TMTCSTSp (p = y × 32 + 31 to y × 32 + 16 (y = 0))															
Value after reset	0	0	0	0	0	0	0	0	0	0	0	0	0	0	0	0
R/W	R	R	R	R	R	R	R	R	R	R	R	R	R	R	R	R

Bit	15	14	13	12	11	10	9	8	7	6	5	4	3	2	1	0
	TMTCSTSp (p = y × 32 + 15 to y × 32 + 0 (y = 0, 1))															
Value after reset	0	0	0	0	0	0	0	0	0	0	0	0	0	0	0	0
R/W	R	R	R	R	R	R	R	R	R	R	R	R	R	R	R	R

Table 17.65 RSCAN0TMTCSTSy Register Contents

Bit Position	Bit Name	Function
31 to 16	TMTCSTSp	Transmit Buffer Transmit Complete Status Flag p (p = y × 32 + 31 to y × 32 + 16) 0: Transmission has not been completed. 1: Transmission has been completed. When y = 1, however, these bits are reserved. When read, the value after reset is read. When writing, write the value after reset.
15 to 0	TMTCSTSp	Transmit Buffer Transmit Complete Status Flag p (p = y × 32 + 15 to y × 32 + 0) 0: Transmission has not been completed. 1: Transmission has been completed.

TMTCSTSp Flags (p = 0 to 47)

When the TMTRF[1:0] flag in the RSCAN0TMSTSp register is set to 10_B (transmission has been completed (without transmit abort request)) or 11_B (transmission has been completed (with transmit abort request)), the corresponding TMTCSTSp flag is set to 1.

A TMTCSTSp flag is cleared to 0 when the corresponding TMTRF[1:0] flag is set to 00_B or in channel reset mode.

Table 17.66 shows the bit assignment.

Table 17.66 TMTCSTSp Bit Assignment

Bit Position	Channel	Transmit Buffer Number
0	0	0
1	0	1
. .	. .	. .
15	0	15
16	1	0
. .	. .	. .
30	1	14
31	1	15
32	2	0
33	2	1
. .	. .	. .
47	2	15

17.3.49 RSCAN0TMTASTSy — Transmit Buffer Transmit Abort Status Register y (y = 0, 1)

CAUTION

p = 0 to 31 for devices that have 2 channels.

Access: RSCAN0TMTASTSy register can be read only in 32-bit units
RSCAN0TMTASTSyL, RSCAN0TMTASTSyH registers can be read only in 16-bit units
RSCAN0TMTASTSyLL, RSCAN0TMTASTSyLH, RSCAN0TMTASTSyHL, RSCAN0TMTASTSyHH registers can be read only in 8-bit units

Address: RSCAN0TMTASTSy: <RSCAN0_base> + 0380_H + (y × 0004_H)

RSCAN0TMTASTSyL: <RSCAN0_base> + 0380_H + (y × 0004_H),
RSCAN0TMTASTSyH: <RSCAN0_base> + 0382_H + (y × 0004_H)

RSCAN0TMTASTSyLL: <RSCAN0_base> + 0380_H + (y × 0004_H),
RSCAN0TMTASTSyLH: <RSCAN0_base> + 0381_H + (y × 0004_H),
RSCAN0TMTASTSyHL: <RSCAN0_base> + 0382_H + (y × 0004_H),
RSCAN0TMTASTSyHH: <RSCAN0_base> + 0383_H + (y × 0004_H)

Value after reset: $0000\ 0000_H$

Bit	31	30	29	28	27	26	25	24	23	22	21	20	19	18	17	16
	TMTASTSp (p = y × 32 + 31 to y × 32 + 16 (y = 0))															
Value after reset	0	0	0	0	0	0	0	0	0	0	0	0	0	0	0	0
R/W	R	R	R	R	R	R	R	R	R	R	R	R	R	R	R	R

Bit	15	14	13	12	11	10	9	8	7	6	5	4	3	2	1	0
	TMTASTSp (p = y × 32 + 15 to y × 32 + 0 (y = 0, 1))															
Value after reset	0	0	0	0	0	0	0	0	0	0	0	0	0	0	0	0
R/W	R	R	R	R	R	R	R	R	R	R	R	R	R	R	R	R

Table 17.67 RSCAN0TMTASTSy Register Contents

Bit Position	Bit Name	Function
31 to 16	TMTASTSp	Transmit Buffer Transmit Abort Status Flag p (p = y × 32 + 31 to y × 32 + 16) 0: Transmission is not aborted 1: Transmission is aborted When y = 1, however, these bits are reserved. When read, the value after reset is read. When writing, write the value after reset.
15 to 0	TMTASTSp	Transmit Buffer Transmit Abort Status Flag p (p = y × 32 + 15 to y × 32 + 0) 0: Transmission is not aborted. 1: Transmission is aborted.

TMTASTSp Flags (p = 0 to 47)

When the TMTRF[1:0] flag in the RSCAN0TMSTSp register is set to 01_B (transmit abort has been completed), the corresponding TMTASTSp flag is set to 1.

A TMTASTSp flag is cleared to 0 when the corresponding TMTRF[1:0] flag is set to 00_B or in channel reset mode.

Table 17.68 shows the bit assignment.

Table 17.68 TMTASTSp Bit Assignment

Bit Position	Channel	Transmit Buffer Number
0	0	0
1	0	1
. .	. .	. .
15	0	15
16	1	0
. .	. .	. .
30	1	14
31	1	15
32	2	0
33	2	1
. .	. .	. .
47	2	15

17.3.50 RSCAN0TMIECy — Transmit Buffer Interrupt Enable Configuration Register y (y = 0, 1)

CAUTION

p = 0 to 31 for devices that have 2 channels.

Access: RSCAN0TMIECy register can be read/written in 32-bit units
RSCAN0TMIECyL, RSCAN0TMIECyH registers can be read/written in 16-bit units
RSCAN0TMIECyLL, RSCAN0TMIECyLH, RSCAN0TMIECyHL, RSCAN0TMIECyH registers can be read/written in 8-bit units

Address: RSCAN0TMIECy: <RSCAN0_base> + 0390_H + (y × 0004_H)

RSCAN0TMIECyL: <RSCAN0_base> + 0390_H + (y × 0004_H),
RSCAN0TMIECyH: <RSCAN0_base> + 0392_H + (y × 0004_H)

RSCAN0TMIECyLL: <RSCAN0_base> + 0390_H + (y × 0004_H),
RSCAN0TMIECyLH: <RSCAN0_base> + 0391_H + (y × 0004_H),
RSCAN0TMIECyHL: <RSCAN0_base> + 0392_H + (y × 0004_H),
RSCAN0TMIECyHH: <RSCAN0_base> + 0393_H + (y × 0004_H)

Value after reset: $0000\ 0000_H$

Bit	31	30	29	28	27	26	25	24	23	22	21	20	19	18	17	16
	TMIEp (p = y × 32 + 31 to y × 32 + 16 (y = 0))															
Value after reset	0	0	0	0	0	0	0	0	0	0	0	0	0	0	0	0
R/W	R/W	R/W	R/W	R/W	R/W	R/W	R/W	R/W	R/W	R/W	R/W	R/W	R/W	R/W	R/W	R/W

Bit	15	14	13	12	11	10	9	8	7	6	5	4	3	2	1	0
	TMIEp (p = y × 32 + 15 to y × 32 + 0 (y = 0, 1))															
Value after reset	0	0	0	0	0	0	0	0	0	0	0	0	0	0	0	0
R/W	R/W	R/W	R/W	R/W	R/W	R/W	R/W	R/W	R/W	R/W	R/W	R/W	R/W	R/W	R/W	R/W

Table 17.69 RSCAN0TMIECy Register Contents

Bit Position	Bit Name	Function
31 to 16	TMIEp	Transmit Buffer Interrupt Enable p (p = y × 32 + 31 to y × 32 + 16) 0: Transmit buffer interrupt is disabled 1: Transmit buffer interrupt is enabled When y = 1, however, these bits are reserved. When read, the value after reset is read. When writing, write the value after reset.
15 to 0	TMIEp	Transmit Buffer Interrupt Enable p (p = y × 32 + 15 to y × 32 + 0) 0: Transmit buffer interrupt is disabled. 1: Transmit buffer interrupt is enabled.

TMIEp Bits (p = 0 to 47)

When any of these bits is set to 1 and the corresponding transmission has been completed, a transmit buffer interrupt request is generated.

Modify these bits when the TMTRM flag in the corresponding RSCAN0TMSTSp register is 0 (no transmit request is present).

Write 0 to bits corresponding to transmit buffers linked to transmit/receive FIFO buffers or transmit buffers allocated to the transmit queue.

Table 17.70 shows the bit assignment.

Table 17.70 TMIEp Bit Assignment

Bit Position	Channel	Transmit Buffer Number
0	0	0
1	0	1
. .	. .	. .
15	0	15
16	1	0
. .	. .	. .
30	1	14
31	1	15
32	2	0
33	2	1
. .	. .	. .
47	2	15

17.3.51 RSCAN0TMIDp — Transmit Buffer ID Register (p = 0 to 47)*

CAUTION

p = 0 to 31 for devices that have 2 channels.

Access: RSCAN0TMIDp register can be read/written in 32-bit units
RSCAN0TMIDpL, RSCAN0TMIDpH registers can be read/written in 16-bit units
RSCAN0TMIDpLL, RSCAN0TMIDpLH, RSCAN0TMIDpHL, RSCAN0TMIDpHH registers can be read/written in 8-bit units

Address: RSCAN0TMIDp: <RSCAN0_base> + 1000_H + (10_H × p)

RSCAN0TMIDpL: <RSCAN0_base> + 1000_H + (10_H × p),
RSCAN0TMIDpH: <RSCAN0_base> + 1002_H + (10_H × p)

RSCAN0TMIDpLL: <RSCAN0_base> + 1000_H + (10_H × p),
RSCAN0TMIDpLH: <RSCAN0_base> + 1001_H + (10_H × p),
RSCAN0TMIDpHL: <RSCAN0_base> + 1002_H + (10_H × p),
RSCAN0TMIDpHH: <RSCAN0_base> + 1003_H + (10_H × p)

Value after reset: $0000\ 0000_H$

Bit	31	30	29	28	27	26	25	24	23	22	21	20	19	18	17	16
	TMIDE	TMRTR	THLEN	TMID[28:16]												
Value after reset	0	0	0	0	0	0	0	0	0	0	0	0	0	0	0	0
R/W	R/W	R/W	R/W	R/W	R/W	R/W	R/W	R/W	R/W	R/W	R/W	R/W	R/W	R/W	R/W	R/W

Bit	15	14	13	12	11	10	9	8	7	6	5	4	3	2	1	0
	TMID[15:0]															
Value after reset	0	0	0	0	0	0	0	0	0	0	0	0	0	0	0	0
R/W	R/W	R/W	R/W	R/W	R/W	R/W	R/W	R/W	R/W	R/W	R/W	R/W	R/W	R/W	R/W	R/W

Table 17.71 RSCAN0TMIDp Register Contents

Bit Position	Bit Name	Function
31	TMIDE	Transmit Buffer IDE 0: Standard ID 1: Extended ID
30	TMRTR	Transmit Buffer RTR 0: Data frame 1: Remote frame
29	THLEN	Transmit History Data Store Enable 0: Transmit history data is not stored in the buffer. 1: Transmit history data is stored in the buffer.
28 to 0	TMID[28:0]	Transmit Buffer ID Data Set standard ID or extended ID. For standard ID, write an ID to bits 10 to 0 and write 0 to bits 28 to 11.

Modify this register when the TMTRM bit in the corresponding RSCAN0TMSTSp register is set to 0 (no transmit request is present). If this register is linked to a transmit/receive FIFO buffer, do not write data to this register. If this register is allocated to the transmit queue, only write data to a transmit buffer p (p = m × 16 + 15) for the corresponding channel.

TMIDE Bit

This bit is used to set the ID format of the message to be transmitted from the transmit buffer.

TMRTR Bit

This bit is used to set the data format of the message to be transmitted from the transmit buffer.

THLEN Bit

With this bit set to 1, the transmit history data of the message transmitted (label information and the number and type) are stored in the transmit history buffer after transmission is completed.

TMID[28:0] Bits

These bits are used to set the ID of the message to be transmitted from the transmit buffer.

17.3.52 RSCAN0TMPTRp — Transmit Buffer Pointer Register (p= 0 to 47)*

CAUTION

p = 0 to 31 for devices that have 2 channels.

Access: RSCAN0TMPTRp register can be read/written in 32-bit units
RSCAN0TMPTRpL, RSCAN0TMPTRpH registers can be read/written in 16-bit units
RSCAN0TMPTRpLL, RSCAN0TMPTRpLH, RSCAN0TMPTRpHL, RSCAN0TMPTRpHH registers can be read/written in 8-bit units

Address: RSCAN0TMPTRp: <RSCAN0_base> + 1004_H + (10_H × p)

RSCAN0TMPTRpL: <RSCAN0_base> + 1004_H + (10_H × p),
RSCAN0TMPTRpH: <RSCAN0_base> + 1006_H + (10_H × p)

RSCAN0TMPTRpLL: <RSCAN0_base> + 1004_H + (10_H × p),
RSCAN0TMPTRpLH: <RSCAN0_base> + 1005_H + (10_H × p),
RSCAN0TMPTRpHL: <RSCAN0_base> + 1006_H + (10_H × p),
RSCAN0TMPTRpHH: <RSCAN0_base> + 1007_H + (10_H × p)

Value after reset: $0000\ 0000_H$

Bit	31	30	29	28	27	26	25	24	23	22	21	20	19	18	17	16
	TMDLC[3:0]				—	—	—	—	TMPTR[7:0]							
Value after reset	0	0	0	0	0	0	0	0	0	0	0	0	0	0	0	0
R/W	R/W	R/W	R/W	R/W	R	R	R	R	R/W	R/W	R/W	R/W	R/W	R/W	R/W	R/W

Bit	15	14	13	12	11	10	9	8	7	6	5	4	3	2	1	0
	—	—	—	—	—	—	—	—	—	—	—	—	—	—	—	—
Value after reset	0	0	0	0	0	0	0	0	0	0	0	0	0	0	0	0
R/W	R	R	R	R	R	R	R	R	R	R	R	R	R	R	R	R

Table 17.72 RSCAN0TMPTRp Register Contents

Bit Position	Bit Name	Function
31 to 28	TMDLC[3:0]	Transmit Buffer DLC Data b31 b30 b29 b28 0 0 0 0: 0 data bytes 0 0 0 1: 1 data byte 0 0 1 0: 2 data bytes 0 0 1 1: 3 data bytes 0 1 0 0: 4 data bytes 0 1 0 1: 5 data bytes 0 1 1 0: 6 data bytes 0 1 1 1: 7 data bytes 1 X X X: 8 data bytes
27 to 24	Reserved	When read, the value after reset is read. When writing, write the value after reset.
23 to 16	TMPTR[7:0]	Transmit Buffer Label Data Set the label information to be stored in the transmit history buffer.
15 to 0	Reserved	When read, the value after reset is read. When writing, write the value after reset.

Modify this register when the TMTRM bit in the corresponding RSCAN0TMSTSp register is set to 0 (no transmit request is present). If this register is linked to a transmit/receive FIFO buffer, do not write to this register. If this register is allocated to the transmit queue, only write to a transmit buffer p (p = m × 16 + 15) for the corresponding channel.

TMDLC[3:0] Bits

These bits are used to set the data length of the message to be transmitted from the transmit buffer when the TMRTR bit in the RSCAN0TMIDp register is set to 0 (data frame). If the data length is set to 9 bytes or more, the transmit data is 8 bytes long.

When the TMRTR bit is set to 1 (remote frame), set the data length of messages to be requested.

TMPTR[7:0] Bits

When message transmission has been completed, the TMPTR[7:0] value is stored in the transmit history buffer.

17.3.53 RSCAN0TMDF0p — Transmit Buffer Data Field 0 Register (p = 0 to 47)*

CAUTION

p = 0 to 31 for devices that have 2 channels.

Access: RSCAN0TMDF0p register can be read/written in 32-bit units
RSCAN0TMDF0pL, RSCAN0TMDF0pH registers can be read/written in 16-bit units
RSCAN0TMDF0pLL, RSCAN0TMDF0pLH, RSCAN0TMDF0pHL, RSCAN0TMDF0pHH registers can be read/written in 8-bit units

Address: RSCAN0TMDF0p: <RSCAN0_base> + 1008_H + (10_H × p)

RSCAN0TMDF0pL: <RSCAN0_base> + 1008_H + (10_H × p),
RSCAN0TMDF0pH: <RSCAN0_base> + $100A_H$ + (10_H × p)

RSCAN0TMDF0pLL: <RSCAN0_base> + 1008_H + (10_H × p),
RSCAN0TMDF0pLH: <RSCAN0_base> + 1009_H + (10_H × p),
RSCAN0TMDF0pHL: <RSCAN0_base> + $100A_H$ + (10_H × p),
RSCAN0TMDF0pHH: <RSCAN0_base> + $100B_H$ + (10_H × p)

Value after reset: $0000\ 0000_H$

Bit	31	30	29	28	27	26	25	24	23	22	21	20	19	18	17	16
	TMDB3[7:0]								TMDB2[7:0]							
Value after reset	0	0	0	0	0	0	0	0	0	0	0	0	0	0	0	0
R/W	R/W	R/W	R/W	R/W	R/W	R/W	R/W	R/W	R/W	R/W	R/W	R/W	R/W	R/W	R/W	R/W

Bit	15	14	13	12	11	10	9	8	7	6	5	4	3	2	1	0
	TMDB1[7:0]								TMDB0[7:0]							
Value after reset	0	0	0	0	0	0	0	0	0	0	0	0	0	0	0	0
R/W	R/W	R/W	R/W	R/W	R/W	R/W	R/W	R/W	R/W	R/W	R/W	R/W	R/W	R/W	R/W	R/W

Table 17.73 RSCAN0TMDF0p Register Contents

Bit Position	Bit Name	Function
31 to 24	TMDB3[7:0]	Transmit Buffer Data Byte 3
23 to 16	TMDB2[7:0]	Transmit Buffer Data Byte 2
15 to 8	TMDB1[7:0]	Transmit Buffer Data Byte 1
7 to 0	TMDB0[7:0]	Transmit Buffer Data Byte 0 Set the transmit buffer data.

Modify this register when the TMTRM bit in the corresponding RSCAN0TMSTSp register is set to 0 (no transmit request is present). If this register is linked to a transmit/receive FIFO buffer, do not write to this register. If this register is allocated to the transmit queue, only write to a transmit buffer p (p = m × 16 + 15) for the corresponding channel.

17.3.54 RSCAN0TMDF1p — Transmit Buffer Data Field 1 Register (p = 0 to 47)*

CAUTION

p = 0 to 31 for devices that have 2 channels.

Access: RSCAN0TMDF1p register can be read/written in 32-bit units
RSCAN0TMDF1pL, RSCAN0TMDF1pH registers can be read/written in 16-bit units
RSCAN0TMDF1pLL, RSCAN0TMDF1pLH, RSCAN0TMDF1pHL, RSCAN0TMDF1pHH registers can be read/written in 8-bit units

Address: RSCAN0TMDF1p: <RSCAN0_base> + $100C_H$ + (10_H × p)

RSCAN0TMDF1pL: <RSCAN0_base> + $100C_H$ + (10_H × p),
RSCAN0TMDF1pH: <RSCAN0_base> + $100E_H$ + (10_H × p)

RSCAN0TMDF1pLL: <RSCAN0_base> + $100C_H$ + (10_H × p),
RSCAN0TMDF1pLH: <RSCAN0_base> + $100D_H$ + (10_H × p),
RSCAN0TMDF1pHL: <RSCAN0_base> + $100E_H$ + (10_H × p),
RSCAN0TMDF1pHH: <RSCAN0_base> + $100F_H$ + (10_H × p)

Value after reset: $0000\ 0000_H$

Bit	31	30	29	28	27	26	25	24	23	22	21	20	19	18	17	16
	TMDB7[7:0]								TMDB6[7:0]							
Value after reset	0	0	0	0	0	0	0	0	0	0	0	0	0	0	0	0
R/W	R/W	R/W	R/W	R/W	R/W	R/W	R/W	R/W	R/W	R/W	R/W	R/W	R/W	R/W	R/W	R/W

Bit	15	14	13	12	11	10	9	8	7	6	5	4	3	2	1	0
	TMDB5[7:0]								TMDB4[7:0]							
Value after reset	0	0	0	0	0	0	0	0	0	0	0	0	0	0	0	0
R/W	R/W	R/W	R/W	R/W	R/W	R/W	R/W	R/W	R/W	R/W	R/W	R/W	R/W	R/W	R/W	R/W

Table 17.74 RSCAN0TMDF1p Register Contents

Bit Position	Bit Name	Function
31 to 24	TMDB7[7:0]	Transmit Buffer Data Byte 7
23 to 16	TMDB6[7:0]	Transmit Buffer Data Byte 6
15 to 8	TMDB5[7:0]	Transmit Buffer Data Byte 5
7 to 0	TMDB4[7:0]	Transmit Buffer Data Byte 4 Set the transmit buffer data.

Modify this register when the TMTRM bit in the corresponding RSCAN0TMSTSp register is set to 0 (no transmit request is present). If this register is linked to a transmit/receive FIFO buffer, do not write to this register. If this register is allocated to the transmit queue, only write to a transmit buffer p (p = m × 16 + 15) for the corresponding channel.

17.3.55 RSCAN0TXQCCm — Transmit Queue Configuration and Control Register (m = 0 to 2)

Access: RSCAN0TXQCCm register can be read/written in 32-bit units
RSCAN0TXQCCmL, RSCAN0TXQCCmH registers can be read/written in 16-bit units
RSCAN0TXQCCmLL, RSCAN0TXQCCmLH, RSCAN0TXQCCmHL, RSCAN0TXQCCmHH registers can be read/written in 8-bit units

Address: RSCAN0TXQCCm: <RSCAN0_base> + $03A0_H$ + (04_H × m)

RSCAN0TXQCCmL: <RSCAN0_base> + $03A0_H$ + (04_H × m),
RSCAN0TXQCCmH: <RSCAN0_base> + $03A2_H$ + (04_H × m)

RSCAN0TXQCCmLL: <RSCAN0_base> + $03A0_H$ + (04_H × m),
RSCAN0TXQCCmLH: <RSCAN0_base> + $03A1_H$ + (04_H × m),
RSCAN0TXQCCmHL: <RSCAN0_base> + $03A2_H$ + (04_H × m),
RSCAN0TXQCCmHH: <RSCAN0_base> + $03A3_H$ + (04_H × m)

Value after reset: $0000\ 0000_H$

Bit	31	30	29	28	27	26	25	24	23	22	21	20	19	18	17	16
	—	—	—	—	—	—	—	—	—	—	—	—	—	—	—	—
Value after reset	0	0	0	0	0	0	0	0	0	0	0	0	0	0	0	0
R/W	R	R	R	R	R	R	R	R	R	R	R	R	R	R	R	R

Bit	15	14	13	12	11	10	9	8	7	6	5	4	3	2	1	0
	—	—	TXQIM	TXQIE	TXQDC[3:0]				—	—	—	—	—	—	—	TXQE
Value after reset	0	0	0	0	0	0	0	0	0	0	0	0	0	0	0	0
R/W	R	R	R/W	R/W	R/W	R/W	R/W	R/W	R	R	R	R	R	R	R	R/W

Table 17.75 RSCAN0TXQCCm Register Contents

Bit Position	Bit Name	Function
31 to 14	Reserved	When read, the value after reset is read. When writing, write the value after reset.
13	TXQIM	Transmit Queue Interrupt Source Select 0: When the transmit queue becomes empty upon completion of message transmission, a transmit queue interrupt request is generated. 1: A transmit queue interrupt request is generated each time a message has been transmitted.
12	TXQIE	Transmit Queue Interrupt Enable 0: Transmit queue interrupt is disabled. 1: Transmit queue interrupt is enabled.
11 to 8	TXQDC[3:0]	Transmit Queue Depth Configuration Setting these bits to g (g = 2 to 15) makes the (g + 1)-buffer transmit queue available. Setting these bits to 0 disables the transmit queue. Setting these bits to 1 is prohibited.
7 to 1	Reserved	When read, the value after reset is read. When writing, write the value after reset.
0	TXQE	Transmit Queue Enable 0: The transmit queue is not used. 1: The transmit queue is used.

TXQIM Bit

This bit is used to select a transmit queue interrupt source. Modify this bit in channel reset mode.

TXQIE Bit

When the TXQIE bit is set to 1 and the source selected by the TXQIM bit occurs, an interrupt request is generated.

Set the TXQE bit to 0 before modifying the TXQIE bit.

TXQDC[3:0] Bits

These bits are used to specify the number of transmit buffers to be allocated to the transmit queues. Transmit buffers are allocated to transmit queues in descending order of buffer number, that is, from (m × 16 + 15) to (m × 16 + 0) (see **Table 17.16**). For examples of how buffer allocation is done, see **Figure 17.9**. Modify these bits only in channel reset mode.

TXQE Bit

Setting this bit to 1 makes the transmit queue available. Modify this bit in channel communication mode or channel halt mode. This bit is cleared to 0 in channel reset mode.

Before setting the TXQE bit to 1, set the TXQDC[3:0] bits to 0010_B or more.

17.3.56 RSCAN0TXQSTSm — Transmit Queue Status Register (m = 0 to 2)

Access: RSCAN0TXQSTSm register can be read/written in 32-bit units
RSCAN0TXQSTSmL, RSCAN0TXQSTSmH registers can be read/written in 16-bit units
RSCAN0TXQSTSmLL, RSCAN0TXQSTSmLH, RSCAN0TXQSTSmHL, RSCAN0TXQSTSmHH registers can be read/written in 8-bit units

Address: RSCAN0TXQSTSm: <RSCAN0_base> + $03C0_H$ + (04_H × m)

RSCAN0TXQSTSmL: <RSCAN0_base> + $03C0_H$ + (04_H × m),
RSCAN0TXQSTSmH: <RSCAN0_base> + $03C2_H$ + (04_H × m)

RSCAN0TXQSTSmLL: <RSCAN0_base> + $03C0_H$ + (04_H × m),
RSCAN0TXQSTSmLH: <RSCAN0_base> + $03C1_H$ + (04_H × m),
RSCAN0TXQSTSmHL: <RSCAN0_base> + $03C2_H$ + (04_H × m),
RSCAN0TXQSTSmHH: <RSCAN0_base> + $03C3_H$ + (04_H × m)

Value after reset: $0000\ 0001_H$

Bit	31	30	29	28	27	26	25	24	23	22	21	20	19	18	17	16
	—	—	—	—	—	—	—	—	—	—	—	—	—	—	—	—
Value after reset	0	0	0	0	0	0	0	0	0	0	0	0	0	0	0	0
R/W	R	R	R	R	R	R	R	R	R	R	R	R	R	R	R	R

Bit	15	14	13	12	11	10	9	8	7	6	5	4	3	2	1	0
	—	—	—	—	—	—	—	—	—	—	—	—	—	TXQIF	TXQFLL	TXQEMP
Value after reset	0	0	0	0	0	0	0	0	0	0	0	0	0	0	0	1
R/W	R	R	R	R	R	R	R	R	R	R	R	R	R	R/W*1	R	R

Note 1. The only effective value for writing to this flag bit is 0, which clears the bit. Otherwise writing to the bit results in retention of its state.

Table 17.76 RSCAN0TXQSTSm Register Contents

Bit Position	Bit Name	Function
31 to 13	Reserved	When read, the value after reset is read. When writing, write the value after reset.
12 to 8	Reserved	When read, an undefined value is read. When writing, write the value after reset.
7 to 3	Reserved	When read, the value after reset is read. When writing, write the value after reset.
2	TXQIF	Transmit Queue Interrupt Request Flag 0: No transmit queue interrupt request is present. 1: A transmit queue interrupt request is present.
1	TXQFLL	Transmit Queue Full Status Flag 0: The transmit queue is not full. 1: The transmit queue is full.
0	TXQEMP	Transmit Queue Empty Status Flag 0: The transmit queue contains messages. 1: The transmit queue contains no message (transmit queue empty).

TXQIF Flag

The TXQIF flag is set to 1 when the event specified by the TXQIM bit in the RSCAN0TXQCCm register has occurred.

The TXQIF flag is cleared to 0 in channel reset mode or by writing 0 to this flag. This flag is not cleared to 0 by setting the TXQE bit in the RSCAN0TXQCCm register to 0 (the transmit queue is not used).

TXQFLL Flag

The TXQFLL flag is set to 1 when the number of messages set for the transmit queue matches the transmit queue depth set by the TXQDC[3:0] bits in the RSCAN0TXQCCm register.

This flag is cleared to 0 in any of the following cases.

- The number of messages set for the transmit queue is smaller than the transmit queue depth set by the TXQDC[3:0] bits.
- In channel reset mode

TXQEMP Flag

The TXQEMP flag is cleared to 0 when even a single message is set for the transmit queue.

This flag is set to 1 in any of the following cases.

- The TXQE bit is set to 0 (the transmit queue is not used).
- The transmit queue becomes empty.
- In channel reset mode

17.3.57 RSCAN0TXQPCTRm — Transmit Queue Pointer Control Register (m = 0 to 2)

Access: RSCAN0TXQPCTRm registers can only be written in 32-bit units
RSCAN0TXQPCTRmL, RSCAN0TXQPCTRmH registers can only be written in 16-bit units
RSCAN0TXQPCTRmLL, RSCAN0TXQPCTRmLH, RSCAN0TXQPCTRmHL, RSCAN0TXQPCTRmHH registers can only be written in 8-bit units

Address: RSCAN0TXQPCTRm: <RSCAN0_base> + $03E0_H$ + (04_H × m)

RSCAN0TXQPCTRmL: <RSCAN0_base> + $03E0_H$ + (04_H × m),
RSCAN0TXQPCTRmH: <RSCAN0_base> + $03E2_H$ + (04_H × m)

RSCAN0TXQPCTRmLL: <RSCAN0_base> + $03E0_H$ + (04_H × m),
RSCAN0TXQPCTRmLH: <RSCAN0_base> + $03E1_H$ + (04_H × m),
RSCAN0TXQPCTRmHL: <RSCAN0_base> + $03E2_H$ + (04_H × m),
RSCAN0TXQPCTRmHH: <RSCAN0_base> + $03E3_H$ + (04_H × m)

Value after reset: $0000\ 0000_H$

Bit	31	30	29	28	27	26	25	24	23	22	21	20	19	18	17	16
	—	—	—	—	—	—	—	—	—	—	—	—	—	—	—	—
Value after reset	0	0	0	0	0	0	0	0	0	0	0	0	0	0	0	0
R/W	R	R	R	R	R	R	R	R	R	R	R	R	R	R	R	R

Bit	15	14	13	12	11	10	9	8	7	6	5	4	3	2	1	0
	—	—	—	—	—	—	—	—	TXQPC[7:0]							
Value after reset	0	0	0	0	0	0	0	0	0	0	0	0	0	0	0	0
R/W	R	R	R	R	R	R	R	R	W	W	W	W	W	W	W	W

Table 17.77 RSCAN0TXQPCTRm Register Contents

Bit Position	Bit Name	Function
31 to 8	Reserved	When read, the value after reset is returned. When writing, write the value after reset.
7 to 0	TXQPC[7:0]	Transmit Queue Pointer Control Writing FF_H to these bits moves the write pointer of the transmit queue to the next queue buffer.

TXQPC[7:0] Bits

Writing FF_H to the TXQPC[7:0] bits moves the write pointer to the next transmit queue buffer and generates a transmit request of the message. Write transmit messages to the RSCAN0TMIDp, RSCAN0TMPTRp, RSCAN0TMDF0p, and RSCAN0TMDF1p registers (p = m × 16 + 15) before writing FF_H to the TXQPC[7:0] bits.

When writing FF_H to these bits, make sure that the TXQE bit in the RSCAN0TXQCCm register is set to 1 (the transmit queue is used) and the TXQFLL flag in the RSCAN0TXQSTSm register is 0 (he transmit queue is not full).

17.3.58 RSCAN0THLCCm — Transmit History Configuration and Control Register (m = 0 to 2)

Access: RSCAN0THLCCm register can be read/written in 32-bit units
RSCAN0THLCCmL, RSCAN0THLCCmH registers can be read/written in 16-bit units
RSCAN0THLCCmLL, RSCAN0THLCCmLH, RSCAN0THLCCmHL, RSCAN0THLCCmHH registers can be read/written in 8-bit units

Address: RSCAN0THLCCm: <RSCAN0_base> + 0400_H + (04_H × m)

RSCAN0THLCCmL: <RSCAN0_base> + 0400_H + (04_H × m),
RSCAN0THLCCmH: <RSCAN0_base> + 0402_H + (04_H × m)

RSCAN0THLCCmLL: <RSCAN0_base> + 0400_H + (04_H × m),
RSCAN0THLCCmLH: <RSCAN0_base> + 0401_H + (04_H × m),
RSCAN0THLCCmHL: <RSCAN0_base> + 0402_H + (04_H × m),
RSCAN0THLCCmHH: <RSCAN0_base> + 0403_H + (04_H × m)

Value after reset: $0000\ 0000_H$

Bit	31	30	29	28	27	26	25	24	23	22	21	20	19	18	17	16
	—	—	—	—	—	—	—	—	—	—	—	—	—	—	—	—
Value after reset	0	0	0	0	0	0	0	0	0	0	0	0	0	0	0	0
R/W	R	R	R	R	R	R	R	R	R	R	R	R	R	R	R	R

Bit	15	14	13	12	11	10	9	8	7	6	5	4	3	2	1	0
	—	—	—	—	—	THLDTE	THLIM	THLIE	—	—	—	—	—	—	—	THLE
Value after reset	0	0	0	0	0	0	0	0	0	0	0	0	0	0	0	0
R/W	R	R	R	R	R	R/W	R/W	R/W	R	R	R	R	R	R	R	R/W

Table 17.78 RSCAN0THLCCm Register Contents

Bit Position	Bit Name	Function
31 to 11	Reserved	When read, the value after reset is read. When writing, write the value after reset.
10	THLDTE	Transmit History Target Buffer Select 0: Entry from transmit/receive FIFO buffers and transmit queue 1: Entry from transmit buffers, transmit/receive FIFO buffers, and transmit queue
9	THLIM	Transmit History Interrupt Source Select 0: When 12 sets of data have been stored in the transmit history buffer 1: When a single set of transmit history data has been stored
8	THLIE	Transmit History Interrupt Enable 0: Transmit history interrupt is disabled. 1: Transmit history interrupt is enabled.
7 to 1	Reserved	When read, the value after reset is read. When writing, write the value after reset.
0	THLE	Transmit History Buffer Enable 0: Transmit history buffer is not used. 1: Transmit history buffer is used.

THLDTE Bit

When this bit is set to 0, the transmit history data of messages transmitted from transmit/receive FIFO buffers and the transmit queue is stored in the transmit history buffer. When this bit is set to 1, the transmit history data of messages transmitted from transmit buffers, transmit/receive FIFO buffers, and the transmit queue is stored in the transmit history buffer.

Modify this bit only in channel reset mode.

THLIM Bit

This bit is used to select a transmit history interrupt source.

Modify this bit only in channel reset mode.

THLIE Bit

When the THLIE bit is set to 1 and the source selected by the THLIM bit has occurred, a transmit history interrupt request is generated. Modify the THLIE bit only when the THLE bit set to 0.

THLE Bit

Setting this bit to 1 makes the transmit history buffer available. When data transmission from the buffer selected by the THLDTE bit has been completed, the transmit history data of transmit messages is stored in the transmit history buffer.

Modify this bit in channel communication mode or channel halt mode. This bit is cleared to 0 in channel reset mode.

17.3.59 RSCAN0THLSTSm — Transmit History Status Register (m = 0 to 2)

Access: RSCAN0THLSTSm register can be read/written in 32-bit units
RSCAN0THLSTSmL, RSCAN0THLSTSmH register can be read/written in 16-bit units
RSCAN0THLSTSmLL, RSCAN0THLSTSmLH, RSCAN0THLSTSmHL, RSCAN0THLSTSmHH registers can be read/written in 8-bit units

Address: RSCAN0THLSTSm: <RSCAN0_base> + 0420_H + (04_H × m)

RSCAN0THLSTSmL: <RSCAN0_base> + 0420_H + (04_H × m),
RSCAN0THLSTSmH: <RSCAN0_base> + 0422_H + (04_H × m)

RSCAN0THLSTSmLL: <RSCAN0_base> + 0420_H + (04_H × m),
RSCAN0THLSTSmLH: <RSCAN0_base> + 0421_H + (04_H × m),
RSCAN0THLSTSmHL: <RSCAN0_base> + 0422_H + (04_H × m),
RSCAN0THLSTSmHH: <RSCAN0_base> + 0423_H + (04_H × m)

Value after reset: $0000\ 0001_H$

Bit	31	30	29	28	27	26	25	24	23	22	21	20	19	18	17	16
	—	—	—	—	—	—	—	—	—	—	—	—	—	—	—	—
Value after reset	0	0	0	0	0	0	0	0	0	0	0	0	0	0	0	0
R/W	R	R	R	R	R	R	R	R	R	R	R	R	R	R	R	R

Bit	15	14	13	12	11	10	9	8	7	6	5	4	3	2	1	0
	—	—	—	THLMC[4:0]					—	—	—	—	THLIF	THLELT	THLFLL	THLEMP
Value after reset	0	0	0	0	0	0	0	0	0	0	0	0	0	0	0	1
R/W	R	R	R	R	R	R	R	R	R	R	R	R	R/W*1	R/W*1	R	R

Note 1. The only effective value for writing to this flag bit is 0, which clears the bit. Otherwise writing to the bit results in retention of its state.

Table 17.79 RSCAN0THLSTSm Register Contents

Bit Position	Bit Name	Function
31 to 13	Reserved	When read, the value after reset is read. When writing, write the value after reset.
12 to 8	THLMC[4:0]	Transmit History Buffer Unread Data Counter These bits indicate the number of unread data sets stored in the transmit history buffer.
7 to 4	Reserved	When read, the value after reset is read. When writing, write the value after reset.
3	THLIF	Transmit History Interrupt Request Flag 0: No transmit history interrupt request is present. 1: A transmit history interrupt request is present.
2	THLELT	Transmit History Buffer Overflow Flag 0: Transmit history buffer overflow has not occurred. 1: Transmit history buffer overflow has occurred.
1	THLFLL	Transmit history Buffer Full Status Flag 0: Transmit history buffer is not full. 1: Transmit history buffer is full.
0	THLEMP	Transmit History Buffer Empty Status Flag 0: Transmit history buffer contains unread data. 1: Transmit history buffer contains no unread data (buffer empty).

THLMC[4:0] Bits

These bits indicate the number of unread data sets stored in the transmit history buffer.

THLIF Flag

The THLIF flag is set to 1 when the interrupt source specified with the THLIM bit in the RSCAN0THLCCm register occurs.

This flag is cleared to 0 in channel reset mode or by the program writing 0 to this flag.

To clear the flags of the register to 0, the program must write 0 to the corresponding flag to be cleared. When writing 0, using a store instruction, set the bit to be set to “0” to “0”, and the bits not to be set to “0” to “1”.

THLELT Flag

The THLELT flag is set to 1 when an attempt is made to store new transmit history data while the transmit history buffer is full. In this case, the new data is discarded. This flag becomes 0 in channel reset mode or by the program writing 0 to this flag.

To clear the flags of the register to 0, the program must write 0 to the corresponding flag to be cleared. When writing 0, using a store instruction, set the bit to be set to “0” to “0”, and the bits not to be set to “0” to “1”.

THLFLL Flag

The THLFLL flag is set to 1 when 16 data sets have been stored in the transmit history buffer, and is cleared to 0 when the number of data sets stored in the transmit history buffer has decreased to less than 16. This bit is also cleared to 0 in channel reset mode or when the THLE bit in the RSCAN0THLCCm register is set to 0 (transmit history buffer is not used).

THLEMP Flag

The THLEMP flag is cleared to 0 when even a single set of transmit history data has been stored in the transmit history buffer.

This flag is set to 1 when all the data in the transmit history buffer has been read. This flag is also set to 1 in channel reset mode or when the THLE bit in the RSCAN0THLCCm register is set to 0 (transmit history buffer is not used).

NOTE

To clear THLIF or THLELT flag to 0, the program must write 0. When writing, use a store instruction to write “0” to the given flag and “1” to other flags.

17.3.60 RSCAN0THLACCm — Transmit History Access Register (m = 0 to 2)

Access: RSCAN0THLACCm register can be read only in 32-bit units
RSCAN0THLACCmL, RSCAN0THLACCmH registers can be read only in 16-bit units
RSCAN0THLACCmLL, RSCAN0THLACCmLH, RSCAN0THLACCmHL, RSCAN0THLACCmHH registers can be read only in 8-bit units

Address: RSCAN0THLACCm: <RSCAN0_base> + 1800_H + (04_H × m)

RSCAN0THLACCmL: <RSCAN0_base> + 1800_H + (04_H × m),
RSCAN0THLACCmH: <RSCAN0_base> + 1802_H + (04_H × m)

RSCAN0THLACCmLL: <RSCAN0_base> + 1800_H + (04_H × m),
RSCAN0THLACCmLH: <RSCAN0_base> + 1801_H + (04_H × m),
RSCAN0THLACCmHL: <RSCAN0_base> + 1802_H + (04_H × m),
RSCAN0THLACCmHH: <RSCAN0_base> + 1803_H + (04_H × m)

Value after reset: $0000\ 0000_H$

Bit	31	30	29	28	27	26	25	24	23	22	21	20	19	18	17	16
	—	—	—	—	—	—	—	—	—	—	—	—	—	—	—	—
Value after reset	0	0	0	0	0	0	0	0	0	0	0	0	0	0	0	0
R/W	R	R	R	R	R	R	R	R	R	R	R	R	R	R	R	R

Bit	15	14	13	12	11	10	9	8	7	6	5	4	3	2	1	0
	TID[7:0]								—	BN[3:0]				BT[2:0]		
Value after reset	0	0	0	0	0	0	0	0	0	0	0	0	0	0	0	0
R/W	R	R	R	R	R	R	R	R	R	R	R	R	R	R	R	R

Table 17.80 RSCAN0THLACCm Register Contents

Bit Position	Bit Name	Function
31 to 16	Reserved	When read, the value after reset is returned.
15 to 8	TID[7:0]	Label Data The label information of stored data can be read.
7	Reserved	When read, the value after reset is returned.
6 to 3	BN[3:0]	Buffer Number Data The buffer number of transmit source (transmit buffer, transmit/receive FIFO or transmit queue) can be read.
2 to 0	BT[2:0]	Buffer Type Data b2 b1 b0 0 0 1: Transmit buffer 0 1 0: Transmit FIFO buffer 1 0 0: Transmit queue

TID[7:0] Bits

These bits indicate the label information of transmit history data stored in the transmit history buffer.

BN[3:0] Bits

These bits indicate the transmit source buffer number in the transmit history data stored in the transmit history buffer.

BT[2:0] Bits

These bits indicate the type of the transmit source buffer in the transmit history data stored in the transmit history buffer.

17.3.61 RSCAN0THLPCTRm — Transmit History Pointer Control Register (m = 0 to 2)

Access: RSCAN0THLPCTRm register can only be written in 32-bit units
RSCAN0THLPCTRmL, RSCAN0THLPCTRmH registers can only be written in 16-bit units
RSCAN0THLPCTRmLL, RSCAN0THLPCTRmLH, RSCAN0THLPCTRmHL, RSCAN0THLPCTRmHH registers can only be written in 8-bit units

Address: RSCAN0THLPCTRm: <RSCAN0_base> + 0440_H + (04_H × m)

RSCAN0THLPCTRmL: <RSCAN0_base> + 0440_H + (04_H × m),
RSCAN0THLPCTRmH: <RSCAN0_base> + 0442_H + (04_H × m)

RSCAN0THLPCTRmLL: <RSCAN0_base> + 0440_H + (04_H × m),
RSCAN0THLPCTRmLH: <RSCAN0_base> + 0441_H + (04_H × m),
RSCAN0THLPCTRmHL: <RSCAN0_base> + 0442_H + (04_H × m),
RSCAN0THLPCTRmHH: <RSCAN0_base> + 0443_H + (04_H × m)

Value after reset: $0000\ 0000_H$

Bit	31	30	29	28	27	26	25	24	23	22	21	20	19	18	17	16
	—	—	—	—	—	—	—	—	—	—	—	—	—	—	—	—
Value after reset	0	0	0	0	0	0	0	0	0	0	0	0	0	0	0	0
R/W	R	R	R	R	R	R	R	R	R	R	R	R	R	R	R	R

Bit	15	14	13	12	11	10	9	8	7	6	5	4	3	2	1	0
	—	—	—	—	—	—	—	—	THLPC[7:0]							
Value after reset	0	0	0	0	0	0	0	0	0	0	0	0	0	0	0	0
R/W	R	R	R	R	R	R	R	R	W	W	W	W	W	W	W	W

Table 17.81 RSCAN0THLPCTRm Register Contents

Bit Position	Bit Name	Function
31 to 8	Reserved	When read, the value after reset is returned. When writing, write the value after reset.
7 to 0	THLPC[7:0]	Transmit History List Pointer Control Writing FF_H to these bits moves the read pointer to the next unread data in the transmit history buffer.

THLPC[7:0] Bits

When the THLPC[7:0] bits are set to FF_H, the read pointer moves to the next data in the transmit history buffer. At this time, the THLMC[4:0] (transmit history buffer unread data counter) value in the RSCAN0THLSTSm register is decremented. Write FF_H to the THLPC[7:0] bits after reading from the RSCAN0THLACCm register.

When writing FF_H to these bits, make sure that the THLE bit in the RSCAN0THLCCm register is set to 1 (transmit history buffer is used) and the THLEMP flag in the RSCAN0THLSTSm register is 0.

17.3.62 RSCAN0GTSTCFG — Global Test Configuration Register

Access: RSCAN0GTSTCFG register can be read/written in 32-bit units
RSCAN0GTSTCFGL, RSCAN0GTSTCFGH registers can be read/written in 16-bit units
RSCAN0GTSTCFGLL, RSCAN0GTSTCFGLH, RSCAN0GTSTCFGHL, RSCAN0GTSTCFGHH registers can be read/written in 8-bit units

Address: RSCAN0GTSTCFG: <RSCAN0_base> + 0468_H

RSCAN0GTSTCFGL: <RSCAN0_base> + 0468_H, RSCAN0GTSTCFGH: <RSCAN0_base> + $046A_H$

RSCAN0GTSTCFGLL: <RSCAN0_base> + 0468_H, RSCAN0GTSTCFGLH: <RSCAN0_base> + 0469_H, RSCAN0GTSTCFGHL: <RSCAN0_base> + $046A_H$, RSCAN0GTSTCFGHH: <RSCAN0_base> + $046B_H$

Value after reset: $0000\ 0000_H$

Bit	31	30	29	28	27	26	25	24	23	22	21	20	19	18	17	16
	—	—	—	—	—	—	—	—	—	RTMPS[6:0]						
Value after reset	0	0	0	0	0	0	0	0	0	0	0	0	0	0	0	0
R/W	R	R	R	R	R	R	R	R	R	R/W	R/W	R/W	R/W	R/W	R/W	R/W

Bit	15	14	13	12	11	10	9	8	7	6	5	4	3	2	1	0
	—	—	—	—	—	—	—	—	—	—	—	—	—	C2ICBCE	C1ICBCE	C0ICBCE
Value after reset	0	0	0	0	0	0	0	0	0	0	0	0	0	0	0	0
R/W	R	R	R	R	R	R	R	R	R	R	R	R	R	R/W	R/W	R/W

Table 17.82 RSCAN0GTSTCFG Register Contents

Bit Position	Bit Name	Function
31 to 23	Reserved	When read, the value after reset is read. When writing, write the value after reset.
22 to 16	RTMPS[6:0]	RAM Test Page Configuration Set a value within a range of page 0 (00_H) to page 28 ($1C_H$).
15 to 3	Reserved	When read, the value after reset is read. When writing, write the value after reset.
2	C2ICBCE	CAN2 Inter-Channel Communication Test Enable 0: CAN2 inter-channel communication test is disabled. 1: CAN2 inter-channel communication test is enabled.
1	C1ICBCE	CAN1 Inter-Channel Communication Test Enable 0: CAN1 inter-channel communication test is disabled. 1: CAN1 inter-channel communication test is enabled.
0	C0ICBCE	CAN0 Inter-Channel Communication Test Enable 0: CAN0 inter-channel communication test is disabled. 1: CAN0 inter-channel communication test is enabled.

Modify the RSCAN0GTSTCFG register only in global test mode.

RTMPS[6:0] Bits

These bits are used to set the RAM test target page number for RAM test. Set a value in the range of 00_H to $1C_H$, inclusive.

C2ICBCE Bit

Setting this bit to 1 enables the channel 2 inter-channel communication test.

C1ICBCE Bit

Setting this bit to 1 enables the channel 1 inter-channel communication test.

C0ICBCE Bit

Setting this bit to 1 enables the channel 0 inter-channel communication test.

17.3.63 RSCAN0GTSTCTR — Global Test Control Register

Access: RSCAN0GTSTCTR register can be read/written in 32-bit units
RSCAN0GTSTCTRL, RSCAN0GTSTCTRH registers can be read/written in 16-bit units
RSCAN0GTSTCTRLL, RSCAN0GTSTCTRLH, RSCAN0GTSTCTRHL, RSCAN0GTSTCTRHH registers can be read/written in 8-bit units

Address: RSCAN0GTSTCTR: <RSCAN0_base> + $046C_H$

RSCAN0GTSTCTRL: <RSCAN0_base> + $046C_H$, RSCAN0GTSTCTRH: <RSCAN0_base> + $046E_H$

RSCAN0GTSTCTRLL: <RSCAN0_base> + $046C_H$, RSCAN0GTSTCTRLH: <RSCAN0_base> + $046D_H$, RSCAN0GTSTCTRHL: <RSCAN0_base> + $046E_H$, RSCAN0GTSTCTRHH: <RSCAN0_base> + $046F_H$

Value after reset: $0000\ 0000_H$

Bit	31	30	29	28	27	26	25	24	23	22	21	20	19	18	17	16
	—	—	—	—	—	—	—	—	—	—	—	—	—	—	—	—
Value after reset	0	0	0	0	0	0	0	0	0	0	0	0	0	0	0	0
R/W	R	R	R	R	R	R	R	R	R	R	R	R	R	R	R	R

Bit	15	14	13	12	11	10	9	8	7	6	5	4	3	2	1	0
	—	—	—	—	—	—	—	—	—	—	—	—	—	RTME	—	ICBCTME
Value after reset	0	0	0	0	0	0	0	0	0	0	0	0	0	0	0	0
R/W	R	R	R	R	R	R	R	R	R	R	R	R	R	R/W	R	R/W

Table 17.83 RSCAN0GTSTCTR Register Contents

Bit Position	Bit Name	Function
31 to 3	Reserved	When read, the value after reset is read. When writing, write the value after reset.
2	RTME	RAM Test Enable 0: RAM test is disabled. 1: RAM test is enabled.
1	Reserved	When read, the value after reset is read. When writing, write the value after reset.
0	ICBCTME	Communication Test between Channels Enable 0: Communication test between channels disabled 1: Communication test between channels enabled

RTME Bit

Setting this bit to 1 enables the RAM test. Modify this bit only in global test mode (see **Figure 17.36**).

1. Set the GMDC[1:0] bits in the RSCAN0GCTR register to 10_B (Global test mode).
2. Set the RTME bit to 1.
3. Check that the RTME bit is set to 1.

ICBCTME Bit

When this bit is set to 1, a communication test is enabled between the channels for which the CmICBCE bit (m = 0 to 2) in the RSCAN0GTSTCFG register has been set to 1. Modify the ICBCTME bit only in global test mode.

17.3.64 RSCAN0GLOCKK — Global Lock Key Register

Access: RSCAN0GLOCKK register can be write only in 32-bit units.
RSCAN0GLOCKKL, RSCAN0GLOCKKH registers can be write only in 16-bit units.

Address: RSCAN0GLOCKK: <RSCAN0_base> + $047C_H$

RSCAN0GLOCKKL: <RSCAN0_base> + $047C_H$, RSCAN0GLOCKKH: <RSCAN0_base> + $047E_H$

Value after reset: $0000\ 0000_H$

Bit	31	30	29	28	27	26	25	24	23	22	21	20	19	18	17	16
	—	—	—	—	—	—	—	—	—	—	—	—	—	—	—	—
Value after reset	0	0	0	0	0	0	0	0	0	0	0	0	0	0	0	0
R/W	R	R	R	R	R	R	R	R	R	R	R	R	R	R	R	R

Bit	15	14	13	12	11	10	9	8	7	6	5	4	3	2	1	0
	LOCK[15:0]															
Value after reset	0	0	0	0	0	0	0	0	0	0	0	0	0	0	0	0
R/W	W*1	W*1	W*1	W*1	W*1	W*1	W*1	W*1	W*1	W*1	W*1	W*1	W*1	W*1	W*1	W*1

Note 1. Writing to these bits is effective only when the RS-CAN module is in global test mode.

Table 17.84 RSCAN0GLOCKK Register Contents

Bit Position	Bit Name	Function
31 to 16	Reserved	When read, the value after reset is returned. When writing, write the value after reset.
15 to 0	LOCK[15:0]	Lock Key These bits are key bits to release protection of test mode.

The RSCAN0GLOCKK register releases protection of special test bits and is write only.

For the protection release data, see **Section 17.10.4.2, Procedure for Releasing the Protection**.

LOCK[15:0] Bits

Writing the protection release data to the LOCK[15:0] bits in succession enables writing 1 to the RTME bit in the RSCAN0GTSTCTR register.

After the protection has been released, writing to the I/O register area (<RCAN0_base> + 0000_H to <RCAN0_base> + $04FF_H$) of the CAN (except the RAM) enables the protection again.

Reading from the I/O register area of the CAN or reading from/wring to other areas does not enable the protection.

17.3.65 RSCAN0RPGACCr — RAM Test Page Access Register (r = 0 to 63)

Access: RSCAN0RPGACCr register can be read/written in 32-bit units
RSCAN0RPGACCrL, RSCAN0RPGACCrH registers can be read/written in 16-bit units
RSCAN0RPGACCrLL, RSCAN0RPGACCrLH, RSCAN0RPGACCrHL, RSCAN0RPGACCrHH registers can be read/written in 8-bit units

Address: RSCAN0RPGACCr: <RSCAN0_base> + 1900_H + (04_H × r)

RSCAN0RPGACCrL: <RSCAN0_base> + 1900_H + (04_H × r),
RSCAN0RPGACCrH: <RSCAN0_base> + 1902_H + (04_H × r)

RSCAN0RPGACCrLL: <RSCAN0_base> + 1900_H + (04_H × r),
RSCAN0RPGACCrLH: <RSCAN0_base> + 1901_H + (04_H × r),
RSCAN0RPGACCrHL: <RSCAN0_base> + 1902_H + (04_H × r),
RSCAN0RPGACCrHH: <RSCAN0_base> + 1903_H + (04_H × r)

Value after reset: $0000\ 0000_H$

Bit	31	30	29	28	27	26	25	24	23	22	21	20	19	18	17	16
	RDTA[31:16]															
Value after reset	0	0	0	0	0	0	0	0	0	0	0	0	0	0	0	0
R/W	R/W	R/W	R/W	R/W	R/W	R/W	R/W	R/W	R/W	R/W	R/W	R/W	R/W	R/W	R/W	R/W

Bit	15	14	13	12	11	10	9	8	7	6	5	4	3	2	1	0
	RDTA[15:0]															
Value after reset	0	0	0	0	0	0	0	0	0	0	0	0	0	0	0	0
R/W	R/W	R/W	R/W	R/W	R/W	R/W	R/W	R/W	R/W	R/W	R/W	R/W	R/W	R/W	R/W	R/W

Table 17.85 RSCAN0RPGACCr Register Contents

Bit Position	Bit Name	Function
31 to 0	RDTA [31:0]	RAM Data Test Access Data can be read and written in RSCAN RAM.

Modify the RSCAN0RPGACCr register in global test mode with the RTME bit in the RSCAN0GTSTCTR register set to 1 (RAM test is enabled).

The RSCAN0RPGACCr register is readable and writable when the RTME bit is set to 1.

17.4 Interrupt Sources

The RS-CAN module has 11 interrupts (2 + 3 × m) that are grouped into global interrupts and channel interrupts.

- Global interrupts (2 sources):
  Receive FIFO interrupt (1 source)
  Global error interrupt (1 source)
- Channel interrupts (3 sources/channel):
  CANm transmit interrupt (m = 0 to 2)
  - CANm transmit complete interrupt
  - CANm transmit abort interrupt
  - CANm transmit/receive FIFO transmit complete interrupt (in transmit mode, gateway mode)
  - CANm transmit history interrupt
  - CANm transmit queue Interrupt

  CANm transmit/receive FIFO receive complete interrupt (in receive mode, gateway mode)
  CANm error interrupt

When an interrupt request is generated, the corresponding interrupt request flag is set to 1 (interrupt request present). In that case, when the interrupt enable bit is set to 1 (enabling interrupts), an interrupt request is output from the RS-CAN module. (Generation of interrupts also depends on the interrupt control register settings of the interrupt controller.)

Setting the interrupt request flag to 0 (no interrupt request present) or setting the interrupt enable bit to 0 (disabling interrupts) clears the current interrupt request. The current interrupt request is still output until the interrupt request flag is cleared.

Table 17.86 lists the CAN interrupt sources. **Figure 17.2** shows the CAN global interrupt block diagram. **Figure 17.3** shows the CAN channel interrupt block diagram.

Table 17.86 List of CAN Interrupt Sources

Interrupt Source			Corresponding Interrupt Request Flag	Corresponding Interrupt Enable Bit
Global interrupts	Receive FIFO	Receive FIFO 0	RFIF in the RSCAN0RFSTS0 register	RFIE in the RSCAN0RFCC0 register
		Receive FIFO 1	RFIF in the RSCAN0RFSTS1 register	RFIE in the RSCAN0RFCC1 register
		Receive FIFO 2	RFIF in the RSCAN0RFSTS2 register	RFIE in the RSCAN0RFCC2 register
		Receive FIFO 3	RFIF in the RSCAN0RFSTS3 register	RFIE in the RSCAN0RFCC3 register
		Receive FIFO 4	RFIF in the RSCAN0RFSTS4 register	RFIE in the RSCAN0RFCC4 register
		Receive FIFO 5	RFIF in the RSCAN0RFSTS5 register	RFIE in the RSCAN0RFCC5 register
		Receive FIFO 6	RFIF in the RSCAN0RFSTS6 register	RFIE in the RSCAN0RFCC6 register
		Receive FIFO 7	RFIF in the RSCAN0RFSTS7 register	RFIE in the RSCAN0RFCC7 register
	Global error		• DEF in the RSCAN0GERFL register • MES in the RSCAN0GERFL register • THLES in the RSCAN0GERFL register	• DEIE in the RSCAN0GCTR register • MEIE in the RSCAN0GCTR register • THLEIE in the RSCAN0GCTR register
Channel interrupts (m = 0 to 2)	CANm transmit	CANm transmit complete	TMTRF[1:0] in the RSCAN0TMSTSp register	TMIE in the RSCAN0TMIECy register
		CANm transmit abort	TMTRF[1:0] in the RSCAN0TMSTSp register	TAIE in the RSCAN0CmCTR register
		CANm transmit/receive FIFO transmit complete	CFTXIF in the RSCAN0CFSTSk register	CFTXIE in the RSCAN0CFCCk register
		CANm transmit queue	TXQIF in the RSCAN0TXQSTSm register	TXQIE in the RSCAN0TXQCCm register
		CANm transmit history	THLIF in the RSCAN0THLSTSm register	THLIE in the RSCAN0THLCCm register
	CANm transmit/receive FIFO receive complete		CFRXIF in the RSCAN0CFSTSk register	CFRXIE in the RSCAN0CFCCk register
	CANm error		• BEF in the RSCAN0CmERFL register • ALF in the RSCAN0CmERFL register • BLF in the RSCAN0CmERFL register • OVLF in the RSCAN0CmERFL register • BORF in the RSCAN0CmERFL register • BOEF in the RSCAN0CmERFL register • EPF in the RSCAN0CmERFL register • EWF in the RSCAN0CmERFL register	• BEIE in the RSCAN0CmCTR register • ALIE in the RSCAN0CmCTR register • BLIE in the RSCAN0CmCTR register • OLIE in the RSCAN0CmCTR register • BORIE in the RSCAN0CmCTR register • BOEIE in the RSCAN0CmCTR register • EPIE in the RSCAN0CmCTR register • EWIE in the RSCAN0CmCTR register

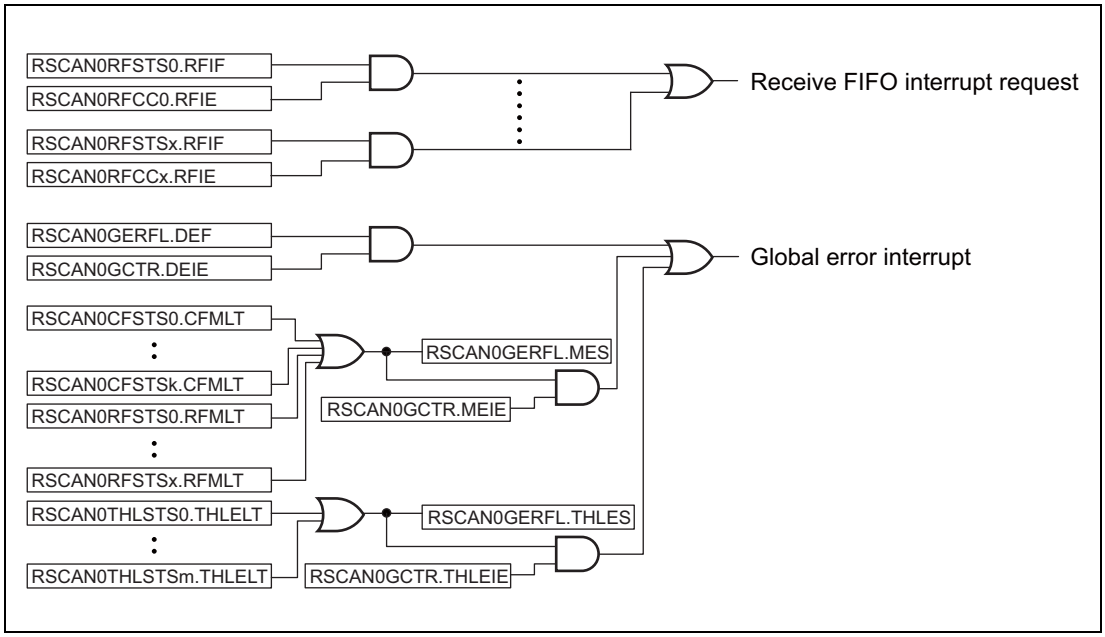

Figure 17.2 CAN Global Interrupt Block Diagram

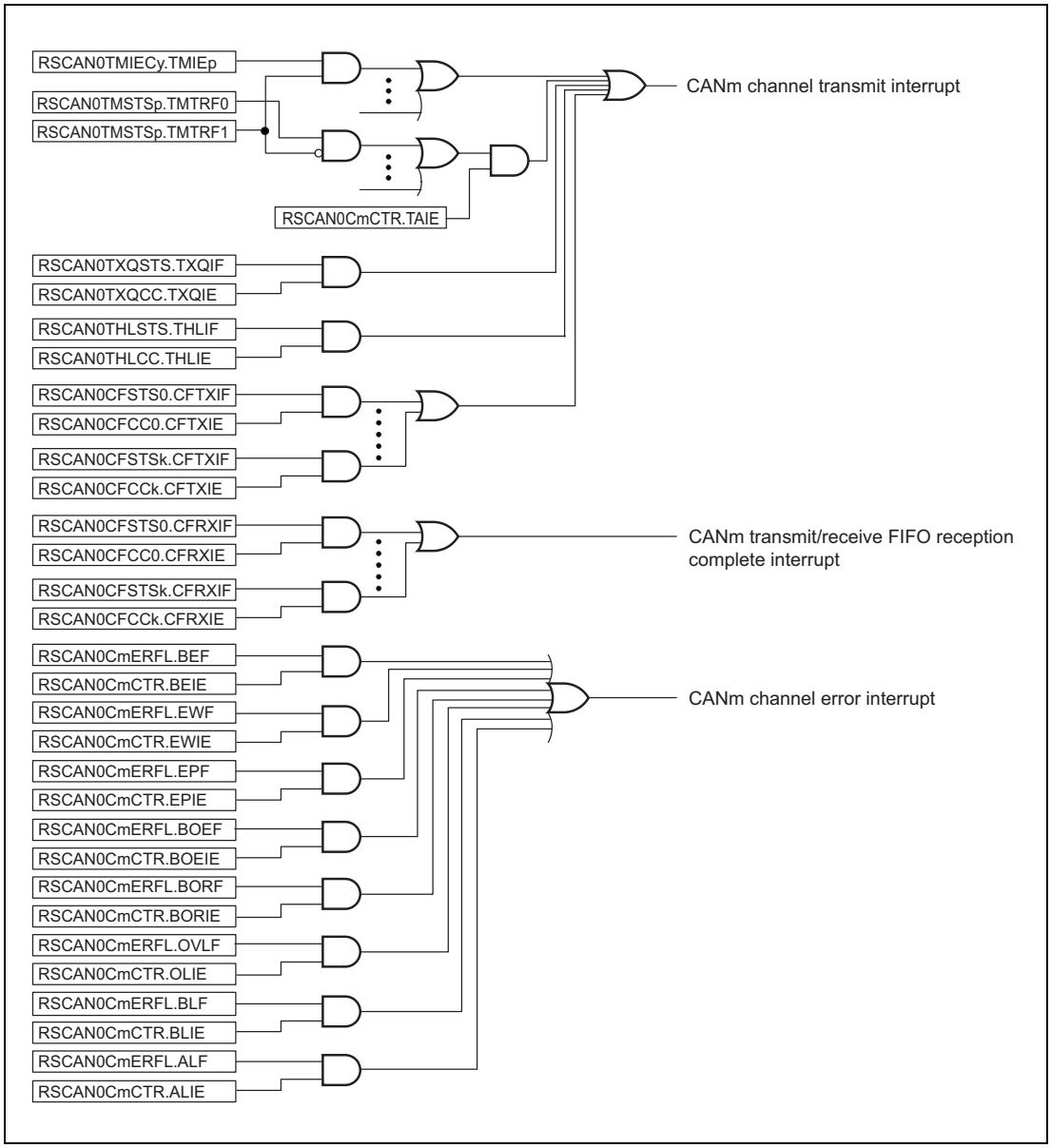

Figure 17.3 CAN Channel Interrupt Block Diagram

17.5 CAN Modes

The RS-CAN module has four global modes to control the entire RS-CAN module status and four channel modes to control individual channel status. Details of global modes are described in **Section 17.5.1, Global Modes**, and details of channel modes are described in **Section 17.5.2, Channel Modes**.

- Global stop mode: Stops the clocks of the entire module to achieve low power consumption.
- Global reset mode: Performs initial settings for the entire module.
- Global test mode: Performs test settings and performs the RAM test.
- Global operating mode: Makes the entire module operable.
- Channel stop mode: Stops the channel clock.
- Channel reset mode: Performs initial settings for the channels.
- Channel halt mode: Stops CAN communication and allows channel testing.
- Channel communication mode: Performs CAN communication.

17.5.1 Global Modes

Figure 17.4 shows the transitions of global modes.

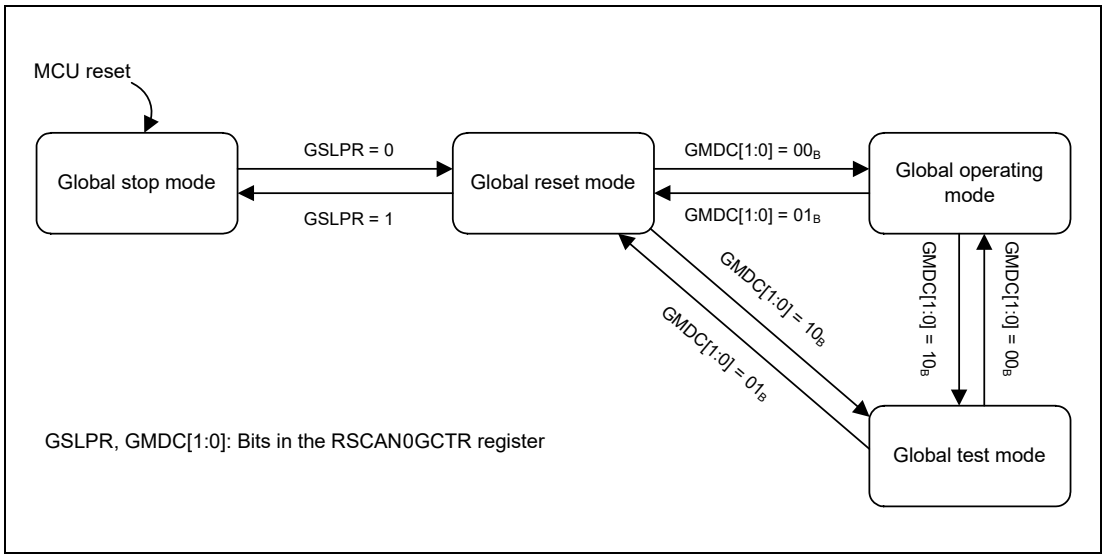

Figure 17.4 Transitions of Global Modes

In some cases, global mode transitions also force channel mode transitions. **Table 17.87** shows the channel mode transitions depending on the global mode setting dictated by the GMDC[1:0] bits and the GSLPR bit.

Table 17.87 Transitions of Channel Modes Depending on Global Mode Setting (GMDC[1:0] and GSLPR Bits)

Channel Mode before Setting	Channel Mode after Setting			
	GMDC[1:0] = 00_B GSLPR = 0 (Global Operation)	GMDC[1:0] = 10_B GSLPR = 0 (Global Test)	GMDC[1:0] = 01_B GSLPR = 0 (Global Reset)	GMDC[1:0] = 01_B GSLPR = 1 (Global Stop)
Channel communication	Channel communication	Channel halt	Channel reset	Transition prohibited
Channel halt	Channel halt	Channel halt	Channel reset	Transition prohibited
Channel reset	Channel reset	Channel reset	Channel reset	Channel stop
Channel stop	Channel stop	Channel stop	Channel stop	Channel stop

Note: GMDC[1:0], GSLPR: Bits in the RSCAN0GCTR register

Table 17.88 shows the global mode transition time.

Table 17.88 Global Mode Transition Time

Mode before Transition	Mode after Transition	Maximum Transition Time
Global stop	Global reset	Three pclk cycles
Global reset	Global stop	Three pclk cycles
Global reset	Global test	Ten pclk cycles
Global reset	Global operating	Ten pclk cycles
Global test	Global reset	Three pclk cycles
Global test	Global operating	Three pclk cycles
Global operating	Global reset	Three pclk cycles
Global operating	Global test	Two CAN frames*1

Note 1. CAN frame time of the lowest communication speed of the channels in use

17.5.1.1 Global Stop Mode

In global stop mode, clocks of the CAN do not run and therefore power consumption is reduced. CAN registers can be read, but writing data to them is prohibited. Register values are retained. Only the clock used by the CPU for writing to the GSLPR bit runs in this mode.

After the MCU is reset, the CAN module transitions to global stop mode. Setting the GSLPR bit in the RSCAN0GCTR register to 1 (in global stop mode) in global reset mode sets the CSLPR bit in each of the RSCAN0CmCTR register to 1 (channel stop mode). If all channels are forced to transition to channel stop mode, the CAN module transitions to global stop mode. The GSLPR bit should not be modified in global operating mode or global test mode.

17.5.1.2 Global Reset Mode

In global reset mode, RS-CAN module settings are performed. When the RS-CAN module transitions to global reset mode, some registers are initialized. **Table 17.91** and **Table 17.92** list the registers to be initialized.

Setting the GMDC[1:0] bits in the RSCAN0GCTR register to 01_B sets the CHMDC[1:0] bits in each of the RSCAN0CmCTR registers (m = 0 to 2) to 01_B (channel reset mode). If all channels are forced to transition to channel reset mode, the CAN module transitions to global reset mode. Channels that are already in channel reset mode or channel stop mode do not transition (because the CHMDC[1:0] bits have already been set to 01_B).

17.5.1.3 Global Test Mode

In global test mode, settings for test-related registers are performed. When the CAN module transitions to global test mode, all CAN communications are disabled.

Setting the GMDC[1:0] bits in the RSCAN0GCTR register to 10_B sets the CHMDC[1:0] bits in each of the RSCAN0CmCTR register to 10_B (channel halt mode). If all channels are forced to transition to channel halt mode, the CAN module transitions to global test mode. Channels that are in channel stop mode, channel reset mode, or channel halt mode do not transition.

17.5.1.4 Global Operating Mode

The RS-CAN module operates in global operating mode.

When the GMDC[1:0] bits in the RSCAN0GCTR register are set to 00_B, the RS-CAN module transitions to global operating mode.

17.5.2 Channel Modes

Figure 17.5 shows a channel mode state transition chart. **Table 17.89** shows the channel mode transition time.

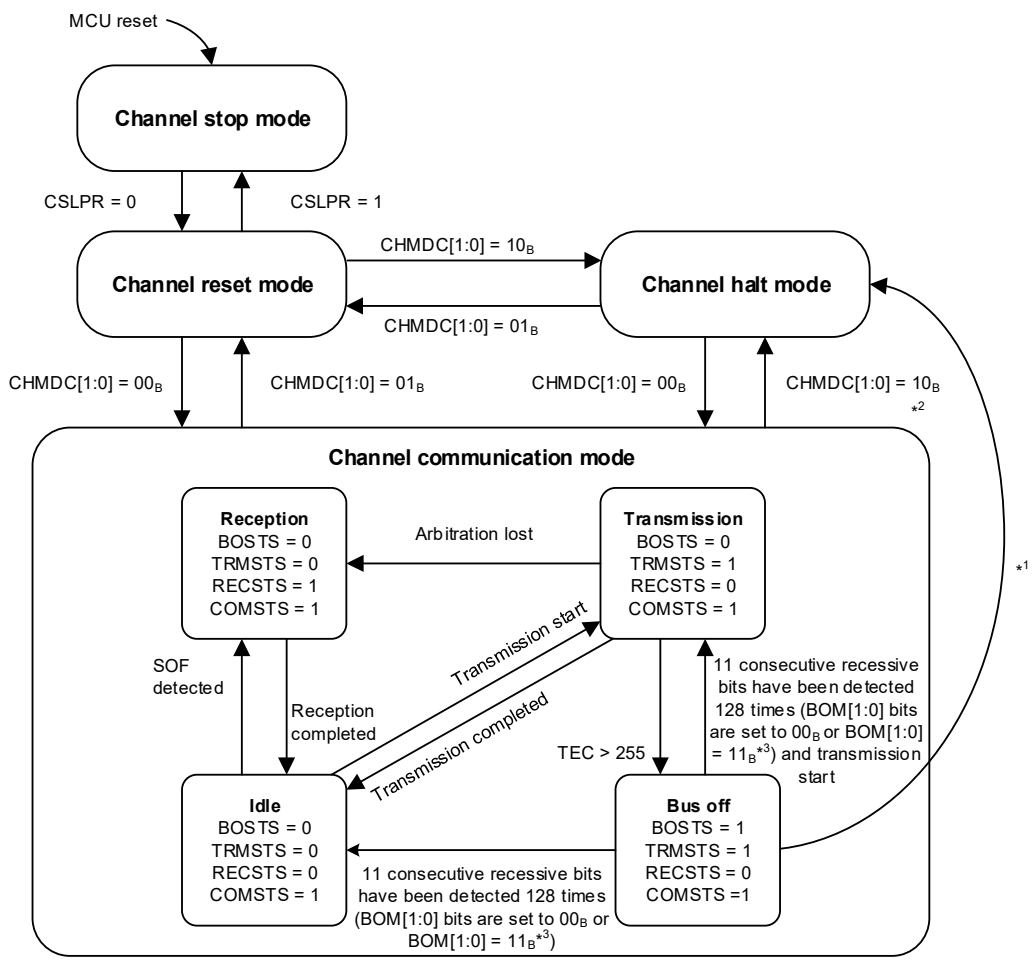

Note: CHMDC[1:0], CSLPR, BOM[1:0]: Bits in the RSCAN0CmCTR register (m = 0, 1)
BOSTS, TRMSTS, RECSTS, COMSTS: Bits in the RSCAN0CmSTS register

Note 1. Timing of transition from bus off state to channel halt mode
- When BOM[1:0] = 01_B: Transition to channel halt mode when TEC exceeds 255
- When BOM[1:0] = 10_B: Transition to channel halt mode when 11 consecutive recessive bits have been detected 128 times
- When BOM[1:0] = 11_B: Transition to channel halt mode when the CHMDC[1:0] bits are set to 10_B

Note 2. While the CAN bus is locked at the dominant level, transition to channel halt mode is not made. In that case, enter channel reset mode.

Note 3. When 11 consecutive recessive bits have been detected 128 times before setting the CHMDC[1:0] bits to 10_B

Figure 17.5 Channel Mode State Transition Chart

Table 17.89 Channel Mode Transition Time

Mode before Transition	Mode after Transition	Maximum Transition Time
Channel stop	Channel reset	Three pclk cycles
Channel reset	Channel stop	Three pclk cycles
Channel reset	Channel halt	Three CANm bit times
Channel reset	Channel communication	Two CANm bit times
Channel halt	Channel reset	Three pclk cycles
Channel halt	Channel communication	Three CANm bit times
Channel communication	Channel reset	Three pclk cycles
Channel communication	Channel halt	Two CANm frames

17.5.2.1 Channel Stop Mode

In channel stop mode, clocks are not supplied to channels and therefore power consumption is reduced. Channel-related registers can be read, but writing data to them is prohibited (except write to CSLPR bit). Register values are retained.

Each channel enters channel stop mode after the MCU is reset. Channels also transition to channel stop mode when the CSLPR bit in the RSCAN0CmCTR register (m = 0 to 2) is set to 1 (channel stop mode) in channel reset mode. The CSLPR bit should not be modified in channel communication mode and channel halt mode.

17.5.2.2 Channel Reset Mode

In channel reset mode, channel settings are performed. When a channel transitions to channel reset mode, some channel-related registers are initialized. **Table 17.91** lists the registers to be initialized.

When the CHMDC[1:0] bits in the RSCAN0CmCTR register are set to 01_B (channel reset mode) during CAN communication, communication is terminated before it is completed and the channel transitions to channel reset mode. **Table 17.90** shows the operation when the CHMDC[1:0] bits are set to 01_B (channel reset mode) during CAN communication.

17.5.2.3 Channel Halt Mode

In channel halt mode, settings for test-related registers of channels are performed. When a channel transitions to channel halt mode, CAN communication of the channel stops.

Table 17.90 shows operation when the CHMDC[1:0] bits are set to 10_B (channel halt mode) during CAN communication.

Table 17.90 Operation a Channel Transitions to Channel Reset Mode/Channel Halt Mode

Mode	During Reception	During Transmission	Bus Off State
Channel reset (CHMDC[1:0] = 01_B)	Transitions to channel reset mode before reception is completed.*1	Transitions to channel reset mode before transmission is completed.*1	Transitions to channel reset mode before bus off recovery.
Channel halt*3 (CHMDC[1:0] = 10_B)	Transitions to channel halt mode after reception is completed.*2	Transitions to channel halt mode after transmission is completed.	[When BOM[1:0] = 00_B] Transitions to channel halt mode (CHMDC[1:0] = 10_B) only after bus off recovery. [When BOM[1:0] = 01_B] Transitions to channel halt mode automatically when the condition for transition to bus off state is met. [When BOM[1:0] = 10_B] Transitions to channel halt mode automatically after bus off recovery. [When BOM[1:0] = 11_B] Transitions to channel halt mode immediately after the CHMDC[1:0] bits are set to 10_B before bus off recovery.

Note 1. To allow transition to channel reset mode after communication is completed, set the CHMDC[1:0] bits to 10_B and confirm that communication has been completed and transition to channel halt mode has been made, and then set the CHMDC[1:0] bits to 01_B.

Note 2. While the CAN bus is locked at the dominant level, transition to channel halt mode is not made. In that case, enter channel reset mode. The CAN bus status can be confirmed with the BLF flag of the RSCAN0CmERFL register that becomes 1 when dominant lock is detected.

Note 3. When the transition from channel reset mode to channel wait mode is to be made, set the RSCAN0CmCFG register in channel reset mode and then shift to channel wait mode.

17.5.2.4 Channel Communication Mode

In channel communication mode, CAN communication is performed. Each channel has the following communication states during CAN communication.

- Idle: Neither reception nor transmission is in progress.
- Reception: Receiving a message sent from another node.
- Transmission: Transmitting a message.
- Bus off: Isolated from CAN communication.

When the CHMDC[1:0] bits in the RSCAN0CmCTR register are set to 00_B, the channel transitions to channel communication mode. After that, once 11 consecutive recessive bits have been detected, the COMSTS flag in the RSCAN0CmSTS register (m = 0 to 2) is set to 1 (communication is ready) and transmission and reception are enabled on the CAN network as an active node. At this time, transmission and reception of messages can be started.

17.5.2.5 Bus Off State

A channel transitions to the bus off state according to the transmit/receive error counter increment/decrement rules of the CAN specifications.

The conditions for returning from the bus off state are determined by the BOM[1:0] bits in the RSCAN0CmCTR register.

- When BOM[1:0] = 00_B:
  Bus off recovery is compliant with the CAN specifications. After 11 consecutive recessive bits have been detected 128 times, a channel returns from the bus off state to the CAN communication ready state (error active state). At that time, the TEC[7:0] and REC[7:0] bits in the RSCAN0CmSTS register are initialized to 00_H, the BORF flag in the RSCAN0CmERFL register is set to 1 (bus off recovery is detected), and a bus off recovery interrupt request is generated. When the CHMDC[1:0] bits in the RSCAN0CmCTR register are set to 10_B (channel halt mode) in the bus off state, the channel transitions to channel halt mode after bus off recovery has been completed (11 consecutive recessive bits have been detected 128 times).
- When BOM[1:0] = 01_B:
  When a channel transitions to the bus off state, the CHMDC[1:0] bits are set to 10_B and the channel transitions to channel halt mode. At that time, the TEC[7:0] and REC[7:0] bits are initialized to 00_H, but the BORF flag is not set to 1. Also, a bus off recovery interrupt request is not generated.
- When BOM[1:0] = 10_B:
  When a channel has transitioned to the bus off state, the CHMDC[1:0] bits are set to 10_B. After bus off recovery has been completed (11 consecutive recessive bits have been detected 128 times), the channel transitions to channel halt mode. At that time, the TEC[7:0] and REC[7:0] bits are initialized to 00_H, the BORF flag is set to 1, and a bus off recovery interrupt request is generated.
- When BOM[1:0] = 11_B:
  When the CHMDC[1:0] bits are set to 10_B in the bus off state, the channel transitions to channel halt mode before bus off recovery is completed. At that time, the TEC[7:0] and REC[7:0] bits are initialized to 00_H, but the BORF flag is not set to 1. Also, a bus off recovery interrupt is not generated.
  However, the BORF flag becomes 1 and a bus off recovery interrupt request is generated if a CAN module transitions to error active state (by detecting 128 times of 11 consecutive recessive bits) before CHMDC[1:0] bits are set to 10_B.

If the RS-CAN module causes the channel to transition to channel halt mode simultaneously with a program write to the CHMDC[1:0] bits, the program write takes precedence. An automatic transition to channel halt mode when the BOM[1:0] bits are set to 01_B or 10_B is made only when the CHMDC[1:0] bits are 00_B (channel communication mode).

Furthermore, setting the RTBO bit in the RSCAN0CmCTR register to 1 allows a forced return from the bus off state. As soon as the RTBO bit is set to 1, the state changes to the error active state. After 11 consecutive recessive bits have been detected, the CAN module becomes ready for communication. In this case, the BORF flag is not set to 1 and the TEC[7:0] and REC[7:0] bits are initialized to 00_H. Write 1 to the RTBO bit only when the BOM[1:0] value is 00_B. Writing the RTBO bit to 1 in a state other than the bus off state is ignored, and the RTBO bit is immediately set to 0.

Table 17.91 Registers Initialized in Global Reset Mode or Channel Reset Mode

Register	Bit / Flag
RSCAN0CmCTR register	CTMS[1:0], CTME, CHMDC[1:0]
RSCAN0CmSTS register	CHLTSTS, EPSTS, BOSTS, TRMSTS, RECSTS, COMSTS, REC[7:0], TEC[7:0]
RSCAN0CmERFL register	CRCREG[14:0], ADERR, B0ERR, B1ERR, CERR, AERR, FERR, SERR, ALF, BLF, OVLF, BORF, BOEF, EPF, EWF, BEF
RSCAN0CFCCk register	When transmit/receive FIFO buffer is in transmit mode or gateway mode: CFE
RSCAN0CFSTSk register	When transmit/receive FIFO buffer is in transmit mode or gateway mode: CFMC[7:0], CFFLL, CFEMP, CFMLT, CFRXIF, CFTXIF
RSCAN0CFTISTS register	CFkTXIF
RSCAN0TMCp register	TMOM, TMTAR, TMTR
RSCAN0TMSTSp register	TMTARM, TMTRM, TMTRF[1:0], TMTSTS
RSCAN0TMTRSTSy register	TMTRSTSp (Bits of corresponding channel are initialized in channel reset mode.)
RSCAN0TMTARSTSy register	TMTARSTSp (Bits of corresponding channel are initialized in channel reset mode.)
RSCAN0TMTCSTSy register	TMTCSTSp (Bits of corresponding channel are initialized in channel reset mode.)
RSCAN0TMTASTSy register	TMTASTSp (Bits of corresponding channel are initialized in channel reset mode.)
RSCAN0TXQCCm register	TXQE
RSCAN0TXQSTSm register	TXQIF, TXQFLL, TXQEMP
RSCAN0THLCCm register	THLE
RSCAN0THLSTSm register	THLMC[4:0], THLIF, THLELT, THLFLL, THLEMP
RSCAN0GTINTSTS0 register	TSIFm, TAIFm, TQIFm, CFTIFm, THIFm (m = 0 to 2)

Table 17.92 Registers Initialized Only in Global Reset Mode

Register	Bit / Flag
RSCAN0GSTS register	GHLTSTS
RSCAN0GERFL register	THLES, MES, DEF
RSCAN0GTSC register	TS[15:0]
RSCAN0RMNDy register	RMNSq
RSCAN0RFCCx register	RFE
RSCAN0RFSTSx register	RFMC[7:0], RFIF, RFMLT, RFFLL, RFEMP
RSCAN0CFCCk register	When transmit/receive FIFO buffer is in receive mode: CFE
RSCAN0CFSTSk register	When transmit/receive FIFO buffer is in receive mode: CFMC[7:0], CFFLL, CFEMP, CFTXIF, CFRXIF, CFMLT
RSCAN0FESTS register	CFkEMP, RFxEMP
RSCAN0FFSTS register	CFkFLL, RFxFLL
RSCAN0FMSTS register	CFkMLT, RFxMLT
RSCAN0RFISTS register	RFxIF
RSCAN0CFRISTS register	CFkRXIF
RSCAN0GTSTCFG register	RTMPS[6:0], C0ICBCE, C1ICBCE, C2ICBCE
RSCAN0GTSTCTR register	RTME, ICBCTME

17.6 Reception Function

There are two reception types.

- Reception by receive buffers:
  Zero to 48 (16 × m) receive buffers can be shared by all channels. Since messages stored in receive buffers are overwritten at each reception, the latest receive data can always be read.
- Reception by receive FIFO buffers and transmit/receive FIFO buffers (receive mode):
  Eight receive FIFO buffers can be shared by all channels and three dedicated transmit/receive FIFO buffers are provided for each channel. Messages of up to the number of buffer stages specified with the RFDC[2:0] and CFDC[2:0] bits can be stored in FIFO buffers and can be read sequentially from the oldest.

17.6.1 Data Processing Using the Receive Rule Table

Data processing using the receive rule table allows dispatching of selected messages to the specified buffer. Data processing includes acceptance filter processing, DLC filter processing, routing processing, label addition processing, and mirror function processing.

Up to 128 receive rules can be registered per channel and up to (64 × number of channels) total receive rules can be registered in the entire module. (Up to 128 receive rules can be registered in the module that has 2 channels and up to 192 receive rules in the module that has 3 channels.) Set receive rules for each channel. Receive rules cannot be shared with other channels. If receive rules are not set, no messages can be received. **Figure 17.6** illustrates how receive rules are registered.

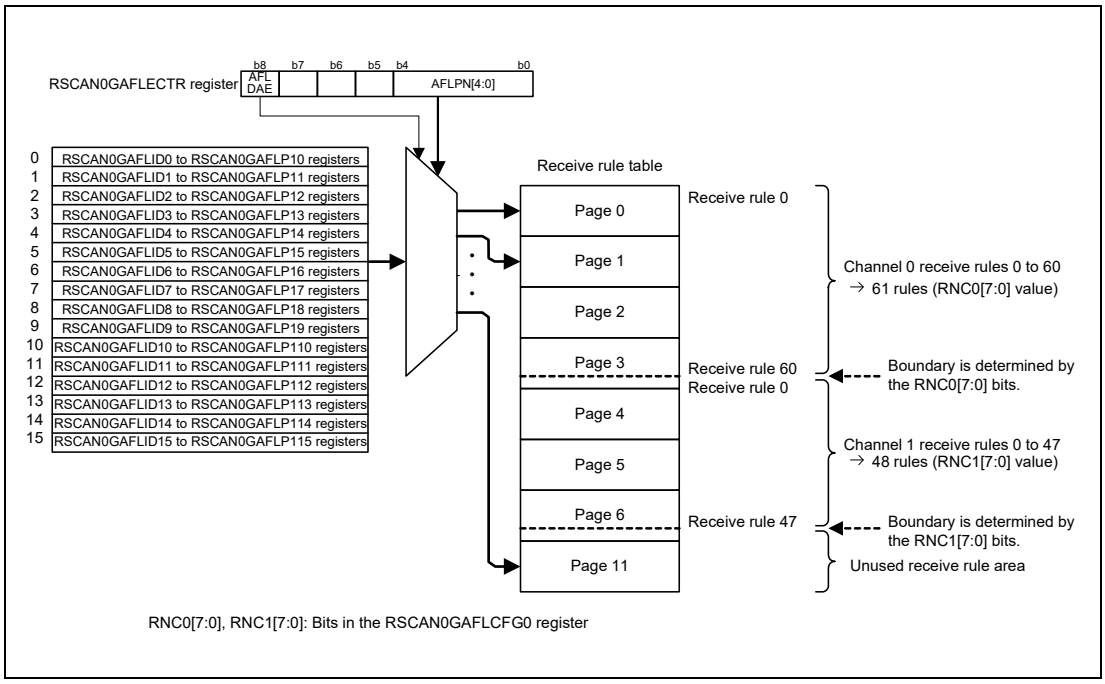

Figure 17.6 Entry of Receive Rules (for Setting Channel 0 and 1)

CAUTION

Receive rules for each channel must be set in contiguous blocks.
Channel 1 rules and channel 0 rules must be set separately.

Each receive rule consists of 16 bytes in the RSCAN0GAFLIDj, RSCAN0GAFLMj, RSCAN0GAFLP0j, and RSCAN0GAFLP1j registers (j = 0 to 15). The RSCAN0GAFLIDj register is used to set GAFLID, GAFLIDE bit, GAFLRTR bit, and the mirror function, the RSCAN0GAFLMj register is used to set mask, the RSCAN0GAFLP0j register is used to set label information to be added, DLC value, and storage receive buffer, and the RSCAN0GAFLP1j register is used to set storage FIFO buffer. Up to 16 receive rules can be set per page.

17.6.1.1 Acceptance Filter Processing

In the acceptance filter processing, the ID data, IDE bit, and RTR bit in a received message are compared with the ID data, IDE bit, and RTR bit set in the receive rule of the corresponding channel. When all these bits match, the message passes through the acceptance filter processing. The ID data, IDE bit, and RTR bit in the received message which correspond to the bits set to 0 (bits are not compared) in the RSCAN0GAFLMj register are not compared and are regarded as matched.

Check begins with the receive rule of the minimum number for the corresponding channel. When all the bits to be compared in a received message match the bits set in the receive rule or when all the receive rules are compared without any match, filter processing stops. If there is no matching receive rule, the received message is not stored in the receive buffer or FIFO buffer.

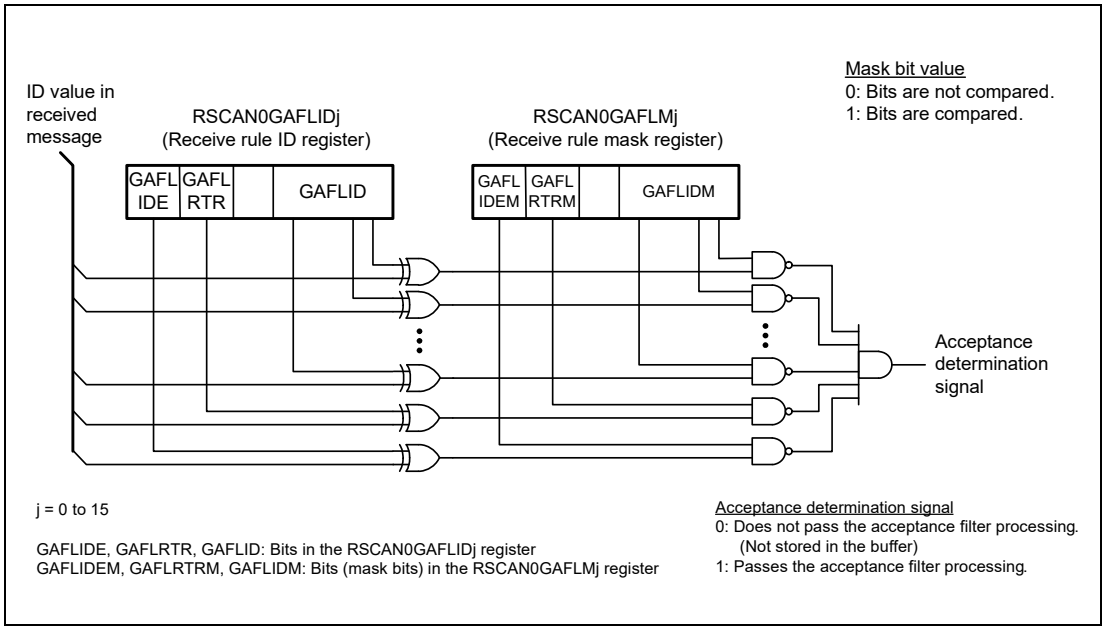

Figure 17.7 Acceptance Filter Function

17.6.1.2 DLC Filter Processing

When the DCE bit in the RSCAN0GCFG register is set to 1 (DLC check is enabled), DLC filter processing is added to messages that passed through the acceptance filter processing. When the DLC value in a message is equal to or larger than the DLC value set in the receive rule, the message passes through the DLC filter processing.

When a message has passed through the DLC filter processing with the DRE bit in the RSCAN0GCFG register set to 0 (DLC replacement is disabled), the DLC value in the received message is stored in the buffer. In this case, all the data bytes in the received message are stored in the buffer.

When a message has passed through the DLC filter processing with the DRE bit in the RSCAN0GCFG register set to 1 (DLC replacement is enabled), the DLC value in the receive rule is stored in the buffer instead of the DLC value in the received message. In this case, a value of 00_H is stored in each data byte beyond the number of bytes which is indicated by the DLC value in the receive rule.

When the DLC value in the received message is smaller than that in the receive rule, the message does not pass through the DLC filter processing. In this case, the message is not stored in the receive buffer or the FIFO buffer and the DEF flag in the RSCAN0GERFL register is set to 1 (a DLC error is present).

17.6.1.3 Routing Processing

Messages that passed through the acceptance filter processing and the DLC filter processing are stored in receive buffers, receive FIFO buffers, or transmit/receive FIFO buffers (set to receive mode or gateway mode). Message storage destination is set by the GAFLRMV and GAFLRMDP[6:0] bits in the RSCAN0GAFLP0j register (j = 0 to 15) and by the RSCAN0GAFLP1j register. Messages that passed through the acceptance filter processing and the DLC filter processing can be stored in up to eight buffers.

17.6.1.4 Label Addition Processing

It is possible to add 12-bit label information to messages that passed through the filter processing and store them in buffers. This label information is set in the GAFLPTR[11:0] bits in the RSCAN0GAFLP0j register.

17.6.1.5 Mirror Function Processing

The mirror function allows the CAN node to receive its own transmitted messages. The mirror function is made available by setting the MME bit in the RSCAN0GCFG register to 1 (mirror function is enabled).

When the mirror function is in use, receive rules for which the GAFLLB bit in the RSCAN0GAFLIDj register is set to 0 are used for data processing when receiving messages transmitted from other CAN nodes. When the CAN node is receiving its own transmitted messages, receive rules for which the GAFLLB bit is set to 1 are used for data processing.

17.6.1.6 Timestamp

The timestamp counter is a 16-bit free-running counter used for recording message receive time. The timestamp counter value is fetched at the start-of-frame (SOF) timing of a message and is then stored in a receive buffer or a FIFO buffer together with the message ID and data. Either pclk/2 or the CANm bit time clock (m = 0 to 2) may be selected as a timestamp counter clock source using the TSBTCS[2:0] and TSSS bits in the RSCAN0GCFG register. The timestamp counter count source is obtained by dividing the selected clock source by the TSP[3:0] value in the RSCAN0GCFG register.

When the CANm bit time clock is used as a clock source, the timestamp counter stops when the corresponding channel transitions to channel reset mode or channel halt mode. When the pclk/2 is used as a clock source, the timestamp function is not affected by channel mode.

The timestamp counter value is reset to 0000_H by setting the TSRST bit in the RSCAN0GCTR register to 1.

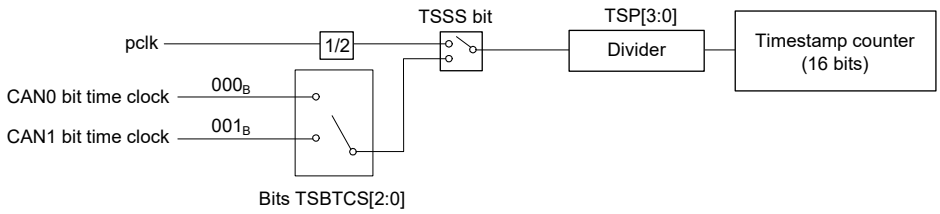

TSBTCS[2:0], TSSS, TSP[3:0]: Bits in the RSCAN0GCFG register

Note: When specifying pclk/2 as the timestamp counter count source, set bits TSBTCS[2:0] to 000_B.

Figure 17.8 Timestamp Function Block Diagram

17.7 Transmission Functions

There are three types of transmission.

- Transmission using transmit buffers:
  Each channel has 16 buffers.
- Transmission using transmit/receive FIFO buffers (transmit mode):
  Each channel has three FIFO buffers. Up to 128 messages can be contained in a single FIFO buffer. Each FIFO buffer is used with a link to a transmit buffer. Only the message to be transmitted next in a FIFO buffer becomes the target of transmit priority determination. Messages are transmitted sequentially on a first-in, first-out basis.
- Transmission using transmit queues:
  Up to 16 transmit buffers per channel can be allocated to the transmit queues. Transmit buffer ((16 × m) + 15) is used as an access window of a corresponding channel. Transmit buffers are allocated to transmit queues in descending order of buffer number. All messages in transmit queues, which are targets of priority determination, are transmitted in the order of ID number.

Figure 17.9 shows the allocation of transmit queues and transmit/receive FIFO buffer link.

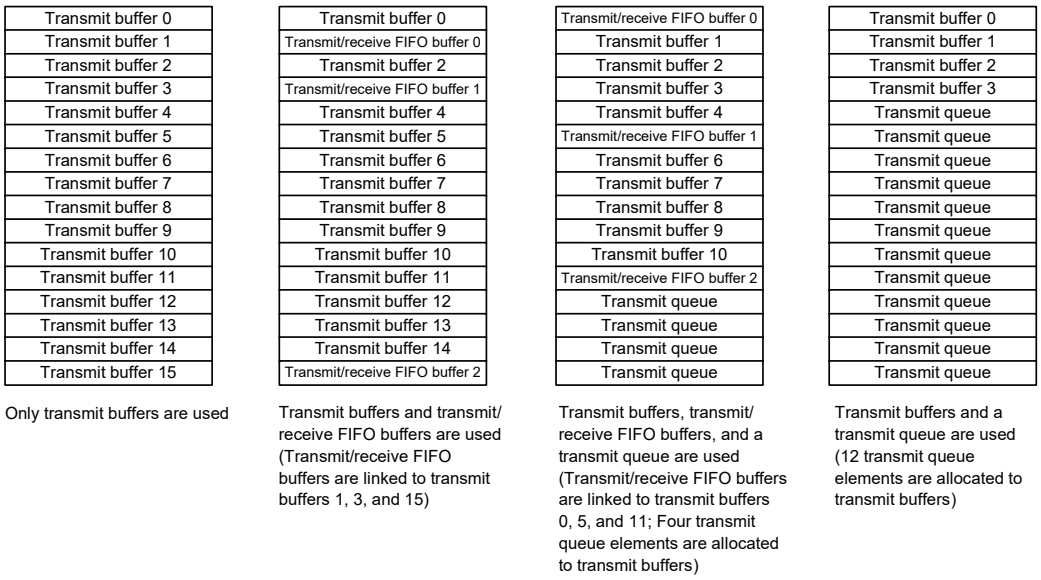

Figure 17.9 Allocation of Transmit Queues and Transmit/Receive FIFO Buffer Links

17.7.1 Transmit Priority Determination

If transmit requests are issued from multiple buffers or from the queue on the same channel, transmit priority is determined using one of the following methods.

The priority is determined by using one of the following methods.

- ID priority (TPRI bit = 0)
- Transmit buffer number priority (TPRI bit = 1)

All CAN channels use the setting of the TPRI bit in the RSCAN0GCFG register.

When the TPRI bit is set to 0, messages are transmitted according to the priority of stored message IDs. ID priority conforms to the CAN bus arbitration specification defined in the CAN specifications. All IDs of pending transmit messages are targets of priority determination, regardless of whether they are stored in transmit buffers, transmit/receive FIFO buffers (set to transmit mode or gateway mode), or the transmit queue. If even a single transmit queue is used, select ID priority. When transmit/receive FIFO buffers are used, the oldest message in a FIFO buffer becomes the target of priority determination. When a message is being transmitted from a transmit/receive FIFO buffer, the next message in the FIFO buffer becomes the target of priority determination. When a transmit queue is used, all messages in the transmit queue are targets of priority determination. If the same ID is set for two or more buffers, the buffer with the smaller buffer number takes precedence.

When the TPRI bit is set to 1, the message in the transmit buffer with the minimum buffer number among all buffers with a transmit request is transmitted first. When transmit/receive FIFO buffers are linked to transmit buffers, transmit priority is determined according to linked transmit buffer numbers.

When messages are retransmitted due to an arbitration-lost or an error, transmit priority determination is made again regardless of the TPRI bit.

17.7.2 Transmission Using Transmit Buffers

Setting the transmit request bit (TMTR bit in the RSCAN0TMCp register) in a transmit buffer to 1 (transmission is requested) allows transmission of data frames or remote frames.

The transmit result is shown by the TMTRF[1:0] flag in the corresponding RSCAN0TMSTSp register (p = 0 to 47). When transmit completes successfully, the TMTRF[1:0] flag is set to 10_B (transmission has been completed (without transmit abort request)) or 11_B (transmission has been completed (with transmit abort request)).

17.7.2.1 Transmit Abort Function

With respect to transmit buffers for which the TMTRM bit in the RSCAN0TMSTSp register is set to 1 (a transmit request is present), when the TMTAR bit in the RSCAN0TMCp register is set to 1 (transmit abort is requested), the transmit request is canceled. When transmit abort is completed, the TMTRF[1:0] flag in the RSCAN0TMSTSp register is set to 01_B (transmit abort has been completed) and the transmit request is canceled (clearing the TMTRM bit to 0).

A message that is being transmitted or a message to be transmitted next according to the transmit priority determination cannot be aborted. However, when an arbitration-lost or an error occurs during transmission of a message for which the TMTAR bit is set to 1, retransmission is not performed.

17.7.2.2 One-Shot Transmission Function (Retransmission Disabling Function)

When the TMOM bit in the RSCAN0TMCp register is set to 1 (one-shot transmission is enabled), transmission is performed only once. Even if an arbitration-lost or an error occurs, retransmission is not performed.

The one-shot transmit result is shown by the TMTRF[1:0] flag in the corresponding RSCAN0TMSTSp register. When one-shot transmission completes successfully, the TMTRF[1:0] flag is set to 10_B or 11_B. When an arbitration-lost or an error occurs, the TMTRF[1:0] flag is set to 01_B (transmit abort has been completed).

17.7.3 Transmission Using FIFO Buffers

Multiple messages can be stored in a single transmit/receive FIFO buffers, up to the number specified by the FIFO buffer depth, which is set by the CFDC[2:0] bits in the RSCAN0CFCCk register (k = 0 to 8). Messages are transmitted sequentially on a first-in, first-out basis.

Each transmit/receive FIFO buffer is linked to a transmit buffer selected by the CFTML[3:0] bits in the RSCAN0CFCCk register. When the CFE bit in the RSCAN0CFCCk register is set to 1 (transmit/receive FIFO buffers are used), transmit/receive FIFO buffers become targets of transmit priority determination. Priority of only the next transmit message is determined in the FIFO buffer.

When the CFE bit is set to 0 (no transmit/receive FIFO buffer is used), the CFEMP flag is set to 1 (the transmit/receive FIFO buffer contains no message (buffer empty)) at the timing below.

- The transmit/receive FIFO buffer becomes empty immediately if the message in it is not being transmitted or is not to be transmitted next.
- The transmit/receive FIFO buffer becomes empty after transmission completion, CAN bus error detection, or arbitration-lost in the case that a message in it is being transmitted or to be transmitted next.

When the CFE bit is cleared to 0, all messages in transmit/receive FIFO buffers are lost and messages cannot be stored in FIFO buffers. Confirm that the CFEMP flag is set to 1 before setting the CFE bit to 1 again.

17.7.3.1 Interval Transmission Function

A message transmission interval time can be set to space the transmission of messages from the same FIFO buffer when using a transmit/receive FIFO buffer set to transmit mode or gateway mode.

Immediately after the first message has been transmitted successfully from the FIFO buffer with the CFE bit in the RSCAN0CFCCk register set to 1, the interval timer starts counting (after EOF7 of the CAN protocol). After that, when the interval time has passed, the next message is transmitted. The interval timer stops in channel reset mode or by clearing the CFE bit to 0.

The interval time is set by the CFITT[7:0] bits in the RSCAN0CFCCk register. When the interval timer is not used, set the CFITT[7:0] bits to 00_H.

Select an interval timer count source using the CFITR and CFITSS bits in the RSCAN0CFCCk register. When the CFITR and CFITSS bits are set to 00_B, the count source is obtained by dividing pclk/2 by the value of the ITRCP[15:0] bits. When the CFITR and CFITSS bits are set to 10_B, the count source is obtained by dividing pclk/2 by (the value of the ITRCP[15:0] bits in the RSCAN0GCFG register × 10). When the CFITR and CFITSS bits are set to $x1_B$, the CANm bit time clock is used as a count source.

The interval time is calculated by the following equations where M is the value of ITRCP[15:0] and N is the value of CFITT[7:0].

- When CFITR and CFITSS = 00_B (fPBA is the frequency of pclk):

$$\frac{1}{f_{PBA}} \times 2 \times M \times N$$

- When CFITR and CFITSS = 10_B:

$$\frac{1}{f_{PBA}} \times 2 \times M \times 10 \times N$$

- When CFITR and CFITSS = $x1_B$ (fCANBIT is the frequency of CANm bit time clock):

$$\frac{1}{f_{CANBIT}} \times N$$

Figure 17.10 shows the interval timer block diagram.

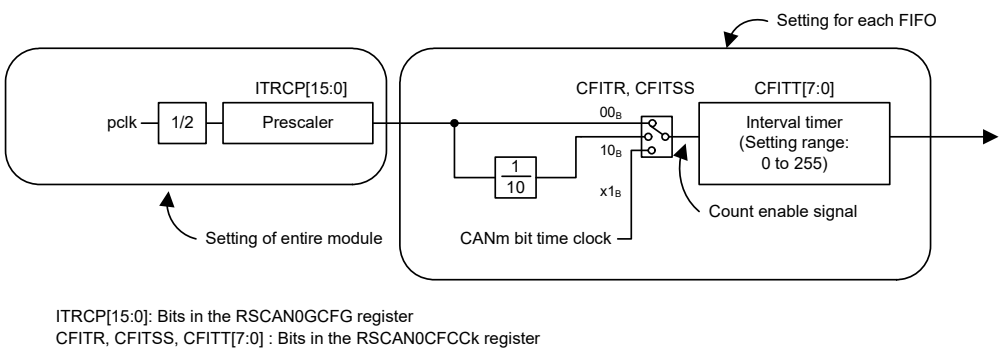

ITRCP[15:0]: Bits in the RSCAN0GCFG register
CFITR, CFITSS, CFITT[7:0] : Bits in the RSCAN0CFCCk register

Note: m = 0 to 2, k = 0 to 8

Figure 17.10 Interval Timer Block Diagram

Figure 17.11 shows the interval timer timing diagram.

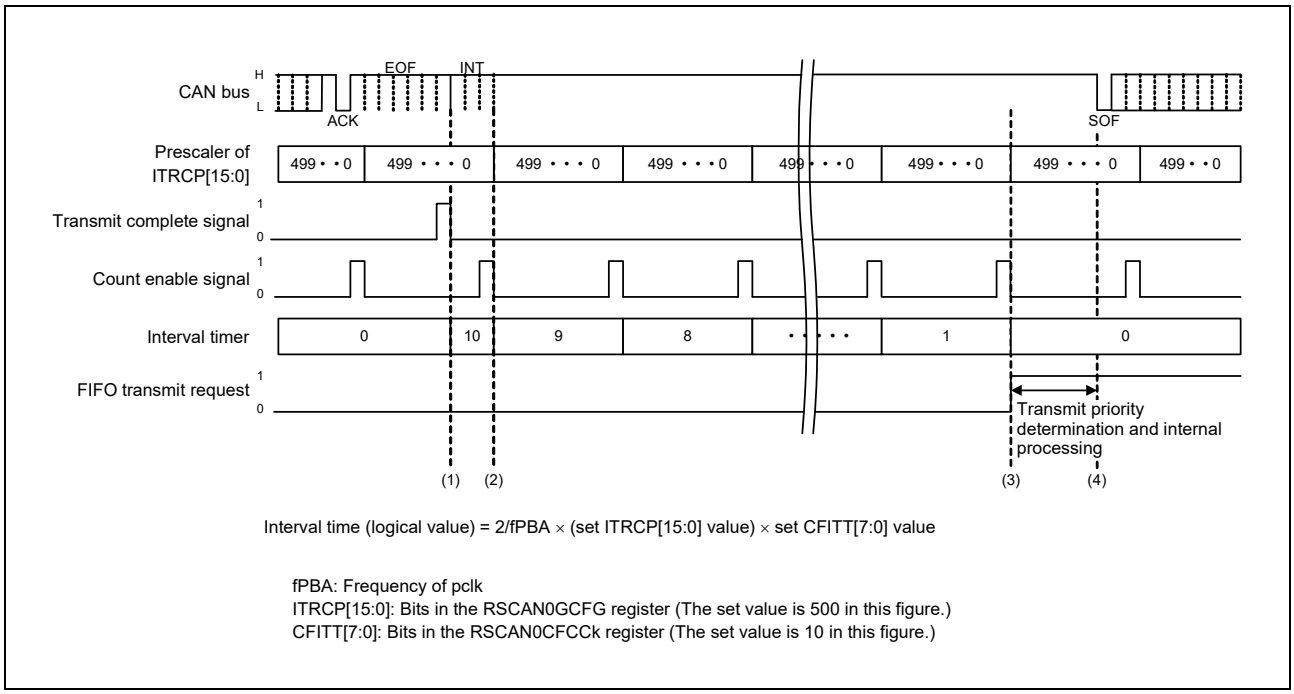

Figure 17.11 Interval Timer Timing Chart

(1) The interval timer starts counting upon completion of transmission. Since the prescaler is not initialized at the time of transmission completion, the first interval time contains an error of up to one count of the interval timer.

(2) The interval timer is decremented by the next count enable signal.

(3) When the interval timer has decreased to 0, the transmit/receive FIFO buffer issues a transmit request.

(4) The transmit/receive FIFO buffer is determined for the next transmission by the priority determination, it starts transmitting data. Transmission starts usually with a delay of three CANm bit time clock cycles or less from the issue of transmit request. If multiple internal processes (such as receive filter processing, message routing, and transmit priority determination) take place in all channels, a delay of up to 348 cycles of the pclk may be generated.

17.7.4 Transmission Using Transmit Queues

Three to sixteen buffers are allocated to a transmit queue for each channel, and transmit buffer ((16 × m) + 15) is used as an access window of a corresponding channel.

All messages in a transmit queue are targets of transmit priority determination and are transmitted in the ID priority order regardless of storage sequence. If two messages having the same ID are stored in a transmit queue, these messages are not always transmitted in the order of their storage in the transmit queue.

Setting the TXQE bit in the RSCAN0TXQCCm register to 0 disables transmit queues. When the TXQE bit is set to 0, the TXQEMP flag in the RSCAN0TXQSTSm register is set to 1 (the transmit queue contains no messages (transmit queue empty)) at the timing below.

- The transmit queue becomes empty immediately when no message in it is being transmitted or will be transmitted next.
- The transmit queue becomes empty after transmission completion, CAN bus error detection, or arbitration-lost when a message in it is being transmitted or will be transmitted next.

When the TXQE bit is cleared to 0, all messages in transmit queues are lost and messages cannot be stored in transmit queues. Confirm that the TXQEMP flag is set to 1 before setting the TXQE bit to 1 again.

17.7.5 Transmit History Function

Information about transmission-completed messages can be stored in the transmit history buffer. Each channel has a single transmit history buffer that can contain 16 sets of transmit history data.

A message transmit source buffer type can be selected by the THLDTE bit in the RSCAN0THLCCm register. The THLEN bit in the RSCAN0CFIDk register (k = 0 to 8) determines whether transmit history data is stored for each message.

The following information on a transmitted message will be stored in the transmission history buffer after the successful completion of transmission.

Storage of the transmission history data after the successful completion of transmission may take up to 132 cycles of pclk.

- Buffer type — 001_B: Transmit buffer
010_B: Transmit/receive FIFO buffer
100_B: Transmit queue
- Buffer number — Number of source transmit buffer, transmit queue, or transmit/receive FIFO buffer. This number depends on buffer types. See **Table 17.93**.
- Label data — Label information of the transmit message

Table 17.93 Transmit History Data Buffer Numbers

Buffer No. / Buffer type	001_B	010_B	100_B
0000_B	Transmit buffer 16 × m + 0	Buffer numbers of the transmit buffer linked to the transmit/receive FIFO buffer by the CFTML[3:0] bits in the RSCAN0CFCCk register (k = 0 to 8)	Buffer numbers of the transmit buffer allocated to the transmit queue that performed transmission
0001_B	Transmit buffer 16 × m + 1		
0010_B	Transmit buffer 16 × m + 2		
0011_B	Transmit buffer 16 × m + 3		
0100_B	Transmit buffer 16 × m + 4		
0101_B	Transmit buffer 16 × m + 5		
0110_B	Transmit buffer 16 × m + 6		
0111_B	Transmit buffer 16 × m + 7		
1000_B	Transmit buffer 16 × m + 8		
1001_B	Transmit buffer 16 × m + 9		
1010_B	Transmit buffer 16 × m + 10		
1011_B	Transmit buffer 16 × m + 11		
1100_B	Transmit buffer 16 × m + 12		
1101_B	Transmit buffer 16 × m + 13		
1110_B	Transmit buffer 16 × m + 14		
1111_B	Transmit buffer 16 × m + 15		

Label data is used to identify each message. Unique label data can be added to each message transmitted from a transmit buffer, transmit queue, or transmit/receive FIFO buffer.

Transmit history data can be read from the RSCAN0THLACCm register. If an attempt is made to store new transmit history data while the buffer is full, the buffer overflows and the new data is discarded.

17.8 Gateway Function

When a transmit/receive FIFO buffer is set to gateway mode, receive messages can be transmitted from an arbitrary channel without CPU intervention.

When a transmit/receive FIFO buffer for which the CFM[1:0] bits in the RSCAN0CFCCk register are set to 10_B (gateway mode) is selected by the RSCAN0GAFLP1j register, messages that passed through the filter processing of the receive rule are stored in the specified transmit/receive FIFO buffer and are automatically transmitted from the buffer.

Messages stored in a transmit/receive FIFO buffer are transmitted sequentially on a first-in, first-out basis. Only the message to be transmitted next becomes the target of transmit priority determination.

Transmit/receive FIFO buffers in the gateway mode are disabled by setting the CFE bit in the RSCAN0CFCCk register to 0 and the CFEMP flag becomes 1 according to the timing below.

- The transmit/receive FIFO buffer becomes empty immediately when the message in it is not being transmitted and will not to be transmitted next.
- The transmit/receive FIFO buffer becomes empty after transmission completion, CAN bus error detection, or arbitration-lost when the message in it is being transmitted or will be transmitted next.

When the CFE bit is cleared to 0, all messages in transmit/receive FIFO buffers are lost and messages can no longer be stored in transmit/receive FIFO buffers. Confirm that the CFEMP flag is set to 1 before setting the CFE bit to 1 again.

17.9 Test Function

The test function is classified into communication tests and global tests.

- Communication tests: Performed for each channel.
  - Standard test mode
  - Listen-only mode
  - Self-test mode 0 (external loopback mode)
  - Self-test mode 1 (internal loopback mode)
- Global tests: Performed for the entire module
  - RAM test (read/write test)
  - Inter-channel communication test

17.9.1 Standard Test Mode

Standard test mode allows CRC test.

17.9.2 Listen-Only Mode

Listen-only mode allows reception of data frames and remote frames. Only recessive bits are transmitted on the CAN bus, and the ACK bit, overload flag, and active error flag are not transmitted.

Listen-only mode is available for detecting the communication speed.

Do not make a transmit request from any buffer or queue in listen-only mode.

Figure 17.12 shows the connection when listen-only mode is selected.

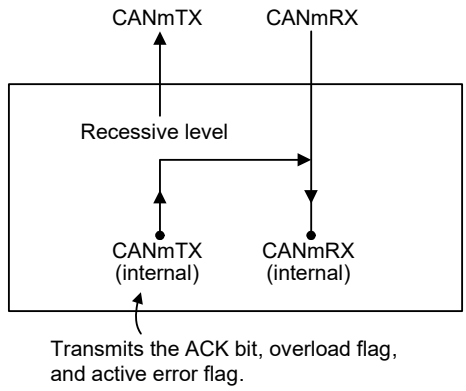

Note: m = 0, 1

Figure 17.12 Connection when Listen-Only Mode is Selected

17.9.3 Self-Test Mode (Loopback Mode)

In self-test mode, transmitted messages are compared with the receive rule of the own channel and the messages are stored in a buffer if they have passed through the filter processing. Messages transmitted from other CAN nodes are compared only with the receive rule for which the GAFLLB bit in the RSCAN0GAFLIDj register (j = 0 to 15) is set to 0 (when a message transmitted from another CAN node is received).

If the mirror function and self-test mode are both enabled, the self-test mode setting takes precedence.

17.9.3.1 Self-Test Mode 0 (External Loopback Mode)

Self-test mode 0 is used to perform a loopback test within a channel including the CAN transceiver.

In self-test mode 0, transmitted messages are handled as messages received through the CAN transceiver and are stored in a buffer. An ACK bit is generated to receive messages transmitted from the own CAN node.

Figure 17.13 shows the connection when self-test mode 0 is selected.

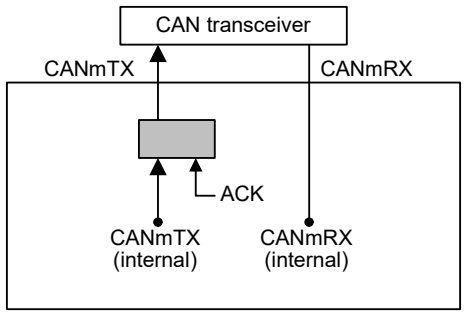

Note: m = 0, 1

Figure 17.13 Connection when Self-Test Mode 0 is Selected

17.9.3.2 Self-Test Mode 1 (Internal Loopback Mode)

In self-test mode 1, transmitted messages are handled as received messages and are stored in a buffer. An ACK bit is generated to receive messages transmitted from the own CAN node.

In self-test mode 1, internal feedback from the internal CANmTX pin (m = 0 to 2) to the internal CANmRX pin is performed. The external CANmRX pin input is isolated. The external CANmTX pin outputs only recessive bits.

Figure 17.14 shows the connection when self-test mode 1 is selected.

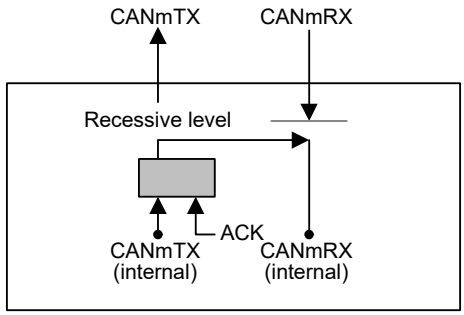

Note: m = 0, 1

Figure 17.14 Connection when Self-Test Mode 1 is Selected

17.9.4 RAM Test

The RAM test function allows accesses to all CAN RAM addresses.

When the RAM test function is used, the RAM is divided into pages of 256 bytes each. RAM test page is set by the RTMPS[6:0] bits in the RSCAN0GTSTCFG register. Data in the set page can be read from and written to the RSCAN0RPGACCr register (r = 0 to 63). The available total RAM size is 7296 bytes ($1C7F_H$).

17.9.5 Inter-Channel Communication Test

The inter-channel communication test function allows communication test by internally connecting CAN channels to each other. During this test, channels are isolated from the external CAN bus.

Before starting data transmission/reception in channel communication mode, make transmission/reception settings for each channel. Set the channel(s) not participating in test to Channel halt mode.

Figure 17.15 shows the connection for inter-channel communication test.

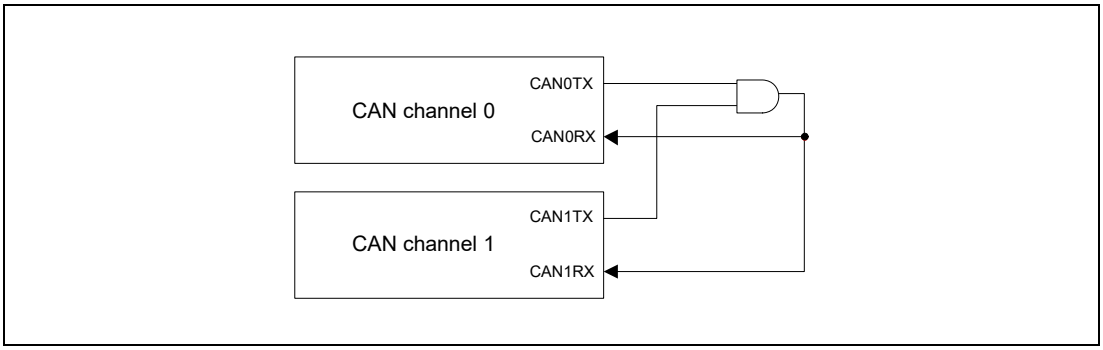

Figure 17.15 Connection for Inter-Channel Communication Test

17.10 RS-CAN Setting Procedure

17.10.1 Initial Settings

The RS-CAN module initializes the CAN RAM after the MCU is reset. The RAM initialization time is 3650 cycles of the pclk. The GRAMINIT flag in the RSCAN0GSTS register is set to 1 (CAN RAM initialization is ongoing) during the RAM initialization and is cleared to 0 (CAN RAM initialization is finished) when the initialization is completed. Make CAN settings after the GRAMINIT flag is cleared to 0. **Figure 17.16** shows the CAN setting procedure after the MCU is reset.

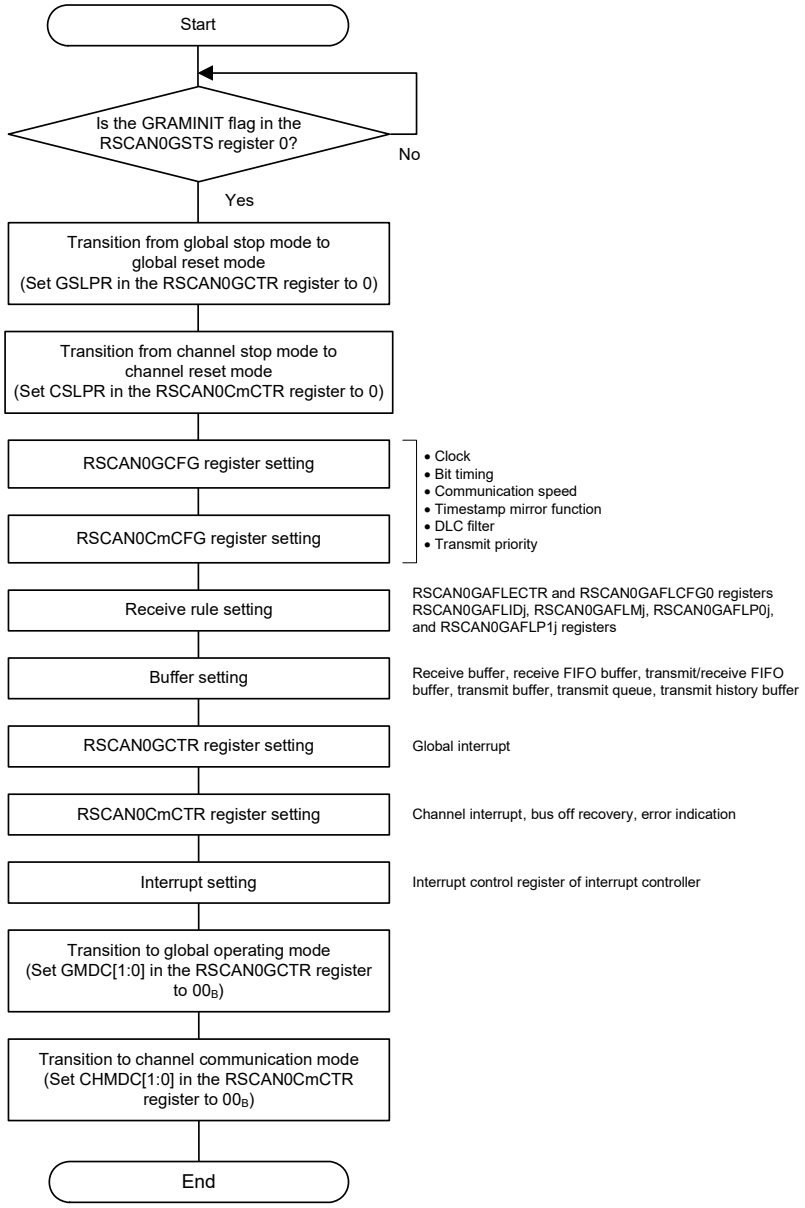

Note: m = 0, 1, j = 0 to 15

Figure 17.16 CAN Setting Procedure after the MCU is Reset

17.10.1.1 Clock Setting

Set the CAN clock (fCAN) as a clock source of the RS-CAN module. Select the clk_xincan or clkc using the DCS bit in the RSCAN0GCFG register.

17.10.1.2 Bit Timing Setting

In the CAN protocol, one bit of a communication frame consists of three segments SS, TSEG1, and TSEG2, of which two segments TSEG1 and TSEG2 can be set by the RSCAN0CmCFG register for each channel. Sample point timing can be determined by setting these two segments. This timing can be adjusted in units of 1 Time Quantum (hereafter referred to as Tq). 1 Tq is equal to one CANmTq clock cycle. The CANmTq clock is obtained by selecting the clock source with the DCS bit in the RSCAN0GCFG register and selecting the clock division ratio with the BRP[9:0] bits in the RSCAN0CmCFG register.

Figure 17.17 shows the bit timing chart. **Table 17.94** shows an example of bit timing setting.

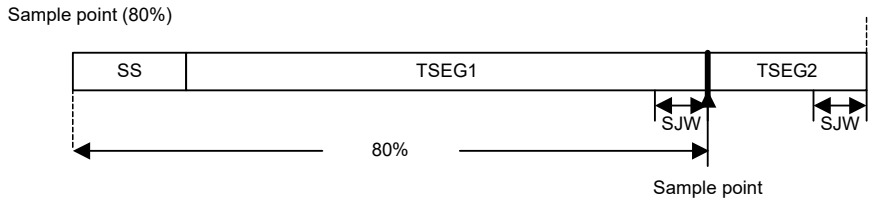

SS = 1 Tq fixed
Set TSEG1 to a range of 4 Tq to 16 Tq
Set TSEG2 to a range of 2 Tq to 8 Tq
Set SJW to a range of 1 Tq to 4 Tq
Set SS + TSEG1 + TSEG2 to a range of 8 Tq to 25 Tq
TSEG1 > TSEG2 ≥ SJW

- SS (synchronization segment):
  The SS is a segment that performs synchronization by monitoring the edge from recessive to dominant bits in the Interframe Space.
  Interframe Space consists of Intermission, Suspend Transmission, and Bus Idle. All nodes can start transmission during Bus Idle.
- TSEG1 (Time segment 1):
  TSEG1 is a segment that absorbs physical delay on the CAN network. The physical delay on the CAN network is twice the total of the delay on the CAN bus, the delay in the input comparator, and the delay in the output driver.
- TSEG2 (Time segment 2):
  TSEG2 is a segment that compensates phase error due to an error in frequency.
- SJW (Resynchronization jump width)
  The SJW is a length to extend or reduce the time segment to compensate for an error in phase due to phase error.

Figure 17.17 Bit Timing Chart

Table 17.94 Example of Bit Timing Setting

1 Bit	Set Value (Tq) SS	TSEG1	TSEG2	SJW	Sample Point (%) Note: See Figure 17.17.
8 Tq	1	4	3	1	62.50
	1	5	2	1	75.00
10 Tq	1	6	3	1	70.00
	1	7	2	1	80.00
16 Tq	1	10	5	1	68.75
	1	11	4	1	75.00
20 Tq	1	12	7	1	65.00
	1	13	6	1	70.00

17.10.1.3 Communication Speed Setting

Set the CAN communication speed for each channel using the fCAN, baud rate prescaler division value (BRP[9:0] bits in the RSCAN0CmCFG register), and Tq count per bit time.

Figure 17.18 shows the CAN clock control block diagram, and **Table 17.95** shows an example of the communication speed setting.

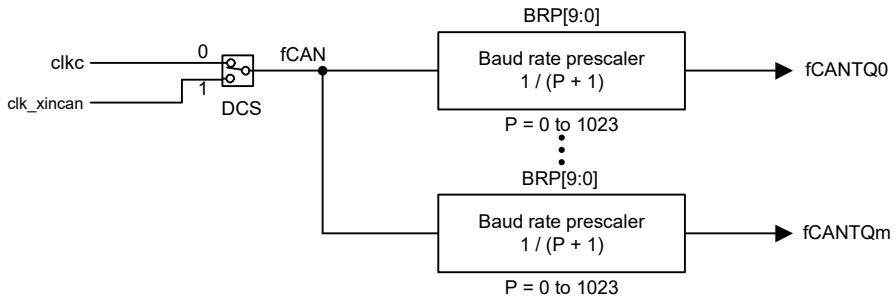

$$\text{Communication speed} = \frac{\text{fCAN}}{\text{Baud rate prescaler division value} \times (\text{Tq count of 1 bit time})}$$

Note: m = 0, 1
DCS: Bit in the RSCAN0GCFG register
BRP[9:0]: Bits in the RSCAN0CmCFG register
fCAN: CAN clock
fCANTQm: CANm Tq clock

Figure 17.18 CAN Clock Control Block Diagram

Table 17.95 Example of Communication Speed Setting

fCAN / Communication speed	40 MHz	16 MHz
1 Mbps	8 Tq (5) 20 Tq (2)	8 Tq (2) 16 Tq (1)
500 Kbps	8 Tq (10) 20 Tq (4)	8 Tq (4) 16 Tq (2)
250 Kbps	8 Tq (20) 20 Tq (8)	8 Tq (8) 16 Tq (4)
125 Kbps	8 Tq (40) 20 Tq (16)	8 Tq (16) 16 Tq (8)

Note: Values in ( ) are baud rate prescaler division values.

17.10.1.4 Receive Rule Setting

Receive rules can be set using receive rule-related registers.

Up to 16 receive rules can be registered per page. Specify pages 0 to 11 by the AFLPN[4:0] bits in the RSCAN0GAFLECTR register. Set receive rule table write enable/disable using the AFLDAE bit.

Figure 17.19 shows the receive rule setting procedure.

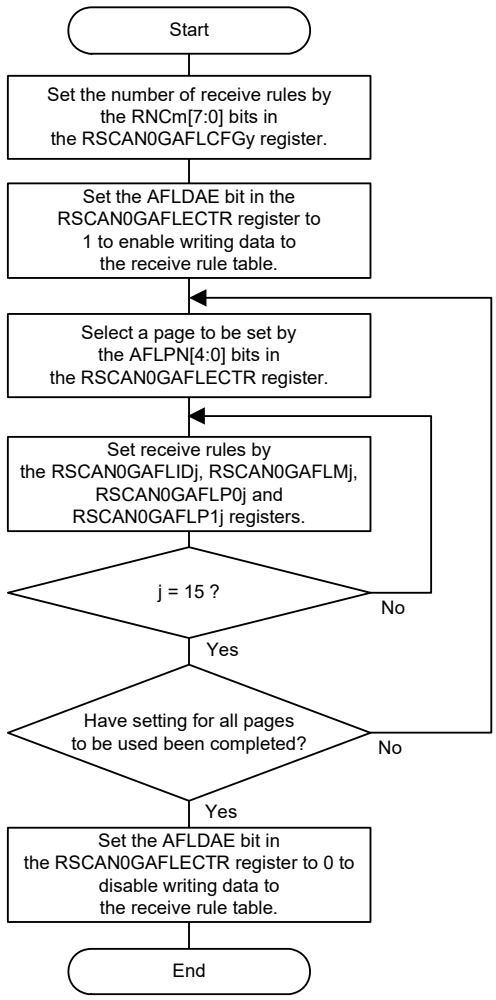

Note: y = 0, m = 0 to 2, j = 0 to 15

Figure 17.19 Receive Rule Setting Procedure

17.10.1.5 Buffer Setting

Set sizes and interrupt sources of buffers. For transmit/receive FIFO buffers that are set to transmit mode, set transmit buffers to be linked.

Figure 17.20 shows the buffer configuration. **Figure 17.21** shows the buffer setting procedure.

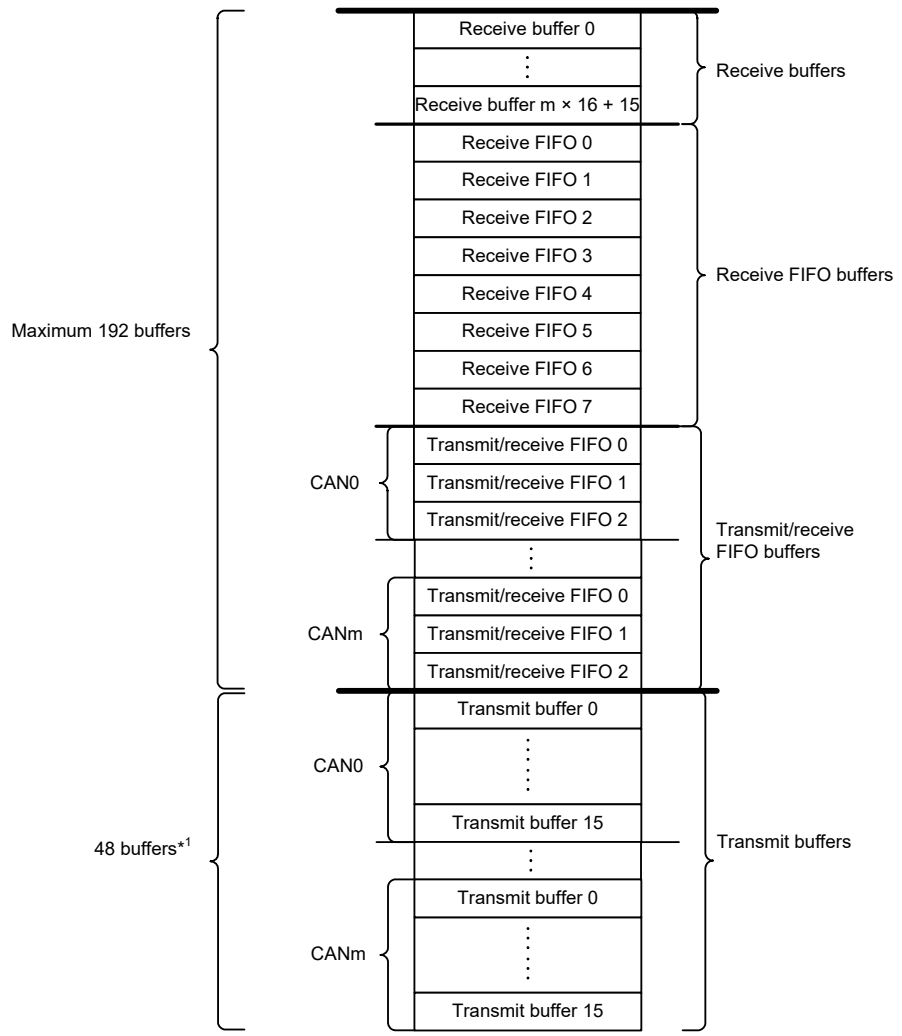

Note: m = 0 to 2

Note 1. 32 buffers for devices that have 2 channels

Figure 17.20 Buffer Configuration

CAUTION

Receive buffers, receive FIFO buffers, transmit/receive FIFO buffers, and transmit buffers are located in succession.

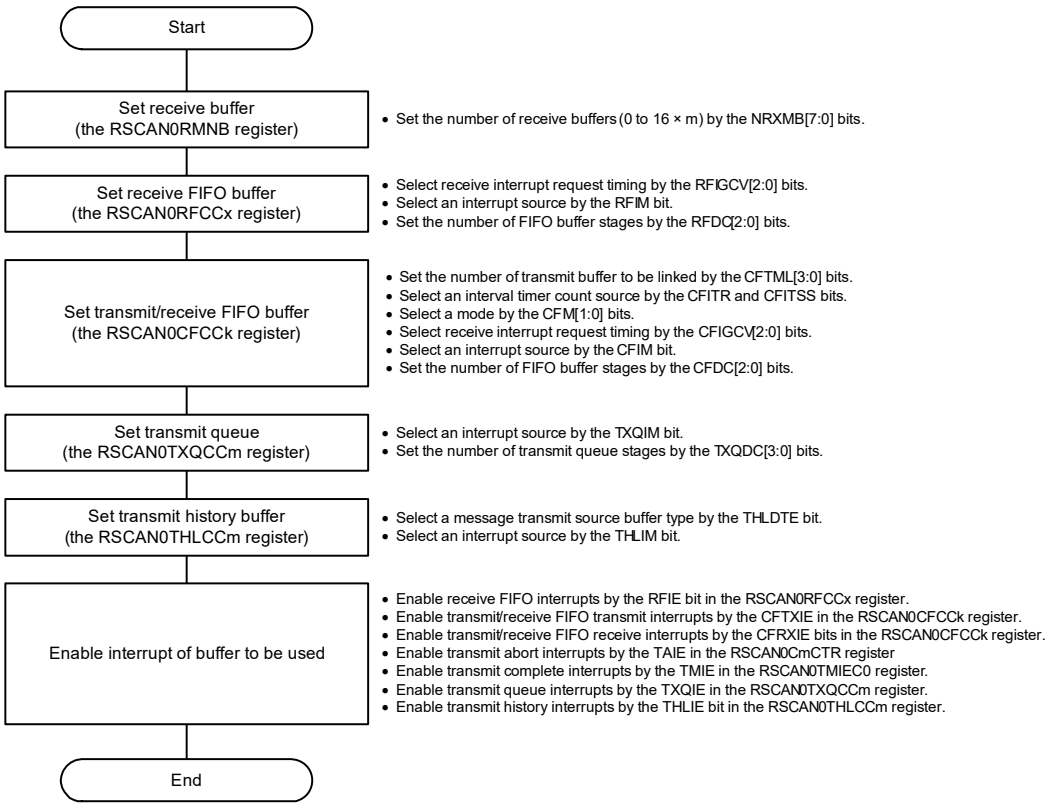

Note: m = 0 to 2, k = 0 to 8, x = 0 to 7

Figure 17.21 Buffer Setting Procedure

17.10.2 Reception Procedure

17.10.2.1 Receive Buffer Reading Procedure

When the processing to store received messages in a receive buffer starts, the RMNSq flag in the RSCAN0RMNDy register (y = 0, 1; q = 0 to 47) is set to 1 (receive buffer q contains a new message). Messages can be read from the RSCAN0RMIDq, RSCAN0RMPTRq, RSCAN0RMDF0q, and RSCAN0RMDF1q registers. If the next message has been received before the current message is read from the receive buffer, the message is overwritten. **Figure 17.22** shows the receive buffer reading procedure.

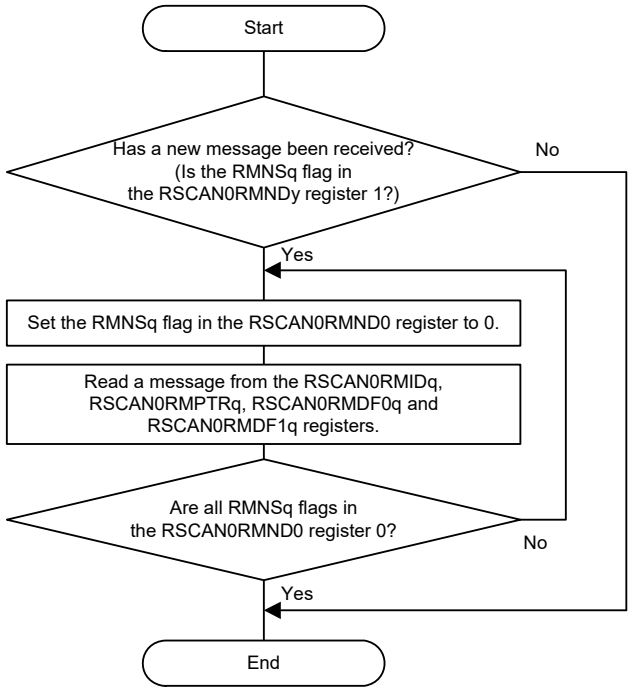

Note: y = 0, 1; q = 0 to 47

Figure 17.22 Receive Buffer Reading Procedure

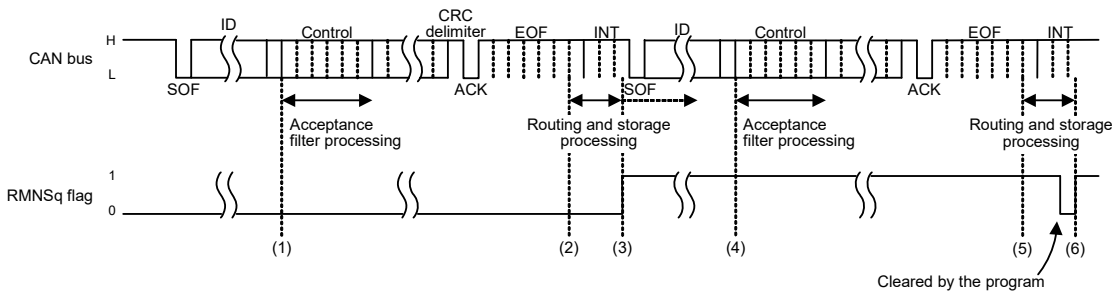

Note: q = 0 to 31
RMNSq: Flag in the RSCAN0RMND0 register

Figure 17.23 Receive Buffer Reception Timing Chart

(1) When the ID field in a message has been received, the acceptance filter processing starts.

(2) When the message matches the receive rule of the corresponding channel and the message has been successfully received, the routing processing to transfer the message to the specified buffer starts. When the DCE bit in the RSCAN0GCFG register is set to 1 (DLC check is enabled), the DLC filter processing starts at this time.

(3) When the message has passed through the DLC filter processing, the processing to store the message in the specified receive buffer starts.
When the message storage processing starts, the RMNSq flag in the corresponding RSCAN0RMNDy register is set to 1 (the receive buffer contains a new message). If other channels are performing filter processing or transmit priority determination processing, the routing processing and the storage processing may be delayed.

(4) When the ID field of the next message has been received, the acceptance filter processing starts.

(5) When the message matches the receive rule of the corresponding channel and the message has been successfully received, the routing processing to transfer the message to the specified buffer starts. When the DCE bit in the RSCAN0GCFG register is set to 1 (DLC check is enabled), the DLC filter processing starts at this time.

(6) When the corresponding RMNSq flag is cleared to 0 (the receive buffer contains no new message), this flag is set to 1 again when the message storage processing starts. Even if the RMNSq flag remains 1, a new message is overwritten to the receive buffer. The RMNSq flag should not be cleared to 0 during storage of messages.

17.10.2.2 FIFO Buffer Reading Procedure

When received messages have been stored in one or more receive FIFO buffers or a transmit/receive FIFO buffer that is set to receive mode or gateway mode, the corresponding message count display counter (RFMC[7:0] bits in the RSCAN0RFSTSx register (x = 0 to 7) or CFMC[7:0] bits in the RSCAN0CFSTSk register (k = 0 to 8)) is incremented. At this time, when the RFIE bit (receive FIFO interrupt is enabled) in the RSCAN0RFCCx register or the CFRXIE bit (transmit/receive FIFO receive interrupt is enabled) in the RSCAN0CFCCk register is set to 1, an interrupt request is generated. Received messages can be read from the RSCAN0RFIDx, RSCAN0RFPTRx, RSCAN0RFDF0x, and RSCAN0RFDF1x registers for receive FIFO buffers, or from the RSCAN0CFIDk, RSCAN0CFPTRk, RSCAN0CFDF0k, and RSCAN0CFDF1k registers for transmit/receive FIFO buffers. Messages in FIFO buffers can be read sequentially on a first-in, first-out basis.

When the message count display counter value matches the FIFO buffer depth (a value set by the RFDC[2:0] bits in the RSCAN0RFCCx register or the CFDC[2:0] bits in the RSCAN0CFCCk register), the RFFLL or CFFLL flag is set to 1 (the receive FIFO buffer is full).

When all messages have been read out of the FIFO buffer, the RFEMP flag in the RSCAN0RFSTSx register or the CFEMP flag in the RSCAN0CFSTSk register is set to 1 (the receive FIFO buffer contains no unread message (buffer empty)).

If the RFE bit or the CFE bit is cleared to 0 (no receive FIFO buffer is used) with the interrupt request flag (RFIF flag in the RSCAN0RFSTSx register or CFRXIF flag in the RSCAN0CFSTSk register) set to 1 (a receive FIFO interrupt request is present), the interrupt request flag is not automatically cleared to 0. The program must clear the interrupt request flag to 0.

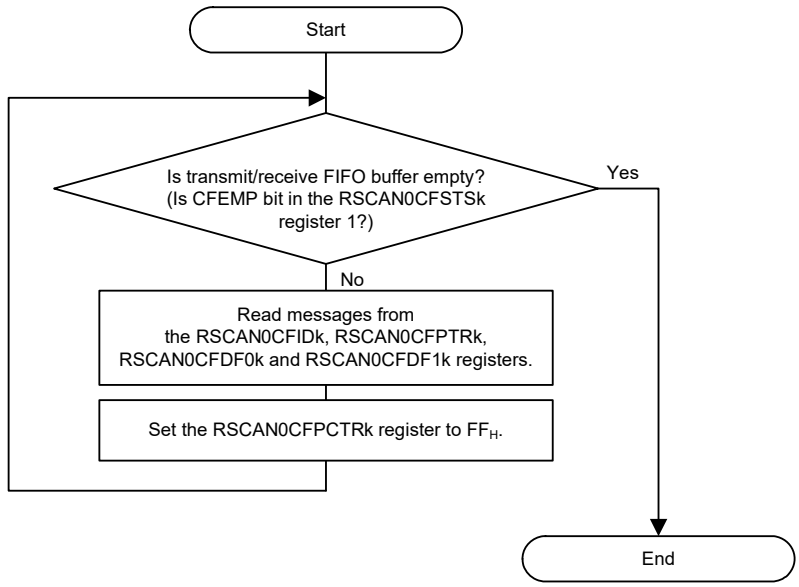

Note: k = 0 to 8

Figure 17.24 Transmit/Receive FIFO Buffer Reading Procedure

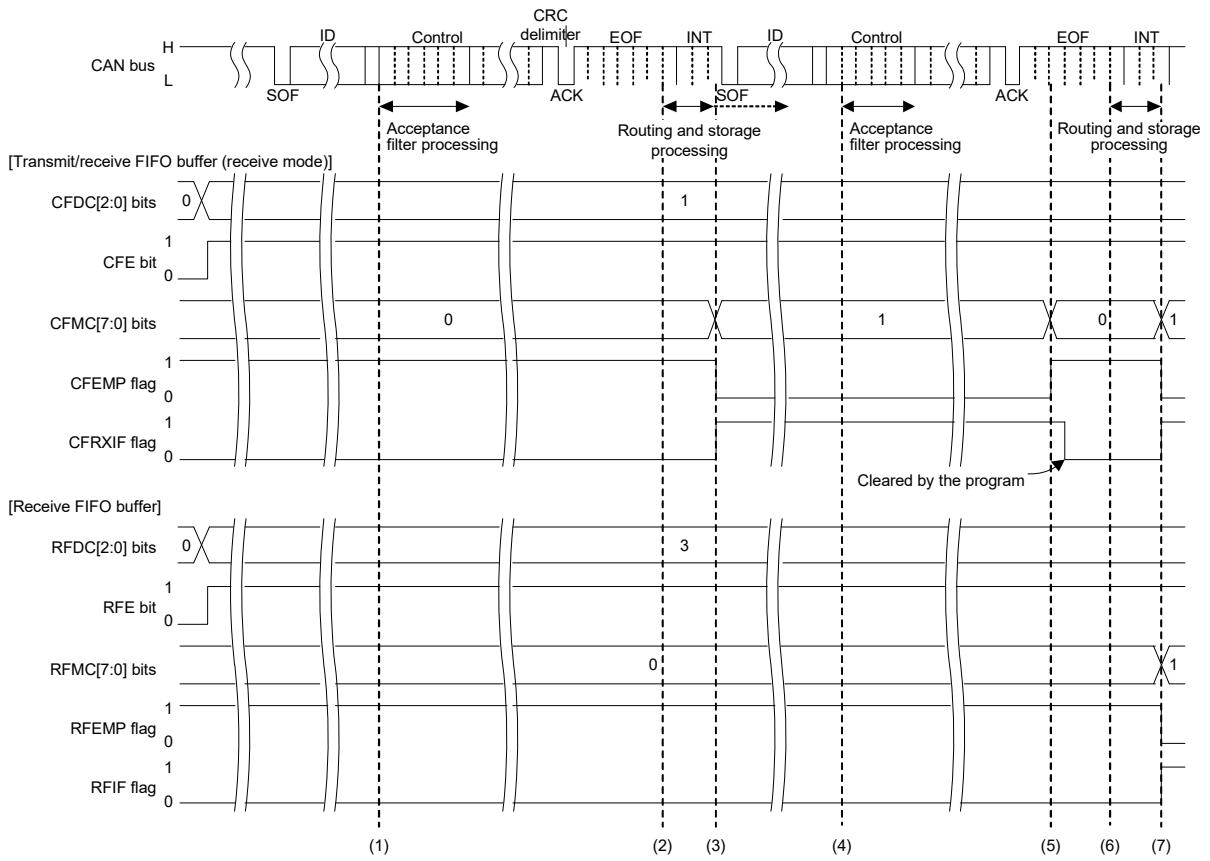

Note: k = 0 to 8, x = 0 to 7
CFDC[2:0], CFE: Bits in the RSCAN0CFCCk register
CFMC[7:0], CFEMP, CFRXIF: Flags in the RSCAN0CFSTSk register
RFDC[2:0], RFE: Bits in the RSCAN0RFCCx register
RFMC[7:0], CFEMP, RFIF: Flags in the RSCAN0RFSTSx register

Figure 17.25 FIFO Buffer Reception Timing Chart

(1) When the ID field in a message has been received, the acceptance filter processing starts.

(2) When the message matches the receive rule of the corresponding channel and the message has been successfully received, the routing processing to transfer the message to the specified buffer starts. When the DCE bit in the RSCAN0GCFG register is set to 1 (DLC check is enabled), the DLC filter processing starts at this time.

(3) When the message has passed through the DLC filter processing and the CFE bit in the RSCAN0CFCCk register is 1 (transmit/receive FIFO buffers are used) and the CFDC[2:0] value in the RSCAN0CFCCk register is 001_B or more, the message is stored in the transmit/receive FIFO buffer that is set to receive mode. The CFMC[7:0] value in the RSCAN0CFSTSk register is incremented and becomes 01_H. When the CFIM bit in the RSCAN0CFCCk register is set to 1 (a FIFO receive interrupt request is generated each time a message has been received), the CFRXIF flag in the RSCAN0CFSTSk register is set to 1 (a transmit/receive FIFO receive interrupt request is present). The CFRXIF flag can be reset to 0 by the program.

(4) When the ID field of the next message has been received, the acceptance filter processing starts.

(5) Read received messages from the RSCAN0CFIDk, RSCAN0CFPTRk, RSCAN0CFDF0k, and RSCAN0CFDF1k registers and write FF_H to the RSCAN0CFPCTRk register. This causes the CFMC[7:0] bits in the RSCAN0CFSTSk register to be decremented. When CFMC[7:0] becomes 00_H, the CFEMP flag in the RSCAN0CFSTSk register becomes 1 (the transmit/receive FIFO buffer contains no message (buffer empty)).

(6) When the message matches the receive rule of the corresponding channel and the message has been successfully received, the routing processing to transfer the message to the specified buffer starts. When the DCE bit in the RSCAN0GCFG register is set to 1 (DLC check is enabled), the DLC filter processing starts at this time.

(7) The message is stored in the transmit/receive FIFO buffer set in receive mode when the message has passed through the DLC filter process if the CFE bit is set to 1 (transmit/receive FIFO buffers are used), and the CFDC[2:0] bits are set to 001_B or more. The CFMC[7:0] bit value is incremented by 1 to be 01_H. When the CFIM bit is set to 1 (an interrupt occurs each time a message has been received), the CFRXIF flag is set to 1 (a transmit/receive FIFO receive interrupt request is present).
The message is stored in the receive FIFO buffer if the RFE bit in the RSCAN0RFCCx register is set to 1 (receive FIFO buffers are used), and the RFDC[2:0] bits in the RSCAN0RFCCx register are set to 001_B or more. The RFMC[7:0] bits in the RSCAN0RFSTSx register are set to 01_H by being incremented by 1. When the RFIM bit in the RSCAN0RFCCx register is set to 1 (an interrupt occurs each time a message has been received), the RFIF flag in the RSCAN0RFSTSx register is set to 1 (a receive FIFO interrupt request is present).

17.10.3 Transmission Procedure

17.10.3.1 Procedure for Transmission from Transmit Buffers

Figure 17.26 shows the procedure for transmission from transmit buffers.

Figure 17.27 shows a timing chart where messages are transmitted from two transmit buffers in the same channel and transmission has been successfully completed. **Figure 17.28** shows a timing chart where messages are transmitted from two transmit buffers in the same channel and transmit abort has been completed.

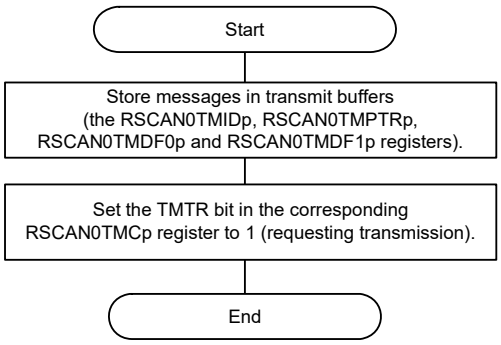

Note: p = 0 to 47

Figure 17.26 Procedure for Transmission from Transmit Buffers

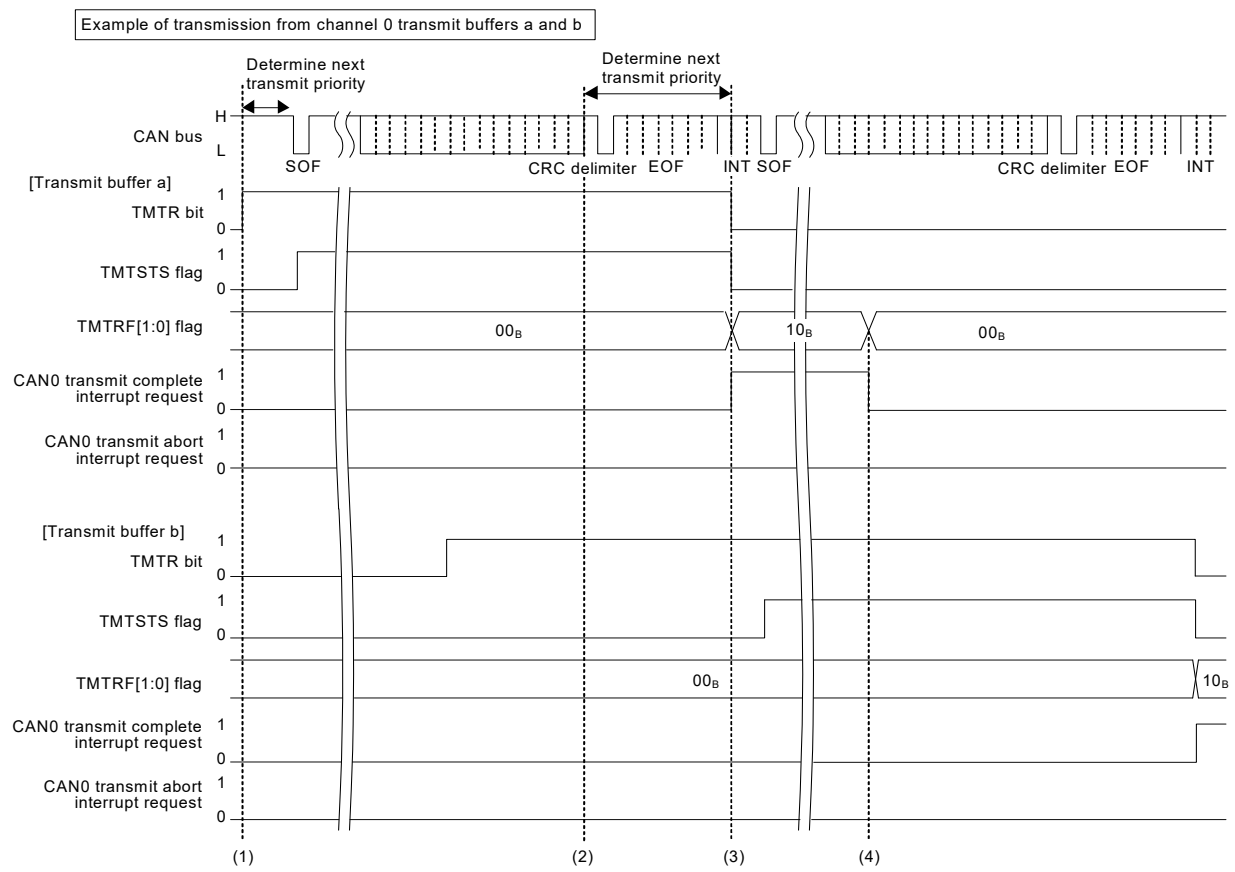

Note: a = 0 to 47, b = 0 to 47
TMTR: Bit in the RSCAN0TMCp register
TMTSTS, TMTRF[1:0]: Flags in the RSCAN0TMSTSp registers

Figure 17.27 Transmit Buffer Transmission Timing Chart (Transmission Completed Successfully)

(1) When the TMTR bit in the RSCAN0TMCa register is set to 1 while the CAN bus is idle, the transmit priority determination processing starts to determine the highest-priority transmit buffer. If transmit buffer a is determined to be the highest-priority transmit buffer, the TMTSTS flag in the corresponding RSCAN0TMSTSa register is set to 1 (transmission is in progress) and the CAN channel starts transmitting data.

(2) When a transmit request from a buffer is present, the priority determination starts with the CRC delimiter for the next transmission. The determination time may delay if the transmit priority determination processing is performed on another channel. However, the delay does not occur during transmission because the determination processing is completed by the third bit of the intermission.

(3) When transmission completes successfully, the TMTRF[1:0] flag in the RSCAN0TMSTSa register is set to 10_B (transmission has been completed (without transmit abort request)) and the TMTSTS flag and the TMTR bit in the RSCAN0TMCa register are cleared to 0. When the TMIEa bit in the RSCAN0TMIEC0 register is 1 (transmit buffer interrupt is enabled), a CAN0 transmit complete interrupt request is generated. To clear the interrupt request, set the TMTRF[1:0] flag to 00_B (transmission is in progress or no transmit request is present).

(4) Before starting the next transmission, set the TMTRF[1:0] flag to 00_B. Write the next message to the transmit buffer, and then set the TMTR bit to 1 (transmission is requested). The TMTR bit can be set to 1 only when the TMTRF[1:0] flag value is 00_B.
If an arbitration-lost has occurred after transmission is started, the TMTSTS flag is cleared to 0. The transmit priority determination is reexecuted at the beginning of the CRC delimiter to search the highest-priority transmit buffer. If an error has occurred during transmission or after arbitration loss, the priority determination processing is reexecuted during transmission of an error frame.

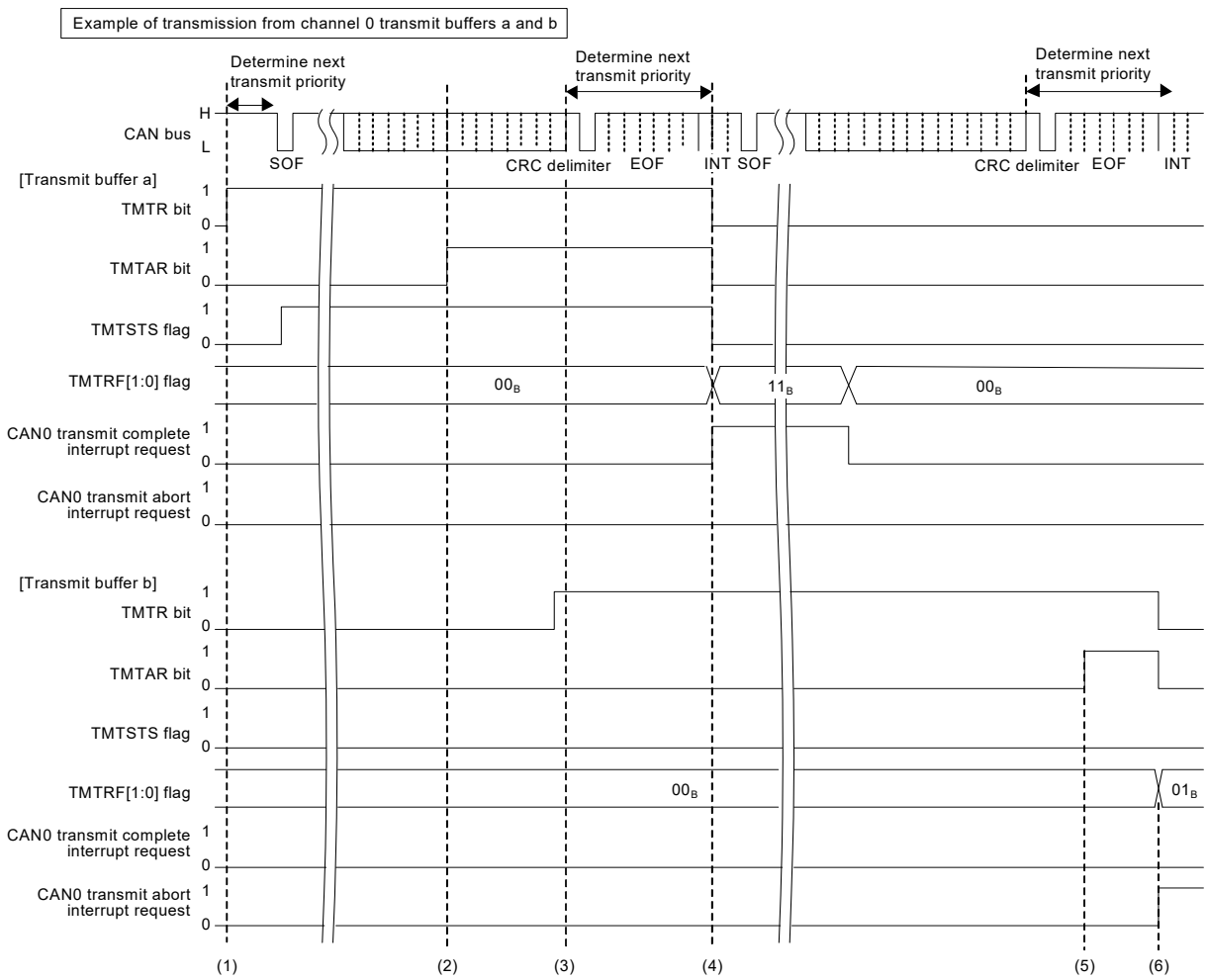

Note: a = 0 to 47, b = 0 to 47
TMTR, TMTAR: Bits in the RSCAN0TMCp register
TMTSTS, TMTRF[1:0]: Flags in the RSCAN0TMSTSp register

Figure 17.28 Transmit Buffer Transmission Timing Chart (Transmit Abort Completed)

(1) When the TMTR bit in the RSCAN0TMCa register is set to 1 while the CAN bus is idle, the transmit priority determination processing starts to determine the highest-priority transmit buffer. If transmit buffer a is determined to be the highest-priority transmit buffer, the TMTSTS flag in the corresponding RSCAN0TMSTSa register is set to 1 (transmission is in progress) and the CAN channel starts transmitting data.

(2) When it is determined that the transmit buffer is used for the next transmission or transmission is in progress, message transmission is not aborted unless an error or arbitration loss occurs even if the TMTAR bit is set to 1 (transmit abort is requested).

(3) The priority determination starts with the CRC delimiter for the next transmission. In this timing chart, buffer b is not selected as the next transmit buffer. The determination time may delay if the transmit priority determination processing is performed on another channel. However, the delay does not occur during transmission because the determination processing is completed by the third bit of the intermission.

(4) When transmission completes successfully, the TMTRF[1:0] flag in the RSCAN0TMSTSa register is set to 11_B (transmission has been completed (with transmit abort request)) and the TMTSTS flag and the TMTR bit in the RSCAN0TMCa register are cleared to 0. When the TMIEa value in the RSCAN0TMIEC0 register is 1 (transmit buffer interrupt is enabled), a CAN0 transmit complete interrupt request is generated. To clear the interrupt request, set the TMTRF[1:0] flag to 00_B (transmission is in progress or no transmit request is present).

(5) While another CAN node is transmitting data on the CAN bus (TMTSTS flag = 0), if the TMTAR bit is set to 1 while the corresponding channel is determining transmit priority, the TMTR bit cannot be cleared to 0.

(6) After the internal processing time has passed, the transmission is terminated and the TMTRF[1:0] flag is set to 01_B. When the transmit buffer is not transmitting data and is not selected as the next transmit buffer and priority determination is not being made, an abort request is immediately accepted and the TMTRF[1:0] flag is set to 01_B. At this time, the TMTR and TMTAR bits are cleared to 0. When transmit abort is completed with the TAIE bit in the RSCAN0CmCTR register set to 1 (transmit abort interrupt is enabled), an interrupt request is generated. To clear the interrupt request, set the TMTRF[1:0] flag to 00_B.

If an arbitration loss has occurred after the CAN channel started transmission, the TMTSTS bit is cleared to 0. The transmit priority determination is reexecuted at the beginning of the CRC delimiter to find the highest-priority transmit buffer. If an error has occurred during transmission or after arbitration loss, the priority determination processing is reexecuted during transmission of an error frame.

17.10.3.2 Procedure for Transmission from Transmit/Receive FIFO Buffers

Figure 17.29 shows the procedure for transmission from transmit/receive FIFO buffers.

Figure 17.30 shows a timing chart where messages are transmitted from two transmit/receive FIFO buffers in the same channel and transmission has been successfully completed. **Figure 17.31** shows a timing chart where messages are transmitted from two transmit/receive FIFO buffers in the same channel and transmit abort has been completed.

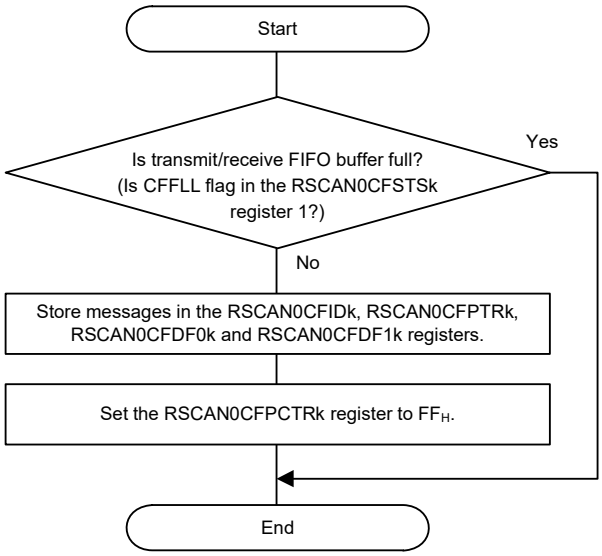

Note: k = 0 to 8

Figure 17.29 Procedure for Transmission from Transmit/Receive FIFO Buffers

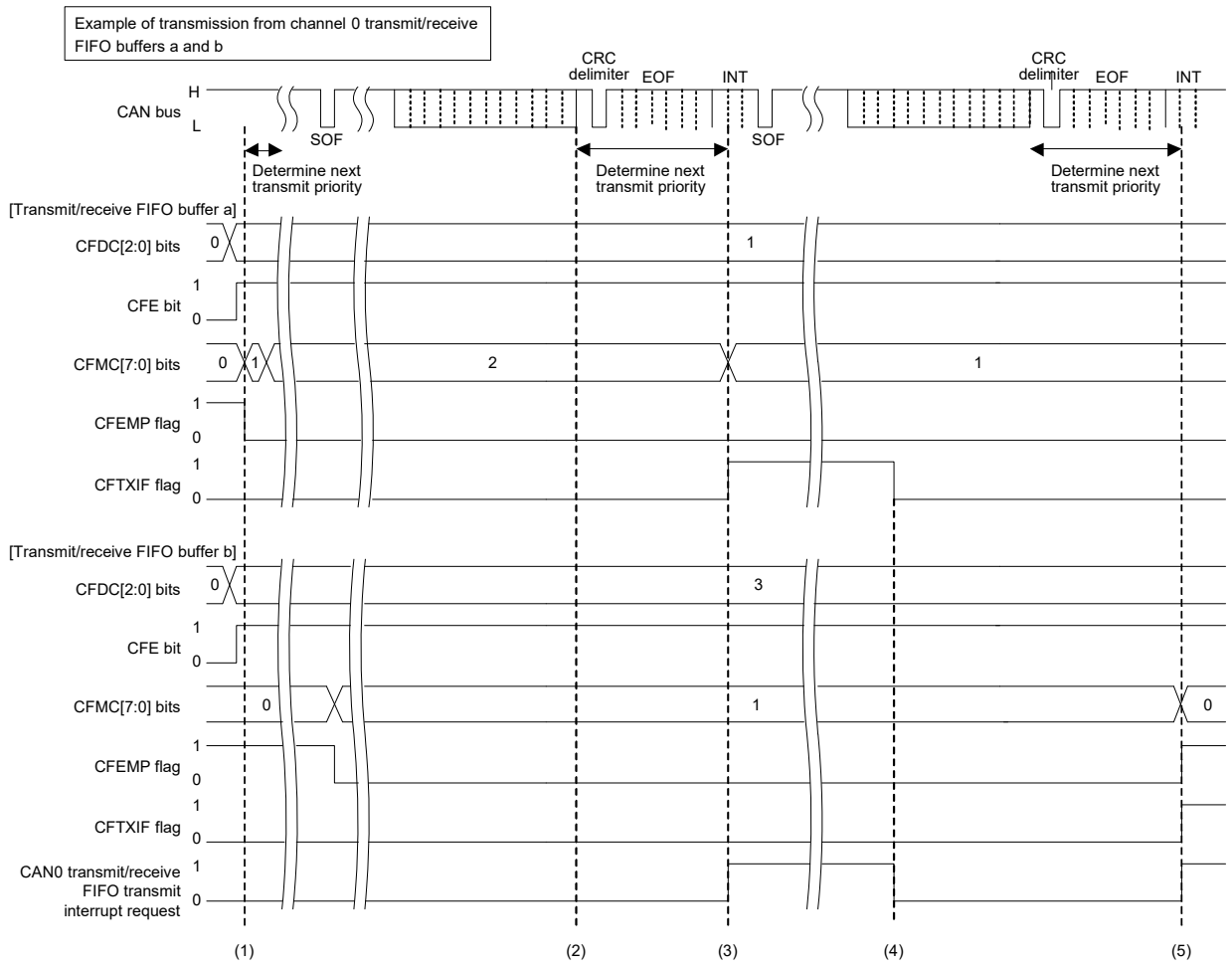

Note: a = 0 to 8, b = 0 to 8
CFDC[2:0],CFE: Bits in the RSCAN0CFCCk register
CFMC[7:0], CFEMP, CFTXIF: Flags in the RSCAN0CFSTSk register

Figure 17.30 Transmit/Receive FIFO Buffer Transmission Timing Chart (Transmission Completed Successfully)

(1) While the CAN bus is idle, when the CFE bit in the RSCA0CFCCa register is 1 (transmit/receive FIFO buffers are used) and the CFDC[2:0] value in the RSCAN0CFCCa register is 001_B (4 messages) or more and the CFMC[7:0] value in the RSCAN0CFSTSa register is 01_H or more, the priority determination processing starts to determine the highest-priority transmit message. When the highest-priority transmit message has been determined, transmission of the message starts. In this figure, the message is transmitted from transmit/receive FIFO buffer a of channel 0.

(2) When a transmit request from a buffer is present, the priority determination starts with the CRC delimiter for the next transmission. The determination time may delay if the transmit priority determination processing is performed on another channel. However, the delay does not occur during transmission because the determination processing is completed by the third bit of the intermission.

(3) When transmission completes successfully, the CFMC[7:0] value in the RSCAN0CFSTSa register is decremented. Setting the CFIM bit in the RSCAN0CFCCa register to 1 (a FIFO

transmit interrupt request is generated each time a message has been transmitted) sets the CFTXIF flag in the RSCAN0CFSTSk register to 1 (a transmit/receive FIFO transmit interrupt request is present).

(4) The program can clear the CFTXIF flag.

(5) Message transmission from transmit/receive FIFO buffer b of channel 0 has been completed and the CFMC[7:0] value in the RSCAN0CFSTSb register is decremented. The CFMC[7:0] bits are cleared to 00_H and therefore the CFEMP flag in the RSCAN0CFSTSk register is set to 1 (the transmit/receive FIFO buffer contains no message (buffer empty)).

Transmission is continued until the CFEMP flag is set to 1. It is possible to continuously store transmit messages in FIFO buffers until the CFFLL flag in the RSCAN0CFSTSa and RSCAN0CFSTSb register is set to 1 (the transmit/receive FIFO buffer is full).

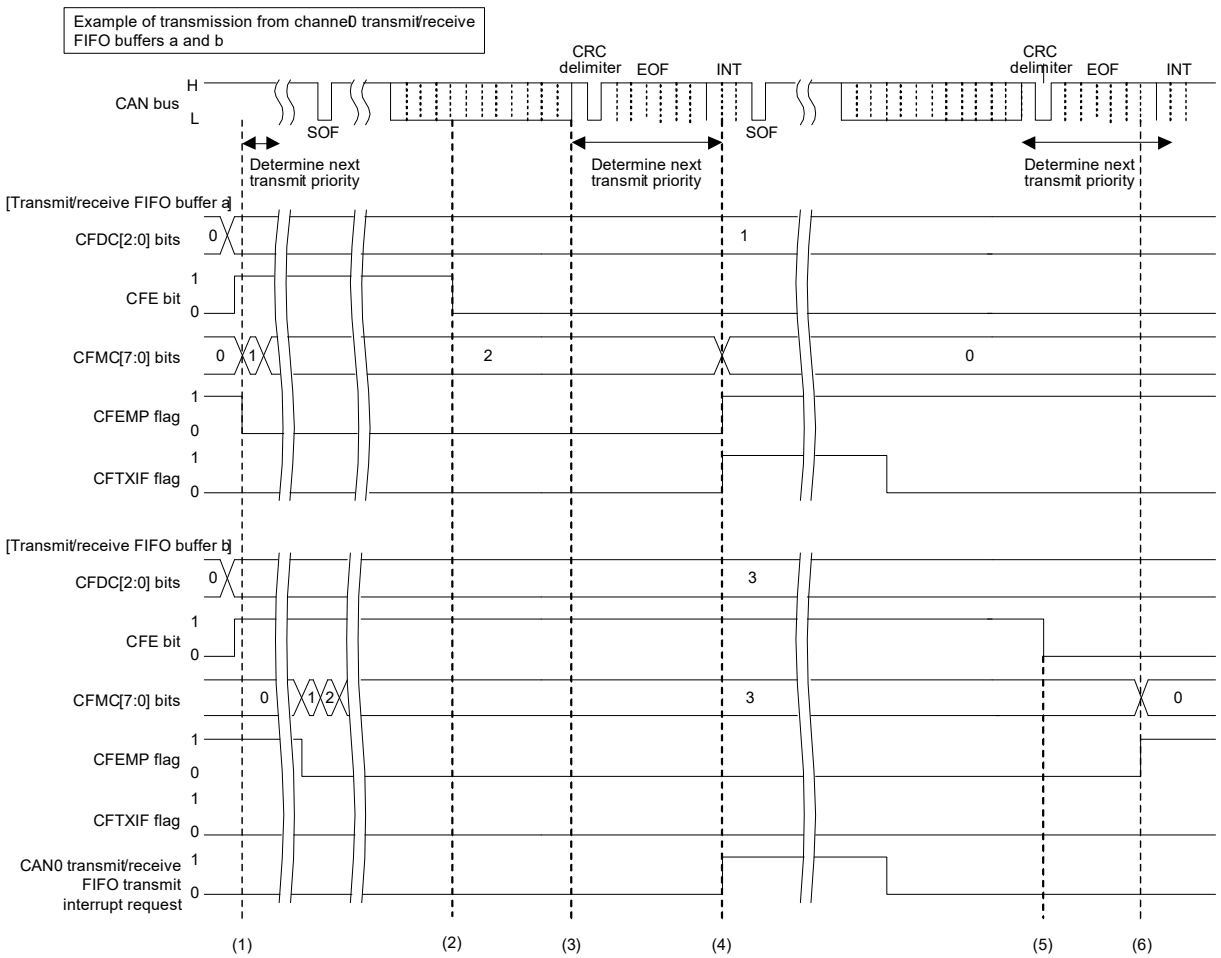

Note: a = 0 to 8, b = 0 to 8
CFDC[2:0], CFE: Bits in the RSCAN0CFCCk register
CFMC[7:0], CFEMP, CFTXIF: Flags in the RSCAN0CFSTSk register

Figure 17.31 Transmit/Receive FIFO Buffer Transmission Timing Chart (Transmit Abort Completed)

(1) While the CAN bus is idle, when the CFE bit in the RSCAN0CFCCa register (a = 0 to 8) is 1 (transmit/receive FIFO buffers are used) and the CFDC[2:0] value in the RSCAN0CFCCa

register is 001_B (4 messages) or more and the CFMC[7:0] value in the RSCAN0CFSTSa register is 01_H or more, the priority determination processing starts to determine the highest-priority transmit message. When the highest-priority transmit message has been determined, transmission of the message starts. In this figure, the message is transmitted from transmit/receive FIFO buffer a of channel 0.

(2) When transmission is in progress or it is determined that the transmit/receive FIFO buffer is used for the next transmission, message transmission is not aborted unless an error or arbitration loss occurs even if the CFE bit is set to 0 (no transmit/receive FIFO buffer is used).

(3) When a transmit request from a buffer is present, the priority determination starts with the CRC delimiter for the next transmission. In this figure, transmit/receive FIFO buffer b is not selected as a buffer for the next transmission. The determination time may delay if the transmit priority determination processing is performed on another channel. However, the delay does not occur during transmission because the determination processing is completed by the third bit of the intermission.

(4) When transmit completes successfully, the CFMC[7:0] value is cleared to 00_H. Setting the CFIM bit to 1 (a FIFO transmit interrupt request is generated each time a message has been transmitted) sets the CFTXIF flag in the RSCAN0CFSTSa register to 1 (a transmit/receive FIFO transmit interrupt request is present). The program can clear the CFTXIF flag.

(5) If another CAN node on the CAN bus is transmitting data (not from transmit/receive FIFO buffer b), transmit/receive FIFO buffers cannot be disabled immediately even if the CFE bit in the RSCAN0CFCCb register is cleared to 0 (no transmit/receive FIFO buffer is used) during transmit priority determination. (The CFEMP flag in the RSCAN0CFSTSb register is not set to 1 (the transmit/receive FIFO buffer contains no message (buffer empty)) immediately.)

(6) After the internal processing time has passed, transmit/receive FIFO buffers are disabled and the CFMC[7:0] bits in the RSCAN0CFSTSb register are cleared to 00_H and the CFEMP flag is set to 1. When the transmit/receive FIFO buffer is not transmitting data and is not selected as the next transmit buffer and priority determination is not in progress, the transmit/receive FIFO buffer is immediately disabled. (The CFMC[7:0] bits are cleared to 00_H and the CFEMP flag is set to 1.)

17.10.3.3 Procedure for Transmission from the Transmit Queue

Figure 17.32 shows the procedure for transmission from the transmit queue.

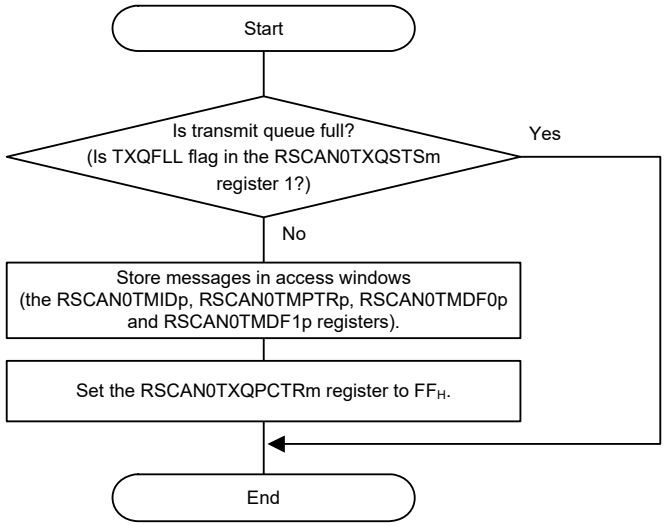

Note: p = m × 16 + 15, m = 0 to 2

Figure 17.32 Procedure for Transmission from the Transmit Queue

17.10.3.4 Transmit History Buffer Reading Procedure

Transmit history data can be read from the RSCAN0THLACCm register. The next data can be accessed by writing FF_H to the corresponding RSCAN0THLPCTRm register (m = 0 to 2) after reading a set of data. **Figure 17.33** shows the transmit history buffer reading procedure.

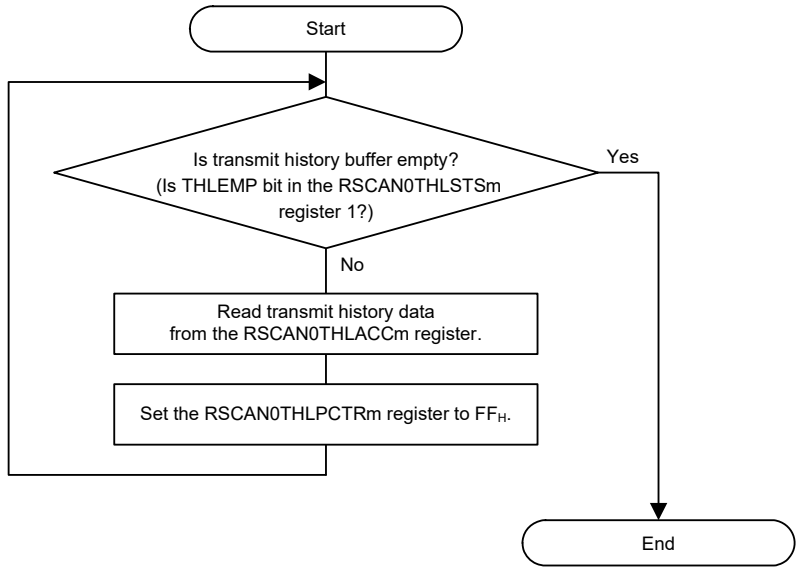

Note: m = 0 to 2

Figure 17.33 Transmit History Buffer Reading Procedure

17.10.4 Test Settings

17.10.4.1 Self-Test Mode Setting Procedure

Self-test mode allows communication test on a channel basis by enabling a CAN node to receive its own transmitted messages.

Figure 17.34 shows the self-test mode setting procedure.

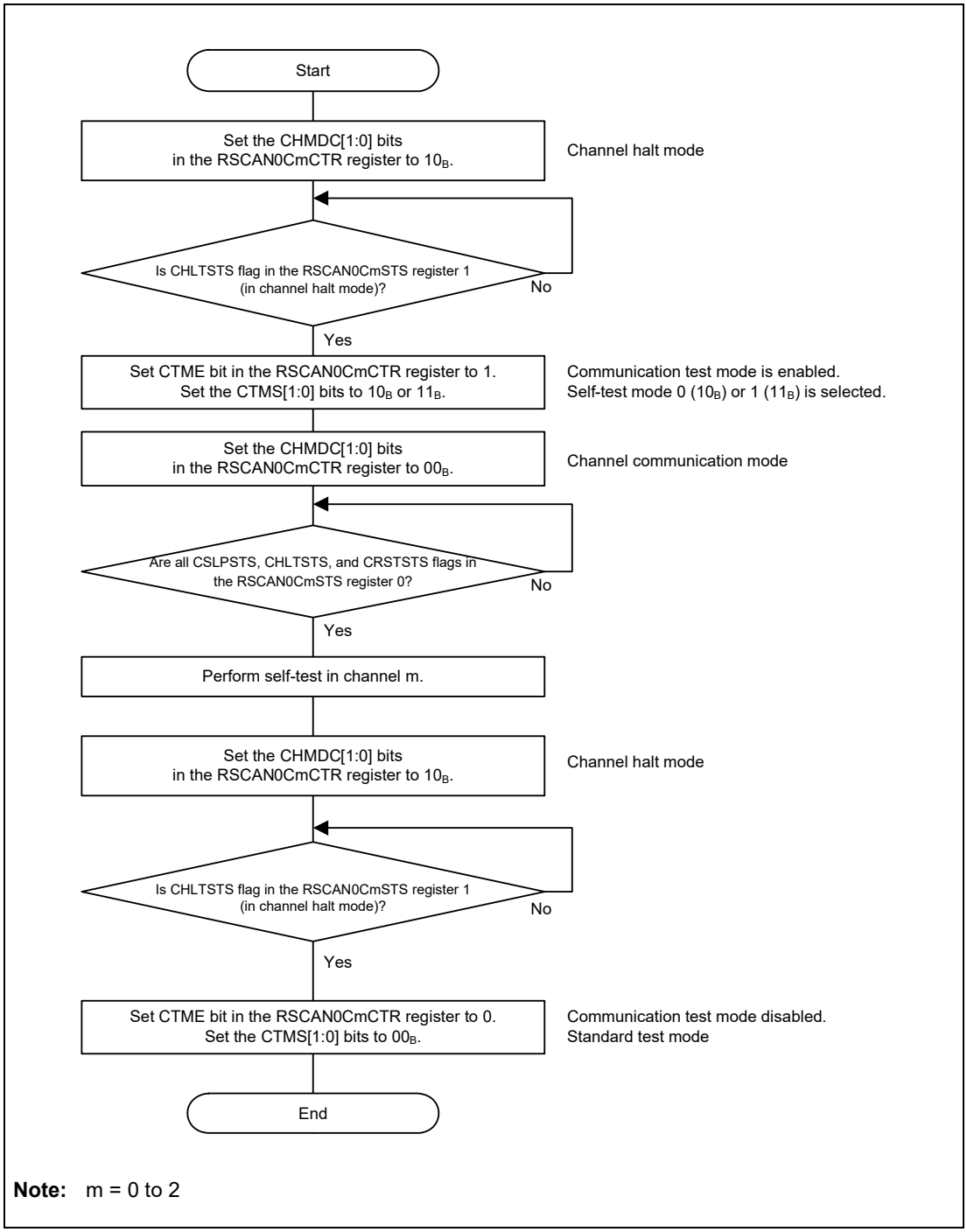

Note: m = 0 to 2

Figure 17.34 Self-Test Mode Setting Procedure

17.10.4.2 Procedure for Releasing the Protection

Since the global test function in **Table 17.96** is protected, write the protection release data 1 and release data 2 in succession to the LOCK[15:0] bits in the RSCAN0GLOCKK register, then set the target test bit to 1.

Table 17.96 Protection Release Data for Test Function

Test Function	Protection Release Data 1	Protection Release Data 2	Target Bit
RAM test	7575_H	$8A8A_H$	RTME bit in the RSCAN0GTSTCTR register

If an incorrect value is written to the LOCK[15:0] bits, restart from writing the protection release data 1. **Figure 17.35** shows the procedure for releasing the protection.

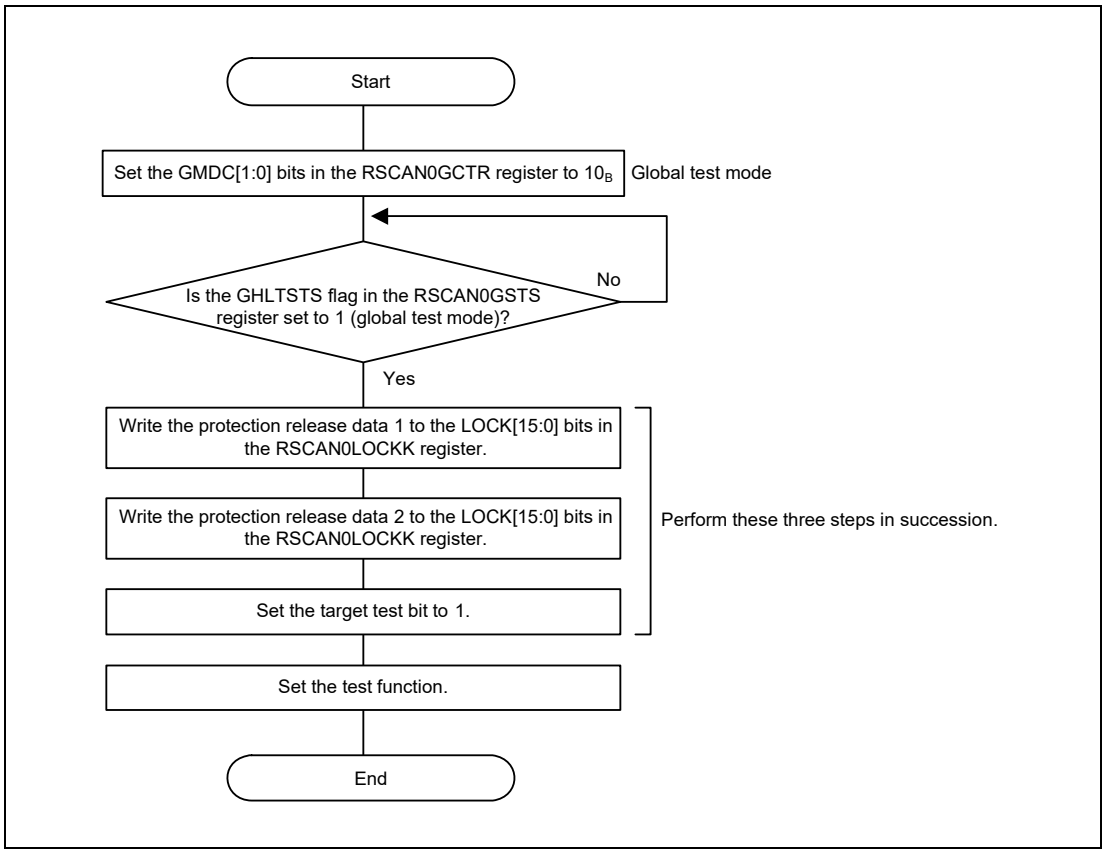

Figure 17.35 Protection Release Procedure

17.10.4.3 RAM Test Setting Procedure

RAM tests include CAN RAM read/write test. The read/write test verifies that data written to the RAM is read correctly. Before closing the RAM test, write 0000 0000_H to all pages of the CAN RAM.

Figure 17.36 shows the RAM test setting procedure.

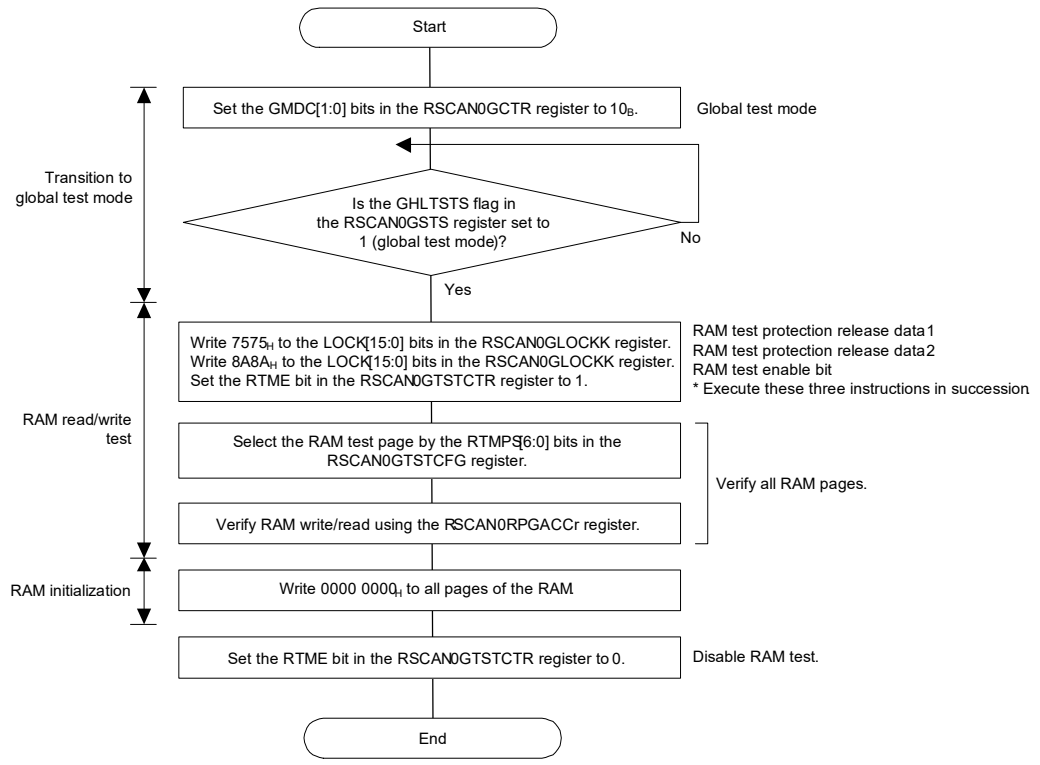

Note: r = 0 to 63

Figure 17.36 RAM Test Setting Procedure

17.10.4.4 Inter-Channel Communication Test Setting Procedure

Communication testing can be performed by transmitting and receiving data between different channels.

Figure 17.37 shows the inter-channel communication test setting procedure.

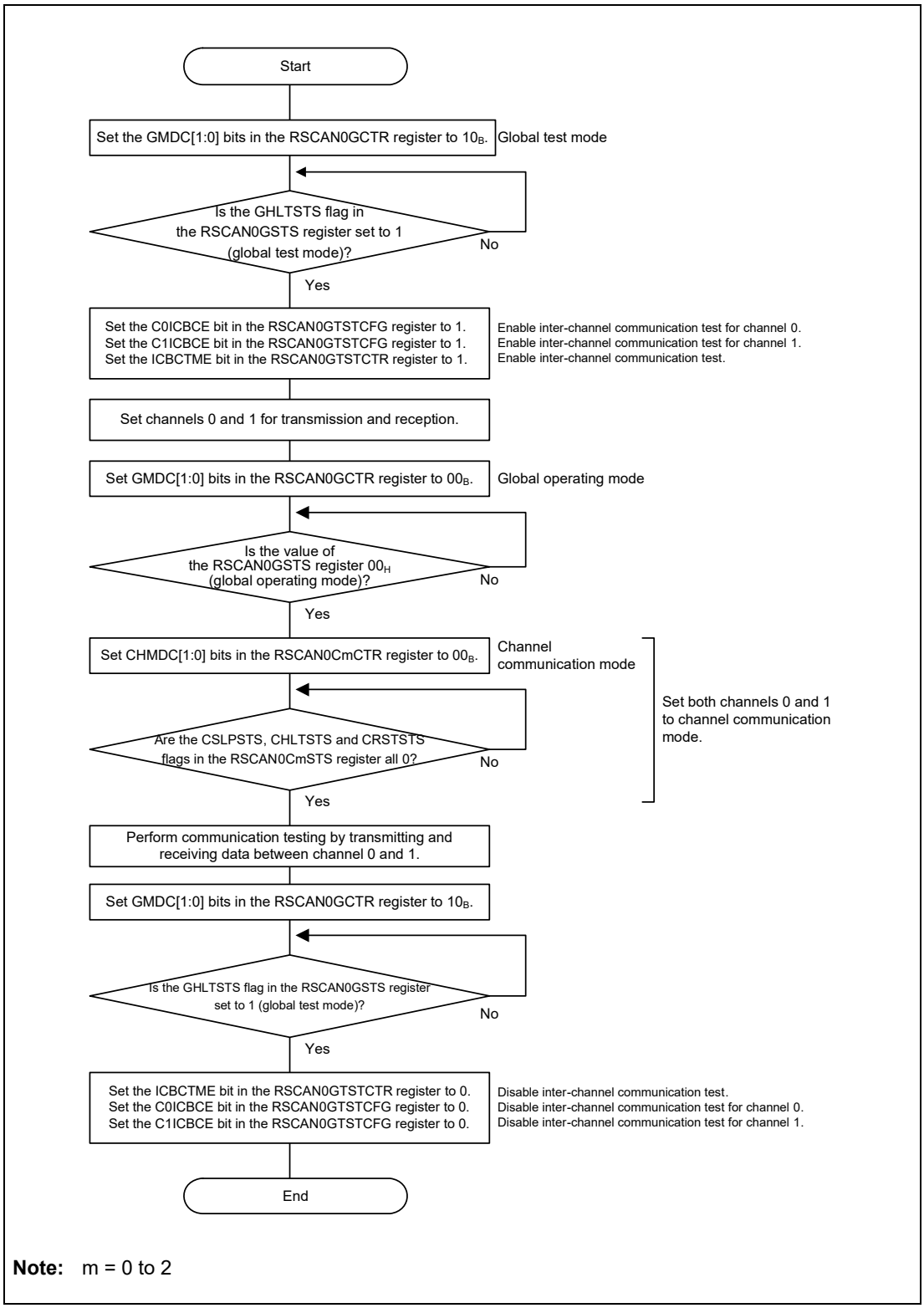

Note: m = 0 to 2

Figure 17.37 Inter-Channel Communication Test Setting Procedure (Example of Communication Test between Channel 0 and Channel 1)

17.11 Notes on the RS-CAN Module

- When changing a global mode, check the GSLPSTS, GHLTSTS, and GRSTSTS flags in the RSCAN0GSTS register for transitions. When changing a channel mode, check the CSLPSTS, CHLTSTS, and CRSTSTS flags in the RSCAN0CmSTS register (m = 0 to 2) for transitions.
- The acceptance filter processing checks receive rules sequentially in ascending order from the minimum rule number. If the same ID, IDE bit, or RTR bit value is set for multiple receive rules, the minimum number of receive rule is used for the acceptance filter processing. If the message does not pass through the subsequent DLC filter processing, the data processing is terminated without returning to the acceptance filter processing and the message is not stored in the buffer.
- When linking transmit buffers to transmit/receive FIFO buffers or allocating transmit buffers to transmit queues, set the control register (RSCAN0TMCp) of the corresponding transmit buffer to 00_H. The status register (RSCAN0TMSTSp) of the corresponding transmit buffer should not be used. Flags in other status registers (registers RSCAN0TMTRSTS0, RSCAN0TMTRSTS1, RSCAN0TMTARSTS0, RSCAN0TMTARSTS1, RSCAN0TMTCSTS0, RSCAN0TMTCSTS1, and RSCAN0TMTASTS0, RSCAN0TMTASTS1), which correspond to transmit buffers linked to transmit/receive FIFO buffers or allocated to transmit queues remain unchanged. Set the enable bit in the corresponding interrupt enable register (registers RSCAN0TMIEC0, RSCAN0TMIEC1) to 0 (transmit buffer interrupt is disabled).
- Transmit buffers that are linked to transmit/receive FIFO buffers must not be allocated to transmit queues.
- Only a single transmit/receive FIFO buffer can be linked to a transmit buffer. Do not link two or more transmit/receive FIFO buffers to transmit buffers of the same number.
- When the CANm bit time clock is selected as a timestamp counter clock source, the timestamp counter stops when the corresponding channel has transitioned to channel reset mode or channel halt mode.
- In case of an attempt to store a new received message when the receive FIFO buffer and the transmit/receive FIFO buffer are full, the new message is discarded. If you wish to store a new transmit message in the transmit/receive FIFO buffer or the transmit queue, check that the transmit/receive FIFO buffer or the transmit queue is not full.
- The values of unused receive buffers (RSCAN0RMIDq, RSCAN0RMPTRq, RSCAN0RMDF0q, and RSCAN0RMDF1q registers), receive FIFO buffer access registers (RSCAN0RFIDx, RSCAN0RFPTRx, RSCAN0RFDF0x, and RSCAN0RFDF1x registers), and transmit/receive FIFO buffer access registers (RSCAN0CFIDk, RSCAN0CFPTRk, RSCAN0CFDF0k, and RSCAN0CFDF1k registers) are undefined when the RS-CAN module transitions to global operation mode or global test mode after exiting from global reset mode.

Section 18 FlexRay (FLXA)

The FlexRay IP-module performs communication according to the FlexRay protocol specification v2.1. With maximum specified sample clock the bitrate is 10 MBit/s. Additional bus driver (BD) hardware is required for connection to the physical layer.

This section contains a generic description of the FlexRay.

The first part of this section describes all RH850/P1x specific properties, such as the number of channels, register base addresses, internal input/output signals, etc.

The remainder of this section describes the properties common to all versions of the RH850/P1x FlexRay.

18.1 Overview of RH850/P1x FlexRay

18.1.1 Number of Units and Channels

This microcontroller has the following number units of FlexRay.

Table 18.1 Number of Units

FlexRay	RH850/P1x
Number of units	1 (A ch, B ch)
Name	FLXAn

Table 18.2 Index

Index	Meaning
n	The number of the FlexRay indicated by the letter “n” (n = 0).
m	The register number is identified by the index “m”, for example, FLXAnFRESIDm for the even Sync ID register.
p	The flag number is indicated by the letter “p” (p = (m – 1) *32 to (m*32 – 1)).
q	The bit number is indicated by the letter “q” (q = m*32 to ((m+1)*32) – 1).

18.1.2 Register Base Addresses

All FlexRay register addresses are given as address offsets to the individual base address <FLXn_base>.

The base address <FLXn_base> of each FlexRay is listed in the following table:

Table 18.3 Register Base Addresses <FLXn_base>

FlexRay Channel	<FLXn_base> Address
FLXA0	$1002\ 0000_H$

18.1.3 Clock Supply

FlexRay provide one clock input.

Table 18.4 Clock Supply

Module	Clock	Supply Clock Name
FLXAn	Sample clock	High speed peripheral clock CLK_HSB
	Peripheral bus clock	

18.1.4 Interrupts

FlexRay can generate the following interrupt requests:

Table 18.5 Interrupt Requests

Function	Connected to
FlexRay0 interrupt	Interrupt Controller 194 (INTFLX0LINE0)
FlexRay1 interrupt	Interrupt Controller 195 (INTFLX0LINE1)
Timer 0 interrupt	Interrupt Controller 196 (INTFLX0TIM0)
Timer 1 interrupt	Interrupt Controller 197 (INTFLX0TIM1)
Timer 2 interrupt	Interrupt Controller 198 (INTFLX0TIM2)
FIFO transfer interrupt	Interrupt Controller 199 (INTFLX0FDA)
FIFO transfer warning interrupt	Interrupt Controller 200 (INTFLX0FW)
Output transfer warning interrupt	Interrupt Controller 201 (INTFLX0OW)
Output transfer end interrupt	Interrupt Controller 202 (INTFLX0OT)
Input queue full interrupt	Interrupt Controller 203 (INTFLX0IQF)
Input queue empty interrupt	Interrupt Controller 204 (INTFLX0IQE)

18.1.5 Reset Sources

FlexRay and registers of FlexRay are initialized by the following reset signal:

Table 18.6 Reset Signal

Modules	Reset Signal
FLXAn	Reset Controller SYSRES

18.1.6 I/O Signals

The I/O signals of the FlexRay are listed in the following table.

Table 18.7 FlexRay I/O Signals

FlexRay signals	Function	Connected to
FLXAn		
rxda_extfxr	Flex Ray0 channel A receive data input	Port FLX0RXDA
fxr_txda	Flex Ray0 channel A transmit data output	Port FLX0TXDA
fxr_txena_n	Flex Ray0 channel A transmit data enable	Port FLX0TXENA
rxdb_extfxr	Flex Ray0 channel B receive data input	Port FLX0RXDB
fxr_txdb	Flex Ray0 channel B transmit data output	Port FLX0TXDB
fxr_txenb_n	Flex Ray0 channel B transmit data enable	Port FLX0TXENB
stpwt_extfxr	Flexray0 stop watch trigger input	Port FLX0STPWT

18.1.7 Combinations of Pins and Ports

Combinations of FlexRay pins and ports are listed in the following table.

Table 18.8 Combinations of Pins and Ports

Function	Pin Name	Port Name	
		Group 1	Group 2
FLX0	FLX0RXDA	P4_2	P4_8*1
	FLX0RXDB	P4_3	P4_11*1
	FLX0STPWT	P4_4	P4_14*1
	FLX0TXDA	P4_0	P4_9*1
	FLX0TXDB	P4_5	P4_12*1
	FLX0TXENA	P4_1	P4_10*1
	FLX0TXENB	P4_6	P4_13*1

Note 1. Available in devices with 144-pin.

18.1.8 Functions

For communication on a FlexRay network, individual message buffers with up to 254 data bytes are configurable. The message buffer is a Message RAM that is configurable up to 128 message buffers. All functions concerning the handling of messages are implemented in the Message Handler. Those functions are the acceptance filtering, the transfer of messages between the two FlexRay Channel Protocol Controllers and the Message RAM, maintaining the transmission schedule as well as providing message status information.

The register set of the FlexRay IP-module can be accessed directly by an external Host via the module's Host interface. These registers are used to control/configure/monitor the FlexRay Channel Protocol Controllers, Message Handler, Global Time Unit, System Universal Control, Frame and Symbol Processing, Network Management, Interrupt Control, to access the Message RAM via Input / Output Buffer; and to control the data transfer between the Message RAM and the local RAM.

The FlexRay IP-module supports the following features:

Item	Specification
Communication	Conformance with FlexRay protocol specification v2.1
Data transfer rate	Up to 10 M bit/s on each channel
Data link layer clock frequency	80 MHz
Input/Output pins per channel	TxD, RxD, TxEN
FlexRay channels	2 (channels A and B)
Message buffer	Up to 128 message buffers are configurable. Message buffers are configurable with different payload length Each message buffer can be configured as a part of receive buffer, transfer buffer or receive FIFO. Filtering for slot counter, cycle counter or channel.
Message RAM	8-Kbyte message RAM can be configured as below. • 128 message buffers with up to 48-byte data section • 30 message buffers with 254-byte data section
FIFO	One configurable receive FIFO

Item	Specification
Message Buffer Access	Access by the host CPU through input/output buffer Input buffer: a message transferred to the message RAM is retained. Output buffer: a message read from the message RAM is retained.
	Access by data transfer function Input transfer: the contents of the message buffer is transferred from the local RAM to the message RAM by a request of the CPU Input transfer: the contents of the message buffer is transferred automatically to the local RAM from the message RAM
Network management	Supported
Interrupts	Maskable module interrupts
Timer	Two absolute timers One relative timer One stop watch timer

18.1.9 Block Diagram

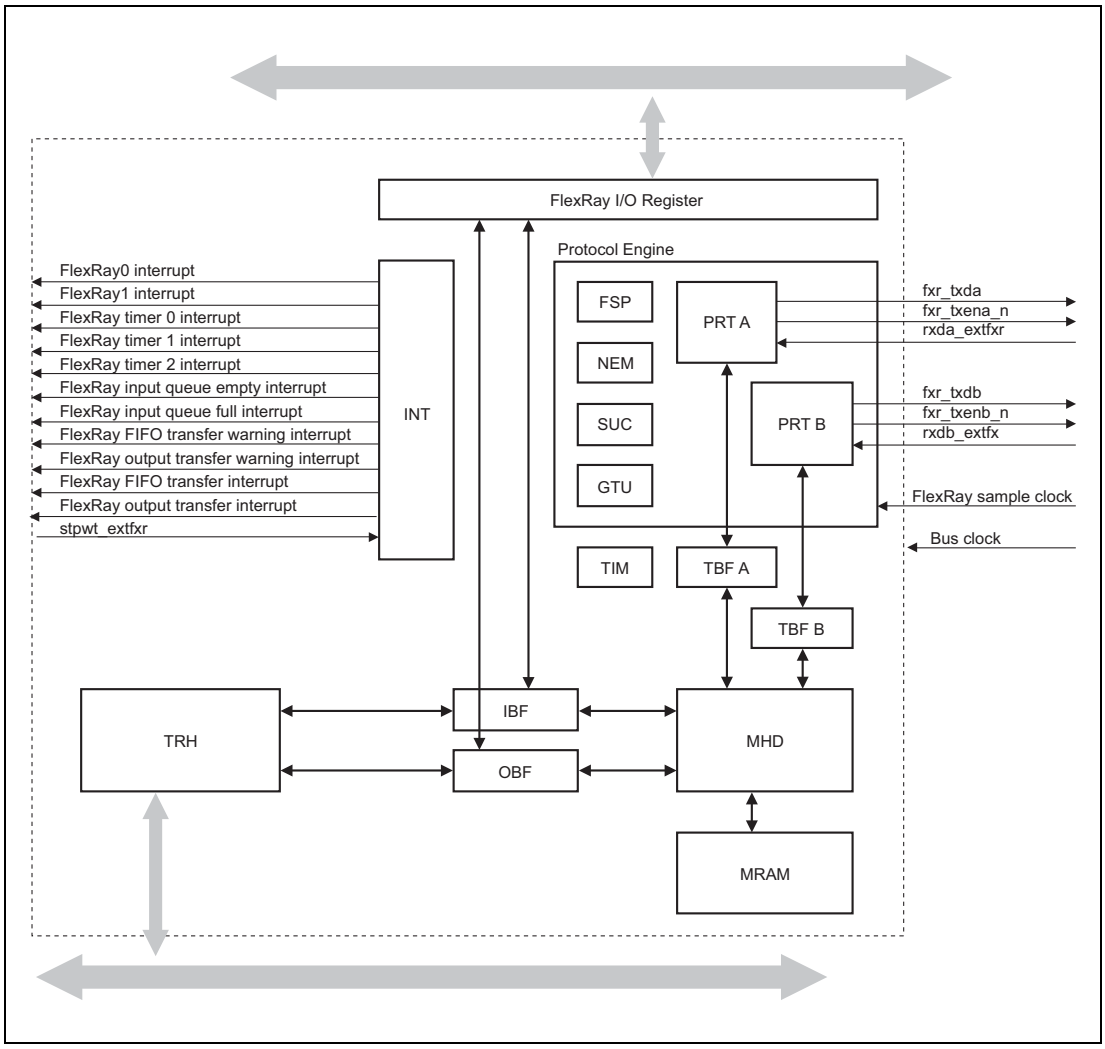

Figure 18.1 FlexRay IP Block Diagram

Input Buffer (IBF)

For write access to the message buffers configured in the Message RAM, the Host can write the header and data section for a specific message buffer to the Input Buffer. The Message Handler then transfers the data from the Input Buffer to the selected message buffer in the Message RAM.

Output Buffer (OBF)

For read access to a message buffer configured in the Message RAM the Message Handler transfers the selected message buffer to the Output Buffer. After the transfer has completed, the Host can read the header and data section of the transferred message buffer from the Output Buffer.

Message Handler (MHD)

The FlexRay Message Handler controls data transfers between the following components:

- Input / Output Buffer and Message RAM
- TBFRAMs of the two FlexRay Protocol Controllers and Message RAM

Message RAM (MRAM)

The Message RAM consists of a single-ported RAM that store up to 128 FlexRay message buffers together with the related configuration data (header and data partition).

TBFRAM (TBF A/B)

Stores the data section of two complete messages.

FlexRay Channel Protocol Controller (PRT A/B)

The FlexRay Channel Protocol Controllers consist of shift register and FlexRay protocol FSM. They are connected to the TBFRAMs for intermediate message storage and to the physical layer via bus driver BD.

They perform the following functionality:

- Control and check of bit timing
- Reception / transmission of FlexRay frames and symbols
- Check of header CRC
- Generation / check of frame CRC
- Interfacing to bus driver

Global Time Unit (GTU)

The Global Time Unit performs the following functions:

- Generation of microtick (µT)
- Generation of macrotick (MT)
- Fault tolerant clock synchronization by FTM algorithm
  - rate correction
  - offset correction
- Cycle counter
- Timing control of static segment
- Timing control of dynamic segment (minislotting)
- Support of external clock correction

System Universal Control (SUC)

The System Universal Control controls the following functions:

- Configuration
- Wakeup
- Startup
- Normal Operation
- Passive Operation

Frame and Symbol Processing (FSP)

The Frame and Symbol Processing controls the following functions:

- Checks the correct timing of frames and symbols
- Tests the syntactical and semantical correctness of received frames
- Sets the slot status flags

Network Management (NEM)

Handles the network management vector.

Interrupt Control (INT)

The Interrupt Controller performs the following functions:

- Provides error and status interrupt flags
- Enable / disable interrupt sources
- Assignment of interrupt sources to one of the two general module interrupt lines
- Enable / disable module interrupt lines

Timer (TIM)

The Timer module includes the following macrotick timer:

- one absolute timer
- one relative timer
- one stop watch timer

Transfer Handler (TRH)

Handles the data transfer between local RAM and FlexRay module.

The Transfer Handler supports the following transfer types:

- Transfer of buffer configuration data from the local RAM to the Message RAM
- Transfer of payload data for transmission buffers from the local RAM to the Message RAM
- Transfer of buffer configuration data and payload data for transmission buffer from the local RAM to the Message RAM
- Automatic transfer of payload data from receive buffer to the local RAM upon frame reception
- Automatic transfer of payload data, buffer configuration data and message buffer status data from

receive buffer to the local RAM upon frame reception

- Automatic transfer of buffer configuration data and message buffer status data from the dedicated transmit/receive buffer to the local RAM in response to slot status update
- Manual transfer of payload data, buffer configuration data and message buffer status data from the dedicated transmit/receive buffer to the local RAM.

18.2 Register

18.2.1 Register Map

The FlexRay module allocates an address space as shown in **Table 18.9**.

Within this specification the "Values after reset" refers to the microcontroller's HW reset. For registers in the address range 0010_H to $0FFF_H$ the "Value after reset" are also applicable when the SW reset (using bit FLXAnFROC.OE) is applied.

The addresses in this specification are listed as offsets from a base address. The base address <FLXn_base> must thus be added to the addresses.

For <FLXn_base>, refer to **Section 18.1.2, Register Base Addresses**.

Table 18.9 FlexRay Register Map (1/3)

Register Name	Symbol	Value after Reset	Address	Access Size
FlexRay Operation Control Register	FLXAnFROC	$0000\ 0000_H$	<FLXn_base> + 0004_H	8, 16, 32
FlexRay Operation Status Register	FLXAnFROS	$0000\ 0000_H$	<FLXn_base> + $000C_H$	8, 16, 32
FlexRay Lock Register	FLXAnFRLCK	$0000\ 0000_H$	<FLXn_base> + $001C_H$	8, 16, 32
FlexRay Error Interrupt Register	FLXAnFREIR	$0000\ 0000_H$	<FLXn_base> + 0020_H	8, 16, 32
FlexRay Status Interrupt Register	FLXAnFRSIR	$0000\ 0000_H$	<FLXn_base> + 0024_H	8, 16, 32
FlexRay Error Interrupt Line Select	FLXAnFREILS	$0000\ 0000_H$	<FLXn_base> + 0028_H	8, 16, 32
FlexRay Status Interrupt Line Select	FLXAnFRSILS	$0303\ FFFF_H$	<FLXn_base> + $002C_H$	8, 16, 32
FlexRay Error Interrupt Enable Set Register	FLXAnFREIES	$0000\ 0000_H$	<FLXn_base> + 0030_H	8, 16, 32
FlexRay Error Interrupt Enable Reset Register	FLXAnFREIER	$0000\ 0000_H$	<FLXn_base> + 0034_H	8, 16, 32
FlexRay Status Interrupt Enable Set Register	FLXAnFRSIES	$0000\ 0000_H$	<FLXn_base> + 0038_H	8, 16, 32
FlexRay Status Interrupt Enable Reset Register	FLXAnFRSIER	$0000\ 0000_H$	<FLXn_base> + $003C_H$	8, 16, 32
FlexRay Interrupt Line Enable Register	FLXAnFRILE	$0000\ 0000_H$	<FLXn_base> + 0040_H	8, 16, 32
FlexRay Timer 0 Configuration Register	FLXAnFRT0C	$0000\ 0000_H$	<FLXn_base> + 0044_H	8, 16, 32
FlexRay Timer 1 Configuration Register	FLXAnFRT1C	$0002\ 0000_H$	<FLXn_base> + 0048_H	8, 16, 32
FlexRay Stop Watch Register 1	FLXAnFRSTPW1	$0000\ 0000_H$	<FLXn_base> + $004C_H$	8, 16, 32
FlexRay Stop Watch Register 2	FLXAnFRSTPW2	$0000\ 0000_H$	<FLXn_base> + 0050_H	8, 16, 32
FlexRay SUC Configuration Register 1	FLXAnFRSUCC1	$0C40\ 1080_H$	<FLXn_base> + 0080_H	8, 16, 32
FlexRay SUC Configuration Register 2	FLXAnFRSUCC2	$0100\ 0504_H$	<FLXn_base> + 0084_H	8, 16, 32
FlexRay SUC Configuration Register 3	FLXAnFRSUCC3	$0000\ 0011_H$	<FLXn_base> + 0088_H	8, 16, 32
FlexRay NEM Configuration Register	FLXAnFRNEMC	$0000\ 0000_H$	<FLXn_base> + $008C_H$	8, 16, 32
FlexRay PRT Configuration Register 1	FLXAnFRPRTC1	$084C\ 0633_H$	<FLXn_base> + 0090_H	8, 16, 32
FlexRay PRT Configuration Register 2	FLXAnFRPRTC2	$0F2D\ 0A0E_H$	<FLXn_base> + 0094_H	8, 16, 32
FlexRay MHD Configuration Register	FLXAnFRMHDC	$0000\ 0000_H$	<FLXn_base> + 0098_H	8, 16, 32
FlexRay GTU Configuration Register 1	FLXAnFRGTUC1	$0000\ 0280_H$	<FLXn_base> + $00A0_H$	8, 16, 32
FlexRay GTU Configuration Register 2	FLXAnFRGTUC2	$0002\ 000A_H$	<FLXn_base> + $00A4_H$	8, 16, 32
FlexRay GTU Configuration Register 3	FLXAnFRGTUC3	$0202\ 0000_H$	<FLXn_base> + $00A8_H$	8, 16, 32
FlexRay GTU Configuration Register 4	FLXAnFRGTUC4	$0008\ 0007_H$	<FLXn_base> + $00AC_H$	8, 16, 32
FlexRay GTU Configuration Register 5	FLXAnFRGTUC5	$0E00\ 0000_H$	<FLXn_base> + $00B0_H$	8, 16, 32
FlexRay GTU Configuration Register 6	FLXAnFRGTUC6	$0002\ 0000_H$	<FLXn_base> + $00B4_H$	8, 16, 32
FlexRay GTU Configuration Register 7	FLXAnFRGTUC7	$0002\ 0004_H$	<FLXn_base> + $00B8_H$	8, 16, 32
FlexRay GTU Configuration Register 8	FLXAnFRGTUC8	$0000\ 0002_H$	<FLXn_base> + $00BC_H$	8, 16, 32
FlexRay GTU Configuration Register 9	FLXAnFRGTUC9	$0000\ 0101_H$	<FLXn_base> + $00C0_H$	8, 16, 32

Table 18.9 FlexRay Register Map (2/3)

Register Name	Symbol	Value after Reset	Address	Access Size
FlexRay GTU Configuration Register 10	FLXAnFRGTUC10	$0002\ 0005_H$	<FLXn_base> + $00C4_H$	8, 16, 32
FlexRay GTU Configuration Register 11	FLXAnFRGTUC11	$0000\ 0000_H$	<FLXn_base> + $00C8_H$	8, 16, 32
FlexRay CC Status Vector Register	FLXAnFRCCSV	$0010\ 4000_H$	<FLXn_base> + 0100_H	8, 16, 32
FlexRay CC Error Vector Register	FLXAnFRCCEV	$0000\ 0000_H$	<FLXn_base> + 0104_H	8, 16, 32
FlexRay Slot Counter Value Register	FLXAnFRSCV	$0000\ 0000_H$	<FLXn_base> + 0110_H	8, 16, 32
FlexRay Macrotick and Cycle Counter Value Register	FLXAnFRMTCCV	$0000\ 0000_H$	<FLXn_base> + 0114_H	8, 16, 32
FlexRay Rate Correction Value Register	FLXAnFRRCV	$0000\ 0000_H$	<FLXn_base> + 0118_H	8, 16, 32
FlexRay Offset Correction Value Register	FLXAnFROCV	$0000\ 0000_H$	<FLXn_base> + $011C_H$	8, 16, 32
FlexRay Sync Frame Status Register	FLXAnFRSFS	$0000\ 0000_H$	<FLXn_base> + 0120_H	8, 16, 32
FlexRay Symbol Window and NIT Status Register	FLXAnFRSWNIT	$0000\ 0000_H$	<FLXn_base> + 0124_H	8, 16, 32
FlexRay Aggregated Channel Status Register	FLXAnFRACS	$0000\ 0000_H$	<FLXn_base> + 0128_H	8, 16, 32
FlexRay Even Sync ID Register m (m = 1 to 15)	FLXAnFRESIDm (m = 1 to 15)	$0000\ 0000_H$	<FLXn_base> + 0130_H to <FLXn_base> + 0168_H (<FLXn_base> + 0130_H + (m–1)*4)	8, 16, 32
FlexRay Odd Sync ID Register m (m = 1 to 15)	FLXAnFROSIDm (m = 1 to 15)	$0000\ 0000_H$	<FLXn_base> + 0170_H to <FLXn_base> + $01A8_H$ (<FLXn_base> + 0170_H + (m–1)*4)	8, 16, 32
FlexRay Network Management Vector Register m (m = 1 to 3)	FLXAnFRNMVm (m = 1 to 3)	$0000\ 0000_H$	<FLXn_base> + $01B0_H$ to <FLXn_base> + $01B8_H$ (<FLXn_base> + $01B0_H$ + (m–1)*4)	8, 16, 32
FlexRay Message RAM Configuration Register	FLXAnFRMRC	$0180\ 0000_H$	<FLXn_base> + 0300_H	8, 16, 32
FlexRay FIFO Rejection Filter Register	FLXAnFRFRF	$0180\ 0000_H$	<FLXn_base> + 0304_H	8, 16, 32
FlexRay FIFO Rejection Filter Mask Register	FLXAnFRFRFM	$0000\ 0000_H$	<FLXn_base> + 0308_H	8, 16, 32
FlexRay FIFO Critical Level Register	FLXAnFRFCL	$0000\ 0080_H$	<FLXn_base> + $030C_H$	8, 16, 32
FlexRay Message Handler Status Register	FLXAnFRMHDS	$0000\ 0080_H$	<FLXn_base> + 0310_H	8, 16, 32
FlexRay Last Dynamic Transmit Slot Register	FLXAnFRLDTS	$0000\ 0000_H$	<FLXn_base> + 0314_H	8, 16, 32
FlexRay FIFO Status Register	FLXAnFRFSR	$0000\ 0000_H$	<FLXn_base> + 0318_H	8, 16, 32
FlexRay Message Handler Constraints Flags Register	FLXAnFRMHDF	$0000\ 0000_H$	<FLXn_base> + $031C_H$	8, 16, 32
FlexRay Transmission Register m (m= 1 to 4)	FLXAnFRTXRQi (i = 1 to 4)	$0000\ 0000_H$	<FLXn_base> + 0320_H to <FLXn_base> + $032C_H$ (<FLXn_base> + 0320_H + (m–1)*4)	8, 16, 32
FlexRay New Data Register m (m = 1 to 4)	FLXAnFRNDATm (m = 1 to 4)	$0000\ 0000_H$	<FLXn_base> + 0330_H to <FLXn_base> + $033C_H$ (<FLXn_base> + 0330_H + (m–1)*4)	8, 16, 32
FlexRay Message Buffer Status Changed Register m (m = 1 to 4)	FLXAnFRMBSCm (m = 1 to 4)	$0000\ 0000_H$	<FLXn_base> + 0340_H to <FLXn_base> + $034C_H$ (<FLXn_base> + 0340_H + (m–1)*4)	8, 16, 32
FlexRay Write Data Section Register m (m = 1 to 64)	FLXAnFRWRDSm (m = 1 to 64)	$0000\ 0000_H$	<FLXn_base> + 0400_H to <FLXn_base> + $04FC_H$ (<FLXn_base> + 0400_H + (m–1)*4)	8, 16, 32
FlexRay Write Header Section Register 1	FLXAnFRWRHS1	$0000\ 0000_H$	<FLXn_base> + 0500_H	8, 16, 32
FlexRay Write Header Section Register 2	FLXAnFRWRHS2	$0000\ 0000_H$	<FLXn_base> + 0504_H	8, 16, 32
FlexRay Write Header Section Register 3	FLXAnFRWRHS3	$0000\ 0000_H$	<FLXn_base> + 0508_H	8, 16, 32

Table 18.9 FlexRay Register Map (2/3)

Register Name	Symbol	Value after Reset	Address	Access Size
FlexRay GTU Configuration Register 10	FLXAnFRGTUC10	$0002\ 0005_H$	<FLXn_base> + $00C4_H$	8, 16, 32
FlexRay GTU Configuration Register 11	FLXAnFRGTUC11	$0000\ 0000_H$	<FLXn_base> + $00C8_H$	8, 16, 32
FlexRay CC Status Vector Register	FLXAnFRCCSV	$0010\ 4000_H$	<FLXn_base> + 0100_H	8, 16, 32
FlexRay CC Error Vector Register	FLXAnFRCCEV	$0000\ 0000_H$	<FLXn_base> + 0104_H	8, 16, 32
FlexRay Slot Counter Value Register	FLXAnFRSCV	$0000\ 0000_H$	<FLXn_base> + 0110_H	8, 16, 32
FlexRay Macrotick and Cycle Counter Value Register	FLXAnFRMTCCV	$0000\ 0000_H$	<FLXn_base> + 0114_H	8, 16, 32
FlexRay Rate Correction Value Register	FLXAnFRRCV	$0000\ 0000_H$	<FLXn_base> + 0118_H	8, 16, 32
FlexRay Offset Correction Value Register	FLXAnFROCV	$0000\ 0000_H$	<FLXn_base> + $011C_H$	8, 16, 32
FlexRay Sync Frame Status Register	FLXAnFRSFS	$0000\ 0000_H$	<FLXn_base> + 0120_H	8, 16, 32
FlexRay Symbol Window and NIT Status Register	FLXAnFRSWNIT	$0000\ 0000_H$	<FLXn_base> + 0124_H	8, 16, 32
FlexRay Aggregated Channel Status Register	FLXAnFRACS	$0000\ 0000_H$	<FLXn_base> + 0128_H	8, 16, 32
FlexRay Even Sync ID Register m (m = 1 to 15)	FLXAnFRESIDm (m = 1 to 15)	$0000\ 0000_H$	<FLXn_base> + 0130_H to <FLXn_base> + 0168_H (<FLXn_base> + 0130_H + (m–1)*4)	8, 16, 32
FlexRay Odd Sync ID Register m (m = 1 to 15)	FLXAnFROSIDm (m = 1 to 15)	$0000\ 0000_H$	<FLXn_base> + 0170_H to <FLXn_base> + $01A8_H$ (<FLXn_base> + 0170_H + (m–1)*4)	8, 16, 32
FlexRay Network Management Vector Register m (m = 1 to 3)	FLXAnFRNMVm (m = 1 to 3)	$0000\ 0000_H$	<FLXn_base> + $01B0_H$ to <FLXn_base> + $01B8_H$ (<FLXn_base> + $01B0_H$ + (m–1)*4)	8, 16, 32
FlexRay Message RAM Configuration Register	FLXAnFRMRC	$0180\ 0000_H$	<FLXn_base> + 0300_H	8, 16, 32
FlexRay FIFO Rejection Filter Register	FLXAnFRFRF	$0180\ 0000_H$	<FLXn_base> + 0304_H	8, 16, 32
FlexRay FIFO Rejection Filter Mask Register	FLXAnFRFRFM	$0000\ 0000_H$	<FLXn_base> + 0308_H	8, 16, 32
FlexRay FIFO Critical Level Register	FLXAnFRFCL	$0000\ 0080_H$	<FLXn_base> + $030C_H$	8, 16, 32
FlexRay Message Handler Status Register	FLXAnFRMHDS	$0000\ 0080_H$	<FLXn_base> + 0310_H	8, 16, 32
FlexRay Last Dynamic Transmit Slot Register	FLXAnFRLDTS	$0000\ 0000_H$	<FLXn_base> + 0314_H	8, 16, 32
FlexRay FIFO Status Register	FLXAnFRFSR	$0000\ 0000_H$	<FLXn_base> + 0318_H	8, 16, 32
FlexRay Message Handler Constraints Flags Register	FLXAnFRMHDF	$0000\ 0000_H$	<FLXn_base> + $031C_H$	8, 16, 32
FlexRay Transmission Register m (m= 1 to 4)	FLXAnFRTXRQi (i = 1 to 4)	$0000\ 0000_H$	<FLXn_base> + 0320_H to <FLXn_base> + $032C_H$ (<FLXn_base> + 0320_H + (m–1)*4)	8, 16, 32
FlexRay New Data Register m (m = 1 to 4)	FLXAnFRNDATm (m = 1 to 4)	$0000\ 0000_H$	<FLXn_base> + 0330_H to <FLXn_base> + $033C_H$ (<FLXn_base> + 0330_H + (m–1)*4)	8, 16, 32
FlexRay Message Buffer Status Changed Register m (m = 1 to 4)	FLXAnFRMBSCm (m = 1 to 4)	$0000\ 0000_H$	<FLXn_base> + 0340_H to <FLXn_base> + $034C_H$ (<FLXn_base> + 0340_H + (m–1)*4)	8, 16, 32
FlexRay Write Data Section Register m (m = 1 to 64)	FLXAnFRWRDSm (m = 1 to 64)	$0000\ 0000_H$	<FLXn_base> + 0400_H to <FLXn_base> + $04FC_H$ (<FLXn_base> + 0400_H + (m–1)*4)	8, 16, 32
FlexRay Write Header Section Register 1	FLXAnFRWRHS1	$0000\ 0000_H$	<FLXn_base> + 0500_H	8, 16, 32
FlexRay Write Header Section Register 2	FLXAnFRWRHS2	$0000\ 0000_H$	<FLXn_base> + 0504_H	8, 16, 32
FlexRay Write Header Section Register 3	FLXAnFRWRHS3	$0000\ 0000_H$	<FLXn_base> + 0508_H	8, 16, 32

Table 18.9 FlexRay Register Map (3/3)

Register Name	Symbol	Value after Reset	Address	Access Size
FlexRay Input Buffer Command Mask Register	FLXAnFRIBCM	0000 0000_H	<FLXn_base> + 0510_H	8, 16, 32
FlexRay Input Buffer Command Request Register	FLXAnFRIBCR	0000 0000_H	<FLXn_base> + 0514_H	8, 16, 32
FlexRay Read Data Section Register m (m = 1 to 64)	FLXAnFRRDDSm (m = 1 to 64)	0000 0000_H	<FLXn_base> + 0600_H to <FLXn_base> + $06FC_H$ (<FLXn_base> + 0600_H + (m–1)*4)	8, 16, 32
FlexRay Read Header Section Register 1	FLXAnFRRDHS1	0000 0000_H	<FLXn_base> + 0700_H	8, 16, 32
FlexRay Read Header Section Register 2	FLXAnFRRDHS2	0000 0000_H	<FLXn_base> + 0704_H	8, 16, 32
FlexRay Read Header Section Register 3	FLXAnFRRDHS3	0000 0000_H	<FLXn_base> + 0708_H	8, 16, 32
FlexRay Message Buffer Status Register	FLXAnFRMBS	0000 0000_H	<FLXn_base> + $070C_H$	8, 16, 32
FlexRay Output Buffer Command Mask Register	FLXAnFROBCM	0000 0000_H	<FLXn_base> + 0710_H	8, 16, 32
FlexRay Output Buffer Command Request Register	FLXAnFROBCR	0000 0000_H	<FLXn_base> + 0714_H	8, 16, 32
FlexRay Input Transfer Configuration Register	FLXAnFRITC	0000 0000_H	<FLXn_base> + 0800_H	8, 16, 32
FlexRay Output Transfer Configuration Register	FLXAnFROTC	0000 0000_H	<FLXn_base> + 0804_H	8, 16, 32
FlexRay Input pointer table Base Address Register	FLXAnFRIBA	0000 0000_H	<FLXn_base> + 0808_H	8, 16, 32
FlexRay FIFO pointer table Base Address Register	FLXAnFRFBA	0000 0000_H	<FLXn_base> + $080C_H$	8, 16, 32
FlexRay Output pointer table Base Address Register	FLXAnFROBA	0000 0000_H	<FLXn_base> + 0810_H	8, 16, 32
FlexRay Input Queue Control Register	FLXAnFRIQC	0000 0000_H	<FLXn_base> + 0814_H	8, 16, 32
FlexRay User Input transfer Request Register	FLXAnFRUIR	0000 0000_H	<FLXn_base> + 0818_H	8, 16, 32
FlexRay User Output transfer Request Register	FLXAnFRUOR	0000 0000_H	<FLXn_base> + $081C_H$	8, 16, 32
FlexRay Input Transfer Status Register	FLXAnFRITS	0000 0000_H	<FLXn_base> + 0820_H	8, 16, 32
FlexRay Output Transfer Status Register	FLXAnFROTS	0000 0000_H	<FLXn_base> + 0824_H	8, 16, 32
FlexRay Access Error Status Register	FLXAnFRAES	0000 0000_H	<FLXn_base> + 0828_H	8, 16, 32
FlexRay Access Error Address Register	FLXAnFRAEA	0000 0000_H	<FLXn_base> + $082C_H$	8, 16, 32
FlexRay message Data Available Register m (m = 0 to 3)	FLXAnFRDAm (m = 0 to 3)	0000 0000_H	<FLXn_base> + 0830_H to <FLXn_base> + $083C_H$ (<FLXn_base> + 0830_H + (m*4))	8, 16, 32
FlexRay H-Bus Configuration Register	FLXAnFRAHBC	0000 0000_H	<FLXn_base> + 0840_H	8, 16, 32
FlexRay Timer 2 Configuration Register	FLXAnFRT2C	0000 0000_H	<FLXn_base> + 0844_H	8, 16, 32

18.2.2 FlexRay Operation register

18.2.2.1 FLXAnFROC — FlexRay Operation Control Register

Access: This register can be read/written in 8-, 16-, or 32-bit units.

Address: <FLXn_base> + 0004_H

Value after reset: $0000\ 0000_H$

Bit	31	30	29	28	27	26	25	24	23	22	21	20	19	18	17	16
	—	—	—	—	—	—	—	—	—	—	—	—	—	T2IE	T1IE	T0IE
Value after reset	0	0	0	0	0	0	0	0	0	0	0	0	0	0	0	0
R/W	R	R	R	R	R	R	R	R	R	R	R	R	R	R/W	R/W	R/W

Bit	15	14	13	12	11	10	9	8	7	6	5	4	3	2	1	0
	—	—	—	—	—	—	—	—	OEP	—	—	—	—	—	—	OE
Value after reset	0	0	0	0	0	0	0	0	0	0	0	0	0	0	0	0
R/W	R	R	R	R	R	R	R	R	R/W	R	R	R	R	R	R	R/W

Table 18.10 FLXAnFROC Register Contents

Bit Position	Bit Name	Function
31 to 19	Reserved	When read, the value after reset is read. When writing, write the value after reset.
18	T2IE	Timer 2 interrupt enable Bit 0: Disabled 1: Enabled
17	T1IE	Timer 1 interrupt enable Bit 0: Disabled 1: Enabled
16	T0IE	Timer 0 interrupt enable Bit 0: Disabled 1: Enabled
15 to 8	Reserved	When read, the value after reset is read. When writing, write the value after reset.
7	OEP	Operation Enable bit Protection Bit 0: OE is unprotected 1: OE is protected
6 to 1	Reserved	When read, the value after reset is read. When writing, write the value after reset.
0	OE	Operation Enable Bit 0: Operation disabled, SW reset 1: Operation Enabled

(1) FLXAnFROC.T2IE

Timer 2 interrupt enable Bit

This bit controls the timer 2 interrupt.

0: Disabled

No interrupt will be requested and the timer 2 interrupt line will be released if pending.

1: Enabled

Timer 2 interrupt will be asserted when FLXAnFROTS.T2IS is 1.

(2) FLXAnFROC.T1IE

Timer 1 interrupt enable Bit

The user should only set this bit to 1 when timer 1 interrupt is not enabled in the FlexRay Status interrupt enable register (bit FLXAnFRSIES.TI1E should be 0).

This bit controls the timer 1 interrupt.

0: Disabled

No interrupt will be requested and the timer 1 interrupt line will be released if pending.

1: Enabled

Timer 1 interrupt will be asserted when bit FLXAnFROTS.T1IS is 1.

(3) FLXAnFROC.T0IE

Timer 0 interrupt enable Bit

The user should only set this bit to 1 when timer 0 interrupt is not enabled in the FlexRay Status interrupt enable register (bit FLXAnFRSIES.TI0E should be 0).

This bit controls the timer 0 interrupt.

0: Disabled

No interrupt will be requested and the timer 0 interrupt line will be released if pending.

1: Enabled

Timer 0 interrupt will be asserted when bit FLXAnFROTS.T0IS is 1.

(4) FLXAnFROC.OEP

Operation Enable bit Protection Bit

This bit protects against unintended write access to the OE bit.

0: OE bit is unprotected

Write access to the OE bit is enabled

1: OE bit is protected

Write access to the OE bit is disabled

(5) FLXAnFROC.OE

Operation Enable Bit

The user can only write to this bit when bit FLXAnFROC.OEP is 0.

The user should only write this bit with 0 when bit FLXAnFROS.OS is 1.

The user should only write this bit with 1 when bit FLXAnFROS.OS is 0 and the FlexRay sample clock is enabled.

This bit controls the operation state and serves the software reset of the FlexRay module. The operation status bit (FLXAnFROS.OS) indicates whether the FlexRay module is in reset state or not.

0: Operation disabled, SW reset

Forcibly moves the FlexRay module to its reset state, whatever the state of the FlexRay module is.

1: Operation Enabled

Reset state of the FlexRay module is released.

18.2.2.2 FLXAnFROS — FlexRay Operation Status Register

Access: This register can be read/written in 8-, 16-, or 32-bit units.

Address: <FLXn_base> + $000C_H$

Value after reset: $0000\ 0000_H$

Bit	31	30	29	28	27	26	25	24	23	22	21	20	19	18	17	16
	—	—	—	—	—	—	—	—	—	—	—	—	—	T2IS	T1IS	T0IS
Value after reset	0	0	0	0	0	0	0	0	0	0	0	0	0	0	0	0
R/W	R	R	R	R	R	R	R	R	R	R	R	R	R	R/W	R/W	R/W

Bit	15	14	13	12	11	10	9	8	7	6	5	4	3	2	1	0
	—	—	—	—	—	—	—	—	—	—	—	—	—	—	—	OS
Value after reset	0	0	0	0	0	0	0	0	0	0	0	0	0	0	0	0
R/W	R	R	R	R	R	R	R	R	R	R	R	R	R	R	R	R

Table 18.11 FLXAnFROS Register Contents

Bit Position	Bit Name	Function
31 to 19	Reserved	When read, the value after reset is read. When writing, write the value after reset.
18	T2IS	Timer 2 Interrupt Status Bit 0: Timer 2 has not matched the conditions configured in the FLXAnFRT2C register 1: Timer 2 matched the conditions configured in the FLXAnFRT2C register
17	T1IS	Timer 1 Interrupt Status Bit 0: Timer 1 has not matched the conditions configured in the FLXAnFRT1C register 1: Timer 1 matched the conditions configured in the FLXAnFRT1C register
16	T0IS	Timer 0 Interrupt Status Bit 0: Timer 0 has not matched the conditions configured in the FLXAnFRT0C register 1: Timer 0 matched the conditions configured in the FLXAnFRT0C register
15 to 1	Reserved	When read, the value after reset is read. When writing, write the value after reset.
0	OS	Operation Status Bit 0: Operation disabled, reset state 1: Operation enabled

(1) FLXAnFROS.T2IS

Timer 2 Interrupt Status Bit

Writing 0 has no effect on the bit value.

This bit indicates that the timer 2 has matched the state configured in the FLXAnFRT2C register.

When the FLXAnFROC.T2IE bit is enabled and the FLXAnFROS.T2IS bit is set to 1, the timer 2 interrupt is generated.

[Clearing condition]

- This bit is cleared by writing 1 to the FLXAnFROS.T2IS bit.
- This bit is cleared when the FLXAnFROS.OS bit changes from 1 to 0.

[Setting condition]

- This bit is set when the state matches the state configured in the FLXAnFRT2C register.

(2) FLXAnFROS.T1IS

Timer 1 Interrupt Status Bit

Writing 0 has no effect on the bit value.

This bit indicates that the timer 1 has matched the state configured in the FLXAnFRT1C register.

When the FLXAnFROC.T1IE bit is enabled and the FLXAnFROS.T1IS bit is set to 1, the timer 1 interrupt is generated.

[Clearing condition]

- This bit is cleared by writing 1 to the FLXAnFROS.T1IS bit.
  This bit is cleared when the FLXAnFROS.OS bit changes from 1 to 0.

[Setting condition]

- This bit is set when the state becomes the state configured in the FLXAnFRT1C register.

(3) FLXAnFROS.T0IS

Timer 0 Interrupt Status Bit

Writing 0 has no effect on the bit value.

This bit indicates that the timer 0 has matched the state configured in the FLXAnFRT0C register.

When the FLXAnFROC.T0IE bit is enabled and the FLXAnFROS.T0IS bit is set to 1, the timer 0 interrupt is generated.

[Clearing condition]

- This bit is cleared by writing 1 to the FLXAnFROS.T0IS bit.
- This bit is cleared when the FLXAnFROS.OS bit changes from 1 to 0.

[Setting condition]

- This bit is set when the state becomes the state configured in the FLXAnFRT0C register.

(4) FLXAnFROS.OS

Operation Status Bit

This bit represents if the FlexRay module is in the reset or the operation state.

When bit FLXAnFROS.OS is 0 the FlexRay module gets initialized and registers mapped to the address area <FLXn_base>+ 0010_H to <FLXn_base> + $0FFF_H$ cannot be accessed; read access from these registers will return undefined data.

When bit FLXAnFROS.OS is 1 it is possible to access to the address area <FLXn_base> + 0010_H to <FLXn_base> + $0FFF_H$ and to perform FlexRay communication.

When bit FLXAnFROS.OS changes from 0 to 1 all registers in the address range <FLXn_base> + 0010_H to <FLXn_base> + $0FFF_H$ are set to the “Values after reset”.

[Clearing condition]

- When bit FLXAnFROC.OE is set to 0. It takes up to two peripheral bus clock cycles until bit FLXAnFROS.OS is set to 0.

[Setting condition]

- When bit FLXAnFROC.OE is set to 1 it takes up to four peripheral clock cycles of the clock with the lower frequency out of the FlexRay sample clock and peripheral bus clock until bit FLXAnFROS.OS is set to 1.

18.2.3 Special Registers

18.2.3.1 FLXAnFRLCK — FlexRay Lock Register

Access: This register can be read/written in 8-, 16-, or 32-bit units.

Address: <FLXn_base> + $001C_H$

Value after reset: $0000\ 0000_H$

Bit	31	30	29	28	27	26	25	24	23	22	21	20	19	18	17	16
	—	—	—	—	—	—	—	—	—	—	—	—	—	—	—	—
Value after reset	0	0	0	0	0	0	0	0	0	0	0	0	0	0	0	0
R/W	R	R	R	R	R	R	R	R	R	R	R	R	R	R	R	R

Bit	15	14	13	12	11	10	9	8	7	6	5	4	3	2	1	0
	—	—	—	—	—	—	—	—	CLK[7:0]							
Value after reset	0	0	0	0	0	0	0	0	0	0	0	0	0	0	0	0
R/W	R	R	R	R	R	R	R	R	R/W	R/W	R/W	R/W	R/W	R/W	R/W	R/W

Table 18.12 FLXAnFRLCK Register Contents

Bit	Symbol	Function
31 to 8	Reserved	When read, the value after reset is read. When writing, write the value after reset.
7 to 0	CLK[7:0]	Configuration Lock Key Bit

(1) FLXAnFRLCK.CLK

Configuration Lock Key Bit

The Lock Register is write-only. Reading the register will return $0000\ 0000_H$.

To leave CONFIG state by writing bits FLXAnFRSUCC1.CMD[3:0] (command READY), the write operation has to be directly preceded by two write accesses to the Configuration Lock Key (unlock sequence). If the write sequence below is interrupted by other write accesses between the second write to the Configuration Lock Key and the write access to the FLXAnFRSUCC1 register, the CC remains in CONFIG state and the sequence has to be repeated.

First write: Bits FLXAnFRLCK.CLK[7:0] = “$1100\ 1110_B$” (CE_H)

Second write: Bits FLXAnFRLCK.CLK[7:0] = “$0011\ 0001_B$” (31_H)

Third write: Bits FLXAnFRSUCC1.CMD[3:0]

CAUTION

In case that the Host uses 8/16-bit accesses to write the listed bit fields, the programmer has to ensure that no “dummy accesses” e.g. to the remaining register bytes / words are inserted by the compiler.

18.2.4 Interrupt Registers

18.2.4.1 FLXAnFREIR — FlexRay Error Interrupt Register

The flags are set when the CC detects one of the listed error conditions. The flags remain set until the Host clears them.

Access: This register can be read/written in 8-, 16-, or 32-bit units.

Address: <FLXn_base> + 0020_H

Value after reset: $0000\ 0000_H$

Bit	31	30	29	28	27	26	25	24	23	22	21	20	19	18	17	16
	—	—	—	—	—	TABB	LTVB	EDB	—	—	—	—	—	TABA	LTVA	EDA
Value after reset	0	0	0	0	0	0	0	0	0	0	0	0	0	0	0	0
R/W	R	R	R	R	R	R/W	R/W	R/W	R	R	R	R	R	R/W	R/W	R/W

Bit	15	14	13	12	11	10	9	8	7	6	5	4	3	2	1	0
	—	—	—	—	MHF	IOBA	IIBA	EFA	RFO	AERR	CCL	CCF	SFO	SFBM	CNA	PEMC
Value after reset	0	0	0	0	0	0	0	0	0	0	0	0	0	0	0	0
R/W	R	R	R	R	R/W	R/W	R/W	R/W	R/W	R/W	R/W	R/W	R/W	R/W	R/W	R/W

Table 18.13 FLXAnFREIR Register Contents (1/2)

Bit Position	Bit Name	Function
31 to 27	Reserved	When read, the value after reset is read. When writing, write the value after reset.
26	TABB	Transmission Across Boundary Channel B Flag 0: No transmission across slot boundary detected on channel B 1: Transmission across slot boundary detected on channel B
25	LTVB	Latest Transmit Violation Channel B Flag 0: No latest transmit violation detected on channel B 1: Latest transmit violation detected on channel B
24	EDB	Error Detected on Channel B Flag 0: No error detected on channel B 1: Error detected on channel B
23 to 19	Reserved	When read, the value after reset is read. When writing, write the value after reset.
18	TABA	Transmission Across Boundary Channel A Flag 0: No transmission across slot boundary detected on channel A 1: Transmission across slot boundary detected on channel A
17	LTVA	Latest Transmit Violation Channel A Flag 0: No latest transmit violation detected on channel A 1: Latest transmit violation detected on channel A
16	EDA	Error Detected on Channel A Flag 0: No error detected on channel A 1: Error detected on channel A
15 to 12	Reserved	When read, the value after reset is read. When writing, write the value after reset.
11	MHF	Message Handler Constraints Flag 0: No Message Handler failure detected 1: Message Handler failure detected
10	IOBA	Illegal Output buffer Access Flag 0: No illegal Host access to Output Buffer occurred 1: Illegal Host access to Output Buffer occurred

Table 18.13 FLXAnFREIR Register Contents (2/2)

Bit Position	Bit Name	Function
9	IIBA	Illegal Input Buffer Access Flag 0: No illegal Host access to Input Buffer occurred 1: Illegal Host access to Input Buffer occurred
8	EFA	Empty FIFO Access Flag 0: No Host access to empty FIFO occurred 1: Host access to empty FIFO occurred
7	RFO	Receive FIFO Overrun Flag 0: No receive FIFO overrun detected 1: A receive FIFO overrun has occurred
6	AERR	Access error flag Flag 0: Access error is not detected. 1: Access error is detected.
5	CCL	CHI Command Locked Flag 0: CHI command accepted 1: CHI command not accepted
4	CCF	Clock Correction Failure Flag 0: No clock correction error 1: Clock correction failed
3	SFO	Sync Frame Overflow Flag 0: Number of received sync frames ≤ the FLXAnFRGTUC2.SNM bit 1: More sync frames received than configured by the FLXAnFRGTUC2.SNM bit
2	SFBM	Sync Frames Below Minimum Flag 0: Sync node: 1 or more sync frames received Non-sync node: 2 or more sync frames received 1: Less than the required minimum of sync frames received
1	CNA	Command Not Accepted Flag 0: CHI command accepted 1: CHI command not accepted
0	PEMC	POC Error Mode Changed Flag 0: Error mode has not changed 1: Error mode has changed

(1) FLXAnFREIR.TABB

Transmission Across Boundary Channel B Flag

Writing 0 has no effect on the bit value.

This bit is cleared when 1 is written.

The flag signals to the Host that a transmission across a slot boundary occurred for channel B.

(2) FLXAnFREIR.LTVB

Latest Transmit Violation Channel B Flag

Writing 0 has no effect on the bit value.

This bit is cleared when writing a 1 to it.

The flag signals a latest transmit violation on channel B to the Host.

(3) FLXAnFREIR.EDB

Error Detected on Channel B Flag

Writing 0 has no effect on the bit value.

This bit is cleared when writing a 1 to it.

This bit is set whenever one of bits FLXAnFRACS.SEDB, FLXAnFRACS.CEDB, FLXAnFRACS.CIB, and FLXAnFRACS.SBVB changes from 0 to 1.

(4) FLXAnFREIR.TABA

Transmission Across Boundary Channel A Flag

Writing 0 has no effect on the bit value.

This bit is cleared when writing a 1 to it.

The flag signals to the Host that a transmission across a slot boundary occurred for channel A.

(5) FLXAnFREIR.LTVA

Latest Transmit Violation Channel A Flag

Writing 0 has no effect on the bit value.

This bit is cleared when writing a 1 to it.

The flag signals a latest transmit violation on channel A to the Host.

(6) FLXAnFREIR.EDA

Error Detected on Channel A Flag

Writing 0 has no effect on the bit value.

This bit is cleared when writing a 1 to it.

This bit is set whenever one of bits FLXAnFRACS.SEDA, FLXAnFRACS.CEDA, FLXAnFRACS.CIA, and FLXAnFRACS.SBVA changes from 0 to 1.

(7) FLXAnFREIR.MHF

Message Handler Constraints Flag

Writing 0 has no effect on the bit value.

This bit is cleared when writing a 1 to it.

The flag signals a Message Handler constraints violation condition. It is set whenever one of the bits FLXAnFRMHDF.SNUA, FLXAnFRMHDF.SNUB, FLXAnFRMHDF.FNFA, FLXAnFRMHDF.FNFB, FLXAnFRMHDF.TBFA, FLXAnFRMHDF.TBFB, and FLXAnFRMHDF.WAHP changes from 0 to 1.

(8) FLXAnFREIR.IOBA

Illegal Output buffer Access Flag

Writing 0 has no effect on the bit value.

This bit is cleared when writing a 1 to it.

This flag is set by the CC when the Host requests the transfer of a message buffer from the Message RAM to the Output Buffer while bit FLXAnFROBCR.OBSYS is set to 1.

(9) FLXAnFREIR.IIBA

Illegal Input Buffer Access Flag

Writing 0 has no effect on the bit value.

This bit is cleared when writing a 1 to it.

This flag is set by the CC when the Host wants to modify a message buffer via Input Buffer and one of the following conditions applies:

1. The CC is not in CONFIG or DEFAULT_CONFIG state and the Host writes to the Input Buffer Command Request register to modify the
   - Header section of message buffer 0, 1 if configured for transmission in key slot
   - Header section of static message buffers with buffer number < FLXAnFRMRC.FDB[7:0] while bits FLXAnFRMRC.SEC[1:0] = “01”
   - Header section of any static or dynamic message buffer while bits FLXAnFRMRC.SEC[1:0] = “1x”
   - Header and / or data section of any message buffer belonging to the receive FIFO
2. The Host writes to any register of the Input Buffer while bit FLXAnFRIBCR.IBSYH is set to 1.

(10) FLXAnFREIR.EFA

Empty FIFO Access Flag

Writing 0 has no effect on the bit value.

This bit is cleared when writing a 1 to it.

This flag is set by the CC when the Host requests the transfer of a message from the receive FIFO via Output Buffer while the receive FIFO is empty.

(11) FLXAnFREIR.RFO

Receive FIFO Overrun Flag

Writing 0 has no effect on the bit value.

This bit is cleared when writing a 1 to it.

The flag is set by the CC when a receive FIFO overrun is detected. When a receive FIFO overrun occurs, the oldest message is overwritten with the actual received message. The actual state of the FIFO is monitored in register FLXAnFRFSR.

(12) FLXAnFREIR.AERR

Access error flag Flag

Writing 0 in this bit has no effect.

This bit is cleared when writing 1 to it.

Notifies of an access error.

When bit FLXAnFRMHDS.AMR, FLXAnFRMHDS.ATBF1, or FLXAnFRMHDS.ATBF2 changes from 0 to 1, this bit is set to 1.

(13) FLXAnFREIR.CCL

CHI Command Locked Flag

Writing 0 has no effect on the bit value.

This bit is cleared when writing a 1 to it.

The flag signals that the write access to the CHI command vector FLXAnFRSUCC1.CMD[3:0] bits was not successful because the execution of the previous CHI command has not yet completed. In this case bit FLXAnFREIR.CNA is also set to 1.

(14) FLXAnFREIR.CCF

Clock Correction Failure Flag

Writing 0 has no effect on the bit value.

This bit is cleared when writing a 1 to it.

This flag is set at the end of the communication cycle whenever one of the following errors occurred:

- Missing offset and / or rate correction
- Clock correction limit reached

The clock correction status is monitored in registers FLXAnFRCCEV and FLXAnFRSFS. A failure may occur during startup, therefore bit FLXAnFREIR.CCF should be set to 0 after the CC entered NORMAL_ACTIVE state.

(15) FLXAnFREIR.SFO

Sync Frame Overflow Flag

Writing 0 has no effect on the bit value.

This bit is cleared when writing a 1 to it.

It is set to 1 when either the number of sync frames received during the last communication cycle or the total number of different sync frame IDs received during the last double cycle exceeds the maximum number of sync frames as defined by the FLXAnFRGTUC2.SNM[3:0] bits.

(16) FLXAnFREIR.SFBM

Sync Frames Below Minimum Flag

Writing 0 has no effect on the bit value.

This bit is cleared when writing a 1 to it.

This flag is set to 1 at the end of a cycle if the number of sync frames received during the last communication cycle was below the limit required for rate or offset correction term calculation (i.e. missing offset and / or missing rate correction). The clock correction status is monitored in FLXAnFRCCEV and FLXAnFRSFS.

This flag may be set to 1 during startup. Therefore this flag should be set to 0 by the Host after the CC entered NORMAL_ACTIVE state.

(17) FLXAnFREIR.CNA

Command Not Accepted Flag

Writing 0 has no effect on the bit value.

This bit is cleared when writing a 1 to it.

The flag signals that the write access to the CHI command vector FLXAnFRSUCC1.CMD[3:0] bits was not successful because the requested command was not valid in the actual POC state, or because the CHI command was locked (FLXAnFREIR.CCL = 1).

(18) FLXAnFREIR.PEMC

POC Error Mode Changed Flag

Writing 0 has no effect on the bit value.

This bit is cleared when writing a 1 to it.

This flag is set to 1 whenever the error mode signaled by the FLXAnFRCCEV.ERRM[1:0] bits has changed.

18.2.4.2 FLXAnFRSIR — FlexRay Status Interrupt Register

The flags are set when the CC detects one of the listed events. The flags remain set until the Host clears them.

Access: This register can be read/written in 8-, 16-, or 32-bit units.

Address: <FLXn_base> + 0024_H

Value after reset: $0000\ 0000_H$

Bit	31	30	29	28	27	26	25	24	23	22	21	20	19	18	17	16
	—	—	—	—	—	—	MTSB	WUPB	—	—	—	—	—	—	MTSA	WUPA
Value after reset	0	0	0	0	0	0	0	0	0	0	0	0	0	0	0	0
R/W	R	R	R	R	R	R	R/W	R/W	R	R	R	R	R	R	R/W	R/W

Bit	15	14	13	12	11	10	9	8	7	6	5	4	3	2	1	0
	SDS	MBSI	SUCS	SWE	TOBC	TIBC	TI1	TI0	NMVC	RFCL	RFNE	RXI	TXI	CYCS	CAS	WST
Value after reset	0	0	0	0	0	0	0	0	0	0	0	0	0	0	0	0
R/W	R/W	R/W	R/W	R/W	R/W	R/W	R/W	R/W	R/W	R/W	R/W	R/W	R/W	R/W	R/W	R/W

Table 18.14 FLXAnFRSIR Register Contents (1/2)

Bit Position	Bit Name	Function
31 to 26	Reserved	When read, the value after reset is read. When writing, write the value after reset.
25	MTSB	MTS Received on Channel B Flag (vSS!ValidMTSB) 0: No MTS symbol received on channel B 1: MTS symbol received on channel B
24	WUPB	Wakeup Pattern Channel B Flag 0: No wakeup pattern received on channel B 1: Wakeup pattern received on channel B
23 to 18	Reserved	When read, the value after reset is read. When writing, write the value after reset.
17	MTSA	MTS Received on Channel A Flag (vSS!ValidMTSA) 0: No MTS symbol received on channel A 1: MTS symbol received on channel A
16	WUPA	Wakeup Pattern Channel A Flag 0: No wakeup pattern received on channel A 1: Wakeup pattern received on channel A
15	SDS	Start of Dynamic Segment Flag 0: Dynamic segment not yet started 1: Dynamic segment started
14	MBSI	Message Buffer Status Interrupt Flag 0: No message buffer status change of message buffer with MBI = 1 1: Message buffer status of at least one message buffer with MBI = 1 has changed
13	SUCS	Startup Completed Successfully Flag 0: No startup completed successfully 1: Startup completed successfully
12	SWE	Stop Watch Event Flag 0: No Stop Watch Event 1: Stop Watch Event occurred
11	TOBC	Transfer Output Buffer Completed Flag 0: No transfer completed 1: Transfer between Message RAM and Output Buffer completed

Table 18.14 FLXAnFRSIR Register Contents (2/2)

Bit Position	Bit Name	Function
10	TIBC	Transfer Input Buffer Completed Flag 0: No transfer completed 1: Transfer between Input Buffer and Message RAM completed
9	TI1	Timer Interrupt 1 Flag 0: No timer interrupt 1 1: Timer interrupt 1 occurred
8	TI0	Timer Interrupt 0 Flag 0: No timer interrupt 0 1: Timer interrupt 0 occurred
7	NMVC	Network Management Vector Changed Flag 0: No change in the network management vector 1: Network management vector changed
6	RFCL	Receive FIFO Critical Level Flag 0: Receive FIFO below critical level 1: Receive FIFO critical level reached
5	RFNE	Receive FIFO Not Empty Flag 0: Receive FIFO is empty 1: Receive FIFO is not empty
4	RXI	Receive Interrupt Flag 0: No ND flag of a receive buffer with MBI = 1 has been set to 1 1: At least one ND flag of a receive buffer with MBI = 1 has been set to 1
3	TXI	Transmit Interrupt Flag 0: No frame transmitted from a transmit buffer with MBI = 1 1: At least one frame was transmitted from a transmit buffer with MBI = 1
2	CYCS	Cycle Start Interrupt Flag 0: No communication cycle started 1: Communication cycle started
1	CAS	Collision Avoidance Symbol Flag 0: No bit pattern matching the CAS symbol received 1: Bit pattern matching the CAS symbol received
0	WST	Wakeup Status Flag 0: Wakeup status unchanged 1: Wakeup status changed

(1) FLXAnFRSIR.MTSB

MTS Received on Channel B Flag (vSS!ValidMTSB)

Writing 0 has no effect on the bit value.

This bit is cleared when writing a 1 to it.

Media Access Test symbol received on channel B during the preceding symbol window.

Updated by the CC for each channel at the end of the symbol window.

(2) FLXAnFRSIR.WUPB

Wakeup Pattern Channel B Flag

Writing 0 has no effect on the bit value.

This bit is cleared when writing a 1 to it.

This flag is set to 1 when a wakeup pattern was received on channel B in either of the following states:

- WAKEUP
- READY
- STARTUP

(3) FLXAnFRSIR.MTSA

MTS Received on Channel A Flag (vSS!ValidMTSA)

Writing 0 has no effect on the bit value.

This bit is cleared when writing a 1 to it.

Media Access Test symbol received on channel A during the preceding symbol window.

Updated by the CC for each channel at the end of the symbol window.

(4) FLXAnFRSIR.WUPA

Wakeup Pattern Channel A Flag

Writing 0 has no effect on the bit value.

This bit is cleared when writing a 1 to it.

This flag is set to 1 when a wakeup pattern was received on channel A in either of the following states:

- WAKEUP
- READY
- STARTUP

(5) FLXAnFRSIR.SDS

Start of Dynamic Segment Flag

Writing 0 has no effect on the bit value.

This bit is cleared when writing a 1 to it.

This flag is set by the CC when the dynamic segment starts.

(6) FLXAnFRSIR.MBSI

Message Buffer Status Interrupt Flag

Writing 0 has no effect on the bit value.

This bit is cleared when writing a 1 to it.

This flag is set by the CC when the message buffer status FLXAnFRMBS register has changed and if bit MBI of that message buffer is 1 (see **Table 18.107**).

(7) FLXAnFRSIR.SUCS

Startup Completed Successfully Flag

Writing 0 has no effect on the bit value.

This bit is cleared when writing a 1 to it.

This flag is set whenever a startup completed successfully and the CC entered NORMAL_ACTIVE state.

(8) FLXAnFRSIR.SWE

Stop Watch Event Flag

Writing 0 has no effect on the bit value.

This bit is cleared when writing a 1 to it.

This flag is set after a stop watch activation when the actual cycle counter and macrotick value are stored in the Stop Watch register (see **Section 18.2.5.4, FLXAnFRSTPW1 — FlexRay Stop Watch Register 1**).

(9) FLXAnFRSIR.TOBC

Transfer Output Buffer Completed Flag

Writing 0 has no effect on the bit value.

This bit is cleared when writing a 1 to it.

This flag is set whenever a transfer from the Message RAM to the Output Buffer has completed and bit FLXAnFROBCR.OBSYS has been reset by the Message Handler.

(10) FLXAnFRSIR.TIBC

Transfer Input Buffer Completed Flag

Writing 0 has no effect on the bit value.

This bit is cleared when writing a 1 to it.

This flag is set whenever a transfer from Input Buffer to the Message RAM has completed and bit FLXAnFRIBCR.IBSYS has been reset by the Message Handler.

(11) FLXAnFRSIR.TI1

Timer 1 Interrupt Flag

Writing 0 has no effect on the bit value.

This bit is cleared when writing a 1 to it.

This flag is set whenever timer 1 matches the conditions configured in register FLXAnFRT1C.

FlexRay timer 1 interrupt is generated when bit FLXAnFROC.T1IE is effective.

(12) FLXAnFRSIR.TI0

Timer 0 Interrupt Flag

Writing 0 has no effect on the bit value.

This bit is cleared when writing a 1 to it.

This flag is set whenever timer 0 matches the conditions configured in register FLXAnFRT0C.

FlexRay timer 0 interrupt is generated when bit FLXAnFROC.T0IE is effective.

(13) FLXAnFRSIR.NMVC

Network Management Vector Changed Flag

Writing 0 has no effect on the bit value.

This bit is cleared when writing a 1 to it.

This is set when a change in the Network Management Vector occurs.

(14) FLXAnFRSIR.RFCL

Receive FIFO Critical Level Flag

Writing 0 has no effect on the bit value.

This bit is cleared when writing a 1 to it.

This flag is set when the receive FIFO fill level indicated by bits FLXAnFRFSR.RFFL[7:0] is equal or greater than the critical level as configured by bit FLXAnFRFCL.CL.

(15) FLXAnFRSIR.RFNE

Receive FIFO Not Empty Flag

Writing 0 has no effect on the bit value.

This bit is cleared when writing a 1 to it.

This flag is set by the CC when a received valid frame was stored into the empty receive FIFO. The actual state of the receive FIFO is monitored in register FLXAnFRFSR.

(16) FLXAnFRSIR.RXI

Receive Interrupt Flag

Writing 0 has no effect on the bit value.

This bit is cleared when writing a 1 to it.

This flag is set by the CC whenever the set condition of a message buffers ND flag is fulfilled (see **Section 18.2.9.6, FLXAnFRNDATm — FlexRay New Data Register m (m = 1 to 4)**, and if bit MBI of that message buffer is set to 1 (see **Table 18.107**)

(17) FLXAnFRSIR.TXI

Transmit Interrupt Flag

Writing 0 has no effect on the bit value.

This bit is cleared when writing a 1 to it.

This flag is set by the CC at the end of frame transmission if bit MBI in the respective message buffer is set to 1 (see **Table 18.107**).

(18) FLXAnFRSIR.CYCS

Cycle Start Interrupt Flag

Writing 0 has no effect on the bit value.

This bit is cleared when writing a 1 to it.

This flag is set by the CC when a communication cycle starts.

(19) FLXAnFRSIR.CAS

Collision Avoidance Symbol Flag

Writing 0 has no effect on the bit value.

This bit is cleared when writing a 1 to it.

This flag is set by the CC during STARTUP state when a CAS or a potential CAS was received.

(20) FLXAnFRSIR.WST

Wakeup Status Flag

Writing 0 has no effect on the bit value.

This bit is cleared when writing a 1 to it.

This flag is set when flags FLXAnFRCCSV.WSV[2:0] change to a value other than UNDEFINED.

18.2.4.3 FLXAnFREILS — FlexRay Error Interrupt Line Select Register

This register assigns an interrupt generated by a specific error interrupt flag from register FLXAnFREIR to one of the two modules interrupt lines (FlexRay 0 interrupt, FlexRay 1 interrupt).

Access: This register can be read/written in 8-, 16-, or 32-bit units.

Address: <FLXn_base> + 0028_H

Value after reset: $0000\ 0000_H$

Bit	31	30	29	28	27	26	25	24	23	22	21	20	19	18	17	16
	—	—	—	—	—	TABBL	LTVBL	EDBL	—	—	—	—	—	TABAL	LTVAL	EDAL
Value after reset	0	0	0	0	0	0	0	0	0	0	0	0	0	0	0	0
R/W	R	R	R	R	R	R/W	R/W	R/W	R	R	R	R	R	R/W	R/W	R/W

Bit	15	14	13	12	11	10	9	8	7	6	5	4	3	2	1	0
	—	—	—	—	MHFL	IOBAL	IIBAL	EFAL	RFOL	AERRL	CCLL	CCFL	SFOL	SFBML	CNAL	PEMCL
Value after reset	0	0	0	0	0	0	0	0	0	0	0	0	0	0	0	0
R/W	R	R	R	R	R/W	R/W	R/W	R/W	R/W	R/W	R/W	R/W	R/W	R/W	R/W	R/W

Table 18.15 FLXAnFREILS Register Contents (1/2)

Bit Position	Bit Name	Function
31 to 27	Reserved	When read, the value after reset is read. When writing, write the value after reset.
26	TABBL	Transmission Across Boundary Channel B Interrupt Line Bit 0: Interrupt assigned to FlexRay 0 interrupt 1: Interrupt assigned to FlexRay 1 interrupt
25	LTVBL	Latest Transmit Violation Channel B Interrupt Line Bit 0: Interrupt assigned to FlexRay 0 interrupt 1: Interrupt assigned to FlexRay 1 interrupt
24	EDBL	Error Detected on Channel B Interrupt Line Bit 0: Interrupt assigned to FlexRay 0 interrupt 1: Interrupt assigned to FlexRay 1 interrupt
23 to 19	Reserved	When read, the value after reset is read. When writing, write the value after reset.
18	TABAL	Transmission Across Boundary Channel A Interrupt Line Bit 0: Interrupt assigned to FlexRay 0 interrupt 1: Interrupt assigned to FlexRay 1 interrupt
17	LTVAL	Latest Transmit Violation Channel A Interrupt Line Bit 0: Interrupt assigned to FlexRay 0 interrupt 1: Interrupt assigned to FlexRay 1 interrupt
16	EDAL	Error Detected on Channel A Interrupt Line Bit 0: Interrupt assigned to FlexRay 0 interrupt 1: Interrupt assigned to FlexRay 1 interrupt
15 to 12	Reserved	When read, the value after reset is read. When writing, write the value after reset.
11	MHFL	Message Handler Constraints Flag Interrupt Line Bit 0: Interrupt assigned to FlexRay 0 interrupt 1: Interrupt assigned to FlexRay 1 interrupt
10	IOBAL	Illegal Output Buffer Access Interrupt Line Bit 0: Interrupt assigned to FlexRay 0 interrupt 1: Interrupt assigned to FlexRay 1 interrupt
9	IIBAL	Illegal Input Buffer Access Interrupt Line Bit 0: Interrupt assigned to FlexRay 0 interrupt 1: Interrupt assigned to FlexRay 1 interrupt

Table 18.15 FLXAnFREILS Register Contents (2/2)

Bit Position	Bit Name	Function
8	EFAL	Empty FIFO Access Interrupt Line Bit 0: Interrupt assigned to FlexRay 0 interrupt 1: Interrupt assigned to FlexRay 1 interrupt
7	RFOL	Receive FIFO Overrun Interrupt Line Bit 0: Interrupt assigned to FlexRay 0 interrupt 1: Interrupt assigned to FlexRay 1 interrupt
6	AERRL	Access Error Interrupt Output Select Bit 0: Interrupt assigned to FlexRay 0 interrupt 1: Interrupt assigned to FlexRay 1 interrupt
5	CCLL	CHI Command Locked Interrupt Line Bit 0: Interrupt assigned to FlexRay 0 interrupt 1: Interrupt assigned to FlexRay 1 interrupt
4	CCFL	Clock Correction Failure Interrupt Line Bit 0: Interrupt assigned to FlexRay 0 interrupt 1: Interrupt assigned to FlexRay 1 interrupt
3	SFOL	Sync Frame Overflow Interrupt Line Bit 0: Interrupt assigned to FlexRay 0 interrupt 1: Interrupt assigned to FlexRay 1 interrupt
2	SFBML	Sync Frames Below Minimum Interrupt Line Bit 0: Interrupt assigned to FlexRay 0interrupt 1: Interrupt assigned to FlexRay 1 interrupt
1	CNAL	Command Not Accepted Interrupt Line Bit 0: Interrupt assigned to FlexRay 0 interrupt 1: Interrupt assigned to FlexRay 1 interrupt
0	PEMCL	POC Error Mode Changed Interrupt Line Bit 0: Interrupt assigned to FlexRay 0 interrupt 1: Interrupt assigned to FlexRay 1 interrupt

18.2.4.4 FLXAnFRSILS — FlexRay Status Interrupt Line Select Register

This register assigns an interrupt generated by a specific status interrupt flag from register FLXAnFRSIR to one of the two module interrupt lines (FlexRay 0 interrupt, FlexRay 1 interrupt).

Access: This register can be read/written in 8-, 16-, or 32-bit units.

Address: <FLXn_base> + $002C_H$

Value after reset: $0303\ FFFF_H$

Bit	31	30	29	28	27	26	25	24	23	22	21	20	19	18	17	16
	—	—	—	—	—	—	MTSBL	WUPBL	—	—	—	—	—	—	MTSAL	WUPAL
Value after reset	0	0	0	0	0	0	1	1	0	0	0	0	0	0	1	1
R/W	R	R	R	R	R	R	R/W	R/W	R	R	R	R	R	R	R/W	R/W

Bit	15	14	13	12	11	10	9	8	7	6	5	4	3	2	1	0
	SDSL	MBSIL	SUCSL	SWEL	TOBCL	TIBCL	TI1L	TI0L	NMVCL	RFCLL	RFNEL	RXIL	TXIL	CYCSL	CASL	WSTL
Value after reset	1	1	1	1	1	1	1	1	1	1	1	1	1	1	1	1
R/W	R/W	R/W	R/W	R/W	R/W	R/W	R/W	R/W	R/W	R/W	R/W	R/W	R/W	R/W	R/W	R/W

Table 18.16 FLXAnFRSILS Register Contents (1/2)

Bit Position	Bit Name	Function
31 to 26	Reserved	When read, the value after reset is read. When writing, write the value after reset.
25	MTSBL	Media Access Test Symbol Channel B Interrupt Line Bit 0: Interrupt assigned to FlexRay 0 interrupt 1: Interrupt assigned to FlexRay 1 interrupt
24	WUPBL	Wakeup Pattern Channel B Interrupt Line Bit 0: Interrupt assigned to FlexRay 0 interrupt 1: Interrupt assigned to FlexRay 1 interrupt
23 to 18	Reserved	When read, the value after reset is read. When writing, write the value after reset.
17	MTSAL	Media Access Test Symbol Channel A Interrupt Line Bit 0: Interrupt assigned to FlexRay 0 interrupt 1: Interrupt assigned to FlexRay 1 interrupt
16	WUPAL	Wakeup Pattern Channel A Interrupt Line Bit 0: Interrupt assigned to FlexRay 0 interrupt 1: Interrupt assigned to FlexRay 1 interrupt
15	SDSL	Start of Dynamic Segment Interrupt Line Bit 0: Interrupt assigned to FlexRay 0 interrupt 1: Interrupt assigned to FlexRay 1 interrupt
14	MBSIL	Message Buffer Status Interrupt Line Bit 0: Interrupt assigned to FlexRay 0 interrupt 1: Interrupt assigned to FlexRay 1 interrupt
13	SUCSL	Startup Completed Successfully Interrupt Line Bit 0: Interrupt assigned to FlexRay 0 interrupt 1: Interrupt assigned to FlexRay 1 interrupt
12	SWEL	Stop Watch Event Interrupt Line Bit 0: Interrupt assigned to FlexRay 0 interrupt 1: Interrupt assigned to FlexRay 1 interrupt
11	TOBCL	Transfer Output Buffer Completed Interrupt Line Bit 0: Interrupt assigned to FlexRay 0 interrupt 1: Interrupt assigned to FlexRay 1 interrupt

Table 18.16 FLXAnFRSILS Register Contents (2/2)

Bit Position	Bit Name	Function
10	TIBCL	Transfer Input Buffer Completed Interrupt Line Bit 0: Interrupt assigned to FlexRay 0 interrupt 1: Interrupt assigned to FlexRay 1 interrupt
9	TI1L	Timer 1 Interrupt Line Bit 0: Interrupt assigned to FlexRay 0 interrupt 1: Interrupt assigned to FlexRay 1 interrupt
8	TI0L	Timer 0 Interrupt Line Bit 0: Interrupt assigned to FlexRay 0 interrupt 1: Interrupt assigned to FlexRay 1 interrupt
7	NMVCL	Network Management Vector Changed Interrupt Line Bit 0: Interrupt assigned to FlexRay 0 interrupt 1: Interrupt assigned to FlexRay 1 interrupt
6	RFCLL	Receive FIFO Critical Level Interrupt Line Bit 0: Interrupt assigned to FlexRay 0 interrupt 1: Interrupt assigned to FlexRay 1 interrupt
5	RFNEL	Receive FIFO Not Empty Interrupt Line Bit 0: Interrupt assigned to FlexRay 0 interrupt 1: Interrupt assigned to FlexRay 1 interrupt
4	RXIL	Receive Interrupt Line Bit 0: Interrupt assigned to FlexRay 0 interrupt 1: Interrupt assigned to FlexRay 1 interrupt
3	TXIL	Transmit Interrupt Line Bit 0: Interrupt assigned to FlexRay 0 interrupt 1: Interrupt assigned to FlexRay 1 interrupt
2	CYCSL	Cycle Start Interrupt Line Bit 0: Interrupt assigned to FlexRay 0 interrupt 1: Interrupt assigned to FlexRay 1 interrupt
1	CASL	Collision Avoidance Symbol Interrupt Line Bit 0: Interrupt assigned to FlexRay 0 interrupt 1: Interrupt assigned to FlexRay 1 interrupt
0	WSTL	Wakeup Status Interrupt Line Bit 0: Interrupt assigned to FlexRay 0 interrupt 1: Interrupt assigned to FlexRay 1 interrupt

18.2.4.5 FLXAnFREIES — FlexRay Error Interrupt Enable Set Register

The settings in the FlexRay Error Interrupt Enable Set (FLXAnFREIES) and FlexRay Error Interrupt Enable Reset (FLXAnFREIER) register determine which status changes in the FlexRay Error Interrupt Register will result in an interrupt.

The enable bits are set by writing to FLXAnFREIES and reset by writing to FLXAnFREIER. Reading from both addresses will result in the same value.

Writing 0 has no effect on the bit value.

Writing a 1 sets the interrupt enable bit.

Access: This register can be read/written in 8-, 16-, or 32-bit units.

Address: <FLXn_base> + 0030_H

Value after reset: $0000\ 0000_H$

Bit	31	30	29	28	27	26	25	24	23	22	21	20	19	18	17	16
	—	—	—	—	—	TABBE	LTVBE	EDBE	—	—	—	—	—	TABAE	LTVAE	EDAE
Value after reset	0	0	0	0	0	0	0	0	0	0	0	0	0	0	0	0
R/W	R	R	R	R	R	R/W	R/W	R/W	R	R	R	R	R	R/W	R/W	R/W

Bit	15	14	13	12	11	10	9	8	7	6	5	4	3	2	1	0
	—	—	—	—	MHFE	IOBAE	IIBAE	EFAE	RFOE	AERRE	CCLE	CCFE	SFOE	SFBME	CNAE	PEMCE
Value after reset	0	0	0	0	0	0	0	0	0	0	0	0	0	0	0	0
R/W	R	R	R	R	R/W	R/W	R/W	R/W	R/W	R/W	R/W	R/W	R/W	R/W	R/W	R/W

Table 18.17 FLXAnFREIES Register Contents (1/2)

Bit Position	Bit Name	Function
31 to 27	Reserved	When read, the value after reset is read. When writing, write the value after reset.
26	TABBE	Transmission Across Boundary Channel B Interrupt Enable Bit 0: Interrupt disabled 1: Interrupt enabled
25	LTVBE	Latest Transmit Violation Channel B Interrupt Enable Bit 0: Interrupt disabled 1: Interrupt enabled
24	EDBE	Error Detected on Channel B Interrupt Enable Bit 0: Interrupt disabled 1: Interrupt enabled
23 to 19	Reserved	When read, the value after reset is read. When writing, write the value after reset.
18	TABAE	Transmission Across Boundary Violation Channel A Interrupt Enable Bit 0: Interrupt disabled 1: Interrupt enabled
17	LTVAE	Latest Transmit Violation Channel A Interrupt Enable Bit 0: Interrupt disabled 1: Interrupt enabled
16	EDAE	Error Detected on Channel A Interrupt Enable Bit 0: Interrupt disabled 1: Interrupt enabled
15 to 12	Reserved	When read, the value after reset is read. When writing, write the value after reset.

Table 18.17 FLXAnFREIES Register Contents (2/2)

Bit Position	Bit Name	Function
11	MHFE	Message Handler Constraints Flag Interrupt Enable Bit 0: Interrupt disabled 1: Interrupt enabled
10	IOBAE	Illegal Output Buffer Access Interrupt Enable Bit 0: Interrupt disabled 1: Interrupt enabled
9	IIBAE	Illegal Input Buffer Access Interrupt Enable Bit 0: Interrupt disabled 1: Interrupt enabled
8	EFAE	Empty FIFO Access Interrupt Enable3 Bit 0: Interrupt disabled 1: Interrupt enabled
7	RFOE	Receive FIFO Overrun Interrupt Enable Bit 0: Interrupt disabled 1: Interrupt enabled
6	AERRE	Access Error Interrupt Enable Bit 0: Interrupt is disabled. 1: Interrupt is enabled.
5	CCLE	CHI Command Locked Interrupt Enable Bit 0: Interrupt disabled 1: Interrupt enabled
4	CCFE	Clock Correction Failure Interrupt Enable Bit 0: Interrupt disabled 1: Interrupt enabled
3	SFOE	Sync Frame Overflow Interrupt Enable Bit 0: Interrupt disabled 1: Interrupt enabled
2	SFBME	Sync Frames Below Minimum Interrupt Enable Bit 0: Interrupt disabled 1: Interrupt enabled
1	CNAE	Command Not Accepted Interrupt Enable Bit 0: Interrupt disabled 1: Interrupt enabled
0	PEMCE	POC Error Mode Changed Interrupt Enable Bit 0: Interrupt disabled 1: Interrupt enabled

18.2.4.6 FLXAnFREIER — FlexRay Error Interrupt Enable Reset Register

The settings in the FlexRay Error Interrupt Enable Set (FLXAnFREIES) and FlexRay Error Interrupt Enable Reset (FLXAnFREIER) register determine which status changes in the FlexRay Error Interrupt Register will result in an interrupt.

The enable bits are set by writing to FLXAnFREIES and reset by writing to FLXAnFREIER. Reading from both addresses will result in the same value.

Writing 0 has no effect on the bit value.

Writing a 1 clears the interrupt enable bit.

Access: This register can be read/written in 8-, 16-, or 32-bit units.

Address: <FLXn_base> + 0034_H

Value after reset: $0000\ 0000_H$

Bit	31	30	29	28	27	26	25	24	23	22	21	20	19	18	17	16
	—	—	—	—	—	TABBD	LTVBD	EDBD	—	—	—	—	—	TABAD	LTVAD	EDAD
Value after reset	0	0	0	0	0	0	0	0	0	0	0	0	0	0	0	0
R/W	R	R	R	R	R	R/W	R/W	R/W	R	R	R	R	R	R/W	R/W	R/W

Bit	15	14	13	12	11	10	9	8	7	6	5	4	3	2	1	0
	—	—	—	—	MHFD	IOBAD	IIBAD	EFAD	RFOD	AERRD	CCLD	CCFD	SFOD	SFBMD	CNAD	PEMCD
Value after reset	0	0	0	0	0	0	0	0	0	0	0	0	0	0	0	0
R/W	R	R	R	R	R/W	R/W	R/W	R/W	R/W	R/W	R/W	R/W	R/W	R/W	R/W	R/W

Table 18.18 FLXAnFREIER Register Contents (1/2)

Bit Position	Bit Name	Function
31 to 27	Reserved	When read, the value after reset is read. When writing, write the value after reset.
26	TABBD	Transmission Across Boundary Channel B Interrupt Disable Bit 0: Interrupt disabled 1: Interrupt enabled
25	LTVBD	Latest Transmit Violation Channel B Interrupt Disable Bit 0: Interrupt disabled 1: Interrupt enabled
24	EDBD	Error Detected on Channel B Interrupt Disable Bit 0: Interrupt disabled 1: Interrupt enabled
23 to 19	Reserved	When read, the value after reset is read. When writing, write the value after reset.
18	TABAD	Transmission Across Boundary Violation Channel A Interrupt Disable Bit 0: Interrupt disabled 1: Interrupt enabled
17	LTVAD	Latest Transmit Violation Channel A Interrupt Disable Bit 0: Interrupt disabled 1: Interrupt enabled
16	EDAD	Error Detected on Channel A Interrupt Disable Bit 0: Interrupt disabled 1: Interrupt enabled
15 to 12	Reserved	When read, the value after reset is read. When writing, write the value after reset.

Table 18.18 FLXAnFREIER Register Contents (2/2)

Bit Position	Bit Name	Function
11	MHFD	Message Handler Constraints Flag Interrupt Disable Bit 0: Interrupt disabled 1: Interrupt enabled
10	IOBAD	Illegal Output Buffer Access Interrupt Disable Bit 0: Interrupt disabled 1: Interrupt enabled
9	IIBAD	Illegal Input Buffer Access Interrupt Disable Bit 0: Interrupt disabled 1: Interrupt enabled
8	EFAD	Empty FIFO Access Interrupt Disable Bit 0: Interrupt disabled 1: Interrupt enabled
7	RFOD	Receive FIFO Overrun Interrupt Disable Bit 0: Interrupt disabled 1: Interrupt enabled
6	AERRD	Access error interrupt disable Bit 0: Interrupt is disabled. 1: Interrupt is enabled.
5	CCLD	CHI Command Locked Interrupt Disable Bit 0: Interrupt disabled 1: Interrupt enabled
4	CCFD	Clock Correction Failure Interrupt Disable Bit 0: Interrupt disabled 1: Interrupt enabled
3	SFOD	Sync Frame Overflow Interrupt Disable Bit 0: Interrupt disabled 1: Interrupt enabled
2	SFBMD	Sync Frames Below Minimum Interrupt Disable Bit 0: Interrupt disabled 1: Interrupt enabled
1	CNAD	Command Not Accepted Interrupt Disable Bit 0: Interrupt disabled 1: Interrupt enabled
0	PEMCD	POC Error Mode Changed Interrupt Disable Bit 0: Interrupt disabled 1: Interrupt enabled

18.2.4.7 FLXAnFRSIES — FlexRay Status Interrupt Enable Set Register

The settings in the FlexRay Status Interrupt Enable Set (FLXAnFRSIES) and FlexRay Status Interrupt Enable Reset (FLXAnFRSIER) register determine which status changes in the FlexRay Status Interrupt Register will result in an interrupt.

The enable bits are set by writing to FLXAnFRSIES and reset by writing to FLXAnFRSIER. Reading from both addresses will result in the same value.

Writing 0 has no effect on the bit value.

Writing a 1 sets the interrupt enable bit.

Access: This register can be read/written in 8-, 16-, or 32-bit units.

Address: <FLXn_base> + 0038_H

Value after reset: $0000\ 0000_H$

Bit	31	30	29	28	27	26	25	24	23	22	21	20	19	18	17	16
	—	—	—	—	—	—	MTSBE	WUPBE	—	—	—	—	—	—	MTSAE	WUPAE
Value after reset	0	0	0	0	0	0	0	0	0	0	0	0	0	0	0	0
R/W	R	R	R	R	R	R	R/W	R/W	R	R	R	R	R	R	R/W	R/W

Bit	15	14	13	12	11	10	9	8	7	6	5	4	3	2	1	0
	SDSE	MBSIE	SUCSE	SWEE	TOBCE	TIBCE	TI1E	TI0E	NMVCE	RFCLE	RFNEE	RXIE	TXIE	CYCSE	CASE	WSTE
Value after reset	0	0	0	0	0	0	0	0	0	0	0	0	0	0	0	0
R/W	R/W	R/W	R/W	R/W	R/W	R/W	R/W	R/W	R/W	R/W	R/W	R/W	R/W	R/W	R/W	R/W

Table 18.19 FLXAnFRSIES Register Contents (1/2)

Bit Position	Bit Name	Function
31 to 26	Reserved	When read, the value after reset is read. When writing, write the value after reset.
25	MTSBE	MTS Received on Channel B Interrupt Enable Bit 0: Interrupt disabled 1: Interrupt enabled
24	WUPBE	Wakeup Pattern Channel B Interrupt Enable Bit 0: Interrupt disabled 1: Interrupt enabled
23 to 18	Reserved	When read, the value after reset is read. When writing, write the value after reset.
17	MTSAE	MTS Received on Channel A Interrupt Enable Bit 0: Interrupt disabled 1: Interrupt enabled
16	WUPAE	Wakeup Pattern Channel A Interrupt Enable Bit 0: Interrupt disabled 1: Interrupt enabled
15	SDSE	Start of Dynamic Segment Interrupt Enable Bit 0: Interrupt disabled 1: Interrupt enabled
14	MBSIE	Message Buffer Status Interrupt Enable Bit 0: Interrupt disabled 1: Interrupt enabled
13	SUCSE	Startup Completed Successfully Interrupt Enable Bit 0: Interrupt disabled 1: Interrupt enabled

Table 18.19 FLXAnFRSIES Register Contents (2/2)

Bit Position	Bit Name	Function
12	SWEE	Stop Watch Event Interrupt Enable Bit 0: Interrupt disabled 1: Interrupt enabled
11	TOBCE	Transfer Output Buffer Completed Interrupt Enable Bit 0: Interrupt disabled 1: Interrupt enabled
10	TIBCE	Transfer Input Buffer Completed Interrupt Enable Bit 0: Interrupt disabled 1: Interrupt enabled
9	TI1E	Timer 1 Interrupt Enable Bit 0: Interrupt disabled 1: Interrupt enabled
8	TI0E	Timer 0 Interrupt Enable Bit 0: Interrupt disabled 1: Interrupt enabled
7	NMVCE	Network Management Vector Changed Interrupt Enable Bit 0: Interrupt disabled 1: Interrupt enabled
6	RFCLE	Receive FIFO Critical Level Interrupt Enable Bit 0: Interrupt disabled 1: Interrupt enabled
5	RFNEE	Receive FIFO Not Empty Interrupt Enable Bit 0: Interrupt disabled 1: Interrupt enabled
4	RXIE	Receive Interrupt Enable Bit 0: Interrupt disabled 1: Interrupt enabled
3	TXIE	Transmit Interrupt Enable Bit 0: Interrupt disabled 1: Interrupt enabled
2	CYCSE	Cycle Start Interrupt Enable Bit 0: Interrupt disabled 1: Interrupt enabled
1	CASE	Collision Avoidance Symbol Interrupt Enable Bit 0: Interrupt disabled 1: Interrupt enabled
0	WSTE	Wakeup Status Interrupt Enable Bit 0: Interrupt disabled 1: Interrupt enabled

18.2.4.8 FLXAnFRSIER — FlexRay Status Interrupt Enable Reset Register

The settings in the FlexRay Status Interrupt Enable Set (FLXAnFRSIES) and FlexRay Status Interrupt Enable Reset (FLXAnFRSIER) register determine which status changes in the FlexRay Status Interrupt Register will result in an interrupt.

The enable bits are set by writing to FLXAnFRSIES and reset by writing to FLXAnFRSIER. Reading from both addresses will result in the same value.

Writing 0 has no effect on the bit value.

Writing a 1 clears the interrupt enable bit.

Access: This register can be read/written in 8-, 16-, or 32-bit units.

Address: <FLXn_base> + $003C_H$

Value after reset: $0000\ 0000_H$

Bit	31	30	29	28	27	26	25	24	23	22	21	20	19	18	17	16
	—	—	—	—	—	—	MTSBD	WUPBD	—	—	—	—	—	—	MTSAD	WUPAD
Value after reset	0	0	0	0	0	0	0	0	0	0	0	0	0	0	0	0
R/W	R	R	R	R	R	R	R/W	R/W	R	R	R	R	R	R	R/W	R/W

Bit	15	14	13	12	11	10	9	8	7	6	5	4	3	2	1	0
	SDSD	MBSID	SUCSD	SWED	TOBCD	TIBCD	TI1D	TI0D	NMVCD	RFCLD	RFNED	RXID	TXID	CYCSD	CASD	WSTD
Value after reset	0	0	0	0	0	0	0	0	0	0	0	0	0	0	0	0
R/W	R/W	R/W	R/W	R/W	R/W	R/W	R/W	R/W	R/W	R/W	R/W	R/W	R/W	R/W	R/W	R/W

Table 18.20 FLXAnFRSIER Register Contents (1/2)

Bit Position	Bit Name	Function
31 to 26	Reserved	When read, the value after reset is read. When writing, write the value after reset.
25	MTSBD	MTS Received on Channel B Interrupt Disable Bit 0: Interrupt disabled 1: Interrupt enabled
24	WUPBD	Wakeup Pattern Channel B Interrupt Disable Bit 0: Interrupt disabled 1: Interrupt enabled
23 to 18	Reserved	When read, the value after reset is read. When writing, write the value after reset.
17	MTSAD	MTS Received on Channel A Interrupt Disable Bit 0: Interrupt disabled 1: Interrupt enabled
16	WUPAD	Wakeup Pattern Channel A Interrupt Disable Bit 0: Interrupt disabled 1: Interrupt enabled
15	SDSD	Start of Dynamic Segment Interrupt Disable Bit 0: Interrupt disabled 1: Interrupt enabled
14	MBSID	Message Buffer Status Interrupt Disable Bit 0: Interrupt disabled 1: Interrupt enabled
13	SUCSD	Startup Completed Successfully Interrupt Disable Bit 0: Interrupt disabled 1: Interrupt enabled

Table 18.20 FLXAnFRSIER Register Contents (2/2)

Bit Position	Bit Name	Function
12	SWED	Stop Watch Event Interrupt Disable Bit 0: Interrupt disabled 1: Interrupt enabled
11	TOBCD	Transfer Output Buffer Completed Interrupt Disable Bit 0: Interrupt disabled 1: Interrupt enabled
10	TIBCD	Transfer Input Buffer Completed Interrupt Disable Bit 0: Interrupt disabled 1: Interrupt enabled
9	TI1D	Timer Interrupt 1 Disable Bit 0: Interrupt disabled 1: Interrupt enabled
8	TI0D	Timer Interrupt 0 Disable Bit 0: Interrupt disabled 1: Interrupt enabled
7	NMVCD	Network Management Vector Changed Interrupt Disable Bit 0: Interrupt disabled 1: Interrupt enabled
6	RFCLD	Receive FIFO Critical Level Interrupt Disable Bit 0: Interrupt disabled 1: Interrupt enabled
5	RFNED	Receive FIFO Not Empty Interrupt Disable Bit 0: Interrupt disabled 1: Interrupt enabled
4	RXID	Receive Interrupt Disable Bit 0: Interrupt disabled 1: Interrupt enabled
3	TXID	Transmit Interrupt Disable Bit 0: Interrupt disabled 1: Interrupt enabled
2	CYCSD	Cycle Start Interrupt Disable Bit 0: Interrupt disabled 1: Interrupt enabled
1	CASD	Collision Avoidance Symbol Interrupt Disable Bit 0: Interrupt disabled 1: Interrupt enabled
0	WSTD	Wakeup Status Interrupt Disable Bit 0: Interrupt disabled 1: Interrupt enabled

18.2.4.9 FLXAnFRILE — FlexRay Interrupt Line Enable Register

Each of the two module interrupt lines (FlexRay 0 interrupt, FlexRay 1 interrupt) can be enabled / disabled separately by programming bit FLXAnFRILE.EINT0 and FLXAnFRILE.EINT1.

Access: This register can be read/written in 8-, 16-, or 32-bit units.

Address: <FLXn_base> + 0040_H

Value after reset: $0000\ 0000_H$

Bit	31	30	29	28	27	26	25	24	23	22	21	20	19	18	17	16
	—	—	—	—	—	—	—	—	—	—	—	—	—	—	—	—
Value after reset	0	0	0	0	0	0	0	0	0	0	0	0	0	0	0	0
R/W	R	R	R	R	R	R	R	R	R	R	R	R	R	R	R	R

Bit	15	14	13	12	11	10	9	8	7	6	5	4	3	2	1	0
	—	—	—	—	—	—	—	—	—	—	—	—	—	—	EINT1	EINT0
Value after reset	0	0	0	0	0	0	0	0	0	0	0	0	0	0	0	0
R/W	R	R	R	R	R	R	R	R	R	R	R	R	R	R	R/W	R/W

Table 18.21 FLXAnFRILE Register Contents

Bit Position	Bit Name	Function
31 to 2	Reserved	When read, the value after reset is read. When writing, write the value after reset.
1	EINT1	Enable FlexRay 1 Interrupt Line Bit 0: FlexRay 1 interrupt disabled 1: FlexRay 1 interrupt enabled
0	EINT0	Enable FlexRay 0 Interrupt Line Bit 0: FlexRay 0 interrupt disabled 1: FlexRay 0 interrupt enabled

18.2.5 FlexRay Timer Registers

18.2.5.1 FLXAnFRT0C — FlexRay Timer 0 Configuration Register

This register is an absolute timer. It specifies the point in time when a FlexRay timer 0 interrupt occurs as the values of cycle count and macrotick (MT). When the FlexRay timer 0 passes, bits FLXAnFRSIR.TI0 and FLXAnFROS.T0IS are set to 1. A timer 0 interrupt then occurs while bit FLXAnFROC.T0IE is effective.

CAUTION

The configuration of timer 0 is compared against the macrotick counter value, there is no separate counter for timer 0.

Access: This register can be read/written in 8-, 16-, or 32-bit units.

Address: <FLXn_base> + 0044_H

Value after reset: $0000\ 0000_H$

Bit	31	30	29	28	27	26	25	24	23	22	21	20	19	18	17	16
	—	—	T0MO[13:0]													
Value after reset	0	0	0	0	0	0	0	0	0	0	0	0	0	0	0	0
R/W	R	R	R/W	R/W	R/W	R/W	R/W	R/W	R/W	R/W	R/W	R/W	R/W	R/W	R/W	R/W

Bit	15	14	13	12	11	10	9	8	7	6	5	4	3	2	1	0
	—	T0CC[6:0]							—	—	—	—	—	—	T0MS	T0RC
Value after reset	0	0	0	0	0	0	0	0	0	0	0	0	0	0	0	0
R/W	R	R/W	R/W	R/W	R/W	R/W	R/W	R/W	R	R	R	R	R	R	R/W	R/W

Table 18.22 FLXAnFRT0C Register Contents

Bit Position	Bit Name	Function
31, 30	Reserved	When read, the value after reset is read. When writing, write the value after reset.
29 to 16	T0MO[13:0]	Timer 0 Macrotick Offset Bit Timer 0 Macrotick Offset
15	Reserved	When read, the value after reset is read. When writing, write the value after reset.
14 to 8	T0CC[6:0]	Timer 0 Cycle Code Bit Timer 0 Cycle Code
7 to 2	Reserved	When read, the value after reset is read. When writing, write the value after reset.
1	T0MS	Timer 0 Mode Select Bit 0: Single-shot mode 1: Continuous mode
0	T0RC	Timer 0 Run Control Bit 0: Timer 0 halted 1: Timer 0 running

(1) FLXAnFRT0C.T0MO

Timer 0 Macrotick Offset Bit

Before reconfiguration of the timer, the timer has to be halted first by writing bit FLXAnFRT0C.T0RC to 0.

Configures the macrotick offset from the beginning of the communication cycle where the interrupt is to occur. The FlexRay timer 0 interrupt occurs at this offset for each cycle of the cycle set.

(2) FLXAnFRT0C.T0CC

Timer 0 Cycle Code Bit

Before reconfiguration of the timer, the timer has to be halted first by writing bit FLXAnFRT0C.T0RC to 0.

The 7-bit timer 0 cycle code determines the cycle set used for generation of the FlexRay timer 0 interrupt. For details about the configuration of the cycle code see **Section 18.3.8.2, Cycle Counter Filtering**.

(3) FLXAnFRT0C.T0MS

Timer 0 Mode Select Bit

Before reconfiguration of the timer, the timer has to be halted first by writing bit FLXAnFRT0C.T0RC to 0.

Configures the timer run mode. In Single-shot mode the timer is deactivated when the timer configuration matches the configured cycle counter and macrotick value.

(4) FLXAnFRT0C.T0RC

Timer 0 Run Control Bit

Timer 0 can be activated (set bit FLXAnFRT0C.T0RC to 1) when the POC is either in NORMAL_ACTIVE state or in NORMAL_PASSIVE state.

Timer 0 is deactivated when leaving NORMAL_ACTIVE state or NORMAL_PASSIVE state except for transitions between the two states.

18.2.5.2 FLXAnFRT1C — FlexRay Timer 1 Configuration Register

This register is a relative timer. After the specified number of macroticks (MT) has expired, a FlexRay timer 1 interrupt is asserted. When the FlexRay timer 1 passes, bits FLXAnFRSIR.TI1 and FLXAnFROS.T1IS are set to 1. A timer 1 interrupt then occurs while bit FLXAnFROC.T1IE is effective.

Access: This register can be read/written in 8-, 16-, or 32-bit units.

Address: <FLXn_base> + 0048_H

Value after reset: $0002\ 0000_H$

Bit	31	30	29	28	27	26	25	24	23	22	21	20	19	18	17	16
	—	—	T1MC[13:0]													
Value after reset	0	0	0	0	0	0	0	0	0	0	0	0	0	0	1	0
R/W	R	R	R/W	R/W	R/W	R/W	R/W	R/W	R/W	R/W	R/W	R/W	R/W	R/W	R/W	R/W

Bit	15	14	13	12	11	10	9	8	7	6	5	4	3	2	1	0
	—	—	—	—	—	—	—	—	—	—	—	—	—	—	T1MS	T1RC
Value after reset	0	0	0	0	0	0	0	0	0	0	0	0	0	0	0	0
R/W	R	R	R	R	R	R	R	R	R	R	R	R	R	R	R/W	R/W

Table 18.23 FLXAnFRT1C Register Contents

Bit Position	Bit Name	Function
31, 30	Reserved	When read, the value after reset is read. When writing, write the value after reset.
29 to 16	T1MC[13:0]	Specify timer 1 macrotick count value.
15 to 2	Reserved	When read, the value after reset is read. When writing, write the value after reset.
1	T1MS	Timer 1 Mode Select Bit 0: Single-shot mode 1: Continuous mode
0	T1RC	Timer 1 Run Control Bit 0: Timer 1 halted 1: Timer 1 running

(1) FLXAnFRT1C.T1MC

Timer 1 Macrotick Count Bit

Before reconfiguration of the timer, the timer has to be halted first by writing bit FLXAnFRT1C.T1RC to 0.

Valid values are 2 to 16383 MT in continuous mode

Valid values are 1 to 16383 MT in single-shot mode

When the configured macrotick count is reached the FlexRay timer 1 interrupt is generated.

(2) FLXAnFRT1C.T1MS

Timer 1 Mode Select Bit

Before reconfiguration of the timer, the timer has to be halted first by writing bit FLXAnFRT1C.T1RC to 0.

Configures the timer run mode. In Single-shot mode the timer is deactivated when the timer configuration matches the configured cycle counter and macrotick value.

(3) FLXAnFRT1C.T1RC

Timer 1 Run Control Bit

Timer 1 can be activated (set bit FLXAnFRT1C.T1RC to 1) as long as the POC is either in NORMAL_ACTIVE state or in NORMAL_PASSIVE state.

Timer 1 is deactivated when leaving NORMAL_ACTIVE state or NORMAL_PASSIVE state except for transitions between the two states.

18.2.5.3 FLXAnFRT2C — FlexRay Timer 2 Configuration Register

This register is an absolute timer. Timer 2 has the same absolute timer features as timer 0.

Access: This register can be read/written in 8-, 16-, or 32-bit units.

Address: <FLXn_base> + 0844_H

Value after reset: $0000\ 0000_H$

Bit	31	30	29	28	27	26	25	24	23	22	21	20	19	18	17	16
	—	—	T2MO[13:0]													
Value after reset	0	0	0	0	0	0	0	0	0	0	0	0	0	0	0	0
R/W	R	R	R/W	R/W	R/W	R/W	R/W	R/W	R/W	R/W	R/W	R/W	R/W	R/W	R/W	R/W

Bit	15	14	13	12	11	10	9	8	7	6	5	4	3	2	1	0
	—	T2CC[6:0]							—	—	—	—	—	—	T2MS	T2RC
Value after reset	0	0	0	0	0	0	0	0	0	0	0	0	0	0	0	0
R/W	R	R/W	R/W	R/W	R/W	R/W	R/W	R/W	R	R	R	R	R	R	R/W	R/W

Table 18.24 FLXAnFRT2C Register Contents

Bit Position	Bit Name	Function
31, 30	Reserved	When read, the value after reset is read. When writing, write the value after reset.
29 to 16	T2MO[13:0]	Timer 2 Macrotick Offset Bit Timer 2 Macrotick Offset
15	Reserved	When read, the value after reset is read. When writing, write the value after reset.
14 to 8	T2CC[6:0]	Timer 2 Cycle Code Bit Timer 2 Cycle Code
7 to 2	Reserved	When read, the value after reset is read. When writing, write the value after reset.
1	T2MS	Timer 2 Mode Select Bit 0: Single-shot mode 1: Continuous mode
0	T2RC	Timer 2 Run Control Bit 0: Timer halted 1: Timer running

(1) FLXAnFRT2C.T2MO

Timer 2 Macrotick Offset Bit

Stop the timer by writing 0 to the FLXAnFRT2C.T2RC bit before changing the setting of the timer.

The T2MO bits are used to set the timing for generation of the timer 2 interrupt as an offset value in MT units from the position where the transfer cycle starts. That is, the timer 2 interrupt is generated at the offset position specified by the setting for the number of MT cycles.

(2) FLXAnFRT2C.T2CC

Timer 2 Cycle Code Bit

Stop the timer by writing 0 to bit FLXAnFRT2C.T2RC before changing the setting of the timer.

The T2CC bits are used to make the cycle setting for generation of the timer 2 interrupt as a 7-bit timer 2 cycle code. For details, see **Section 18.3.8.2, Cycle Counter Filtering**.

(3) FLXAnFRT2C.T2MS

Timer 2 Mode Select Bit

Stop the timer by writing 0 to bit FLXAnFRT2C.T2RC before changing the setting of the timer.

Set the execution mode of the timer. In single shot mode, the timer stops when the timer setting matched with the MT value of the cycle counter.

(4) FLXAnFRT2C.T2RC

Timer 2 Run Control Bit

The timer 2 can operate only when POC is in NORMAL_ACTIVE state or NORMAL_PASSIVE state (bit FLXAnFRT2C.T2RC is set to 1).

The timer 2 stops when it transits to other state except transition between NORMAL_ACTIVE state and NORMAL_PASSIVE state.

18.2.5.4 FLXAnFRSTPW1 — FlexRay Stop Watch Register 1

The stop watch is activated by the following trigger events.

- Input of a rising edge or falling edge to the FLX0STPWT pin
- FlexRay 0 interrupt or FlexRay 1 interrupt
- Writing bit FLXAnFRSTPW1.SSWT to 1

With the macrotick counter increment following next to the stop watch activation the actual cycle counter and macrotick values are captured in register FLXAnFRSTPW1 while the slot counter values for channel A and B are captured in register FLXAnFRSTPW2.

Access: This register can be read/written in 8-, 16-, or 32-bit units.

Address: <FLXn_base> + $004C_H$

Value after reset: $0000\ 0000_H$

Bit	31	30	29	28	27	26	25	24	23	22	21	20	19	18	17	16
	—	—	SMTV[13:0]													
Value after reset	0	0	0	0	0	0	0	0	0	0	0	0	0	0	0	0
R/W	R	R	R	R	R	R	R	R	R	R	R	R	R	R	R	R

Bit	15	14	13	12	11	10	9	8	7	6	5	4	3	2	1	0
	—	—	SCCV[5:0]						—	EINT1	EINT0	EETP	SSWT	EDGE	SWMS	ESWT
Value after reset	0	0	0	0	0	0	0	0	0	0	0	0	0	0	0	0
R/W	R	R	R	R	R	R	R	R	R	R/W	R/W	R/W	R/W	R/W	R/W	R/W

Table 18.25 FLXAnFRSTPW1 Register Contents (1/2)

Bit Position	Bit Name	Function
31, 30	Reserved	When read, the value after reset is read. When writing, write the value after reset.
29 to 16	SMTV[13:0]	Stop Watch Event Occurrence Macrotick Value
15, 14	Reserved	When read, the value after reset is read. When writing, write the value after reset.
13 to 8	SCCV[5:0]	Stop Watch Event Occurrence Cycle Counter Value
7	Reserved	When read, the value after reset is read. When writing, write the value after reset.
6	EINT1	FlexRay Interrupt 1 Trigger Enable 0: Stop watch trigger by FlexRay 1 interrupt disabled 1: FlexRay 1 interrupt event triggers stop watch
5	EINT0	FlexRay 0 Interrupt Trigger Enable 0: Stop watch trigger by FlexRay 0 interrupt disabled 1: FlexRay interrupt 0 event triggers stop watch
4	EETP	External Trigger Pin Enable 0: Trigger by the FLX0STPWT pin is disabled. 1: Trigger by the FLX0STPWT pin is enabled.
3	SSWT	Software Stop Watch Trigger 0: Software trigger reset 1: Stop watch activated by software trigger
2	EDGE	Stop Watch Trigger Edge Select 0: Falling edge 1: Rising edge

Table 18.25 FLXAnFRSTPW1 Register Contents (2/2)

Bit Position	Bit Name	Function
1	SWMS	Stop Watch Mode Select 0: Single-shot mode 1: Continuous mode
0	ESWT	Hardware Stop Watch Trigger Enable 0: Stop watch trigger disabled 1: Stop watch trigger enabled

(1) FLXAnFRSTPW1.SMTV

Stop Watch Captured Macrotick Value

State of the macrotick counter when the stop watch event occurred.

(2) FLXAnFRSTPW1.SCCV

Stop Watch Captured Cycle Counter Value

State of the cycle counter when the stop watch event occurred.

(3) FLXAnFRSTPW1.EINT1

Enable FlexRay 1 Interrupt Trigger Bit

Enables stop watch trigger by FlexRay 1 interrupt when bit FLXAnFRSTPW1.ESWT is 1.

(4) FLXAnFRSTPW1.EINT0

Enable FlexRay 0 Interrupt Trigger Bit

Enables stop watch trigger by FlexRay 0 interrupt when bit FLXAnFRSTPW1.ESWT = 1.

(5) FLXAnFRSTPW1.EETP

External Trigger Pin Enable Bit

When bit FLXAnFRSTPW1.ESWT is set to 1, the FLX0STPWT pin event is treated as a stop watch trigger.

(6) FLXAnFRSTPW1.SSWT

Software Stop Watch Trigger Bit

Bits FLXAnFRSTPW1.ESWT and FLXAnFRSTPW1.SSWT cannot be set to 1 simultaneously. In this case the write access to the register is ignored, and both bits keep their previous values. Either the external stop watch trigger or the software stop watch trigger may be used.

Writing 1 in this bit activates the stop watch. This bit is reset to 0 after the cycle count and slot count, and macrotick (MT) value are stored in the FlexRay stop watch register.

(7) FLXAnFRSTPW1.EDGE

Stop Watch Trigger Edge Select Bit

(8) FLXAnFRSTPW1.SWMS

Stop Watch Mode Select Bit

(9) FLXAnFRSTPW1.ESWT

Enable Stop Watch Trigger Bit

Bits FLXAnFRSTPW1.ESWT and FLXAnFRSTPW1.SSWT cannot be set to 1 simultaneously. In this case the write access to the register is ignored, and both bits keep their previous values. Either the external stop watch trigger or the software stop watch trigger may be used.

If enabled, any of an external trigger pin input event, a FlexRay 0 interrupt event, or a FlexRay 1 interrupt event activates the stop watch.

In single-shot mode, this bit is reset to 0 after the cycle count and slot count, and macrotick (MT) value are stored in the FlexRay stop watch register.

18.2.5.5 FLXAnFRSTPW2 — FlexRay Stop Watch Register 2

Access: This register can only be read in 8-, 16-, or 32-bit units.

Address: <FLXn_base> + 0050_H

Value after reset: $0000\ 0000_H$

Bit	31	30	29	28	27	26	25	24	23	22	21	20	19	18	17	16
	—	—	—	—	—	SSCVB[10:0]										
Value after reset	0	0	0	0	0	0	0	0	0	0	0	0	0	0	0	0
R/W	R	R	R	R	R	R	R	R	R	R	R	R	R	R	R	R

Bit	15	14	13	12	11	10	9	8	7	6	5	4	3	2	1	0
	—	—	—	—	—	SSCVA[10:0]										
Value after reset	0	0	0	0	0	0	0	0	0	0	0	0	0	0	0	0
R/W	R	R	R	R	R	R	R	R	R	R	R	R	R	R	R	R

Table 18.26 FLXAnFRSTPW2 Register Contents

Bit Position	Bit Name	Function
31 to 27	Reserved	When read, the value after reset is read.
26 to 16	SSCVB[10:0]	Stop Watch Captured Slot Counter Value Channel B
15 to 11	Reserved	When read, the value after reset is read.
10 to 8	SSCVA[10:0]	Stop Watch Captured Slot Counter Value Channel A

(1) FLXAnFRSTPW2.SSCVB

Stop Watch Captured Slot Counter Value Channel B

State of the slot counter for channel B when the stop watch event occurred.

(2) FLXAnFRSTPW2.SSCVA

Stop Watch Captured Slot Counter Value Channel A

State of the slot counter for channel A when the stop watch event occurred.

18.2.6 CC Control Registers

This section describes the registers provided by the CC (Communication Controller) to allow the Host to control the operation of the CC. The FlexRay protocol specification requires the Host to write application configuration data in CONFIG state only. Please consider that the configuration registers are not locked for writing in DEFAULT_CONFIG state.

The configuration data is reset when DEFAULT_CONFIG state is entered from reset. To change POC state from DEFAULT_CONFIG to CONFIG state the Host has to apply CHI command CONFIG. If the Host wants the CC to leave CONFIG state, the Host has to execute the lock release sequence as described in **Section 18.2.3.1, FLXAnFRLCK — FlexRay Lock Register**.

18.2.6.1 FLXAnFRSUCC1 — FlexRay SUC Configuration Register 1

Access: This register can be read/written in 8-, 16-, or 32-bit units.

Address: <FLXn_base> + 0080_H

Value after reset: $0C40\ 1080_H$

Bit	31	30	29	28	27	26	25	24	23	22	21	20	19	18	17	16
	—	—	—	—	CCHB	CCHA	MTSB	MTSA	HCSE	TSM	WUCS	PTA[4:0]				
Value after reset	0	0	0	0	1	1	0	0	0	1	0	0	0	0	0	0
R/W	R	R	R	R	R/W	R/W	R/W	R/W	R/W	R/W	R/W	R/W	R/W	R/W	R/W	R/W

Bit	15	14	13	12	11	10	9	8	7	6	5	4	3	2	1	0
	CSA[4:0]					—	TXSY	TXST	PBSY	—	—	—	CMD[3:0]			
Value after reset	0	0	0	1	0	0	0	0	1	0	0	0	0	0	0	0
R/W	R/W	R/W	R/W	R/W	R/W	R	R/W	R/W	R	R	R	R	R/W	R/W	R/W	R/W

Table 18.27 FLXAnFRSUCC1 Register Contents (1/2)

Bit Position	Bit Name	Function
31 to 28	Reserved	When read, the value after reset is read. When writing, write the value after reset.
27	CCHB	Connected to Channel B Bit Configures pChannels 0: Not connected to channel B 1: Node connected to channel B (default after reset)
26	CCHA	Connected to Channel A Bit Configures pChannels 0: Not connected to channel A 1: Node connected to channel A (default after reset)
25	MTSB	Select Channel B for MTS Transmission Bit 0: Channel B disabled for MTS transmission 1: Channel B selected for MTS transmission
24	MTSA	Select Channel A for MTS Transmission Bit 0: Channel A disabled for MTS transmission 1: Channel A selected for MTS transmission
23	HCSE	Halt due to Clock Sync Error Bit Configures pAllowHaltDueToClock 0: CC will enter / remain in NORMAL_PASSIVE 1: CC will enter HALT state
22	TSM	Transmission Slot Mode Bit Configures pSingleSlotEnabled 0: ALL Slot Mode 1: SINGLE Slot Mode (value after reset)

Table 18.27 FLXAnFRSUCC1 Register Contents (2/2)

Bit Position	Bit Name	Function
21	WUCS	Wakeup Channel Select Bit Configures pWakeupChannel 0: Send wakeup pattern on channel A 1: Send wakeup pattern on channel B
20 to 16	PTA[4:0]	Passive to Active Bit Configures pAllowPassiveToActive
15 to 11	CSA[4:0]	Cold Start Attempts Bit Configures gColdStartAttempts
10	Reserved	When read, the value after reset is read. When writing, write the value after reset.
9	TXSY	Transmit Sync Frame in Key Slot Bit Configures pKeySlotUsedForSync 0: No sync frame transmission in key slot, node is neither sync nor coldstart node 1: Key slot used to transmit sync frame, node is sync node
8	TXST	Transmit Startup Frame in Key Slot Bit Configures pKeySlotUsedForStartup 0: No startup frame transmission in key slot, node is non-coldstarter 1: Key slot used to transmit startup frame, node is leading or following coldstarter
7	PBSY	POC Busy Flag 0: POC not busy, bit FLXAnFRSUCC1.CMD writeable 1: POC is busy, bit FLXAnFRSUCC1.CMD locked
6 to 4	Reserved	When read, the value after reset is read. When writing, write the value after reset.
3 to 0	CMD[3:0]	CHI Command Vector Bit 0000: command_not_accepted 0001: CONFIG 0010: READY 0011: WAKEUP 0100: RUN 0101: ALL_SLOTS 0110: HALT 0111: FREEZE 1000: SEND_MTS 1001: ALLOW_COLDSTART 1010: RESET_STATUS_INDICATORS 1011: MONITOR_MODE 1100: CLEAR_RAMS others: reserved

(1) FLXAnFRSUCC1.CCHB

Connected to Channel B Bit

The user can only write to these bits when bits FLXAnFRCCSV.POCS[5:0] are DEFAULT_CONFIG or CONFIG.

Configures whether the node is connected to channel B (pChannels).

(2) FLXAnFRSUCC1.CCHA

Connected to Channel A Bit

The user can only write to these bits when bits FLXAnFRCCSV.POCS[5:0] are DEFAULT_CONFIG or CONFIG.

Configures whether the node is connected to channel A (pChannels).

(3) FLXAnFRSUCC1.MTSB

Select Channel B for MTS Transmission Bit

The user can only write to these bits when bits FLXAnFRCCSV.POCS[5:0] are DEFAULT_CONFIG or CONFIG.

The FLXAnFRSUCC1.MTSB bit may also be changed outside DEFAULT_CONFIG or CONFIG state when the write to FLXAnFRSUCC1 register is directly preceded by the unlock sequence for the Configuration Lock Key as described in **Section 18.2.3.1, FLXAnFRLCK — FlexRay Lock Register**. This may be combined with CHI command SEND_MTS. If both bits FLXAnFRSUCC1.MTSA and FLXAnFRSUCC1.MTSB are set to 1 an MTS symbol will be transmitted on both channels when requested by writing 1000_B to the FLXAnFRSUCC1.CMD[3:0] bits.

The bit selects channel B for MTS symbol transmission.

(4) FLXAnFRSUCC1.MTSA

Select Channel A for MTS Transmission Bit

The user can only write to these bits when FLXAnFRCCSV.POCS[5:0] bits are DEFAULT_CONFIG or CONFIG.

Bit FLXAnFRSUCC1.MTSA may also be changed outside DEFAULT_CONFIG or CONFIG state when the write to FLXAnFRSUCC1 register is directly preceded by the unlock sequence for the Configuration Lock Key as described in **Section 18.2.3.1, FLXAnFRLCK — FlexRay Lock Register**. This may be combined with CHI command SEND_MTS. If both bits FLXAnFRSUCC1.MTSA and FLXAnFRSUCC1.MTSB are set to 1 an MTS symbol will be transmitted on both channels when requested by writing 1000_B to the FLXAnFRSUCC1.CMD[3:0] bits.

The bit selects channel A for MTS symbol transmission.

(5) FLXAnFRSUCC1.HCSE

Halt due to Clock Sync Error Bit

The user can only write to these bits when bits FLXAnFRCCSV.POCS[5:0] are DEFAULT_CONFIG or CONFIG.

Controls the transition to HALT state due to a clock synchronization error (pAllowHaltDueToClock).

(6) FLXAnFRSUCC1.TSM

Transmission Slot Mode Bit

The user can only write to these bits when bits FLXAnFRCCSV.POCS[5:0] is DEFAULT_CONFIG or CONFIG.

Selects the value after transmission slot mode reset (pSingleSlotEnabled).

In SINGLE slot mode the CC may only transmit in the preconfigured key slot. The key slot ID is configured in the header section of message buffer 0 respectively message buffers 0 and 1 depending on bit FLXAnFRMRC.SPLM.

In case FLXAnFRSUCC1.TSM = 1, message buffer 0 respectively message buffers 0,1 can be (re)configured in DEFAULT_CONFIG or CONFIG state only. In ALL slot mode the CC may transmit in all slots.

FLXAnFRSUCC1.TSM is a configuration bit which can only be set / reset by the Host.

The CC changes to ALL slot mode when the Host successfully applied the ALL_SLOTS command by writing 0101 to bits FLXAnFRSUCC1.CMD[3:0] in POC states NORMAL_ACTIVE or NORMAL_PASSIVE. The actual slot mode is monitored by bits FLXAnFRCCSV.SLM[1:0].

(7) FLXAnFRSUCC1.WUCS

Wakeup Channel Select Bit

The user can only write to these bits when bits FLXAnFRCCSV.POCS[5:0] are DEFAULT_CONFIG or CONFIG.

With this bit the Host selects the channel on which the CC sends the Wakeup pattern (pWakeupChannel).

(8) FLXAnFRSUCC1.PTA

Passive to Active Bit

The user can only write to these bits when the FLXAnFRCCSV.POCS[5:0] bits is DEFAULT_CONFIG or CONFIG.

Valid values are 0 to 31 even / odd cycle pairs.

Defines the number of consecutive even / odd cycle pairs that must have valid clock correction terms before the CC is allowed to transit from NORMAL_PASSIVE to NORMAL_ACTIVE state (pAllowPassiveToActive).

If set to “00000_B” the CC is not allowed to transit from NORMAL_PASSIVE to NORMAL_ACTIVE state.

(9) FLXAnFRSUCC1.CSA

Cold Start Attempts Bit

The user can only write to these bits when the FLXAnFRCCSV.POCS[5:0] bits is DEFAULT_CONFIG or CONFIG.

Must be identical in all nodes of a cluster.

Valid values are 2 to 31.

Configures the maximum number of attempts that a cold starting node is permitted to try to start up the network without receiving any valid response from another node (gColdStartAttempts).

(10) FLXAnFRSUCC1.TXSY

Transmit Sync Frame in Key Slot Bit

The user can only write to these bits when the FLXAnFRCCSV.POCS[5:0] bits is DEFAULT_CONFIG or CONFIG.

Defines whether the key slot is used to transmit sync frames (pKeySlotUsedForSync).

CAUTION

The protocol requires that both bits FLXAnFRSUCC1.TXST and FLXAnFRSUCC1.TXSY are set for coldstart nodes.

(11) FLXAnFRSUCC1.TXST

Transmit Startup Frame in Key Slot Bit

The user can only write to these bits when bits FLXAnFRCCSV.POCS[5:0] are DEFAULT_CONFIG or CONFIG.

Defines whether the key slot is used to transmit startup frames (pKeySlotUsedForStartup).

CAUTION

The protocol requires that both bits FLXAnFRSUCC1.TXST and FLXAnFRSUCC1.TXSY are set for coldstart nodes.

(12) FLXAnFRSUCC1.PBSY

POC Busy Flag

Signals that the POC is busy and cannot accept a command from the Host. Bits FLXAnFRSUCC1.CMD[5:0] are locked against write accesses.

Set to 1 after reset during initialization of internal RAM blocks.

(13) FLXAnFRSUCC1.CMD

CHI Command Vector Bit

The Host may write any CHI command at any time, but certain commands are enabled only in certain POC states. If a command is not enabled, it will not be executed, the CHI command vector FLXAnFRSUCC1.CMD[3:0] bits will be reset to 0000_B = command_not_accepted, and flag FLXAnFREIR.CNA will be set to 1.

In general the Host must check FLXAnFRSUCC1.PBSY before writing a new CHI command.

In case the previous CHI command has not yet completed, flag FLXAnFREIR.CCL is set to 1 together with FLXAnFREIR.CNA; the CHI command needs to be repeated.

Except for HALT state, a POC state change command applied while the CC is already in the requested POC state neither causes a state change nor will flag FLXAnFREIR.CNA be set.

Reading bits FLXAnFRSUCC1.CMD[3:0] show whether the last CHI command was accepted. The actual POC state is monitored by bits FLXAnFRCCSV.POCS[5:0].

- command_not_accepted

  Bits FLXAnFRSUCC1.CMD[3:0] are reset to 0000_B due to one of the following conditions:

  – Illegal command applied by the Host
  – Host applied command to leave CONFIG state without preceding config lock key
  – Host applied new command while execution of the previous Host command has not completed
  – Host writes command_not_accepted

When bits FLXAnFRSUCC1.CMD[3:0] are reset to 0000_B, FLXAnFREIR.CNA is set to 1, and if enabled an interrupt is generated. Commands which are not accepted are not executed.

CONFIG command

Go to POC state CONFIG when called in POC states DEFAULT_CONFIG, or READY. When called in HALT state the CC transits to POC state DEFAULT_CONFIG. When called in any other state, bits FLXAnFRSUCC1.CMD[3:0] will be reset to 0000_B = command_not_accepted.

READY command

Go to POC state READY when called in POC states CONFIG, NORMAL_ACTIVE, NORMAL_PASSIVE, STARTUP, or WAKEUP. When called in any other state, bits FLXAnFRSUCC1.CMD[3:0] will be reset to "0000_B" = command_not_accepted.

WAKEUP command

Go to POC state WAKEUP when called in POC state READY. When called in any other state, bits FLXAnFRSUCC1.CMD[3:0] will be reset to "0000_B" = command_not_accepted.

RUN command

Go to POC state STARTUP when called in POC state READY. When called in any other state, bits FLXAnFRSUCC1.CMD[3:0] will be reset to "0000_B" = command_not_accepted.

ALL_SLOTS command

Leave SINGLE slot mode and go to ALL-SLOTS mode after successful startup / integration at the next end of cycle when called in POC states NORMAL_ACTIVE or NORMAL_PASSIVE. When called in any other state, bits FLXAnFRSUCC1.CMD[3:0] will be reset to "0000_B" = command_not_accepted.

HALT command

Set halt request FLXAnFRCCSV.HRQ to 1 and go to POC state HALT at the next end of cycle when called in POC states NORMAL_ACTIVE or NORMAL_PASSIVE. When called in any other state, bits FLXAnFRSUCC1.CMD[3:0] will be reset to "0000_B" = command_not_accepted.

FREEZE command

Set the freeze status indicator FLXAnFRCCSV.FSI flag to 1 and go to POC state HALT immediately. Can be called from any state.

SEND_MTS command

Send single MTS symbol during the next following symbol window on the channel configured by the FLXAnFRSUCC1.MTSA and FLXAnFRSUCC1.MTSB bits, when called in POC state NORMAL_ACTIVE after CC entered ALL slot mode (the FLXAnFRCCSV.SLM[1:0] bits = "11"). When called in any other state, or when called while a previously requested MTS has not yet been transmitted, bits FLXAnFRSUCC1.CMD[3:0] will be reset to "0000_B" = command_not_accepted.

ALLOW_COLDSTART command

The command resets the FLXAnFRCCSV.CSI flag to enable the node to become leading coldstarter. When called in states DEFAULT_CONFIG, CONFIG, or HALT, bits FLXAnFRSUCC1.CMD[3:0] will be reset to "0000_B" = command_not_accepted. To become leading coldstarter it is also required that both FLXAnFRSUCC1.TXST and FLXAnFRSUCC1.TXSY bits are set.

RESET_STATUS_INDICATORS command

Resets status flags FLXAnFRCCSV.FSI, FLXAnFRCCSV.HRQ, FLXAnFRCCSV.CSNI, and FLXAnFRCCSV.CSAI to the values after reset. May be called in POC states READY and STARTUP. When called in any other state, bits FLXAnFRSUCC1.CMD[3:0] will be reset to "0000_B" = command_not_accepted.

CLEAR_RAMS command

Sets bit FLXAnFRMHDS.CRAM to 1 when called in DEFAULT_CONFIG or CONFIG state. When called in any other state, bits FLXAnFRSUCC1.CMD[3:0] will be reset to "0000_B" = command_not_accepted.

Bit FLXAnFRMHDS.CRAM is also set to 1 when the CC leaves reset. By setting bit FLXAnFRMHDS.CRAM all internal RAM blocks are initialized to zero. During the initialization of the RAMs, bit RSUCC1.PBSY will show POC busy. Access to the configuration and status registers is possible during execution of CHI command CLEAR_RAMS.

The initialization of the internal message RAM requires 2048 bus clock cycles. There should be no Host access to IBF or OBF during initialization of the internal RAM blocks after reset or after assertion of CHI command CLEAR_RAMS.

Before asserting CHI command CLEAR_RAMS, the Host should make sure that no transfer between Message RAM and IBF / OBF or the TBFRAMs is ongoing and that the data transfer handler has no effect (bits FLXAnFRITS.ITS and FLXAnFROTS.OTS are 0). This command also resets the Message Buffer Status registers FLXAnFRMHDS, FLXAnFRLDTS, FLXAnFRFSR, FLXAnFRMHDF, FLXAnFRTXRQ1 to FLXAnFRTXRQ4, FLXAnFRNDAT1 to FLXAnFRNDAT14, and FLXAnFRMBSC1 to FLXAnFRMBSC4.

CAUTIONS

1. **All accepted commands with exception of CLEAR_RAMS and SEND_MTS will cause a change of the POC state in the FlexRay domain after at most 8 cycles of the slower of the two clocks "bus clock" and "FlexRay", assumed that POC was not busy when the command was applied and that no POC state change was forced by bus activity in that time frame. Reading register FLXAnFRCCSV will show data that is additionally delayed by synchronization from the FlexRay domain to the bus clock domain. The maximum additional delay is 12 cycles of the slower of the two clocks 'bus clock' and "FlexRay".**
2. **When transfer is stopped by a FREEZE or READY command and then restarted as a leading ColdStart node, the startup frame may not be transmitted in cycle 0. This depends on the internal state of the FlexRay module. Such cases arise when the startup frame is set in a slot 1 to slot 7. This does not occur in a ColdStart after a hardware reset. Even if the above situation arises, the ColdStart will succeed on the second trial. Repetition prolongs the overall ColdStart process, but the ColdStart will not be obstructed by the earlier situation. To avoid this effect, allocate startup and sync frames to static slot 8 or a slot with a higher number.**

Table 18.28 below references the CHI commands from the *FlexRay Protocol Specification* (*Section 2.1.1.1, Table 2.2*) to the FlexRay CHI command vector FLXAnFRSUCC1.CMD[3:0] bits.

Table 18.28 Reference to CHI Host Command Summary from FlexRay Protocol Specification

CHI command	Where processed (POC States)	CHI Command Vector CMD
ALL_SLOTS	POC: normal active, POC: normal passive	ALL_SLOTS
ALLOW_COLDSTART	All except POC: default config, POC: config, POC: halt	ALLOW_COLDSTART
CONFIG	POC: default config, POC: ready	CONFIG

Table 18.28 Reference to CHI Host Command Summary from FlexRay Protocol Specification

CHI command	Where processed (POC States)	CHI Command Vector CMD
CONFIG_COMPLETE	POC: config	Unlock sequence & READY
DEFAULT_CONFIG	POC: halt	CONFIG
FREEZE	All	FREEZE
HALT	POC: normal active, POC: normal passive	HALT
READY	All except POC: default config, POC: config, POC: ready, POC: halt	READY
RUN	POC: ready	RUN
WAKEUP	POC: ready	WAKEUP

18.2.6.2 FLXAnFRSUCC2 — FlexRay SUC Configuration Register 2

Access: This register can be read/written in 8-, 16-, or 32-bit units.

Address: <FLXn_base> + 0084_H

Value after reset: $0100\ 0504_H$

Bit	31	30	29	28	27	26	25	24	23	22	21	20	19	18	17	16
	—	—	—	—	LTN[3:0]				—	—	—	LT[20:16]				
Value after reset	0	0	0	0	0	0	0	1	0	0	0	0	0	0	0	0
R/W	R	R	R	R	R/W	R/W	R/W	R/W	R	R	R	R/W	R/W	R/W	R/W	R/W

Bit	15	14	13	12	11	10	9	8	7	6	5	4	3	2	1	0
	LT[15:0]															
Value after reset	0	0	0	0	0	1	0	1	0	0	0	0	0	1	0	0
R/W	R/W	R/W	R/W	R/W	R/W	R/W	R/W	R/W	R/W	R/W	R/W	R/W	R/W	R/W	R/W	R/W

Table 18.29 FLXAnFRSUCC2 Register Contents

Bit Position	Bit Name	Function
31 to 28	Reserved	When read, the value after reset is read. When writing, write the value after reset.
27 to 24	LTN[3:0]	Listen Timeout Noise Bit Configures (gListenNoise - 1)
23 to 21	Reserved	When read, the value after reset is read. When writing, write the value after reset.
20 to 0	LT[20:0]	Listen Timeout Bit Configures pdListenTimeout

(1) FLXAnFRSUCC2.LTN

Listen Timeout Noise Bit

The user can only write to these bits when bits FLXAnFRCCSV.POCS[5:0] are DEFAULT_CONFIG or CONFIG.

The range for gListenNoise is 2 to 16.

FLXAnFRSUCC2.LTN must be configured identical in all nodes of a cluster.

Configures the upper limit for startup and wakeup listen timeout in the presence of noise expressed as a multiple of pdListenTimeout.

CAUTION

The wakeup / startup noise timeout is calculated as follows:
pdListenTimeout × gListenNoise = FLXAnFRSUCC2.LT × (FLXAnFRSUCC2.LTN + 1)

(2) FLXAnFRSUCC2.LT

Listen Timeout Bit

The user can only write to these bits when bits FLXAnFRCCSV.POCS[5:0] are DEFAULT_CONFIG or CONFIG.

The range for pdListenTimeout is 1284 to 1283846 µT.

Configures wakeup / startup listen time out in µT.

18.2.6.3 FLXAnFRSUCC3 — FlexRay SUC Configuration Register 3

Access: This register can be read/written in 8-, 16-, or 32-bit units.

Address: <FLXn_base> + 0088_H

Value after reset: $0000\ 0011_H$

Bit	31	30	29	28	27	26	25	24	23	22	21	20	19	18	17	16
	—	—	—	—	—	—	—	—	—	—	—	—	—	—	—	—
Value after reset	0	0	0	0	0	0	0	0	0	0	0	0	0	0	0	0
R/W	R	R	R	R	R	R	R	R	R	R	R	R	R	R	R	R

Bit	15	14	13	12	11	10	9	8	7	6	5	4	3	2	1	0
	—	—	—	—	—	—	—	—	WCF[3:0]				WCP[3:0]			
Value after reset	0	0	0	0	0	0	0	0	0	0	0	1	0	0	0	1
R/W	R	R	R	R	R	R	R	R	R/W	R/W	R/W	R/W	R/W	R/W	R/W	R/W

Table 18.30 FLXAnFRSUCC3 Register Contents

Bit Position	Bit Name	Function
31 to 8	Reserved	When read, the value after reset is read. When writing, write the value after reset.
7 to 4	WCF[3:0]	Maximum Without Clock Correction Fatal Bit (transition to HALT state) Configures gMaxWithoutClockCorrectionFatal
3 to 0	WCP[3:0]	Maximum Without Clock Correction Passive Bit (transition to NORMAL_PASSIVE state) Configures gMaxWithoutClockCorrectionPassive

(1) FLXAnFRSUCC3.WCF

Maximum Without Clock Correction Fatal Bit (transition to HALT state)

The user can only write to these bits when bits FLXAnFRCCSV.POCS[5:0] are DEFAULT_CONFIG or CONFIG.

Valid values are 1 to 15 cycle pairs.

Must be identical in all nodes of a cluster.

Defines the number of consecutive even / odd cycle pairs with missing clock correction terms that will cause a transition from NORMAL_ACTIVE or NORMAL_PASSIVE to HALT state.

CAUTION

The transition to HALT state is prevented if the FLXAnFRSUCC1.HCSE bit is not set.

(2) FLXAnFRSUCC3.WCP

Maximum Without Clock Correction Passive Bit (transition to NORMAL_PASSIVE state)

The user can only write to these bits when bits FLXAnFRCCSV.POCS[5:0] are DEFAULT_CONFIG or CONFIG.

Valid values are 1 to 15 cycle pairs.

Must be identical in all nodes of a cluster.

Defines the number of consecutive even / odd cycle pairs with missing clock correction terms that will cause a transition from NORMAL_ACTIVE to NORMAL_PASSIVE state.

18.2.6.4 FLXAnFRNEMC — FlexRay NEM Configuration Register

Access: This register can be read/written in 8-, 16-, or 32-bit units.

Address: <FLXn_base> + $008C_H$

Value after reset: $0000\ 0000_H$

Bit	31	30	29	28	27	26	25	24	23	22	21	20	19	18	17	16
	—	—	—	—	—	—	—	—	—	—	—	—	—	—	—	—
Value after reset	0	0	0	0	0	0	0	0	0	0	0	0	0	0	0	0
R/W	R	R	R	R	R	R	R	R	R	R	R	R	R	R	R	R

Bit	15	14	13	12	11	10	9	8	7	6	5	4	3	2	1	0
	—	—	—	—	—	—	—	—	—	—	—	—	NML[3:0]			
Value after reset	0	0	0	0	0	0	0	0	0	0	0	0	0	0	0	0
R/W	R	R	R	R	R	R	R	R	R	R	R	R	R/W	R/W	R/W	R/W

Table 18.31 FLXAnFRNEMC Register Contents

Bit Position	Bit Name	Function
31 to 4	Reserved	When read, the value after reset is read. When writing, write the value after reset.
3 to 0	NML[3:0]	Network Management Vector Length Bit Configures gNetworkManagementVectorLength

(1) FLXAnFRNEMC.NML

Network Management Vector Length Bit

The user can only write to these bits when bits FLXAnFRCCSV.POCS[5:0] are DEFAULT_CONFIG or CONFIG.

Valid values are 0 to 12 bytes.

The configured length must be identical in all nodes of a cluster.

These bits configure the length of the NM vector.

18.2.6.5 FLXAnFRPRTC1 — FlexRay PRT Configuration Register 1

Access: This register can be read/written in 8-, 16-, or 32-bit units.

Address: <FLXn_base> + 0090_H

Value after reset: $084C\ 0633_H$

Bit	31	30	29	28	27	26	25	24	23	22	21	20	19	18	17	16
	RWP[5:0]						—	RXW[8:0]								
Value after reset	0	0	0	0	1	0	0	0	0	1	0	0	1	1	0	0
R/W	R/W	R/W	R/W	R/W	R/W	R/W	R	R/W	R/W	R/W	R/W	R/W	R/W	R/W	R/W	R/W

Bit	15	14	13	12	11	10	9	8	7	6	5	4	3	2	1	0
	BRP[1:0]		SPP[1:0]		—	CASM[6:0]							TSST[3:0]			
Value after reset	0	0	0	0	0	1	1	0	0	0	1	1	0	0	1	1
R/W	R/W	R/W	R/W	R/W	R	R/W	R/W	R/W	R/W	R/W	R/W	R/W	R/W	R/W	R/W	R/W

Table 18.32 FLXAnFRPRTC1 Register Contents

Bit Position	Bit Name	Function
31 to 26	RWP[5:0]	Repetitions of Tx Wakeup Pattern Bit Configures pWakeupPattern
25	Reserved	When read, the value after reset is read. When writing, write the value after reset.
24 to 16	RXW[8:0]	Wakeup Symbol Receive Window Length Bit Configures gdWakeupSymbolRxWindow
15, 14	BRP[1:0]	Baud Rate Prescaler Bit Configures gdSampleClockPeriod and pSamplesPerMicrotick 00 = 10 Mbps 01 = 5 Mbps 10 = 2.5 Mbps 11 = 2.5 Mbps
13, 12	SPP[1:0]	Strobe Point Position Bit Configures Strobe point position 00 = Sample 5 01 = Sample 4 10 = Sample 6 11 = Sample 5
11	Reserved	When read, the value after reset is read. When writing, write the value after reset.
10 to 4	CASM[6:0]	Collision Avoidance Symbol Max Bit Configures gdCASRxLowMax
3 to 0	TSST[3:0]	Transmission Start Sequence Transmitter Bit Configures gdTSSTransmitter

(1) FLXAnFRPRTC1.RWP

Repetitions of Tx Wakeup Pattern Bit

The user can only write to these bits when bits FLXAnFRCCSV.POCS[5:0] are DEFAULT_CONFIG or CONFIG.

Valid values are 2 to 63.

Configures the number of repetitions (sequences) of the Tx wakeup symbol.

(2) FLXAnFRPRTC1.RXW

Wakeup Symbol Receive Window Length Bit

The user can only write to these bits when bits FLXAnFRCCSV.POCS[5:0] DEFAULT_CONFIG or CONFIG.

Valid values are 76 to 301 bit times.

Must be identical in all nodes of a cluster.

Configures the number of bit times used by the node to test the duration of the received wakeup pattern.

(3) FLXAnFRPRTC1.BRP

Baud Rate Prescaler Bit

The user can only write to these bits when bits FLXAnFRCCSV.POCS[5:0] are DEFAULT_CONFIG or CONFIG.

The Baud Rate Prescaler configures the baud rate on the FlexRay bus. The baud rates listed below are valid with a sample clock set to 80 MHz. One bit time always consists of 8 samples independent of the configured baud rate.

00 = 10 MBit/s

gdSampleClockPeriod = 12.5 ns = 1 * “sample clock”

pSamplesPerMicrotick = 2 (1 µT = 25 ns)

01 = 5 MBit/s

gdSampleClockPeriod = 25 ns = 2 * “sample clock”

pSamplesPerMicrotick = 1 (1 µT = 25 ns)

10, 11 = 2.5 MBit/s

gdSampleClockPeriod = 50 ns = 4 * “sample clock”

pSamplesPerMicrotick = 1 (1 µT = 50 ns)

(4) FLXAnFRPRTC1.SPP

Strobe Point Position Bit

The user can only write to these bits when bits FLXAnFRCCSV.POCS[5:0] are DEFAULT_CONFIG or CONFIG.

These bits specify the sample-counter position at which the Checker Core strobes in response to received bits.

The strobed bit value is determined by sampling at the timing specified by bits FLXAnFRPRTC1.SPP[1:0].

CAUTION

The current revision 2.1 of the FlexRay protocol requires that the FLXAnFRPRTC1.SPP[1:0] bits are 00. The alternate strobe point positions could be used to compensate for asymmetries in the physical layer.

(5) FLXAnFRPRTC1.CASM

Collision Avoidance Symbol Max Bit

The user can only write to these bits when bits FLXAnFRCCSV.POCS[5:0] are DEFAULT_CONFIG or CONFIG.

CASM6 is fixed to 1.

Valid values are 67 to 99 bit times.

Configures the upper limit of the acceptance window for a collision avoidance symbol (CAS).

(6) FLXAnFRPRTC1.TSST

Transmission Start Sequence Transmitter Bit

The user can only write to these bits when bits FLXAnFRCCSV.POCS[5:0] are is DEFAULT_CONFIG or CONFIG.

Valid values are 3 to 15 bit times.

Must be identical in all nodes of a cluster.

Configures the duration of the Transmission Start Sequence (TSS) in terms of bit times (1 bit time = 4 μT = 100ns @ 10Mbps).

18.2.6.6 FLXAnFRPRTC2 — FlexRay PRT Configuration Register 2

Access: This register can be read/written in 8-, 16-, or 32-bit units.

Address: <FLXn_base> + 0094_H

Value after reset: $0F2D\ 0A0E_H$

Bit	31	30	29	28	27	26	25	24	23	22	21	20	19	18	17	16
	—	—	TXL[5:0]						TXI[7:0]							
Value after reset	0	0	0	0	1	1	1	1	0	0	1	0	1	1	0	1
R/W	R	R	R/W	R/W	R/W	R/W	R/W	R/W	R/W	R/W	R/W	R/W	R/W	R/W	R/W	R/W

Bit	15	14	13	12	11	10	9	8	7	6	5	4	3	2	1	0
	—	—	RXL[5:0]						—	—	RXI[5:0]					
Value after reset	0	0	0	0	1	0	1	0	0	0	0	0	1	1	1	0
R/W	R	R	R/W	R/W	R/W	R/W	R/W	R/W	R	R	R/W	R/W	R/W	R/W	R/W	R/W

Table 18.33 FLXAnFRPRTC2 Register Contents

Bit Position	Bit Name	Function
31, 30	Reserved	When read, the value after reset is read. When writing, write the value after reset.
29 to 24	TXL[5:0]	Wakeup Symbol Transmit Low Bit Configures gdWakeupSymbolTxLow
23 to 16	TXI[7:0]	Wakeup Symbol Transmit Idle Bit Configures gdWakeupSymbolTxIdle
15, 14	Reserved	When read, the value after reset is read. When writing, write the value after reset.
13 to 8	RXL[5:0]	Wakeup Symbol Receive Low Bit Configures gdWakeupSymbolRxLow
7, 6	Reserved	When read, the value after reset is read. When writing, write the value after reset.
5 to 0	RXI[5:0]	Wakeup Symbol Rx Idle Bit Configures gdWakeupSymbolRxIdle

(1) FLXAnFRPRTC2.TXL

Wakeup Symbol Transmit Low Bit

The user can only write to these bits when bits FLXAnFRCCSV.POCS[5:0] are DEFAULT_CONFIG or CONFIG.

Valid values are 15 to 60 bit times.

Must be identical in all nodes of a cluster.

Configures the number of bit times used by the node to transmit the low phase of the wakeup symbol.

(2) FLXAnFRPRTC2.TXI

Wakeup Symbol Transmit Idle Bit

The user can only write to these bits when bits FLXAnFRCCSV.POCS[5:0] are DEFAULT_CONFIG or CONFIG.

Valid values are 45 to 180 bit times.

Must be identical in all nodes of a cluster.

Configures the number of bit times used by the node to transmit the idle phase of the wakeup symbol.

(3) FLXAnFRPRTC2.RXL

Wakeup Symbol Receive Low Bit

The user can only write to these bits when bits FLXAnFRCCSV.POCS[5:0] are DEFAULT_CONFIG or CONFIG.

Valid values are 10 to 55 bit times.

Must be identical in all nodes of a cluster.

Configures the number of bit times used by the node to test the duration of the low phase of the received wakeup symbol.

(4) FLXAnFRPRTC2.RXI

Wakeup Symbol Rx Idle Bit

The user can only write to these bits when bits FLXAnFRCCSV.POCS[5:0] are DEFAULT_CONFIG or CONFIG.

Valid values are 14 to 59 bit times.

Must be identical in all nodes of a cluster.

Configures the number of bit times used by the node to test the duration of the idle phase of the received wakeup symbol.

18.2.6.7 FLXAnFRMHDC — FlexRay MHD Configuration Register

Access: This register can be read/written in 8-, 16-, or 32-bit units.

Address: <FLXn_base> + 0098_H

Value after reset: $0000\ 0000_H$

Bit	31	30	29	28	27	26	25	24	23	22	21	20	19	18	17	16
	—	—	—	SLT[12:0]												
Value after reset	0	0	0	0	0	0	0	0	0	0	0	0	0	0	0	0
R/W	R	R	R	R/W	R/W	R/W	R/W	R/W	R/W	R/W	R/W	R/W	R/W	R/W	R/W	R/W

Bit	15	14	13	12	11	10	9	8	7	6	5	4	3	2	1	0
	—	—	—	—	—	—	—	—	—	SFDL[6:0]						
Value after reset	0	0	0	0	0	0	0	0	0	0	0	0	0	0	0	0
R/W	R	R	R	R	R	R	R	R	R	R/W	R/W	R/W	R/W	R/W	R/W	R/W

Table 18.34 FLXAnFRMHDC Register Contents

Bit Position	Bit Name	Function
31 to 29	Reserved	When read, the value after reset is read. When writing, write the value after reset.
28 to 16	SLT[12:0]	Start of Latest Transmit Bit Configures pLatestTx
15 to 7	Reserved	When read, the value after reset is read. When writing, write the value after reset.
6 to 0	SFDL[6:0]	Static Frame Data Length Bit Configures gPayloadLengthStatic

(1) FLXAnFRMHDC.SLT

Start of Latest Transmit Bit

The user can only write to these bits when bits FLXAnFRCCSV.POCS[5:0] are DEFAULT_CONFIG or CONFIG.

Valid values are 0 to 7981 minislots.

Configures the maximum minislot value allowed before inhibiting frame transmission in the dynamic segment of the cycle. There is no transmission in dynamic segment if FLXAnFRMHDC.SLT is set to zero.

(2) FLXAnFRMHDC.SFDL

Static Frame Data Length Bit

The user can only write to these bits when bits FLXAnFRCCSV.POCS[5:0] are DEFAULT_CONFIG or CONFIG.

Valid values are 0 to 127.

The payload length must be identical in all nodes of a cluster.

Configures the cluster-wide payload length for all frames sent in the static segment in double bytes.

18.2.6.8 FLXAnFRGTUC1 — FlexRay GTU Configuration Register 1

Access: This register can be read/written in 8-, 16-, or 32-bit units.

Address: <FLXn_base> + $00A0_H$

Value after reset: $0000\ 0280_H$

Bit	31	30	29	28	27	26	25	24	23	22	21	20	19	18	17	16
	—	—	—	—	—	—	—	—	—	—	—	—	UT[19:16]			
Value after reset	0	0	0	0	0	0	0	0	0	0	0	0	0	0	0	0
R/W	R	R	R	R	R	R	R	R	R	R	R	R	R/W	R/W	R/W	R/W

Bit	15	14	13	12	11	10	9	8	7	6	5	4	3	2	1	0
	UT[15:0]															
Value after reset	0	0	0	0	0	0	1	0	1	0	0	0	0	0	0	0
R/W	R/W	R/W	R/W	R/W	R/W	R/W	R/W	R/W	R/W	R/W	R/W	R/W	R/W	R/W	R/W	R/W

Table 18.35 FLXAnFRGTUC1 Register Contents

Bit Position	Bit Name	Function
31 to 20	Reserved	When read, the value after reset is read. When writing, write the value after reset.
19 to 0	UT[19:0]	Setting of Communication Cycle in Microticks Bit Configures pMicroPerCycle

(1) FLXAnFRGTUC1.UT

Setting of Communication Cycle in Microticks Bit

The user can only write to these bits when bits FLXAnFRCCSV.POCS[5:0] are DEFAULT_CONFIG or CONFIG.

Valid values are 640 to 640000 µT.

Configures the duration of the communication cycle in microticks.

18.2.6.9 FLXAnFRGTUC2 — FlexRay GTU Configuration Register 2

Access: This register can be read/written in 8-, 16-, or 32-bit units.

Address: <FLXn_base> + $00A4_H$

Value after reset: $0002\ 000A_H$

Bit	31	30	29	28	27	26	25	24	23	22	21	20	19	18	17	16
	—	—	—	—	—	—	—	—	—	—	—	—	SNM[3:0]			
Value after reset	0	0	0	0	0	0	0	0	0	0	0	0	0	0	1	0
R/W	R	R	R	R	R	R	R	R	R	R	R	R	R/W	R/W	R/W	R/W

Bit	15	14	13	12	11	10	9	8	7	6	5	4	3	2	1	0
	—	—	MPC[13:0]													
Value after reset	0	0	0	0	0	0	0	0	0	0	0	0	1	0	1	0
R/W	R	R	R/W	R/W	R/W	R/W	R/W	R/W	R/W	R/W	R/W	R/W	R/W	R/W	R/W	R/W

Table 18.36 FLXAnFRGTUC2 Register Contents

Bit Position	Bit Name	Function
31 to 20	Reserved	When read, the value after reset is read. When writing, write the value after reset.
19 to 16	SNM[3:0]	Sync Node Max Bit
15, 14	Reserved	When read, the value after reset is read. When writing, write the value after reset.
13 to 0	MPC[13:0]	Setting of Communication Cycle in Macrotick Bit Configures gMacroPerCycle

(1) FLXAnFRGTUC2.SNM

Sync Node Max Bit

The user can only write to these bits when bits FLXAnFRCCSV.POCSDEFAULT_CONFIG or CONFIG.

Valid values are 2 to 15.

Must be identical in all nodes of a cluster.

Maximum number of frames within a cluster with sync frame indicator bit SYN set to 1.

(2) FLXAnFRGTUC2.MPC

Setting of Communication Cycle in Macrotick Bit

The user can only write to these bits when bits FLXAnFRCCSV.POCS [5:0] are DEFAULT_CONFIG or CONFIG.

Valid values are 10 to 16000 MT.

The cycle length must be identical in all nodes of a cluster.

Configures the duration of one communication cycle in macroticks.

18.2.6.10 FLXAnFRGTUC3 — FlexRay GTU Configuration Register 3

Access: This register can be read/written in 8-, 16-, or 32-bit units.

Address: <FLXn_base> + $00A8_H$

Value after reset: $0202\ 0000_H$

Bit	31	30	29	28	27	26	25	24	23	22	21	20	19	18	17	16
	—	MIOB[6:0]							—	MIOA[6:0]						
Value after reset	0	0	0	0	0	0	0	0	0	0	0	0	0	0	1	0
R/W	R	R/W	R/W	R/W	R/W	R/W	R/W	R/W	R	R/W	R/W	R/W	R/W	R/W	R/W	R/W

Bit	15	14	13	12	11	10	9	8	7	6	5	4	3	2	1	0
	UIOB[7:0]								UIOA[7:0]							
Value after reset	0	0	0	0	0	0	0	0	0	0	0	0	0	0	0	0
R/W	R/W	R/W	R/W	R/W	R/W	R/W	R/W	R/W	R/W	R/W	R/W	R/W	R/W	R/W	R/W	R/W

Table 18.37 FLXAnFRGTUC3 Register Contents

Bit Position	Bit Name	Function
31	Reserved	When read, the value after reset is read. When writing, write the value after reset.
30 to 24	MIOB[6:0]	Macrotick Initial Offset Channel B Bit Configures pMacroInitialOffset[B]
23	Reserved	When read, the value after reset is read. When writing, write the value after reset.
22 to 16	MIOA[6:0]	Macrotick Initial Offset Channel A Bit Configures pMacroInitialOffset[A]
15 to 8	UIOB[7:0]	Microtick Initial Offset Channel B Bit Configures pMicroInitialOffset[B]
7 to 0	UIOA[7:0]	Microtick Initial Offset Channel A Bit Configures pMicroInitialOffset[A]

(1) FLXAnFRGTUC3.MIOB

Macrotick Initial Offset Channel B Bit

The user can only write to these bits when bits FLXAnFRCCSV.POCS[5:0] are DEFAULT_CONFIG or CONFIG.

Valid values are 2 to 72 MT.

Must be identical in all nodes of a cluster.

Configures the number of macroticks between the static slot boundary and the subsequent macrotick boundary of the secondary time reference point based on the nominal macrotick duration.

(2) FLXAnFRGTUC3.MIOA

Macrotick Initial Offset Channel A Bit

The user can only write to these bits when bits FLXAnFRCCSV.POCS[5:0] are DEFAULT_CONFIG or CONFIG.

Valid values are 2 to 72 MT.

Must be identical in all nodes of a cluster.

Configures the number of macroticks between the static slot boundary and the subsequent macrotick boundary of the secondary time reference point based on the nominal macrotick duration.

(3) FLXAnFRGTUC3.UIOB

Microtick Initial Offset Channel B Bit

The user can only write to these bits when bits FLXAnFRCCSV.POCSDEFAULT_CONFIG or CONFIG.

Valid values are 0 to 240 µT.

Configures the number of microticks between the actual time reference point on channel B and the subsequent macrotick boundary of the secondary time reference point. The parameter depends on pDelayCompensation [B] and therefore has to be set for each channel independently.

(4) FLXAnFRGTUC3.UIOA

Microtick Initial Offset Channel A Bit

The user can only write to these bits when bits FLXAnFRCCSV.POCS [5:0] are DEFAULT_CONFIG or CONFIG.

Valid values are 0 to 240 µT.

Configures the number of microticks between the actual time reference point on channel A and the subsequent macrotick boundary of the secondary time reference point. The parameter depends on pDelayCompensation [A] and therefore has to be set for each channel independently.

18.2.6.11 FLXAnFRGTUC4 — FlexRay GTU Configuration Register 4

For details about configuration of FLXAnFRGTUC4.NIT and FLXAnFRGTUC4.OCS see **Section 18.3.2.5, Configuration of NIT Start and Offset Correction Start**.

Access: This register can be read/written in 8-, 16-, or 32-bit units.

Address: <FLXn_base> + $00AC_H$

Value after reset: $0008\ 0007_H$

Bit	31	30	29	28	27	26	25	24	23	22	21	20	19	18	17	16
	—	—	OCS[13:0]													
Value after reset	0	0	0	0	0	0	0	0	0	0	0	0	1	0	0	0
R/W	R	R	R/W	R/W	R/W	R/W	R/W	R/W	R/W	R/W	R/W	R/W	R/W	R/W	R/W	R/W

Bit	15	14	13	12	11	10	9	8	7	6	5	4	3	2	1	0
	—	—	NIT[13:0]													
Value after reset	0	0	0	0	0	0	0	0	0	0	0	0	0	1	1	1
R/W	R	R	R/W	R/W	R/W	R/W	R/W	R/W	R/W	R/W	R/W	R/W	R/W	R/W	R/W	R/W

Table 18.38 FLXAnFRGTUC4 Register Contents

Bit Position	Bit Name	Function
31, 30	Reserved	When read, the value after reset is read. When writing, write the value after reset.
29 to 16	OCS[13:0]	Offset Correction Start Bit Configures (gOffsetCorrectionStart - 1)
15, 14	Reserved	When read, the value after reset is read. When writing, write the value after reset.
13 to 0	NIT[13:0]	Network Idle Time Start Bit Configures (gMacroPerCycle -gdNIT - 1)

(1) FLXAnFRGTUC4.OCS

Offset Correction Start Bit

The user can only write to these bits when bits FLXAnFRCCSV.POCS[5:0] are DEFAULT_CONFIG or CONFIG.

Valid values are 8 to 15998 MT.

For cluster consisting of E-Ray implementations only, it is sufficient to program FLXAnFRGTUC4.OCS = FLXAnFRGTUC4.NIT + 1.

Must be identical in all nodes of a cluster.

Determines the start of the offset correction within the NIT phase, calculated from start of cycle.

(2) FLXAnFRGTUC4.NIT

Network Idle Time Start Bit

The user can only write to these bits when bits FLXAnFRCCSV.POCS[5:0] are DEFAULT_CONFIG or CONFIG.

Valid values are 7 to 15997 MT.

Must be identical in all nodes of a cluster.

Configures the starting point of the Network Idle Time NIT at the end of the communication cycle expressed in terms of macroticks from the beginning of the cycle. The start of NIT is recognized if Macrotick = gMacroPerCycle -gdNIT -1 and the increment pulse of Macrotick is set.

18.2.6.12 FLXAnFRGTUC5 — FlexRay GTU Configuration Register 5

Access: This register can be read/written in 8-, 16-, or 32-bit units.

Address: <FLXn_base> + $00B0_H$

Value after reset: $0E00\ 0000_H$

Bit	31	30	29	28	27	26	25	24	23	22	21	20	19	18	17	16
	DEC[7:0]								—	—	—	CDD[4:0]				
Value after reset	0	0	0	0	1	1	1	0	0	0	0	0	0	0	0	0
R/W	R/W	R/W	R/W	R/W	R/W	R/W	R/W	R/W	R	R	R	R/W	R/W	R/W	R/W	R/W

Bit	15	14	13	12	11	10	9	8	7	6	5	4	3	2	1	0
	DCB[7:0]								DCA[7:0]							
Value after reset	0	0	0	0	0	0	0	0	0	0	0	0	0	0	0	0
R/W	R/W	R/W	R/W	R/W	R/W	R/W	R/W	R/W	R/W	R/W	R/W	R/W	R/W	R/W	R/W	R/W

Table 18.39 FLXAnFRGTUC5 Register Contents

Bit Position	Bit Name	Function
31 to 24	DEC[7:0]	Decoding Correction Bit Configures pDecodingCorrection
23 to 21	Reserved	When read, the value after reset is read. When writing, write the value after reset.
20 to 16	CDD[4:0]	Cluster Drift Damping Bit Configures pClusterDriftDamping
15 to 8	DCB[7:0]	Delay Compensation Channel B Bit Configures pDelayCompensation[B]
7 to 0	DCA[7:0]	Delay Compensation Channel A Bit Configures pDelayCompensation[A]

(1) FLXAnFRGTUC5.DEC

Decoding Correction Bit

The user can only write to these bits when bits FLXAnFRCCSV.POCS[5:0] are DEFAULT_CONFIG or CONFIG.

Valid values are 14 to 143 µT.

Configures the decoding correction value in microticks used to determine the primary time reference point.

(2) FLXAnFRGTUC5.CDD

Cluster Drift Damping Bit

The user can only write to these bits when bits FLXAnFRCCSV.POCS[5:0] are DEFAULT_CONFIG or CONFIG.

Valid values are 0 to 20 µT.

Configures the cluster drift damping value in microticks used in clock synchronization to minimize accumulation of rounding errors.

(3) FLXAnFRGTUC5.DCB

Delay Compensation Channel B Bit

The user can only write to these bits when bits FLXAnFRCCSV.POCS[5:0] are DEFAULT_CONFIG or CONFIG.

Valid values are 0 to 200 µT.

Used to compensate for reception delays on channel B. This covers assumed propagation delay up to cPropagationDelayMax for microticks in the range of 0.0125 to 0.05µs. In practice, the minimum of the propagation delays of all sync nodes should be applied.

(4) FLXAnFRGTUC5.DCA

Delay Compensation Channel A Bit

The user can only write to these bits when bits FLXAnFRCCSV.POCS[5:0] are DEFAULT_CONFIG or CONFIG.

Valid values are 0 to 200 µT.

Used to compensate for reception delays on channel A. This covers assumed propagation delay up to cPropagationDelayMax for microticks in the range of 0.0125 to 0.05µs. In practice, the minimum of the propagation delays of all sync nodes should be applied.

18.2.6.13 FLXAnFRGTUC6 — FlexRay GTU Configuration Register 6

Access: This register can be read/written in 8-, 16-, or 32-bit units.

Address: <FLXn_base> + $00B4_H$

Value after reset: $0002\ 0000_H$

Bit	31	30	29	28	27	26	25	24	23	22	21	20	19	18	17	16
	—	—	—	—	—	MOD[10:0]										
Value after reset	0	0	0	0	0	0	0	0	0	0	0	0	0	0	1	0
R/W	R	R	R	R	R	R/W	R/W	R/W	R/W	R/W	R/W	R/W	R/W	R/W	R/W	R/W

Bit	15	14	13	12	11	10	9	8	7	6	5	4	3	2	1	0
	—	—	—	—	—	ASR[10:0]										
Value after reset	0	0	0	0	0	0	0	0	0	0	0	0	0	0	0	0
R/W	R	R	R	R	R	R/W	R/W	R/W	R/W	R/W	R/W	R/W	R/W	R/W	R/W	R/W

Table 18.40 FLXAnFRGTUC6 Register Contents

Bit Position	Bit Name	Function
31 to 27	Reserved	When read, the value after reset is read. When writing, write the value after reset.
26 to 16	MOD[10:0]	Maximum Oscillator Drift Bit Configures pdMaxDrift
15 to 11	Reserved	When read, the value after reset is read. When writing, write the value after reset.
10 to 0	ASR[10:0]	Accepted Startup Range Bit Configures pdAcceptedStartupRange

(1) FLXAnFRGTUC6.MOD

Maximum Oscillator Drift Bit

The user can only write to these bits when bits FLXAnFRCCSV.POCS[5:0] are DEFAULT_CONFIG or CONFIG.

Valid values are 2 to 1923 µT.

Maximum drift offset between two nodes that operate with unsynchronized clocks over one communication cycle in µT.

(2) FLXAnFRGTUC6.ASR

Accepted Startup Range Bit

The user can only write to these bits when bits FLXAnFRCCSV.POCS[5:0] are DEFAULT_CONFIG or CONFIG.

Valid values are 0 to 1875 µT.

Number of microticks constituting the expanded range of measured deviation for startup frames during integration.

18.2.6.14 FLXAnFRGTUC7 — FlexRay GTU Configuration Register 7

Access: This register can be read/written in 8-, 16-, or 32-bit units.

Address: <FLXn_base> + $00B8_H$

Value after reset: $0002\ 0004_H$

Bit	31	30	29	28	27	26	25	24	23	22	21	20	19	18	17	16
	—	—	—	—	—	—	NSS[9:0]									
Value after reset	0	0	0	0	0	0	0	0	0	0	0	0	0	0	1	0
R/W	R	R	R	R	R	R	R/W	R/W	R/W	R/W	R/W	R/W	R/W	R/W	R/W	R/W

Bit	15	14	13	12	11	10	9	8	7	6	5	4	3	2	1	0
	—	—	—	—	—	—	SSL[9:0]									
Value after reset	0	0	0	0	0	0	0	0	0	0	0	0	0	1	0	0
R/W	R	R	R	R	R	R	R/W	R/W	R/W	R/W	R/W	R/W	R/W	R/W	R/W	R/W

Table 18.41 FLXAnFRGTUC7 Register Contents

Bit Position	Bit Name	Function
31 to 26	Reserved	When read, the value after reset is read. When writing, write the value after reset.
25 to 16	NSS[9:0]	Number of Static Slots Bit Configures gNumberOfStaticSlots
15 to 10	Reserved	When read, the value after reset is read. When writing, write the value after reset.
9 to 0	SSL[9:0]	Static Slot Length Bit Configures gdStaticSlot

(1) FLXAnFRGTUC7.NSS

Number of Static Slots Bit

The user can only write to these bits when bits FLXAnFRCCSV.POCS[5:0] are DEFAULT_CONFIG or CONFIG.

Valid values are 2 to 1023.

The number of static slots must be identical in all nodes of a cluster.

Configures the number of static slots in a cycle.

(2) FLXAnFRGTUC7.SSL

Static Slot Length Bit

The user can only write to these bits when bits FLXAnFRCCSV.POCS[5:0] are DEFAULT_CONFIG or CONFIG.

Valid values are 4 to 659 MT.

The static slot length must be identical in all nodes of a cluster.

Configures the length of a static slot in macroticks.

18.2.6.15 FLXAnFRGTUC8 — FlexRay GTU Configuration Register 8

Access: This register can be read/written in 8-, 16-, or 32-bit units.

Address: <FLXn_base> + $00BC_H$

Value after reset: $0000\ 0002_H$

Bit	31	30	29	28	27	26	25	24	23	22	21	20	19	18	17	16
	—	—	—	NMS[12:0]												
Value after reset	0	0	0	0	0	0	0	0	0	0	0	0	0	0	0	0
R/W	R	R	R	R/W	R/W	R/W	R/W	R/W	R/W	R/W	R/W	R/W	R/W	R/W	R/W	R/W

Bit	15	14	13	12	11	10	9	8	7	6	5	4	3	2	1	0
	—	—	—	—	—	—	—	—	—	—	MSL[5:0]					
Value after reset	0	0	0	0	0	0	0	0	0	0	0	0	0	0	1	0
R/W	R	R	R	R	R	R	R	R	R	R	R/W	R/W	R/W	R/W	R/W	R/W

Table 18.42 FLXAnFRGTUC8 Register Contents

Bit Position	Bit Name	Function
31 to 29	Reserved	When read, the value after reset is read. When writing, write the value after reset.
28 to 16	NMS[12:0]	Number of Minislots Bit Configures gNumberOfMinislots
15 to 6	Reserved	When read, the value after reset is read. When writing, write the value after reset.
5 to 0	MSL[5:0]	Minislot Length Bit Configures gdMinislot

(1) FLXAnFRGTUC8.NMS

Number of Minislots Bit

The user can only write to these bits when bits FLXAnFRCCSV.POCS[5:0] are DEFAULT_CONFIG or CONFIG.

Valid values are 0 to 7986.

The number of minislots must be identical in all nodes of a cluster.

Configures the number of minislots within the dynamic segment of a cycle.

(2) FLXAnFRGTUC8.MSL

Minislot Length Bit

The user can only write to these bits when bits FLXAnFRCCSV.POCS[5:0] are DEFAULT_CONFIG or CONFIG.

Valid values are 2 to 63 MT.

The minislot length must be identical in all nodes of a cluster.

Configures the length of a minislot in macroticks.

18.2.6.16 FLXAnFRGTUC9 — FlexRay GTU Configuration Register 9

Access: This register can be read/written in 8-, 16-, or 32-bit units.

Address: <FLXn_base> + $00C0_H$

Value after reset: $0000\ 0101_H$

Bit	31	30	29	28	27	26	25	24	23	22	21	20	19	18	17	16
	—	—	—	—	—	—	—	—	—	—	—	—	—	—	DSI[1:0]	
Value after reset	0	0	0	0	0	0	0	0	0	0	0	0	0	0	0	0
R/W	R	R	R	R	R	R	R	R	R	R	R	R	R	R	R/W	R/W

Bit	15	14	13	12	11	10	9	8	7	6	5	4	3	2	1	0
	—	—	—	MAPO[4:0]					—	—	APO[5:0]					
Value after reset	0	0	0	0	0	0	0	1	0	0	0	0	0	0	0	1
R/W	R	R	R	R/W	R/W	R/W	R/W	R/W	R	R	R/W	R/W	R/W	R/W	R/W	R/W

Table 18.43 FLXAnFRGTUC9 Register Contents

Bit Position	Bit Name	Function
31 to 18	Reserved	When read, the value after reset is read. When writing, write the value after reset.
17, 16	DSI[1:0]	Dynamic Slot Idle Phase Bit Configures gdDynamicSlotIdlePhase
15 to 13	Reserved	When read, the value after reset is read. When writing, write the value after reset.
12 to 8	MAPO[4:0]	Minislot Action Point Offset Bit Configures gdMinislotActionPointOffset
7, 6	Reserved	When read, the value after reset is read. When writing, write the value after reset.
5 to 0	APO[5:0]	Action Point Offset Bit Configures gdActionPointOffset

(1) FLXAnFRGTUC9.DSI

Dynamic Slot Idle Phase Bit

The user can only write to these bits when bits FLXAnFRCCSV.POCS[5:0] are DEFAULT_CONFIG or CONFIG.

Valid values are 0 to 2 Minislot.

Must be identical in all nodes of a cluster.

Configures the duration of the dynamic slot idle phase in the number of minislots. The duration has to be greater or equal than the idle detection time.

(2) FLXAnFRGTUC9.MAPO

Minislot Action Point Offset Bit

The user can only write to these bits when bits FLXAnFRCCSV.POCS[5:0] are DEFAULT_CONFIG or CONFIG.

Valid values are 1 to 31 MT.

Must be identical in all nodes of a cluster.

Configures the action point offset in macroticks within the minislots of the dynamic segment.

(3) FLXAnFRGTUC9.APO

Action Point Offset Bit

The user can only write to these bits when bits FLXAnFRCCSV.POCS[5:0] are DEFAULT_CONFIG or CONFIG.

Valid values are 1 to 63 MT.

Must be identical in all nodes of a cluster.

Configures the action point offset in macroticks within static slots and symbol window.

18.2.6.17 FLXAnFRGTUC10 — FlexRay GTU Configuration Register 10

Access: This register can be read/written in 8-, 16-, or 32-bit units.

Address: <FLXn_base> + $00C4_H$

Value after reset: $0002\ 0005_H$

Bit	31	30	29	28	27	26	25	24	23	22	21	20	19	18	17	16
	—	—	—	—	—	MRC[10:0]										
Value after reset	0	0	0	0	0	0	0	0	0	0	0	0	0	0	1	0
R/W	R	R	R	R	R	R/W	R/W	R/W	R/W	R/W	R/W	R/W	R/W	R/W	R/W	R/W

Bit	15	14	13	12	11	10	9	8	7	6	5	4	3	2	1	0
	—	—	MOC[13:0]													
Value after reset	0	0	0	0	0	0	0	0	0	0	0	0	0	1	0	1
R/W	R	R	R/W	R/W	R/W	R/W	R/W	R/W	R/W	R/W	R/W	R/W	R/W	R/W	R/W	R/W

Table 18.44 FLXAnFRGTUC10 Register Contents

Bit Position	Bit Name	Function
31 to 27	Reserved	When read, the value after reset is read. When writing, write the value after reset.
26 to 16	MRC[10:0]	Maximum Rate Correction Bit Configures pRateCorrectionOut
15, 14	Reserved	When read, the value after reset is read. When writing, write the value after reset.
13 to 0	MOC[13:0]	Maximum Offset Correction Bit Configures pOffsetCorrectionOut

(1) FLXAnFRGTUC10.MRC

Maximum Rate Correction Bit

The user can only write to these bits when bits FLXAnFRCCSV.POCS[5:0] are DEFAULT_CONFIG or CONFIG.

Valid values are 2 to 1923 µT.

Holds the maximum permitted rate correction value to be applied by the internal clock synchronization algorithm. The CC checks only the internal rate correction value against the maximum rate correction value (absolute value).

(2) FLXAnFRGTUC10.MOC

Maximum Offset Correction Bit

The user can only write to these bits when bits FLXAnFRCCSV.POCS[5:0] are DEFAULT_CONFIG or CONFIG.

Valid values are 5 to 15266 µT.

Holds the maximum permitted offset correction value (absolute value) to be applied by the internal clock synchronization algorithm (absolute value). The CC checks only the internal offset correction value against the maximum offset correction value.

18.2.6.18 FLXAnFRGTUC11 — FlexRay GTU Configuration Register 11

Access: This register can be read/written in 8-, 16-, or 32-bit units.

Address: <FLXn_base> + $00C8_H$

Value after reset: $0000\ 0000_H$

Bit	31	30	29	28	27	26	25	24	23	22	21	20	19	18	17	16
	—	—	—	—	—	ERC[2:0]			—	—	—	—	—	EOC[2:0]		
Value after reset	0	0	0	0	0	0	0	0	0	0	0	0	0	0	0	0
R/W	R	R	R	R	R	R/W	R/W	R/W	R	R	R	R	R	R/W	R/W	R/W

Bit	15	14	13	12	11	10	9	8	7	6	5	4	3	2	1	0
	—	—	—	—	—	—	ERCC[1:0]		—	—	—	—	—	—	EOCC[1:0]	
Value after reset	0	0	0	0	0	0	0	0	0	0	0	0	0	0	0	0
R/W	R	R	R	R	R	R	R/W	R/W	R	R	R	R	R	R	R/W	R/W

Table 18.45 FLXAnFRGTUC11 Register Contents

Bit Position	Bit Name	Function
31 to 27	Reserved	When read, the value after reset is read. When writing, write the value after reset.
26 to 24	ERC[2:0]	External Rate Correction Bit Configures pExternRateCorrection
23 to 19	Reserved	When read, the value after reset is read. When writing, write the value after reset.
18 to 16	EOC[2:0]	External Offset Correction Bit Configures pExternOffsetCorrection
15 to 10	Reserved	When read, the value after reset is read. When writing, write the value after reset.
9, 8	ERCC[1:0]	External Rate Correction Control Bit Configures vExternRateControl 00: External rate correction is prohibited. 01: External rate correction is prohibited. 10: Subtract 11: Add
7 to 2	Reserved	When read, the value after reset is read. When writing, write the value after reset.
1, 0	EOCC[1:0]	External Offset Correction Control Bit Configures vExternOffsetControl 00: External offset correction is prohibited. 01: External offset correction is prohibited. 10: Subtract 11: Add

(1) FLXAnFRGTUC11.ERC

External Rate Correction Bit

The user can only write to these bits when bits FLXAnFRCCSV.POCS[5:0] are DEFAULT_CONFIG or CONFIG.

Valid values are 0 to 7 µT.

Holds the external rate correction value in microticks to be applied by the internal clock synchronization algorithm. The value is subtracted / added from / to the calculated rate correction value. The value is applied during NIT.

(2) FLXAnFRGTUC11.EOC

External Offset Correction Bit

The user can only write to these bits when bits FLXAnFRCCSV.POCS[5:0] are DEFAULT_CONFIG or CONFIG.

Valid values are 0 to 7 µT.

Holds the external offset correction value in microticks to be applied by the internal clock synchronization algorithm. The value is subtracted / added from / to the calculated offset correction value. The value is applied during NIT.

(3) FLXAnFRGTUC11.ERCC

External Rate Correction Control Bit

Should be modified only outside NIT (Network Idle Time).

Writing the following values enables the external rate correction.

00 = External rate correction is prohibited.

01 = External rate correction is prohibited.

10 = Subtract

External rate correction value subtracted from calculated rate correction value

11 = Add

External rate correction value added to calculated rate correction value

(4) FLXAnFRGTUC11.EOCC

External Offset Correction Control Bit

Should be modified only outside NIT (Network Idle Time).

Writing the following values enables the external offset correction.

00 = External offset correction is prohibited.

01 = External offset correction is prohibited.

10 = Subtract

External offset correction value subtracted from calculated offset correction value

11 = Add

External offset correction value added to calculated offset correction value

18.2.7 CC Status Registers

During 8/16-bit accesses to status variables coded with more than 8/16-bit, the variable might be updated by the CC between two accesses (non-atomic read accesses).

18.2.7.1 FLXAnFRCCSV — FlexRay CC Status Vector Register

Access: This register can be read/written in 8-, 16-, or 32-bit units.

Address: <FLXn_base> + 0100_H

Value after reset: $0010\ 4000_H$

Bit	31	30	29	28	27	26	25	24	23	22	21	20	19	18	17	16
	—	—	PSL[5:0]						RCA[4:0]					WSV[2:0]		
Value after reset	0	0	0	0	0	0	0	0	0	0	0	1	0	0	0	0
R/W	R	R	R	R	R	R	R	R	R	R	R	R	R	R	R	R

Bit	15	14	13	12	11	10	9	8	7	6	5	4	3	2	1	0
	—	CSI	CSAI	CSNI	—	—	SLM[1:0]		HRQ	FSI	POCS[5:0]					
Value after reset	0	1	0	0	0	0	0	0	0	0	0	0	0	0	0	0
R/W	R	R	R	R	R	R	R	R	R	R	R	R	R	R	R	R

Table 18.46 FLXAnFRCCSV Register Contents (1/2)

Bit	Symbol	Function
31, 30	Reserved	When read, the value after reset is read.
29 to 24	PSL[5:0]	POC Status Log Flag Status of FLXAnFRCCSV.POCS immediately before entering HALT state.
23 to 19	RCA[4:0]	Remaining Coldstart Attempts Flag Indicates vRemainingColdstartAttempts
18 to 16	WSV[2:0]	Wakeup Status Flag Indicates vPOC!WakeupStatus 000: UNDEFINED 001: RECEIVED_HEADER 010: RECEIVED_WUP 011: COLLISION_HEADER 100: COLLISION_WUP 101: COLLISION_UNKNOWN 110: TRANSMITTED 111: Reserved
15	Reserved	When read, the value after reset is read.
14	CSI	Cold Start Inhibit Flag Indicates vColdStartInhibit 0: Cold starting of node enabled 1: Cold starting of node disabled
13	CSAI	Coldstart Abort Indicator Flag
12	CSNI	Coldstart Noise Indicator Flag Indicates vPOC!ColdstartNoise
11, 10	Reserved	When read, the value after reset is read.
9, 8	SLM[1:0]	Slot Mode Flag Indicates vPOC!SlotMode 00: SINGLE 01: reserved 10: ALL_PENDING 11: ALL

Table 18.46 FLXAnFRCCSV Register Contents (2/2)

Bit	Symbol	Function
7	HRQ	Halt Request Flag Indicates vPOC!CHIHaltRequest
6	FSI	Freeze Status Indicator Flag Indicates vPOC!Freeze
5 to 0	POCS[5:0]	Protocol Operation Control Status Flag

(1) FLXAnFRCCSV.PSL

POC Status Log Flag

Set the value of bits FLXAnFRCCSV.POCS[5:0] immediately before entering HALT state.

Set to HALT when FREEZE command is applied during HALT state and FLXAnFRCCSV.FSI is not already set i.e. the HALT state was not reached by FREEZE command.

Reset to "000000_B" when leaving HALT state.

(2) FLXAnFRCCSV.RCA

Remaining Coldstart Attempts Flag

Indicates the number of remaining coldstart attempts (vRemainingColdstartAttempts).

The value after a reset during CONFIG and DEFAULT_CONFIG state is also bits FLXAnFRSUCC1.CSA[4:0].

The RUN command resets this counter to the maximum number of coldstart attempts as configured by the FLXAnFRSUCC1.CSA [4:0] bits.

(3) FLXAnFRCCSV.WSV

Wakeup Status Flag

Indicates the status of the current wakeup attempt (vPOC!WakeupStatus).

Reset to 0 when entering Wakeup state, by CHI command RESET_STATUS_INDICATORS, or by transition from DEFAULT_CONFIG to CONFIG state

000_B = UNDEFINED

Wakeup not yet executed by the CC.

001_B = RECEIVED_HEADER

Set when the CC finishes wakeup due to the reception of a frame header without coding violation on either channel in WAKEUP_LISTEN state.

010_B = RECEIVED_WUP

Set when the CC finishes wakeup due to the reception of a valid wakeup pattern on the configured wakeup channel in WAKEUP_LISTEN state.

011_B = COLLISION_HEADER

Set when the CC stops wakeup due to a detected collision during wakeup pattern transmission by receiving a valid header on either channel.

100_B = COLLISION_WUP

Set when the CC stops wakeup due to a detected collision during wakeup pattern transmission by receiving a valid wakeup pattern on the configured wakeup channel.

101_B = COLLISION_UNKNOWN

Set when the CC stops wakeup by leaving WAKEUP_DETECT state after expiration of the wakeup timer without receiving a valid wakeup pattern or a valid frame header.

110_B = TRANSMITTED

Set when the CC has successfully completed the transmission of the wakeup pattern.

111_B = reserved

(4) FLXAnFRCCSV.CSI

Cold Start Inhibit Flag

Indicates that the node is disabled from cold starting (vColdStartInhibit).

The flag is set to 1 whenever the POC enters READY state due to CHI command READY.

The flag has to be reset under control of the Host by CHI command ALLOW_COLDSTART (bits FLXAnFRSUCC1.CMD[3:0] are 1001_B).

(5) FLXAnFRCCSV.CSAI

Coldstart Abort Indicator Flag

Coldstart aborted.

Reset by CHI command RESET_STATUS_INDICATORS or by transition from HALT to DEFAULT_CONFIG state or from READY to STARTUP state.

(6) FLXAnFRCCSV.CSNI

Coldstart Noise Indicator Flag

Indicates that the cold start procedure occurred under noisy conditions (vPOC!ColdstartNoise).

Reset by CHI command RESET_STATUS_INDICATORS or by transition from HALT to DEFAULT_CONFIG state or from READY to STARTUP state.

(7) FLXAnFRCCSV.SLM

Slot Mode Flag

Indicates the actual slot mode of the POC (vPOC!SlotMode) in states READY, WAKEUP, STARTUP, NORMAL_ACTIVE, and NORMAL_PASSIVE.

Default value is SINGLE. Changes to ALL, depending on FLXAnFRSUCC1.TSM.

In NORMAL_ACTIVE or NORMAL_PASSIVE state the CHI command ALL_SLOTS will change the slot mode from SINGLE over ALL_PENDING to ALL.

Set FLXAnFRSUCC1.TSM to SINGLE except for NORMAL_ACTIVE or NORMAL_PASSIVE.

(8) FLXAnFRCCSV.HRQ

Halt Request Flag

Indicates that a request from the Host has been received to halt the POC at the end of the communication cycle (vPOC!CHIHaltRequest).

Reset by transition from HALT to DEFAULT_CONFIG state or when entering READY state.

(9) FLXAnFRCCSV.FSI

Freeze Status Indicator Flag

Indicates that the POC has entered the HALT state due to CHI command, FREEZE (bits FLXAnFRSUCC1.CMD[3:0] are 0111_B) or due to an error condition requiring an immediate POC halt (vPOC!Freeze).

Reset by transition from HALT to DEFAULT_CONFIG state.

(10) FLXAnFRCCSV.POCS

Protocol Operation Control Status Flag

Indicates the actual state of operation of the CC Protocol Operation Control

$00\ 0000_B$ = DEFAULT_CONFIG state

$00\ 0001_B$ = READY state

$00\ 0010_B$ = NORMAL_ACTIVE state

$00\ 0011_B$ = NORMAL_PASSIVE state

$00\ 0100_B$ = HALT state

$00\ 1111_B$ = CONFIG state

Indicates the actual state of operation of the POC in the wakeup path

$01\ 0000_B$ = WAKEUP_STANDBY state

$01\ 0001_B$ = WAKEUP_LISTEN state

$01\ 0010_B$ = WAKEUP_SEND state

$01\ 0011_B$ = WAKEUP_DETECT state

Indicates the actual state of operation of the POC in the startup path

$10\ 0000_B$ = STARTUP_PREPARE state

$10\ 0001_B$ = COLDSTART_LISTEN state

$10\ 0010_B$ = COLDSTART_COLLISION_RESOLUTION state

$10\ 0011_B$ = COLDSTART_CONSISTENCY_CHECK state

$10\ 0100_B$ = COLDSTART_GAP state

$10\ 0101_B$ = COLDSTART_JOIN State

$10\ 0110_B$ = INTEGRATION_COLDSTART_CHECK state

$10\ 0111_B$ = INTEGRATION_LISTEN state

$10\ 1000_B$ = INTEGRATION_CONSISTENCY_CHECK state

$10\ 1001_B$ = INITIALIZE_SCHEDULE state

$10\ 1010_B$ = ABORT_STARTUP state

$10\ 1011_B$ = STARTUP_SUCCESS state

others = reserved

18.2.7.2 FLXAnFRCCEV — FlexRay CC Error Vector Register

Access: This register can only be read in 8-, 16-, or 32-bit units.

Address: <FLXn_base> + 0104_H

Value after reset: $0000\ 0000_H$

Bit	31	30	29	28	27	26	25	24	23	22	21	20	19	18	17	16
	—	—	—	—	—	—	—	—	—	—	—	—	—	—	—	—
Value after reset	0	0	0	0	0	0	0	0	0	0	0	0	0	0	0	0
R/W	R	R	R	R	R	R	R	R	R	R	R	R	R	R	R	R

Bit	15	14	13	12	11	10	9	8	7	6	5	4	3	2	1	0
	—	—	—	PTAC[4:0]					ERRM[1:0]		—	—	CCFC[3:0]			
Value after reset	0	0	0	0	0	0	0	0	0	0	0	0	0	0	0	0
R/W	R	R	R	R	R	R	R	R	R	R	R	R	R	R	R	R

Table 18.47 FLXAnFRCCEV Register Contents

Bit Position	Bit Name	Function
31 to 13	Reserved	When read, the value after reset is read.
12 to 8	PTAC[4:0]	Passive to Active Count Flag Indicates vAllowPassiveToActive
7, 6	ERRM[1:0]	Error Mode Flag Indicates vPOC!ErrorMode 00: ACTIVE 01: PASSIVE 10: COMM_HALT 11: reserved
5, 4	Reserved	When read, the value after reset is read.
3 to 0	CCFC[3:0]	Clock Correction Failed Counter Indicates vClockCorrectionFailed

(1) FLXAnFRCCEV.PTAC

Passive to Active Count Flag

Indicates the number of consecutive even / odd cycle pairs that have passed with valid rate and offset correction terms, while the node is waiting to transit from NORMAL_PASSIVE state to NORMAL_ACTIVE state. The transition takes place when this bit equals to the value of bits FLXAnFRSUCC1.PTA[4:0] –1.

Reset by transition from HALT to DEFAULT_CONFIG state or when entering READY state.

(2) FLXAnFRCCEV.ERRM

Error Mode Flag

Indicates the actual error mode of the POC (vPOC!ErrorMode).

Reset by transition from HALT to DEFAULT_CONFIG state or when entering READY state.

(3) FLXAnFRCCEV.CCFC

Clock Correction Failed Counter

Indicates the clockcorrection failed counter of the POC (vClockCorrectionFailed).

The Clock Correction Failed Counter is incremented by one at the end of any odd communication cycle where either the missing offset correction error or missing rate correction error are active.

The Clock Correction Failed Counter is reset to 0 at the end of an odd communication cycle if neither the offset correction failed nor the rate correction failed errors are active.

The Clock Correction Failed Counter stops at 15.

Reset by transition from HALT to DEFAULT_CONFIG state or when entering READY state.

18.2.7.3 FLXAnFRSCV — FlexRay Slot Counter Value Register

Access: This register can only be read in 8-, 16-, or 32-bit units.

Address: <FLXn_base> + 0110_H

Value after reset: $0000\ 0000_H$

Bit	31	30	29	28	27	26	25	24	23	22	21	20	19	18	17	16
	—	—	—	—	—	SCCB[10:0]										
Value after reset	0	0	0	0	0	0	0	0	0	0	0	0	0	0	0	0
R/W	R	R	R	R	R	R	R	R	R	R	R	R	R	R	R	R

Bit	15	14	13	12	11	10	9	8	7	6	5	4	3	2	1	0
	—	—	—	—	—	SCCA[10:0]										
Value after reset	0	0	0	0	0	0	0	0	0	0	0	0	0	0	0	0
R/W	R	R	R	R	R	R	R	R	R	R	R	R	R	R	R	R

Table 18.48 FLXAnFRSCV Register Contents

Bit Position	Bit Name	Function
31 to 27	Reserved	When read, the value after reset is read.
26 to 16	SCCB[10:0]	Slot Counter Channel B Indicates vSlotCounter[B]
15 to 11	Reserved	When read, the value after reset is read.
10 to 0	SCCA[10:0]	Slot Counter Channel A Indicates vSlotCounter[A]

(1) FLXAnFRSCV.SCCB

Slot Counter Channel B

Current slot counter value on channel B (vSlotCounter[B]). The value is incremented by the CC and reset at the start of a communication cycle.

Reset when leaving CONFIG state or when entering STARTUP state.

(2) FLXAnFRSCV.SCCA

Slot Counter Channel A

Current slot counter value on channel A (vSlotCounter[A]). The value is incremented by the CC and reset at the start of a communication cycle.

Reset when leaving CONFIG state or when entering STARTUP state.

18.2.7.4 FLXAnFRMTCCV — FlexRay Macrotick and Cycle Counter Value Register

Access: This register can only be read in 8-, 16-, or 32-bit units.

Address: <FLXn_base> + 0114_H

Value after reset: $0000\ 0000_H$

Bit	31	30	29	28	27	26	25	24	23	22	21	20	19	18	17	16
	—	—	—	—	—	—	—	—	—	—	CCV[5:0]					
Value after reset	0	0	0	0	0	0	0	0	0	0	0	0	0	0	0	0
R/W	R	R	R	R	R	R	R	R	R	R	R	R	R	R	R	R

Bit	15	14	13	12	11	10	9	8	7	6	5	4	3	2	1	0
	—	—	MTV[13:0]													
Value after reset	0	0	0	0	0	0	0	0	0	0	0	0	0	0	0	0
R/W	R	R	R	R	R	R	R	R	R	R	R	R	R	R	R	R

Table 18.49 FLXAnFRMTCCV Register Contents

Bit Position	Bit Name	Function
31 to 22	Reserved	When read, the value after reset is read.
21 to 16	CCV[5:0]	Cycle Counter Value Indicates vCycleCounter
15, 14	Reserved	When read, the value after reset is read.
13 to 0	MTV[13:0]	Macrotick Value Indicates vMacrotick

(1) FLXAnFRMTCCV.CCV

Cycle Counter Value

Current cycle counter value (vCycleCounter). The value is incremented by the CC at the start of a communication cycle.

Reset when leaving CONFIG state or when entering STARTUP state.

(2) FLXAnFRMTCCV.MTV

Macrotick Value

Current macrotick value (vMacrotick). The value is incremented by the CC and reset at the start of a communication cycle.

Reset when leaving CONFIG state or when entering STARTUP state.

18.2.7.5 FLXAnFRRCV — FlexRay Rate Correction Value Register

Access: This register can only be read in 8-, 16-, or 32-bit units.

Address: <FLXn_base> + 0118_H

Value after reset: $0000\ 0000_H$

Bit	31	30	29	28	27	26	25	24	23	22	21	20	19	18	17	16
	—	—	—	—	—	—	—	—	—	—	—	—	—	—	—	—
Value after reset	0	0	0	0	0	0	0	0	0	0	0	0	0	0	0	0
R/W	R	R	R	R	R	R	R	R	R	R	R	R	R	R	R	R

Bit	15	14	13	12	11	10	9	8	7	6	5	4	3	2	1	0
	—	—	—	—	RCV[11:0]											
Value after reset	0	0	0	0	0	0	0	0	0	0	0	0	0	0	0	0
R/W	R	R	R	R	R	R	R	R	R	R	R	R	R	R	R	R

Table 18.50 FLXAnFRRCV Register Contents

Bit Position	Bit Name	Function
31 to 12	Reserved	When read, the value after reset is read.
11 to 0	RCV[11:0]	Rate Correction Value Flag Indicates vRateCorrection

(1) FLXAnFRRCV.RCV

Rate Correction Value Flag

Indicates internal rate correction value (vRateCorrection/ two's complement) before limitation. If the value of this bit exceeds the limits defined by bits FLXAnFRGTUC10.MRC[10:0], flag FLXAnFRSFS.RCLR is set to 1.

Reset when leaving CONFIG state or when entering STARTUP state.

CAUTION

The external rate correction value is added to the limited rate correction value.

18.2.7.6 FLXAnFROCV — FlexRay Offset Correction Value Register

Access: This register can only be read in 8-, 16-, or 32-bit units.

Address: <FLXn_base> + $011C_H$

Value after reset: $0000\ 0000_H$

Bit	31	30	29	28	27	26	25	24	23	22	21	20	19	18	17	16
	—	—	—	—	—	—	—	—	—	—	—	—	—	OCV[18:16]		
Value after reset	0	0	0	0	0	0	0	0	0	0	0	0	0	0	0	0
R/W	R	R	R	R	R	R	R	R	R	R	R	R	R	R	R	R

Bit	15	14	13	12	11	10	9	8	7	6	5	4	3	2	1	0
	OCV[15:0]															
Value after reset	0	0	0	0	0	0	0	0	0	0	0	0	0	0	0	0
R/W	R	R	R	R	R	R	R	R	R	R	R	R	R	R	R	R

Table 18.51 FLXAnFROCV Register Contents

Bit Position	Bit Name	Function
31 to 19	Reserved	When read, the value after reset is read.
18 to 0	OCV[18:0]	Offset Correction Value Flag Indicates vOffsetCorrection

(1) FLXAnFROCV.OCV

Offset Correction Value Flag

Indicates offset correction value (vOffsetCorrection/ two's complement) before limitation. If the value of this bit exceeds the limits defined by bits FLXAnFRGTUC10.MOC[10:0], flag FLXAnFRSFS.OCLR is set to 1.

Reset when leaving CONFIG state or when entering STARTUP state.

CAUTION

The external offset correction value is added to the limited offset correction value.

18.2.7.7 FLXAnFRSFS — FlexRay Sync Frame Status Register

Access: This register can only be read in 8-, 16-, or 32-bit units.

Address: <FLXn_base> + 0120_H

Value after reset: $0000\ 0000_H$

Bit	31	30	29	28	27	26	25	24	23	22	21	20	19	18	17	16
	—	—	—	—	—	—	—	—	—	—	—	—	RCLR	MRCS	OCLR	MOCS
Value after reset	0	0	0	0	0	0	0	0	0	0	0	0	0	0	0	0
R/W	R	R	R	R	R	R	R	R	R	R	R	R	R	R	R	R

Bit	15	14	13	12	11	10	9	8	7	6	5	4	3	2	1	0
	VSBO[3:0]				VSBE[3:0]				VSAO[3:0]				VSAE[3:0]			
Value after reset	0	0	0	0	0	0	0	0	0	0	0	0	0	0	0	0
R/W	R	R	R	R	R	R	R	R	R	R	R	R	R	R	R	R

Table 18.52 FLXAnFRSFS Register Contents

Bit Position	Bit Name	Function
31 to 20	Reserved	When read, the value after reset is read.
19	RCLR	Rate Correction Limit Reached Flag 0: Rate correction below limit 1: Rate correction limit reached
18	MRCS	Missing Rate Correction Signal Flag 0: Rate correction signal valid 1: Missing rate correction signal
17	OCLR	Offset Correction Limit Reached Flag 0: Offset correction below limit 1: Offset correction limit reached
16	MOCS	Missing Offset Correction Signal Flag 0: Offset correction signal valid 1: Missing offset correction signal
15 to 12	VSBO[3:0]	Valid Sync Frames Channel B, odd communication cycle
11 to 8	VSBE[3:0]	Valid Sync Frames Channel B, even communication cycle
7 to 4	VSAO[3:0]	Valid Sync Frames Channel A, odd communication cycle
3 to 0	VSAE[3:0]	Valid Sync Frames Channel A, even communication cycle

(1) FLXAnFRSFS.RCLR

Rate Correction Limit Reached Flag

The Rate Correction Limit Reached flag signals to the Host, that the rate correction value has exceeded its limit as defined by bits FLXAnFRGTUC10.MRC[10:0]. The flag is updated by the CC at start of offset correction phase.

Reset when leaving CONFIG state or when entering STARTUP state, INTEGRATION_COLDSTART_CHECK state or INTEGRATION_CONSISTENCY_CHECK state.

(2) FLXAnFRSFS.MRCS

Missing Rate Correction Signal Flag

The Missing Rate Correction flag signals to the Host, that no rate correction calculation can be performed because no pairs of even / odd sync frames were received. The flag is updated by the CC at start of offset correction phase.

Reset when leaving CONFIG state or when entering STARTUP state, INTEGRATION_COLDSTART_CHECK state or INTEGRATION_CONSISTENCY_CHECK state.

(3) FLXAnFRSFS.OCLR

Offset Correction Limit Reached Flag

The Offset Correction Limit Reached flag signals to the Host, that the offset correction value has exceeded its limit as defined by bits FLXAnFRGTUC10.MOC[10:0]. The flag is updated by the CC at start of offset correction phase.

Reset when leaving CONFIG state or when entering STARTUP state, INTEGRATION_COLDSTART_CHECK state or INTEGRATION_CONSISTENCY_CHECK state.

(4) FLXAnFRSFS.MOCS

Missing Offset Correction Signal Flag

The Missing Offset Correction flag signals to the Host, that no offset correction calculation can be performed because no sync frames were received. The flag is updated by the CC at start of offset correction phase.

Reset when leaving CONFIG state or when entering STARTUP state, INTEGRATION_COLDSTART_CHECK state or INTEGRATION_CONSISTENCY_CHECK state.

(5) FLXAnFRSFS.VSBO

Valid Sync Frames Channel B, odd communication cycle

These bits are only valid when bit FLXAnFRSUCC1.CCHB is 1.

Holds the number of valid sync frames received on channel B in the odd communication cycle. If transmission of sync frames is enabled by bit FLXAnFRSUCC1.TXSY the value is incremented by one. The value is updated during the NIT of each odd communication cycle.

Reset when leaving CONFIG state or when entering STARTUP state, INTEGRATION_COLDSTART_CHECK state or INTEGRATION_CONSISTENCY_CHECK state.

(6) FLXAnFRSFS.VSBE

Valid Sync Frames Channel B, even communication cycle

These bits are only valid when bit FLXAnFRSUCC1.CCHB is 1.

Holds the number of valid sync frames received on channel B in the even communication cycle. If transmission of sync frames is enabled by bit FLXAnFRSUCC1.TXSY the value is incremented by one. The value is updated during the NIT of each even communication cycle.

Reset when leaving CONFIG state or when entering STARTUP state, INTEGRATION_COLDSTART_CHECK state or INTEGRATION_CONSISTENCY_CHECK state.

(7) FLXAnFRSFS.VSAO

Valid Sync Frames Channel A, odd communication cycle

These bits are only valid when bit FLXAnFRSUCC1.CCHA is 1.

Holds the number of valid sync frames received on channel A in the odd communication cycle. If transmission of sync frames is enabled by bit FLXAnFRSUCC1.TXSY the value is incremented by one. The value is updated during the NIT of each odd communication cycle.

Reset when leaving CONFIG state or when entering STARTUP state, INTEGRATION_COLDSTART_CHECK state or INTEGRATION_CONSISTENCY_CHECK state.

(8) FLXAnFRSFS.VSAE

Valid Sync Frames Channel A, even communication cycle

These bits are only valid when bit FLXAnFRSUCC1.CCHA is 1.

Holds the number of valid sync frames received on channel A in the even communication cycle. If transmission of sync frames is enabled by bit FLXAnFRSUCC1.TXSY, the value is incremented by one. The value is updated during the NIT of each even communication cycle.

Reset when leaving CONFIG state or when entering STARTUP state, INTEGRATION_COLDSTART_CHECK state or INTEGRATION_CONSISTENCY_CHECK state.

18.2.7.8 FLXAnFRSWNIT — FlexRay Symbol Window and NIT Status Register

Symbol window related status information is updated by the CC at the end of the symbol window for each channel. NIT related status information is updated by the CC at the end of the NIT for each channel.

During startup the status data is not updated.

Access: This register can only be read in 8-, 16-, or 32-bit units.

Address: <FLXn_base> + 0124_H

Value after reset: $0000\ 0000_H$

Bit	31	30	29	28	27	26	25	24	23	22	21	20	19	18	17	16
	—	—	—	—	—	—	—	—	—	—	—	—	—	—	—	—
Value after reset	0	0	0	0	0	0	0	0	0	0	0	0	0	0	0	0
R/W	R	R	R	R	R	R	R	R	R	R	R	R	R	R	R	R

Bit	15	14	13	12	11	10	9	8	7	6	5	4	3	2	1	0
	—	—	—	—	SBNB	SENB	SBNA	SENA	MTSB	MTSA	TCSB	SBSB	SESB	TCSA	SBSA	SESA
Value after reset	0	0	0	0	0	0	0	0	0	0	0	0	0	0	0	0
R/W	R	R	R	R	R	R	R	R	R	R	R	R	R	R	R	R

Table 18.53 FLXAnFRSWNIT Register Contents (1/2)

Bit	Symbol	Function
31 to 12	Reserved	When read, the value after reset is read.
11	SBNB	Slot Boundary Violation during NIT Channel B Flag 0: No slot boundary violation detected 1: Slot boundary violation during NIT detected on channel B
10	SENB	Syntax Error during NIT Channel B Flag 0: No syntax error detected 1: Syntax error during NIT detected on channel B
9	SBNA	Slot Boundary Violation during NIT Channel A Flag 0: No slot boundary violation detected 1: Slot boundary violation during NIT detected on channel A
8	SENA	Syntax Error during NIT Channel A Flag 0: No syntax error detected 1: Syntax error during NIT detected on channel A
7	MTSB	MTS Received on Channel B Flag 0: No MTS symbol received on channel B 1: MTS symbol received on channel B
6	MTSA	MTS Received on Channel A Flag 0: No MTS symbol received on channel A 1: MTS symbol received on channel A
5	TCSB	Transmission Conflict in Symbol Window Channel B Flag 0: No transmission conflict detected 1: Transmission conflict in symbol window detected on channel B
4	SBSB	Slot Boundary Violation in Symbol Window Channel B Flag 0: No slot boundary violation detected 1: Slot boundary violation during symbol window detected on channel B
3	SESB	Syntax Error in Symbol Window Channel B Flag 0: No syntax error detected 1: Syntax error during symbol window detected on channel B

Table 18.53 FLXAnFRSWNIT Register Contents (2/2)

Bit	Symbol	Function
2	TCSA	Transmission Conflict in Symbol Window Channel A Flag 0: No transmission conflict detected 1: Transmission conflict in symbol window detected on channel A
1	SBSA	Slot Boundary Violation in Symbol Window Channel A Flag 0: No slot boundary violation detected 1: Slot boundary violation during symbol window detected on channel A
0	SESA	Syntax Error in Symbol Window Channel A Flag 0: No syntax error detected 1: Syntax error during symbol window detected on channel A

(1) FLXAnFRSWNIT.SBNB

Indicates a Slot Boundary Violation during NIT Channel B Flag (vSS!BViolationB).

Reset when leaving CONFIG state or when entering STARTUP state.

(2) FLXAnFRSWNIT.SENB

Indicates a Syntax Error during NIT Channel B Flag (vSS!SyntaxErrorB).

Reset when leaving CONFIG state or when entering STARTUP state.

(3) FLXAnFRSWNIT.SBNA

Indicates a Slot Boundary Violation during NIT Channel A Flag (vSS!BViolationA).

Reset when leaving CONFIG state or when entering STARTUP state.

(4) FLXAnFRSWNIT.SENA

Indicates a Syntax Error during NIT Channel A Flag (vSS!SyntaxErrorA).

Reset when leaving CONFIG state or when entering STARTUP state.

(5) FLXAnFRSWNIT.MTSB

Indicates a MTS Received on Channel B Flag (vSS!ValidMTSB).

Media Access Test symbol received on channel B during the preceding symbol window. Updated by the CC for each channel at the end of the symbol window.

When this bit is set to 1, also bit FLXAnFRSIR.MTSB is set to 1.

Reset when leaving CONFIG state or when entering STARTUP state.

(6) FLXAnFRSWNIT.MTSA

Indicates a MTS Received on Channel A Flag (vSS!ValidMTSA).

Media Access Test symbol received on channel A during the preceding symbol window. Updated by the CC for each channel at the end of the symbol window.

When this bit is set to 1, also bit FLXAnFRSIR.MTSA is set to 1.

Reset when leaving CONFIG state or when entering STARTUP state.

(7) FLXAnFRSWNIT.TCSB

Indicates a Transmission Conflict in Symbol Window Channel B Flag (vSS!TxConflictB).

Reset when leaving CONFIG state or when entering STARTUP state.

(8) FLXAnFRSWNIT.SBSB

Indicates a Slot Boundary Violation in Symbol Window Channel B Flag (vSS!BViolationB).

Reset when leaving CONFIG state or when entering STARTUP state.

(9) FLXAnFRSWNIT.SESB

Indicates a Syntax Error in Symbol Window Channel B Flag (vSS!SyntaxErrorB).

Reset when leaving CONFIG state or when entering STARTUP state.

(10) FLXAnFRSWNIT.TCSA

Indicates a Transmission Conflict in Symbol Window Channel A Flag (vSS!TxConflictA).

Reset when leaving CONFIG state or when entering STARTUP state.

(11) FLXAnFRSWNIT.SBSA

Indicates a Slot Boundary Violation in Symbol Window Channel A Flag (vSS!BViolationA).

Reset when leaving CONFIG state or when entering STARTUP state.

(12) FLXAnFRSWNIT.SESA

Indicates a Syntax Error in Symbol Window Channel A Flag (vSS!SyntaxErrorA).

Reset when leaving CONFIG state or when entering STARTUP state.

18.2.7.9 FLXAnFRACS — FlexRay Aggregated Channel Status Register

The aggregated channel status provides the Host with an accrued status of channel activity for all communication slots regardless of whether they are assigned for transmission or subscribed for reception.

The aggregated channel status also includes status data from the symbol window and the network idle time.

The status data is updated (set) after each slot and aggregated until it is reset by the Host.

During startup the status data is not updated.

Access: This register can be read/written in 8-, 16-, or 32-bit units.

Address: <FLXn_base> + 0128_H

Value after reset: $0000\ 0000_H$

Bit	31	30	29	28	27	26	25	24	23	22	21	20	19	18	17	16
	—	—	—	—	—	—	—	—	—	—	—	—	—	—	—	—
Value after reset	0	0	0	0	0	0	0	0	0	0	0	0	0	0	0	0
R/W	R	R	R	R	R	R	R	R	R	R	R	R	R	R	R	R

Bit	15	14	13	12	11	10	9	8	7	6	5	4	3	2	1	0
	—	—	—	SBVB	CIB	CEDB	SEDB	VFRB	—	—	—	SBVA	CIA	CEDA	SEDA	VFRA
Value after reset	0	0	0	0	0	0	0	0	0	0	0	0	0	0	0	0
R/W	R	R	R	R/W	R/W	R/W	R/W	R/W	R	R	R	R/W	R/W	R/W	R/W	R/W

Table 18.54 FLXAnFRACS Register Contents (1/2)

Bit Position	Bit Name	Function
31 to 13	Reserved	When read, the value after reset is read. When writing, write the value after reset.
12	SBVB	Slot Boundary Violation on Channel B Flag 0: No slot boundary violation observed 1: Slot boundary violation(s) observed on channel B
11	CIB	Communication Indicator Channel B Flag 0: No valid frame(s) received in slots containing any additional communication 1: Valid frame(s) received on channel B in slots containing any additional communication
10	CEDB	Content Error Detected on Channel B Flag 0: No frame with content error received 1: Frame(s) with content error received on channel B
9	SEDB	Syntax Error Detected on Channel B Flag 0: No syntax error observed 1: Syntax error(s) observed on channel B
8	VFRB	Valid Frame Received on Channel B Flag 0: No valid frame received 1: Valid frame(s) received on channel B
7 to 5	Reserved	When read, the value after reset is read. When writing, write the value after reset.
4	SBVA	Slot Boundary Violation on Channel A Flag 0: No slot boundary violation observed 1: Slot boundary violation(s) observed on channel A

Table 18.54 FLXAnFRACS Register Contents (2/2)

Bit Position	Bit Name	Function
3	CIA	Communication Indicator Channel A Flag 0: No valid frame(s) received in slots containing any additional communication 1: Valid frame(s) received on channel A in slots containing any additional communication
2	CEDA	Content Error Detected on Channel A Flag 0: No frame with content error received 1: Frame(s) with content error received on channel A
1	SEDA	Syntax Error Detected on Channel A Flag 0: No syntax error observed 1: Syntax error(s) observed on channel A
0	VFRA	Valid Frame Received on Channel A Flag 0: No valid frame received 1: Valid frame(s) received on channel A

(1) FLXAnFRACS.SBVB

Slot Boundary Violation on Channel B Flag

Writing 0 has no effect on the bit value.

This bit is cleared when writing a 1 to it.

One or more slot boundary violations were observed on channel B at any time during the observation period (static or dynamic slots, symbol window, and NIT).

When this flag changes from 0 to 1, bit FLXAnFREIR.EDB is set to 1.

Reset when leaving CONFIG state or when entering STARTUP state.

(2) FLXAnFRACS.CIB

Communication Indicator Channel B Flag

Writing 0 has no effect on the bit value.

This bit is cleared when writing a 1 to it.

One or more valid frames were received on channel B in slots that also contained any additional communication during the observation period, i.e. one or more slots received a valid frame AND had When any combination of either syntax error OR content error OR slot boundary violation.

When this flag changes from 0 to 1, bit FLXAnFREIR.EDB is set to 1.

Reset when leaving CONFIG state or when entering STARTUP state.

The FLXAnFRACS.CIB flag is also set when the slot boundary at the end of the slot is reached during the channel idle recognition phase while there is only a single frame in the slot.

(3) FLXAnFRACS.CEDB

Content Error Detected on Channel B Flag

Writing 0 has no effect on the bit value.

This bit is cleared when writing a 1 to it.

One or more frames with a content error were received on channel B in any static or dynamic slot during the observation period.

When this flag changes from 0 to 1, bit FLXAnFREIR.EDB is set to 1.

Reset when leaving CONFIG state or when entering STARTUP state.

(4) FLXAnFRACS.SEDB

Syntax Error Detected on Channel B Flag

Writing 0 has no effect on the bit value.

This bit is cleared when writing a 1 to it.

One or more syntax errors in static or dynamic slots, symbol window, and NIT were observed on channel B.

When this flag changes from 0 to 1, bit FLXAnFREIR.EDB is set to 1.

Reset when leaving CONFIG state or when entering STARTUP state.

(5) FLXAnFRACS.VFRB

Valid Frame Received on Channel B Flag

Writing 0 has no effect on the bit value.

This bit is cleared when writing a 1 to it.

One or more valid frames were received on channel B in any static or dynamic slot during the observation period.

Reset when leaving CONFIG state or when entering STARTUP state.

(6) FLXAnFRACS.SBVA

Slot Boundary Violation on Channel A Flag

Writing 0 has no effect on the bit value.

This bit is cleared when writing a 1 to it.

Slot boundary violations were observed on channel A at any time during the observation period (static or dynamic slots, symbol window, and NIT).

When this flag changes from 0 to 1, bit FLXAnFREIR.EDA is set to 1.

Reset when leaving CONFIG state or when entering STARTUP state.

(7) FLXAnFRACS.CIA

Communication Indicator Channel A Flag

Writing 0 has no effect on the bit value.

This bit is cleared when writing a 1 to it.

One or more valid frames were received on channel A in slots that also contained any additional communication during the observation period, i.e. one or more slots received a valid frame AND had any combination of either syntax error OR content error OR slot boundary violation.

When this flag changes from 0 to 1, the FLXAnFREIR.EDA bit is set to 1.

Reset when leaving CONFIG state or when entering STARTUP state.

The FLXAnFRACS.CIB flag is also set when the slot boundary at the end of the slot is reached during the channel idle recognition phase while there is only a single frame in the slot.

(8) FLXAnFRACS.CEDA

Content Error Detected on Channel A Flag

Writing 0 has no effect on the bit value.

This bit is cleared when writing a 1 to it.

One or more frames with a content error were received on channel A in any static or dynamic slot during the observation period.

When this flag changes from 0 to 1, bit FLXAnFREIR.EDA is set to 1.

Reset when leaving CONFIG state or when entering STARTUP state.

(9) FLXAnFRACS.SEDA

Syntax Error Detected on Channel A Flag

Writing 0 has no effect on the bit value.

This bit is cleared when writing a 1 to it.

One or more syntax errors in static or dynamic slots, symbol window, and NIT were observed on channel A.

When this flag changes from 0 to 1, bit FLXAnFREIR.EDA is set to 1.

Reset when leaving CONFIG state or when entering STARTUP state.

(10) FLXAnFRACS.VFRA

Valid Frame Received on Channel A Flag

Writing 0 has no effect on the bit value.

This bit is cleared when writing a 1 to it.

One or more valid frames were received on channel A in any static or dynamic slot during the observation period.

Reset when leaving CONFIG state or when entering STARTUP state.

18.2.7.10 FLXAnFRESIDm — FlexRay Even Sync ID Register m (m = 1 to 15)

Registers FLXAnFRESID1 to FLXAnFRESID15 hold the frame IDs of the sync frames received in even communication cycles used for clock synchronisation up to the limit of gSyncNodeMax. The values are sorted in ascending order, with register FLXAnFRESID1 holding the lowest received sync frame ID. If the node itself transmits a sync frame in an even communication cycle, register FLXAnFRESID1 holds the respective sync frame ID as configured in message buffer 0 and flags FLXAnFRESID1.RXEA, FLXAnFRESID1.RXEB are set. The value is updated during the NIT of each even communication cycle.

Access: This register can only be read in 8-, 16-, or 32-bit units.

Address: <FLXn_base> + 0130_H to <FLXn_base> + 0168_H (<FLXn_base> + 0130_H+(n-1)*4)

Value after reset: $0000\ 0000_H$

Bit	31	30	29	28	27	26	25	24	23	22	21	20	19	18	17	16
	—	—	—	—	—	—	—	—	—	—	—	—	—	—	—	—
Value after reset	0	0	0	0	0	0	0	0	0	0	0	0	0	0	0	0
R/W	R	R	R	R	R	R	R	R	R	R	R	R	R	R	R	R

Bit	15	14	13	12	11	10	9	8	7	6	5	4	3	2	1	0
	RXEB	RXEA	—	—	—	—	EID[9:0]									
Value after reset	0	0	0	0	0	0	0	0	0	0	0	0	0	0	0	0
R/W	R	R	R	R	R	R	R	R	R	R	R	R	R	R	R	R

Table 18.55 FLXAnFRESIDn (n=1 to 15) Register Contents

Bit Position	Bit Name	Function
31 to 16	Reserved	When read, the value after reset is read.
15	RXEB	Received / Configured Even Sync ID on Channel B Flag 0: No sync frame received on channel B / node not configured to transmit sync frames 1: Sync frame received on channel B / node configured to transmit sync frames
14	RXEA	Received / Configured Even Sync ID on Channel A Flag 0: No sync frame received on channel A / node not configured to transmit sync frames 1: Sync frame received on channel A / node configured to transmit sync frames
13 to 10	Reserved	When read, the value after reset is read.
9 to 0	EID[9:0]	Even Sync ID (vsSyncIDListA,B even) Flag

(1) FLXAnFRESIDn.RXEB

Received / Configured Even Sync ID on Channel B Flag

Signals that a sync frame corresponding to the stored even sync ID was received on channel B or that the node is configured to be a sync node with key slot = bits FLXAnFRESID1.EID[9:0].

Reset when leaving CONFIG state or when entering STARTUP state.

(2) FLXAnFRESIDn.RXEA

Received / Configured Even Sync ID on Channel A Flag

Signals that a sync frame corresponding to the stored even sync ID was received on channel A or that the node is configured to be a sync node with key slot = bits FLXAnFRESID1.EID[9:0].

Reset when leaving CONFIG state or when entering STARTUP state.

(3) FLXAnFRESIDn.EID

Even Sync ID Flag (vsSyncIDListA,B even)

Sync frame ID even communication cycle.

Reset when leaving CONFIG state or when entering STARTUP state.

18.2.7.11 FLXAnFROSIDm — FlexRay Odd Sync ID Register m (m = 1 to 15)

Registers FLXAnFROSID1 to FLXAnFROSID15 hold the frame IDs of the sync frames received in odd communication cycles used for clock synchronisation up to the limit of gSyncNodeMax. The values are sorted in ascending order, with register FLXAnFROSID1 holding the lowest received sync frame ID. If the node itself transmits a sync frame in an odd communication cycle, register FLXAnFROSID1 holds the respective sync frame ID as configured in message buffer 0 and flags FLXAnFROSID1.RXOA, FLXAnFROSID1.RXOB are set. The value is updated during the NIT of each odd communication cycle.

Access: This register can only be read in 8-, 16-, or 32-bit units.

Address: <FLXn_base> + 0170_H to <FLXn_base> + $01A8_H$ (<FLXn_base> + 0170_H+ (n-1)*4)

Value after reset: $0000\ 0000_H$

Bit	31	30	29	28	27	26	25	24	23	22	21	20	19	18	17	16
	—	—	—	—	—	—	—	—	—	—	—	—	—	—	—	—
Value after reset	0	0	0	0	0	0	0	0	0	0	0	0	0	0	0	0
R/W	R	R	R	R	R	R	R	R	R	R	R	R	R	R	R	R

Bit	15	14	13	12	11	10	9	8	7	6	5	4	3	2	1	0
	RXOB	RXOA	—	—	—	—	OID[9:0]									
Value after reset	0	0	0	0	0	0	0	0	0	0	0	0	0	0	0	0
R/W	R	R	R	R	R	R	R	R	R	R	R	R	R	R	R	R

Table 18.56 FLXAnFROSIDn Register Contents

Bit Position	Bit Name	Function
31 to 16	Reserved	When read, the value after reset is read.
15	RXOB	Received / Configured Odd Sync ID on Channel B Flag 0: No sync frame received on channel B / node not configured to transmit sync frames 1: Sync frame received on channel B / node configured to transmit sync frames
14	RXOA	Received / Configured Odd Sync ID on Channel A Flag 0: No sync frame received on channel A / node not configured to transmit sync frames 1: Sync frame received on channel A / node configured to transmit sync frames
13 to 10	Reserved	When read, the value after reset is read.
9 to 0	OID[9:0]	Odd Sync ID Flag (vsSyncIDListA,B odd)

(1) FLXAnFROSIDn.RXOB

Received / Configured Odd Sync ID on Channel B Flag

Signals that a sync frame corresponding to the stored odd sync ID was received on channel B or that the node is configured to be a sync node with key slot = bits FLXAnFROSID1.OID[9:0].

Reset when leaving CONFIG state or when entering STARTUP state.

(2) FLXAnFROSIDn.RXOA

Received / Configured Odd Sync ID on Channel A Flag

Signals that a sync frame corresponding to the stored odd sync ID was received on channel A or that the node is configured to be a sync node with key slot = bits FLXAnFROSID1.OID[9:0].

Reset when leaving CONFIG state or when entering STARTUP state.

(3) FLXAnFROSIDn.OID

Odd Sync ID Flag (vsSyncIDListA,B odd)

Sync frame ID odd communication cycle.

Reset when leaving CONFIG state or when entering STARTUP state.

18.2.7.12 FLXAnFRNMVm — FlexRay Network Management Vector Register m (m = 1 to 3)

The three network management registers hold the accrued NM vector (see **Section 18.3.7, Network Management**).

The CC updates the NM vector at the end of each communication cycle as long as the CC is either in NORMAL_ACTIVE or NORMAL_PASSIVE state.

FLXAnFRNMVm-bytes exceeding the configured NM vector length are not valid.

Access: This register can only be read in 8-, 16-, or 32-bit units.

Address: <FLXn_base> + $01B0_H$ to <FLXn_base> + $01B8_H$ (<FLXn_base> + $01B0_H$ + (m-1)*4)

Value after reset: $0000\ 0000_H$

Bit	31	30	29	28	27	26	25	24	23	22	21	20	19	18	17	16
	NM[31:16]															
Value after reset	0	0	0	0	0	0	0	0	0	0	0	0	0	0	0	0
R/W	R	R	R	R	R	R	R	R	R	R	R	R	R	R	R	R

Bit	15	14	13	12	11	10	9	8	7	6	5	4	3	2	1	0
	NM[15:0]															
Value after reset	0	0	0	0	0	0	0	0	0	0	0	0	0	0	0	0
R/W	R	R	R	R	R	R	R	R	R	R	R	R	R	R	R	R

Table 18.57 FLXAnFRNMVn Register Contents

Bit Position	Bit Name	Function
31 to 0	NM[31:0]	NM Vector

(1) FLXAnFRNMVm.NM

NM Vector

The three network management vector registers hold the accrued NM vector (configurable 0 to 12 bytes). The NM vector to be held is generated by bit-wise logic OR for each NM vector received on each channel (valid static frames with PPI = 1) (see **Section 18.3.7, Network Management**).

FLXAnFRNMVm-bytes exceeding the configured NM vector length are not valid.

The Register Contents are updated at the end of each communication cycle as long as the CC is either in NORMAL_ACTIVE or NORMAL_PASSIVE state.

These bits are cleared when leaving CONFIG state or when entering STARTUP state.

18.2.8 Message Buffer Control Registers

18.2.8.1 FLXAnFRMRC — FlexRay Message RAM Configuration Register

The Message RAM Configuration register defines the number of message buffers assigned to the static segment, dynamic segment, and FIFO.

The Message RAM can be divided into up three different areas; Static Buffer area, Static and Dynamic Buffer area, FIFO area. If present, the Static Buffer area is starting at Message Buffer 0.

The start of the Static and Dynamic Buffer area is configured by bits FLXAnFRMRC.FDB[7:0]. Bits FLXAnFRMRC.FDB[7:0] define the end of the Static Buffer area. If no Static Buffer area is present, the Static and Dynamic Buffer area starts at Message Buffer 0.

The start of the FIFO area is configured by bits FLXAnFRMRC.FFB[7:0]. Bits FLXAnFRMRC.FFB[7:0] define the end of the previous area, which can be either the Static Buffer area or the Static and Dynamic Buffer area. If no Static Buffer area and no Static and Dynamic Buffer area is present, the FIFO area starts at Message Buffer 0.

With bits FLXAnFRMRC.LCB[7:0], the end of the last configured area is configured which can be the Static Buffer area, the Static and Dynamic Buffer area or the FIFO area.

Figure 18.2 shows an example configuration of the Message RAM where all there area are configured.

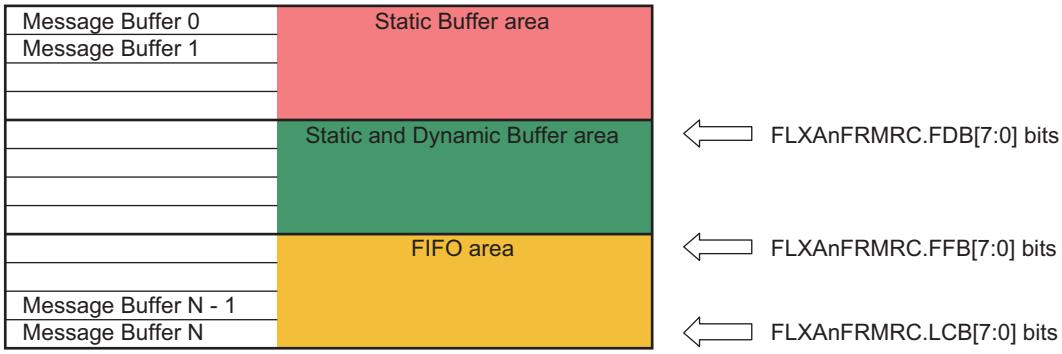

Figure 18.2 Message RAM Organization

CAUTIONS

1. **In case the node is configured as sync node (bit FLXAnFRSUCC1.TXSY = 1) or for single slot mode operation (bit FLXAnFRSUCC1.TSM = 1), message buffer 0 resp. 1 is reserved for sync frames or single slot frames and have to be configured with the node-specific key slot ID. In case the node is neither configured as sync node nor for single slot operation message buffer 0 resp. 1 is treated like all other message buffers.**
2. **The maximum number of header sections is 128. This means a maximum of 128 message buffers can be configured. The maximum length of a data section is 254 bytes. The length of the data section may be configured differently for each message buffer. For details see Section 18.3.13, Message RAM.**
3. **In case two or more message buffers are assigned to slot 1 by use of cycle filtering, all of them must be located either in the "Static Buffers" or at the beginning of the "Static + Dynamic Buffers" section.**

4. **The FlexRay protocol specification requires that each node has to send a frame in its key slot. Therefore at least message buffer 0 is reserved for transmission in the key slot. Due to this requirement a maximum number of 127 message buffers can be assigned to the FIFO. Nevertheless, a non protocol conform configuration without a transmission slot in the static segment would still be operational.**
5. **The payload length configured and the length of the data section need to be configured identical for all message buffers belonging to the FIFO via the FLXAnFRWRHS2.PLC[6:0] and FLXAnFRWRHS3.DP[6:0] bits. When the CC is not in DEFAULT_CONFIG or CONFIG state reconfiguration of message buffers belonging to the FIFO is locked.**

Access: This register can be read/written in 8-, 16-, or 32-bit units.

Address: <FLXn_base> + 0300_H

Value after reset: $0180\ 0000_H$

Bit	31	30	29	28	27	26	25	24	23	22	21	20	19	18	17	16
	—	—	—	—	—	SPLM	SEC[1:0]		LCB[7:0]							
Value after reset	0	0	0	0	0	0	0	1	1	0	0	0	0	0	0	0
R/W	R	R	R	R	R	R/W	R/W	R/W	R/W	R/W	R/W	R/W	R/W	R/W	R/W	R/W

Bit	15	14	13	12	11	10	9	8	7	6	5	4	3	2	1	0
	FFB[7:0]								FDB[7:0]							
Value after reset	0	0	0	0	0	0	0	0	0	0	0	0	0	0	0	0
R/W	R/W	R/W	R/W	R/W	R/W	R/W	R/W	R/W	R/W	R/W	R/W	R/W	R/W	R/W	R/W	R/W

Table 18.58 FLXAnFRMRC Register Contents

Bit Position	Bit Name	Function
31 to 27	Reserved	When read, the value after reset is read. When writing, write the value after reset.
26	SPLM	Sync Frame Payload Multiplex Bit 0: Only message buffer 0 locked against reconfiguration 1: Both message buffers 0 and 1 are locked against reconfiguration
25, 24	SEC[1:0]	Secure Buffers Bit 00: all buffers unlocked 01: static buffers locked, FIFO locked, limited transmission 10: all buffers locked 11: all buffers locked, limited transmission
23 to 16	LCB[7:0]	Last Configured Buffer Bit 0 to 127: Number of message buffers is FLXAnFRMRF.LCB + 1 128: No message buffer assigned to the FIFO
15 to 8	FFB[7:0]	First Buffer of FIFO Bit 0: All message buffers assigned to the FIFO 1 to 127: Message buffers from FLXAnFRMRC.FFB to FLXAnFRMRC.LCB assigned to the FIFO 128: No message buffer configured
7 to 0	FDB[7:0]	First Dynamic Buffer Bit 0: No group of message buffers exclusively for the static segment configured 1 to 127: Message buffers 0 to FLXAnFRMRC.FDB - 1 reserved for static segment 128: No dynamic message buffers configured

(1) FLXAnFRMRC.SPLM

Sync Frame Payload Multiplex Bit

The user can only write to these bits when FLXAnFRCCSV.POCS is DEFAULT_CONFIG or CONFIG.

This bit is only evaluated if the node is configured as sync node (bit FLXAnFRSUCC1.TXSY = 1) or for single slot mode operation (bit FLXAnFRSUCC1.TSM = 1).

When this bit is set to 1 message buffers 0 and 1 are dedicated for sync frame transmission with different payload data on channel A and B.

When this bit is set to 0, sync frames are transmitted from message buffer 0 with the same payload data on all channels configured. Note that the channel filter configuration for message buffer 0 resp. message buffer 1 has to be chosen according to this bit setting.

(2) FLXAnFRMRC.SEC

Secure Buffers Bit

The user can only write to these bits when bits FLXAnFRCCSV.POCS[5:0] are DEFAULT_CONFIG or CONFIG.

Not evaluated when the CC is in DEFAULT_CONFIG or CONFIG state.

For temporary unlocking, see **Section 18.3.13.4, Host Handling of Access Errors**.

00_B = all buffers unlocked

Reconfiguration of message buffers enabled with numbers < FLXAnFRMRC.FFB enabled

Exception: In nodes configured for sync frame transmission or for single slot mode operation message buffer 0 (and if bit FLXAnFRMRC.SPLM = 1, also message buffer 1) is always locked

01_B = static buffers locked, FIFO locked, limited transmission

Reconfiguration of message buffers with numbers < FLXAnFRMRC.FDB and with numbers ≥ FLXAnFRMRC.FFB locked and transmission of message buffers for static segment with numbers ≥ FLXAnFRMRC.FDB disabled

10_B = all buffers locked

Reconfiguration of all message buffers locked

11_B = all buffers locked, limited transmission

Reconfiguration of all message buffers locked and transmission of message buffers for static segment with numbers ≥ FLXAnFRMRC.FDB disabled

(3) FLXAnFRMRC.LCB

Last Configured Buffer Bit

The user can only write to these bits when bits FLXAnFRCCSV.POCS[5:0] are DEFAULT_CONFIG or CONFIG.

When a Static and Dynamic Buffer area is configured (bits FLXAnFRMRC.FDB[7:0] < 128), the user should configure FLXAnFRMRC.LCB ≥ FLXAnFRMRC.FDB.

When a FIFO area is configured (bits FLXAnFRMRC.FFB[7:0] < 128), the user should configure bits FLXAnFRMRC.LCB[7:0] ≥ bits FLXAnFRMRC.FFB[7:0].

(4) FLXAnFRMRC.FFB

First Buffer of FIFO Bit

The user can only write to these bits when bits FLXAnFRCCSV.POCS[5:0] are DEFAULT_CONFIG or CONFIG.

When a Static and Dynamic Buffer area is configured (bits FLXAnFRMRC.FDB[7:0] < 128), the user should configure bits FLXAnFRMRC.FFB[7:0] > bits FLXAnFRMRC.FDB[7:0].

(5) FLXAnFRMRC.FDB

First Dynamic Buffer Bit

The user can only write to these bits when bits FLXAnFRCCSV.POCS[5:0] are DEFAULT_CONFIG or CONFIG.

18.2.8.2 FLXAnFRFRF — FlexRay FIFO Rejection Filter Register

The FIFO Rejection Filter defines a user specified sequence of bits to which channel, frame ID, and cycle count of the incoming frames are compared. Together with the FIFO Rejection Filter Mask this register determines whether a message is rejected by the FIFO.

Access: This register can be read/written in 8-, 16-, or 32-bit units.

Address: <FLXn_base> + 0304_H

Value after reset: $0180\ 0000_H$

Bit	31	30	29	28	27	26	25	24	23	22	21	20	19	18	17	16
	—	—	—	—	—	—	—	RNF	RSS	CYF[6:0]						
Value after reset	0	0	0	0	0	0	0	1	1	0	0	0	0	0	0	0
R/W	R	R	R	R	R	R	R	R/W	R/W	R/W	R/W	R/W	R/W	R/W	R/W	R/W

Bit	15	14	13	12	11	10	9	8	7	6	5	4	3	2	1	0
	—	—	—	FID[10:0]											CH[1:0]	
Value after reset	0	0	0	0	0	0	0	0	0	0	0	0	0	0	0	0
R/W	R	R	R	R/W	R/W	R/W	R/W	R/W	R/W	R/W	R/W	R/W	R/W	R/W	R/W	R/W

Table 18.59 FLXAnFRFRF Register Contents

Bit Position	Bit Name	Function
31 to 25	Reserved	When read, the value after reset is read. When writing, write the value after reset.
24	RNF	Reject Null Frames Bit 0: Null frames are stored in the FIFO 1: Reject all null frames
23	RSS	Reject in Static Segment Bit 0: FIFO also used for static segment 1: Reject messages in static segment
22 to 16	CYF[6:0]	Cycle Counter Filter Bit
15 to 13	Reserved	When read, the value after reset is read. When writing, write the value after reset.
12 to 2	FID[10:0]	Frame ID Filter Bit 0 to 2047: Frame ID filter values
1, 0	CH[1:0]	Channel Filter Bit 00: receive on both channels 01: receive only on channel B 10: receive only on channel A 11: no reception

(1) FLXAnFRFRF.RNF

Reject Null Frames Bit

The user can only write to these bits when bits FLXAnFRCCSV.POCS[5:0] are DEFAULT_CONFIG or CONFIG.

If this bit is set to 1, received null frames are not stored in the FIFO.

(2) FLXAnFRFRF.RSS

Reject in Static Segment Bit

The user can only write to these bits when bits FLXAnFRCCSV.POCS[5:0] are DEFAULT_CONFIG or CONFIG.

If this bit is set to 1, the FIFO is used only for the dynamic segment.

(3) FLXAnFRFRF.CYF

Cycle Counter Filter Bit

The user can only write to these bits when bits FLXAnFRCCSV.POCS[5:0] are DEFAULT_CONFIG or CONFIG.

The 7-bit cycle counter filter determines the cycle set to which frame ID and channel rejection filter are applied. In cycles not belonging to the cycle set specified by FLXAnFRFRF.CYF, all frames are rejected. For details about the configuration of the cycle counter filter see **Section 18.3.8.2, Cycle Counter Filtering**.

(4) FLXAnFRFRF.FID

Frame ID Filter Bit

The user can only write to these bits when bits FLXAnFRCCSV.POCS[5:0] are DEFAULT_CONFIG or CONFIG.

Determines the frame ID to be rejected by the FIFO. With the additional configuration of register FLXAnFRFRFM, the corresponding frame ID filter bits are ignored, which results in further rejected frame IDs. When bits FLXAnFRFRFM.MFID[10:0] are zero, a frame ID filter value of zero means that no frame ID is rejected.

(5) FLXAnFRFRF.CH

Channel Filter Bit

The user can only write to these bits when bits FLXAnFRCCSV.POCS[5:0] are DEFAULT_CONFIG or CONFIG.

If reception on both channels is configured, also in static segment always both frames (from channel A and B) are stored in the FIFO, even if they are identical.

18.2.8.3 FLXAnFRFRFM — FlexRay FIFO Rejection Filter Mask Register

The FlexRay FIFO Rejection Filter Mask specifies which of the corresponding frame ID filter bits are relevant for rejection filtering. If a bit is set to 1, it indicates that the corresponding bit in the FLXAnFRFRF register will not be considered for rejection filtering.

Access: This register can be read/written in 8-, 16-, or 32-bit units.

Address: <FLXn_base> + 0308_H

Value after reset: $0000\ 0000_H$

Bit	31	30	29	28	27	26	25	24	23	22	21	20	19	18	17	16
	—	—	—	—	—	—	—	—	—	—	—	—	—	—	—	—
Value after reset	0	0	0	0	0	0	0	0	0	0	0	0	0	0	0	0
R/W	R	R	R	R	R	R	R	R	R	R	R	R	R	R	R	R

Bit	15	14	13	12	11	10	9	8	7	6	5	4	3	2	1	0
	—	—	—	MFID[10:0]											—	—
Value after reset	0	0	0	0	0	0	0	0	0	0	0	0	0	0	0	0
R/W	R	R	R	R/W	R/W	R/W	R/W	R/W	R/W	R/W	R/W	R/W	R/W	R/W	R	R

Table 18.60 FLXAnFRFRFM Register Contents

Bit Position	Bit Name	Function
31 to 13	Reserved	When read, the value after reset is read. When writing, write the value after reset.
12 to 2	MFID[10:0]	Mask Frame ID Filter Bit 0: Corresponding frame ID filter bit is used for rejection filtering 1: Ignore corresponding frame ID filter bit.
1, 0	Reserved	When read, the value after reset is read. When writing, write the value after reset.

(1) FLXAnFRFRFM.MFID

Mask Frame ID Filter Bit

The user can only write to these bits when bits FLXAnFRCCSV.POCS[5:0] are DEFAULT_CONFIG or CONFIG.

18.2.8.4 FLXAnFRFCL — FlexRay FIFO Critical Level Register

Access: This register can be read/written in 8-, 16-, or 32-bit units.

Address: <FLXn_base> + $030C_H$

Value after reset: $0000\ 0080_H$

Bit	31	30	29	28	27	26	25	24	23	22	21	20	19	18	17	16
	—	—	—	—	—	—	—	—	—	—	—	—	—	—	—	—
Value after reset	0	0	0	0	0	0	0	0	0	0	0	0	0	0	0	0
R/W	R	R	R	R	R	R	R	R	R	R	R	R	R	R	R	R

Bit	15	14	13	12	11	10	9	8	7	6	5	4	3	2	1	0
	—	—	—	—	—	—	—	—	CL[7:0]							
Value after reset	0	0	0	0	0	0	0	0	1	0	0	0	0	0	0	0
R/W	R	R	R	R	R	R	R	R	R/W	R/W	R/W	R/W	R/W	R/W	R/W	R/W

Table 18.61 FLXAnFRFCL Register Contents

Bit Position	Bit Name	Function
31 to 8	Reserved	When read, the value after reset is read. When writing, write the value after reset.
7 to 0	CL[7:0]	Critical Level Bit Critical Level

(1) FLXAnFRFCL.CL

Critical Level Bit

The user can only write to these bits when bits FLXAnFRCCSV.POCS[5:0] are DEFAULT_CONFIG or CONFIG.

When the receive FIFO fill level (bits FLXAnFRCCSV.POCS[5:0]) FLXAnFRFSR.RFFL is equal or greater than the critical level configured by bits FLXAnFRFCL.CL[7:0], the receive FIFO critical level flag FLXAnFRFSR.RFCL is set to 1.

If FLXAnFRFCL.CL is programmed to values > 128, bit FLXAnFRFSR.RFCL is never set to 1.

18.2.9 Message Buffer Status Registers

18.2.9.1 FLXAnFRMHDS — FlexRay Message Handler Status Register

Access: This register can be read/written in 8-, 16-, or 32-bit units.

Address: <FLXn_base> + 0310_H

Value after reset: $0000\ 0080_H$

Bit	31	30	29	28	27	26	25	24	23	22	21	20	19	18	17	16
	—	MBU[6:0]							—	MBT[6:0]						
Value after reset	0	0	0	0	0	0	0	0	0	0	0	0	0	0	0	0
R/W	R	R	R	R	R	R	R	R	R	R	R	R	R	R	R	R

Bit	15	14	13	12	11	10	9	8	7	6	5	4	3	2	1	0
	—	FMB[6:0]							CRAM	MFMB	FMBD	ATBF2	ATBF1	AMR	—	—
Value after reset	0	0	0	0	0	0	0	0	1	0	0	0	0	0	0	0
R/W	R	R	R	R	R	R	R	R	R	R/W	R/W	R/W	R/W	R/W	R	R

Table 18.62 FLXAnFRMHDS Register Contents

Bit Position	Bit Name	Function
31	Reserved	When read, the value after reset is read. When writing, write the value after reset.
30 to 24	MBU[6:0]	Message Buffer Updated Flag Message Buffer Updated
23	Reserved	When read, the value after reset is read. When writing, write the value after reset.
22 to 16	MBT[6:0]	Message Buffer Transmitted Flag Message Buffer Transmitted
15	Reserved	When read, the value after reset is read. When writing, write the value after reset.
8 to 14	FMB[6:0]	Faulty Message Buffer Number Flag
7	CRAM	Clear all internal RAM's Flag 0: No execution of the CHI command CLEAR_RAMS 1: Execution of the CHI command CLEAR_RAMS ongoing
6	MFMB	Multiple Faulty Message Buffer Detection Flag 0 = No additional faulty message buffer. 1 = Additional faulty message buffer was detected while the FMBD flag is set to 1.
5	FMBD	Faulty Message Buffer Detection Flag 0 = No faulty message buffer. 1 = Message buffer referenced by bit FLXAnFRMHDS.FMB holds faulty data with a parity error.
4	ATBF2	TBFRAM B Access Error Flag 0 = No access error 1 = Access error occurred when reading the RAM B.
3	ATBF1	TBFRAM A Access Error Flag 0 = No access error. 1 = Access error occurred when reading the RAM A.
2	AMR	Message RAM Access Error Flag 0 = No access error 1 = Access error occurred when reading the Message RAM.
1, 0	Reserved	When read, the value after reset is read. When writing, write the value after reset.

(1) FLXAnFRMHDS.MBU

Message Buffer Updated Flag

Number of message buffer that was updated last by the CC. For this message buffer the respective ND and / or MBC flag in the FLXAnFRNDAT1 to FLXAnFRNDAT4 registers and the FLXAnFRMBSC1 to FLXAnFRMBSC4 registers are also set to 1.

Reset when leaving CONFIG state or when entering STARTUP state.

Reset by the CHI command CLEAR_RAMS.

(2) FLXAnFRMHDS.MBT

Message Buffer Transmitted Flag

Number of last successfully transmitted message buffer.

If the message buffer is configured for single-shot mode, the respective TXR flag in the FLXAnFRTXRQ1 to FLXAnFRTXRQ4 registers was reset to 0.

Reset when leaving CONFIG state or when entering STARTUP state.

Reset by the CHI command CLEAR_RAMS.

(3) FLXAnFRMHDS.FMB

Faulty Message Buffer Number Flag

This flag indicates that an access error occurred when reading from the message buffer referenced by FLXAnFRMHDS.FMB.

The value of this flag is only valid when one of flags FLXAnFRMHDS.AMR, FLXAnFRMHDS.ATBF1, FLXAnFRMHDS.ATBF2, and FLXAnFRMHDS.FMBD is set to 1.

This flag is not updated while the FLXAnFRMHDS.FMBD flag is 1.

This flag is cleared by the CHI command CLEAR_RAMS.

(4) FLXAnFRMHDS.CRAM

Internal RAM Clear Flag

This flag indicates that the CHI command CLEAR_RAMS is ongoing (all bits of the message RAM, input buffer, output buffer and TBF are written to 0).

This flag is set by the CHI command CLEAR_RAMS.

(5) FLXAnFRMHDS.MFMB

Multiple Faulty Message Buffer Detection Flag

Writing 0 has no effect on the bit value.

This bit is cleared when writing 1 to it.

This bit indicates that an additional faulty message buffer was detected while the FLXAnFRMHDS.FMBD flag is set.

This bit is cleared by the CHI command CLEAR_RAMS.

(6) FLXAnFRMHDS.FMBD

Faulty Message Buffer Detection Flag

Writing 0 has no effect on the bit value.

This bit is cleared when writing 1 to it.

This bit indicates that the message buffer referenced by FLXAnFRMHDS.FMB holds faulty data due to an access error.

This bit is cleared by the CHI command CLEAR_RAMS.

(7) FLXAnFRMHD.ATBF2

TBFRAM B Access Error Flag

Writing 0 has no effect on the bit value.

This bit is cleared when writing 1 to it.

This flag indicates that an access error occurred when reading the TBFRAM B.

CAUTION

When this flag changes from 0 to 1, the FLXAnFREIR.AERR bit is set to 1. This flag can be reset by the CHI command CLEAR_RAMS.

(8) FLXAnFRMHD.ATBF1

TBFRAM A Access Error Flag

Writing 0 has no effect on the bit value.

This bit is cleared when writing 1 to it.

This flag indicates that an access error occurred when reading the TBFRAM A.

CAUTION

When this flag changes from 0 to 1, the FLXAnFREIR.AERR bit is set to 1. This flag can be reset by the CHI command CLEAR_RAMS.

(9) FLXAnFRMHDS.AMR

Message RAM Access Error Flag

Writing 0 has no effect on the bit value.

This bit is cleared when writing 1 to it.

This flag indicates that an access error occurred when reading the Message RAM.

CAUTION

When this flag changes from 0 to 1, the FLXAnFREIR.AERR bit is set to 1. This flag can be reset by the CHI command CLEAR_RAMS.

18.2.9.2 FLXAnFRLDTS — FlexRay Last Dynamic Transmit Slot Register

Access: This register can only be read in 8-, 16-, or 32-bit units.

Address: <FLXn_base> + 0314_H

Value after reset: $0000\ 0000_H$

Bit	31	30	29	28	27	26	25	24	23	22	21	20	19	18	17	16
	—	—	—	—	—	LDTB[10:0]										
Value after reset	0	0	0	0	0	0	0	0	0	0	0	0	0	0	0	0
R/W	R	R	R	R	R	R	R	R	R	R	R	R	R	R	R	R

Bit	15	14	13	12	11	10	9	8	7	6	5	4	3	2	1	0
	—	—	—	—	—	LDTA[10:0]										
Value after reset	0	0	0	0	0	0	0	0	0	0	0	0	0	0	0	0
R/W	R	R	R	R	R	R	R	R	R	R	R	R	R	R	R	R

Table 18.63 FLXAnFRLDTS Register Contents

Bit Position	Bit Name	Function
31 to 27	Reserved	When read, the value after reset is read.
26 to 16	LDTB[10:0]	Last Dynamic Transmission Channel B Flag
15 to 11	Reserved	When read, the value after reset is read.
10 to 0	LDTA[10:0]	Last Dynamic Transmission Channel A Flag

(1) FLXAnFRLDTS.LDTB

Last Dynamic Transmission Channel B Flag

Stores the value of vSlotCounter[B] at the time of the last frame transmission on channel B in the dynamic segment of this node.

It is updated at the end of the dynamic segment and is reset to zero if no frame was transmitted during the dynamic segment.

Reset when leaving CONFIG state or when entering STARTUP state.

Reset by the CHI command CLEAR_RAMS of channel B.

(2) FLXAnFRLDTS.LDTA

Last Dynamic Transmission Channel A Flag

Stores the value of vSlotCounter[A] at the time of the last frame transmission on channel A in the dynamic segment of this node.

It is updated at the end of the dynamic segment and is reset to zero if no frame was transmitted during the dynamic segment.

Reset when leaving CONFIG state or when entering STARTUP state.

Reset by the CHI command CLEAR_RAMS of channel A.

18.2.9.3 FLXAnFRFSR — FlexRay FIFO Status Register

Access: This register can only be read in 8-, 16-, or 32-bit units.

Address: <FLXn_base> + 0318_H

Value after reset: $0000\ 0000_H$

Bit	31	30	29	28	27	26	25	24	23	22	21	20	19	18	17	16
	—	—	—	—	—	—	—	—	—	—	—	—	—	—	—	—
Value after reset	0	0	0	0	0	0	0	0	0	0	0	0	0	0	0	0
R/W	R	R	R	R	R	R	R	R	R	R	R	R	R	R	R	R

Bit	15	14	13	12	11	10	9	8	7	6	5	4	3	2	1	0
	RFFL[7:0]								—	—	—	—	—	RFO	RFCL	RFNE
Value after reset	0	0	0	0	0	0	0	0	0	0	0	0	0	0	0	0
R/W	R	R	R	R	R	R	R	R	R	R	R	R	R	R	R	R

Table 18.64 FLXAnFRFSR Register Contents

Bit Position	Bit Name	Function
31 to 16	Reserved	When read, the value after reset is read.
15 to 8	RFFL[7:0]	Receive FIFO Fill Level Flag
7 to 3	Reserved	When read, the value after reset is read.
2	RFO	Receive FIFO Overrun Flag 0: No receive FIFO overrun detected 1: A receive FIFO overrun has been detected
1	RFCL	Receive FIFO Critical Level Flag 0: Receive FIFO below critical level 1: Receive FIFO critical level reached
0	RFNE	Receive FIFO Not Empty Flag 0: Receive FIFO is empty 1: Receive FIFO is not empty

(1) FLXAnFRFSR.RFFL

Receive FIFO Fill Level Flag

Indicates the number of FIFO buffers filled with new data not yet read by the Host. Maximum value is 128.

Reset when leaving CONFIG state or when entering STARTUP state.

Reset by the CHI command CLEAR_RAMS.

(2) FLXAnFRFSR.RFO

Receive FIFO Overrun Flag

The flag is set to 1 by the CC when a receive FIFO overrun is detected.

When a receive FIFO overrun occurs, the oldest message is overwritten with the actual received message. In addition, the FLXAnFREIR.RFO flag is set to 1.

The flag is cleared by the next FIFO read access issued by the Host.

Reset when leaving CONFIG state or when entering STARTUP state.

Reset by the CHI command CLEAR_RAMS.

(3) FLXAnFRFSR.RFCL

Receive FIFO Critical Level Flag

This flag is set to 1 when the value of the receive FIFO fill level FLXAnFRFSR.RFFL[7:0] is equal or greater than the critical level as configured by FLXAnFRFCL.CL.

When this bit changes from 0 to 1 bit FLXAnFRSIR.RFCL is set to 1, and if enabled, an interrupt is generated.

The flag is cleared by the CC as soon as the value of the FLXAnFRFSR.RFFL[7:0] bits drops below the value set in the FLXAnFRFCL.CL bit.

Reset when leaving CONFIG state or when entering STARTUP state.

Reset by the CHI command CLEAR_RAMS.

(4) FLXAnFRFSR.RFNE

Receive FIFO Not Empty Flag

This flag is set to 1 by the CC when a received valid frame (data or null frame depending on rejection mask) was stored in the FIFO. In addition, the FLXAnFRSIR.RFNE bit is set to 1.

The bit is reset to 0 after the Host has read all messages from the FIFO.

Reset when leaving CONFIG state or when entering STARTUP state.

Reset by the CHI command CLEAR_RAMS.

18.2.9.4 FLXAnFRMHDF — FlexRay Message Handler Constraints Flags Register

Some constraints exist for the Message Handler regarding bus clock frequency, Message RAM configuration, and FlexRay bus traffic. To simplify software development, constraints violations are reported by setting flags in the FLXAnFRMHDF.

Access: This register can only be read in 8-, 16-, or 32-bit units.

Address: <FLXn_base> + $031C_H$

Value after reset: $0000\ 0000_H$

Bit	31	30	29	28	27	26	25	24	23	22	21	20	19	18	17	16
	—	—	—	—	—	—	—	—	—	—	—	—	—	—	—	—
Value after reset	0	0	0	0	0	0	0	0	0	0	0	0	0	0	0	0
R/W	R	R	R	R	R	R	R	R	R	R	R	R	R	R	R	R

Bit	15	14	13	12	11	10	9	8	7	6	5	4	3	2	1	0
	—	—	—	—	—	—	—	WAHP	TNSB	TNSA	TBFB	TBFA	FNFB	FNFA	SNUB	SNUA
Value after reset	0	0	0	0	0	0	0	0	0	0	0	0	0	0	0	0
R/W	R	R	R	R	R	R	R	R/W	R/W	R/W	R/W	R/W	R/W	R/W	R/W	R/W

Table 18.65 FLXAnFRMHDF Register Contents

Bit Position	Bit Name	Function
31 to 9	Reserved	When read, the value after reset is read. When writing, write the value after reset.
8	WAHP	Write Attempt to Header Partition Flag 0: No write attempt to header partition 1: Write attempt to header partition
7	TNSB	Transmission Not Started Channel B Flag 0: No transmission not started on channel B 1: Transmission not started on channel B
6	TNSA	Transmission Not Started Channel A Flag 0: No transmission not started on channel A 1: Transmission not started on channel A
5	TBFB	TBFB Access Failure B Flag 0: No TBFB access failure 1: TBFB access failure
4	TBFA	Temporary buffer Access Failure A Flag 0: No TBFA access failure 1: TBFA access failure
3	FNFB	Find Sequence Not Finished Channel B Flag 0: No find sequence not finished for channel B 1: Find sequence not finished for channel B
2	FNFA	Find Sequence Not Finished Channel A Flag 0: No find sequence not finished for channel A 1: Find sequence not finished for channel A
1	SNUB	Status Not Updated Channel B Flag 0: No overload condition occurred when updating MBS (FLXAnFRMBS) for channel B 1: Message buffer status (FLXAnFRMBS) for channel B not updated
0	SNUA	Status Not Updated Channel A Flag 0: No overload condition occurred when updating MBS (FLXAnFRMBS) for channel A 1: Message buffer status (FLXAnFRMBS) for channel A not updated

(1) FLXAnFRMHDF.WAHP

Write Attempt to Header Partition Flag

Writing 0 has no effect on the bit value.

This bit is cleared when writing a 1 to it.

Outside DEFAULT_CONFIG and CONFIG state this flag is set to 1 by the CC when the message handler tries to write message data into the header partition of the Message RAM due to faulty configuration of a message buffer. The write attempt is not executed, to protect the header partition from unintended write accesses.

When this flag changes from 0 to 1, the FLXAnFREIR.MHF flag is set to 1.

Reset when leaving CONFIG state or when entering STARTUP state.

Reset by the CHI command CLEAR_RAMS.

(2) FLXAnFRMHDF.TNSB

Transmission Not Started Channel B Flag

Writing 0 has no effect on the bit value.

This bit is cleared when writing a 1 to it.

This flag is set to 1 by the CC when the Message Handler was not ready to start a scheduled transmission on channel B at the action point of the configured slot.

When this flag changes from 0 to 1, flag FLXAnFREIR.MHF is set to 1.

Reset when leaving CONFIG state or when entering STARTUP state.

Reset by the CHI command CLEAR_RAMS.

(3) FLXAnFRMHDF.TNSA

Transmission Not Started Channel A Flag

Writing 0 has no effect on the bit value.

This bit is cleared when writing a 1 to it.

This flag is set by the CC when the Message Handler was not ready to start a scheduled transmission on channel A at the action point of the configured slot.

When this flag changes from 0 to 1, flag FLXAnFREIR.MHF is set to 1.

Reset when leaving CONFIG state or when entering STARTUP state.

Reset by the CHI command CLEAR_RAMS.

(4) FLXAnFRMHDF.TBFB

TBFB Access Failure Flag

Writing 0 has no effect on the bit value.

This bit is cleared when writing a 1 to it.

This flag is set to 1 by the CC when a read or write access to TBFB requested by PRT (Protocol controller) B could not complete within the available time.

When this flag changes from 0 to 1, flag FLXAnFREIR.MHF is set to 1.

Reset when leaving CONFIG state or when entering STARTUP state.

Reset by the CHI command CLEAR_RAMS.

(5) FLXAnFRMHDF.TBFA

TBFA Access Failure Flag

Writing 0 has no effect on the bit value.

This bit is cleared when writing a 1 to it.

This flag is set to 1 by the CC when a read or write access to TBFA requested by PRT A could not complete within the available time.

When this flag changes from 0 to 1, flag FLXAnFREIR.MHF is set to 1.

Reset when leaving CONFIG state or when entering STARTUP state.

Reset by the CHI command CLEAR_RAMS.

(6) FLXAnFRMHDF.FNFB

Find sequence Not Finished flag, channel B

Writing 0 has no effect on the bit's value.

Writing a 1 to the bit clears it.

This flag is set to 1 by the CC when the message handler, due to being overloaded, was not able to finish a find sequence (scan of message RAM for a matching message buffer).

When this flag changes from 0 to 1, flag FLXAnFREIR.MHF is also set to 1.

The value is reset on leaving the CONFIG state or entering the STARTUP state.

The value is also reset by the CLEAR_RAMS CHI command.

(7) FLXAnFRMHDF.FNFA

Find sequence Not Finished flag, channel A

Writing 0 has no effect on the bit value.

This bit is cleared when writing a 1 to it.

This flag is set to 1 by the CC when the Message Handler, due to overload condition, was not able to finish a find sequence (scan of Message RAM for matching message buffer).

When this flag changes from 0 to 1, flag FLXAnFREIR.MHF is set to 1.

Reset when leaving CONFIG state or when entering STARTUP state.

Reset by the CHI command CLEAR_RAMS.

(8) FLXAnFRMHDF.SNUB

Status Not Updated Channel B Flag

Writing 0 has no effect on the bit value.

This bit is cleared when writing a 1 to it.

This flag is set to 1 by the CC when the Message Handler, due to overload condition, was not able to update a message buffer's status (FLXAnFRMBS).

When this flag changes from 0 to 1, flag FLXAnFREIR.MHF is set to 1.

Reset when leaving CONFIG state or when entering STARTUP state.

Reset by the CHI command CLEAR_RAMS.

(9) FLXAnFRMHDF.SNUA

Status Not Updated Channel A Flag

Writing 0 has no effect on the bit value.

This bit is cleared when writing a 1 to it.

This flag is set to 1 by the CC when the Message Handler, due to overload condition, was not able to update a message buffer's status (FLXAnFRMBS).

When this flag changes from 0 to 1, flag FLXAnFREIR.MHF is set to 1.

Reset when leaving CONFIG state or when entering STARTUP state.

Reset by the CHI command CLEAR_RAMS.

18.2.9.5 FLXAnFRTXRQm — FlexRay Transmission Request m (m = 1 to 4)

The four registers reflect the state of the TXR flags of all configured message buffers. The flags are evaluated for transmit buffers only. If the number of configured message buffers is less than 128, the remaining TXR flags have no meaning.

Access: This register can be read/written in 8-, 16-, or 32-bit units.

Address: <FLXn_base> + 0320_H to <FLXn_base> + $032C_H$ (<FLXn_base> + 0320_H + (m–1)*4)

Value after reset: $0000\ 0000_H$

Bit	31	30	29	28	27	26	25	24	23	22	21	20	19	18	17	16
	TXRp[31:16]															
Value after reset	0	0	0	0	0	0	0	0	0	0	0	0	0	0	0	0
R/W	R	R	R	R	R	R	R	R	R	R	R	R	R	R	R	R

Bit	15	14	13	12	11	10	9	8	7	6	5	4	3	2	1	0
	TXRp[15:0]															
Value after reset	0	0	0	0	0	0	0	0	0	0	0	0	0	0	0	0
R/W	R	R	R	R	R	R	R	R	R	R	R	R	R	R	R	R

Table 18.66 FLXAnFRTXRQm Register Contents

Bit Position	Bit Name	Function
31:0	TXRp[31:0]	Transmission Request Flag p

(1) FLXAnFRTXRQm.TXRp (p = (m – 1)*32 to (m*32 – 1))

Transmission Request Flag p

If the flag is set to 1, the respective message buffer is ready for transmission respectively transmission of this message buffer is in progress.

In single-shot mode the flags are reset to 0 after transmission has completed.

This bit is cleared by the CHI command CLEAR_RAMS.

18.2.9.6 FLXAnFRNDATm — FlexRay New Data Register m (m = 1 to 4)

The four registers reflect the state of the ND flags of all configured message buffers. ND flags belonging to transmit buffers have no meaning. If the number of configured message buffers is less than 128, the remaining ND flags have no meaning.

Access: This register can only be read in 8-, 16-, or 32-bit units.

Address: <FLXn_base> + 0330_H to <FLXn_base> + $033C_H$ (<FLXn_base> + 0330_H + (m-1)*4)

Value after reset: $0000\ 0000_H$

Bit	31	30	29	28	27	26	25	24	23	22	21	20	19	18	17	16
	NDp[31:16]															
Value after reset	0	0	0	0	0	0	0	0	0	0	0	0	0	0	0	0
R/W	R	R	R	R	R	R	R	R	R	R	R	R	R	R	R	R

Bit	15	14	13	12	11	10	9	8	7	6	5	4	3	2	1	0
	NDp[15:0]															
Value after reset	0	0	0	0	0	0	0	0	0	0	0	0	0	0	0	0
R/W	R	R	R	R	R	R	R	R	R	R	R	R	R	R	R	R

Table 18.67 FLXAnFRNDATm Register Contents

Bit Position	Bit Name	Function
31 to 0	NDp[31:0]	New Data Flag p

(1) FLXAnFRNDATm.NDp (p = (m – 1)*32 to (m*32 – 1))

New Data Flag p

The flags are set to 1 when a valid received data frame matches the message buffer's filter configuration, independent of the payload length received or the payload length configured for that message buffer.

The flags are not set to 1 after reception of null frames except for message buffers belonging to the receive FIFO.

An ND flag is reset to 0 when the header section of the corresponding message buffer is reconfigured or when the data section has been transferred to the Output Buffer.

Reset when leaving CONFIG state or when entering STARTUP state.

This bit is cleared by the CHI command CLEAR_RAMS.

18.2.9.7 FLXAnFRMBSCm — FlexRay Message Buffer Status Changed Register m (m = 1 to 4)

The four registers reflect the state of the MBC flags of all configured message buffers. If the number of configured message buffers is less than 128, the remaining MBC flags have no meaning.

Access: This register can only be read in 8-, 16-, or 32-bit units.

Address: <FLXn_base> + 0340_H to <FLXn_base> + $034C_H$ (<FLXn_base> + 0340_H + (m–1)*4)

Value after reset: $0000\ 0000_H$

Bit	31	30	29	28	27	26	25	24	23	22	21	20	19	18	17	16
	MBCp[31:16]															
Value after reset	0	0	0	0	0	0	0	0	0	0	0	0	0	0	0	0
R/W	R	R	R	R	R	R	R	R	R	R	R	R	R	R	R	R

Bit	15	14	13	12	11	10	9	8	7	6	5	4	3	2	1	0
	MBCp[15:0]															
Value after reset	0	0	0	0	0	0	0	0	0	0	0	0	0	0	0	0
R/W	R	R	R	R	R	R	R	R	R	R	R	R	R	R	R	R

Table 18.68 FLXAnFRMBSCm Register Contents

Bit Position	Bit Name	Function
31 to 0	MBCp[31:0]	Message Buffer Status Changed Flag p

(1) FLXAnFRMBSCm.MBCp (p = (m – 1)*32 to (m*32 – 1))

Message Buffer Status Changed Flag p

Indicates whether the Message Handler has changed one of the status flags VFRA, VFRB, SEOA, SEOB, CEOA, CEOB, SVOA, SVOB, TCIA, TCIB, ESA, ESB, MLST, FTA, FTB in the header section (see **Section 18.2.11.5, FLXAnFRMBS — FlexRay Message Buffer Status Register** and **Section 18.3.13.1, Header Partition** of the respective message buffer.

An MBC flag is reset to 0 when the header section of the corresponding message buffer is reconfigured or when it has been transferred to the Output Buffer.

Reset when leaving CONFIG state or when entering STARTUP state.

This bit is cleared by the CHI command CLEAR_RAMS.

18.2.10 Input Buffer

Double buffer structure consisting of Input Buffer Host and Input Buffer Shadow. While the Host can write to Input Buffer Host, the transfer to the Message RAM is done from Input Buffer Shadow. The Input Buffer holds the header and data sections to be transferred to the selected message buffer in the Message RAM. It is used to configure the message buffers in the Message RAM and to update the data sections of transmit buffers.

When updating the header section of a message buffer in the Message RAM from the Input Buffer, the Message Buffer Status as described in **Section 18.2.11.5, FLXAnFRMBS — FlexRay Message Buffer Status Register** is automatically reset to zero.

The header sections of message buffers belonging to the receive FIFO can only be (re)configured when the CC is in DEFAULT_CONFIG or CONFIG state. For those message buffers only the payload length configured and the data pointer need to be configured via bits FLXAnFRWRHS2.PLC[6:0] and bits FLXAnFRWRHS3.DP[10:0]. All information required for acceptance filtering is taken from the FIFO rejection filter and the FIFO rejection filter mask.

The data transfer between Input Buffer (IBF) and Message RAM is described in detail in **Section 18.3.12.2, Host access to Message RAM**.

These registers cannot be written when the input data transfer function shown in **Section 18.3.16.1, Input Data Transfer** is used and the FLXAnFRITS.ITS bit is 1.

18.2.10.1 FLXAnFRWRDSm — FlexRay Write Data Section Register m (m = 1 to 64)

This register holds the data wards to be transferred to the data section of the specified message buffer. The number of data words written to the Message RAM is defined by the payload length configured in bits FLXAnFRWRHS2.PLC[6:0].

Access: This register can be read/written in 8-, 16-, or 32-bit units.

Address: <FLXn_base> + 0400_H to <FLXn_base> + $04FC_H$(<FLXn_base> + 0400_H+(m–1)*4)

Value after reset: $0000\ 0000_H$

Bit	31	30	29	28	27	26	25	24	23	22	21	20	19	18	17	16
	MD[31:16]															
Value after reset	0	0	0	0	0	0	0	0	0	0	0	0	0	0	0	0
R/W	R/W	R/W	R/W	R/W	R/W	R/W	R/W	R/W	R/W	R/W	R/W	R/W	R/W	R/W	R/W	R/W

Bit	15	14	13	12	11	10	9	8	7	6	5	4	3	2	1	0
	MD[15:0]															
Value after reset	0	0	0	0	0	0	0	0	0	0	0	0	0	0	0	0
R/W	R/W	R/W	R/W	R/W	R/W	R/W	R/W	R/W	R/W	R/W	R/W	R/W	R/W	R/W	R/W	R/W

Table 18.69 FLXAnFRWRDSm Register Contents

Bit Position	Bit Name	Function
b[31:0]	MD[31:0]	Message Data Bit

(1) FLXAnFRWRDSm.MD

Message Data Bit

Reset by the CHI command CLEAR_RAMS.

CAUTIONS

1. In case the FLXAnFRWRHS2.PLC[6:0] bits specifies an odd payload length, the remaining message data bytes are unused.
2. When writing to the FLXAnFRWRDSm register, all bytes have to be written by one 32-bit access, two consecutive 16-bit accesses, or four consecutive 8- bit accesses before the transfer from the Input Buffer to the Message RAM is started. If not all bytes of a 32- bit word have been written by the Host (8/16-bit access only), the FLXAnFRWRDSm register holds partly undefined data.

18.2.10.2 FLXAnFRWRHS1 — FlexRay Write Header Section Register 1

Access: This register can be read/written in 8-, 16-, or 32-bit units.

Address: <FLXn_base> + 0500_H

Value after reset: $0000\ 0000_H$

Bit	31	30	29	28	27	26	25	24	23	22	21	20	19	18	17	16
	—	—	MBI	TXM	PPIT	CFG	CH[1:0]		—	CYC[6:0]						
Value after reset	0	0	0	0	0	0	0	0	0	0	0	0	0	0	0	0
R/W	R	R	R/W	R/W	R/W	R/W	R/W	R/W	R	R/W	R/W	R/W	R/W	R/W	R/W	R/W

Bit	15	14	13	12	11	10	9	8	7	6	5	4	3	2	1	0
	—	—	—	—	—	FID[10:0]										
Value after reset	0	0	0	0	0	0	0	0	0	0	0	0	0	0	0	0
R/W	R	R	R	R	R	R/W	R/W	R/W	R/W	R/W	R/W	R/W	R/W	R/W	R/W	R/W

Table 18.70 FLXAnFRWRHS1 Register Contents

Bit Position	Bit Name	Function
31, 30	Reserved	When read, the value after reset is read. When writing, write the value after reset.
29	MBI	Message Buffer Interrupt Bit 0: The corresponding message buffer interrupt is disabled 1: The corresponding message buffer interrupt is enabled
28	TXM	Transmission Mode Setting Bit 0: Continuous mode 1: Single-shot mode
27	PPIT	Payload Preamble Indicator Transmit Bit 0: Payload Preamble Indicator is set to 0 1: Payload Preamble Indicator is set to 1
26	CFG	Message Buffer Direction Configuration Bit 0: The corresponding buffer is configured as Receive Buffer 1: The corresponding buffer is configured as Transmit Buffer
25,24	CH[1:0]	Channel Filter Control Bit
23	Reserved	When read, the value after reset is read. When writing, write the value after reset.
22 to 16	CYC[6:0]	Cycle Code Bit
15 to 11	Reserved	When read, the value after reset is read. When writing, write the value after reset.
10 to 0	FID[10:0]	Frame ID Bit

(1) FLXAnFRWRHS1.MBI

Message Buffer Interrupt Enable Bit

This bit enables the message buffer interrupt.

After a dedicated receive buffer has been updated by the Message Handler, bit FLXAnFRSIR.RXI and /or bit FLXAnFRSIR.MBSI are set to 1. After a transmission has completed bit FLXAnFRSIR.TXI is set to 1.

(2) FLXAnFRWRHS1.TXM

Transmission Mode Setting Bit

This bit selects transmit mode of the corresponding message buffer. For transmit mode, see **Section 18.3.9.3, Transmit Buffers**.

(3) FLXAnFRWRHS1.PPIT

Payload Preamble Indicator Transmit Bit

This bit is used to control the state of the Payload Preamble Indicator in transmit frames in transmit frames of the corresponding message buffer.

If the bit is set to 1 in a static message buffer, the respective message buffer holds network management information.

If the bit is set to 1 in a dynamic message buffer the first two bytes of the payload segment may be used for message ID filtering by the receiver. Message ID filtering of received FlexRay frames is not supported by the FlexRay module, but can be done by the Host.

(4) FLXAnFRWRHS1.CFG

Message Buffer Direction Configuration Bit

This bit is used to configure the corresponding buffer as transmit buffer or as receive buffer. For message buffers belonging to the receive FIFO the bit is not evaluated.

When an unused 32-bit or larger area is not allocated to the head of the data partition, set the data section of the message buffer that is allocated immediately after the header partition (of the last buffer) as a transmit buffer by setting this bit to 1.

(5) FLXAnFRWRHS1.CH

Channel Filter Control Bit

The 2-bit channel filtering field associated with each buffer serves as a filter for receive buffers, and as a control field for transmit buffers.

CH[1:0]	Transmit Buffer transmit frame on	Receive Buffer store frame received from
00	No transmission	Ignore frame
01	Channel A	Channel A
10	Channel B	Channel B
11	Both channels (static segment only)	Channel A or B (store first semantically valid frame; static segment only)

CAUTION

If a message buffer is configured for the dynamic segment and both bits of the channel filtering field are set to 1, no frames are transmitted resp. received frames are ignored (same function as CH = “00_B”)

(6) FLXAnFRWRHS1.CYC

Cycle Code Bit

The 7-bit cycle code determines the cycle set used for cycle counter filtering.

For details about the configuration of the cycle code **Section 18.3.8.2, Cycle Counter Filtering**.

(7) FLXAnFRWRHS1.FID

Frame ID Bit

Frame ID of the selected message buffer. The frame ID defines the slot number for transmission / reception of the respective message.

Message buffers with frame ID = 0 are considered as not valid.

18.2.10.3 FLXAnFRWRHS2 — FlexRay Write Header Section Register 2

Access: This register can be read/written in 8-, 16-, or 32-bit units.

Address: <FLXn_base> + 0504_H

Value after reset: $0000\ 0000_H$

Bit	31	30	29	28	27	26	25	24	23	22	21	20	19	18	17	16
	—	—	—	—	—	—	—	—	—	PLC[6:0]						
Value after reset	0	0	0	0	0	0	0	0	0	0	0	0	0	0	0	0
R/W	R	R	R	R	R	R	R	R	R	R/W	R/W	R/W	R/W	R/W	R/W	R/W

Bit	15	14	13	12	11	10	9	8	7	6	5	4	3	2	1	0
	—	—	—	—	—	CRC[10:0]										
Value after reset	0	0	0	0	0	0	0	0	0	0	0	0	0	0	0	0
R/W	R	R	R	R	R	R/W	R/W	R/W	R/W	R/W	R/W	R/W	R/W	R/W	R/W	R/W

Table 18.71 FLXAnFRWRHS2 Register Contents

Bit Position	Bit Name	Function
31 to 23	Reserved	When read, the value after reset is read. When writing, write the value after reset.
22 to 16	PLC[6:0]	Payload Length Configured Bit
15 to 11	Reserved	When read, the value after reset is read. When writing, write the value after reset.
10 to 0	CRC[10:0]	Header CRC Bit (vRF!Header!HeaderCRC) Receive Buffer: Configuration not required Transmit Buffer: Header CRC is configured

(1) FLXAnFRWRHS2.PLC

Payload Length Configured Bit

Length of data section (number of 2-byte words) as configured by the Host.

During static segment the static frame payload length as configured by bits FLXAnFRMHDC.SFDL[6:0] defines the payload length for all static frames. If the payload length configured by bits FLXAnFRWRHS2.PLC[6:0] is shorter than this value padding bytes are inserted to ensure that frames have proper physical length. The padding pattern is "0000_H" (see **Section 18.3.9.3, Transmit Buffers**).

(2) FLXAnFRWRHS2.CRC

Header CRC Bit (vRF!Header!HeaderCRC)

Setting of the receive buffer is not required.

Transmitting of the message buffer needs the header CRC calculation and setting.

For calculation of the header CRC the payload length of the frame send on the bus has to be considered. In static segment the payload length of all frames is configured by bits FLXAnFRMHDC.SFDL[6:0].

18.2.10.4 FLXAnFRWRHS3 — FlexRay Write Header Section Register 3

Access: This register can be read/written in 8-, 16-, or 32-bit units.

Address: <FLXn_base> + 0508_H

Value after reset: $0000\ 0000_H$

Bit	31	30	29	28	27	26	25	24	23	22	21	20	19	18	17	16
	—	—	—	—	—	—	—	—	—	—	—	—	—	—	—	—
Value after reset	0	0	0	0	0	0	0	0	0	0	0	0	0	0	0	0
R/W	R	R	R	R	R	R	R	R	R	R	R	R	R	R	R	R

Bit	15	14	13	12	11	10	9	8	7	6	5	4	3	2	1	0
	—	—	—	—	—	DP[10:0]										
Value after reset	0	0	0	0	0	0	0	0	0	0	0	0	0	0	0	0
R/W	R	R	R	R	R	R/W	R/W	R/W	R/W	R/W	R/W	R/W	R/W	R/W	R/W	R/W

Table 18.72 FLXAnFRWRHS3 Register Contents

Bit Position	Bit Name	Function
31 to 11	Reserved	When read, the value after reset is read. When writing, write the value after reset.
10 to 0	DP[10:0]	Data Pointer Bit

(1) FLXAnFRWRHS3.DP

Data Pointer Bit

Configures the pointer to the first 32-bit word of the data section of the addressed message buffer in the Message RAM.

18.2.10.5 FLXAnFRIBCM — FlexRay Input Buffer Command Mask Register

Configures how the message buffer in the Message RAM selected by register FLXAnFRIBCR is updated. When IBF Host and IBF Shadow are swapped, also mask bits FLXAnFRIBCM.LHSH, FLXAnFRIBCM.LDSH, and FLXAnFRIBCM.STXRH are swapped with bits FLXAnFRIBCM.LHSS, FLXAnFRIBCM.LDSS, and FLXAnFRIBCM.STXRS.

Access: This register can be read/written in 8-, 16-, or 32-bit units.

Address: <FLXn_base> + 0510_H

Value after reset: $0000\ 0000_H$

Bit	31	30	29	28	27	26	25	24	23	22	21	20	19	18	17	16
	—	—	—	—	—	—	—	—	—	—	—	—	—	STXRS	LDSS	LHSS
Value after reset	0	0	0	0	0	0	0	0	0	0	0	0	0	0	0	0
R/W	R	R	R	R	R	R	R	R	R	R	R	R	R	R	R	R

Bit	15	14	13	12	11	10	9	8	7	6	5	4	3	2	1	0
	—	—	—	—	—	—	—	—	—	—	—	—	—	STXRH	LDSH	LHSH
Value after reset	0	0	0	0	0	0	0	0	0	0	0	0	0	0	0	0
R/W	R	R	R	R	R	R	R	R	R	R	R	R	R	R/W	R/W	R/W

Table 18.73 FLXAnFRIBCM Register Contents

Bit Position	Bit Name	Function
31 to 19	Reserved	When read, the value after reset is read. When writing, write the value after reset.
18	STXRS	Set Transmission Request Shadow Flag 0: Reset TXR flag 1: Set TXR flag, transmit buffer released for transmission (operation ongoing or finished)
17	LDSS	Load Data Section Shadow Flag 0: Data section is not updated 1: Data section selected for transfer from Input Buffer to the Message RAM (transfer ongoing or finished)
16	LHSS	Load Header Section Shadow Flag 0: Header section is not updated 1: Header section selected for transfer from Input Buffer to the Message RAM (transfer ongoing or finished)
15 to 3	Reserved	When read, the value after reset is read. When writing, write the value after reset.
2	STXRH	Set Transmission Request Host Bit 0: Reset TXR flag 1: Set TXR flag, transmit buffer released for transmission
1	LDSH	Load Data Section Host Bit 0: Data section is not updated 1: Data section selected for transfer from Input Buffer to the Message RAM
0	LHSH	Load Header Section Host Bit 0: Header section is not updated 1: Header section selected for transfer from Input Buffer to the Message RAM

(1) FLXAnFRIBCM.STXRS

Set Transmission Request Shadow Flag

(2) FLXAnFRIBCM.LDSS

Load Data Section Shadow Flag

(3) FLXAnFRIBCM.LHSS

Load Header Section Shadow Flag

(4) FLXAnFRIBCM.STXRH

Set Transmission Request Host Bit

If this bit is set to 1, the TXR flag for the selected message buffer is set in the FLXAnFRTXRQ1 to FLXAnFRTXRQ4 registers to release the message buffer for transmission. In single-shot mode the flag is cleared by the CC after transmission has completed.

TXR is evaluated for transmit buffers only.

(5) FLXAnFRIBCM.LDSH

Set Load Data Section Host Bit

(6) FLXAnFRIBCM.LHSH

Set Load Header Section Host Bit

18.2.10.6 FLXAnFRIBCR — FlexRay Input Buffer Command Request Register

When the Host writes the number of the target message buffer in the Message RAM to bits FLXAnFRIBCR.IBRH[6:0], IBF Host and IBF Shadow are swapped. In addition the message buffer numbers stored under bits FLXAnFRIBCR.IBRH[6:0] and bits FLXAnFRIBCR.IBRS[6:0] are also swapped (see **Section 18.3.12.2 (1), Data Transfer from Input Buffer to Message RAM**).

With this write operation bit FLXAnFRIBCR.IBSYS is set to 1. The Message Handler then starts to transfer the contents of IBF Shadow to the message buffer in the Message RAM selected by bits FLXAnFRIBCR.IBRS[6:0].

While the Message Handler transfers the data from IBF Shadow to the target message buffer in the Message RAM, the Host may write the next message into the IBF Host. After the transfer between IBF Shadow and the Message RAM has completed, bit FLXAnFRIBCR.IBSYS is set back to 0 and the next transfer to the Message RAM may be started by the Host by writing the respective target message buffer number to bits FLXAnFRIBCR.IBRH[6:0].

If a write access to bits FLXAnFRIBCR.IBRH[6:0] occurs while bit FLXAnFRIBCR.IBSYS is 1, bit FLXAnFRIBCR.IBSYH is set to 1. After completion of the ongoing data transfer from IBF Shadow to the Message RAM, IBF Host and IBF Shadow are swapped, bit FLXAnFRIBCR.IBSYH is reset to 0. Bit FLXAnFRIBCR.IBSYS remains set to 1, and the next transfer to the Message RAM is started. In addition the message buffer numbers stored under bits FLXAnFRIBCR.IBRH[6:0] and bits FLXAnFRIBCR.IBRS[6:0] are also swapped.

Any write access to an Input Buffer register while both bit FLXAnFRIBCR.IBSYS and bit FLXAnFRIBCR.IBSYH are set to 1 will cause the error flag FLXAnFREIR.IIBA to be set to 1.

Access: This register can be read/written in 8-, 16-, or 32-bit units.

Address: <FLXn_base> + 0514_H

Value after reset: 00000000_H

Bit	31	30	29	28	27	26	25	24	23	22	21	20	19	18	17	16
	IBSYS	—	—	—	—	—	—	—	—	IBRS[6:0]						
Value after reset	0	0	0	0	0	0	0	0	0	0	0	0	0	0	0	0
R/W	R	R	R	R	R	R	R	R	R	R	R	R	R	R	R	R

Bit	15	14	13	12	11	10	9	8	7	6	5	4	3	2	1	0
	IBSYH	—	—	—	—	—	—	—	—	IBRH[6:0]						
Value after reset	0	0	0	0	0	0	0	0	0	0	0	0	0	0	0	0
R/W	R	R	R	R	R	R	R	R	R	R/W	R/W	R/W	R/W	R/W	R/W	R/W

Table 18.74 FLXAnFRIBCR Register Contents (1/2)

Bit Position	Bit Name	Function
31	IBSYS	Input Buffer Busy Shadow Flag 0: Transfer between IBF Shadow and Message RAM completed 1: Transfer between IBF Shadow and Message RAM in progress
30 to 23	Reserved	When read, the value after reset is read. When writing, write the value after reset.
22 to 16	IBRS[6:0]	Input Buffer Request Shadow Flag
15	IBSYH	Input Buffer Busy Host Flag 0: No request pending 1: Request while transfer between IBF Shadow and Message RAM in progress

Table 18.74 FLXAnFRIBCR Register Contents (2/2)

Bit Position	Bit Name	Function
14 to 7	Reserved	When read, the value after reset is read. When writing, write the value after reset.
6 to 0	IBRH[6:0]	Input Buffer Request Host Bit

(1) FLXAnFRIBCR.IBSYS

Input Buffer Busy Shadow Flag

Set to 1 after writing bits FLXAnFRIBCR.IBRH[6:0].

This bit indicates transmitting between the IBF Shadow and the Message RAM is ongoing.

When the transfer between IBF Shadow and the Message RAM has completed, FLXAnFRIBCR.IBSYS is set back to 0.

(2) FLXAnFRIBCR.IBRS

Input Buffer Request Shadow Flag

Number of the target message buffer actually updated / lately updated.

(3) FLXAnFRIBCR.IBSYH

Input Buffer Busy Host Flag

Set to 1 by writing bits FLXAnFRIBCR.IBRH[6:0] while bit FLXAnFRIBCR.IBSYS is still 1.

This bit indicates transmitting between the IBF Shadow and the Message RAM is ongoing.

After the ongoing transfer between IBF Shadow and the Message RAM has completed, the FLXAnFRIBCR.IBSYH is set back to 0.

(4) FLXAnFRIBCR.IBRH

Input Buffer Request Host Bit

Selects the target message buffer in the Message RAM for data transfer from Input Buffer.

18.2.11 Output Buffer

Double buffer structure consisting of Output Buffer Host and Output Buffer Shadow. Used to read out message buffers from the Message RAM. While the Host can read from Output Buffer Host, the Message Handler transfers the selected message buffer from Message RAM to Output Buffer Shadow. The data transfer between Message RAM and Output Buffer (OBF) is described in **Section 18.3.12.2 (2), Data Transfer from Message RAM to Output Buffer**.

These registers cannot be written when the output data transfer function shown in **Section 18.3.16.2, Output Data Transfer**, in Output Data Transfer is used and the FLXAnFROTS.OTS bit is 1.

18.2.11.1 FLXAnFRRDDSm — FlexRay Read Data Section Register m (m = 1 to 64)

Holds the data words read from the data section of the addressed message buffer. This register holds the data wards to be transferred to the data section of the specified message buffer. The number of data words (DWn) read from the Message RAM is defined by the payload length configured in bits FLXAnFRRDHS2.PLC[6:0].

Access: This register can only be read in 8-, 16-, or 32-bit units.

Address: <FLXn_base> + 0600_H to <FLXn_base> + $06FC_H$ (<FLXn_base> + 0600_H + (m–1)*4)

Value after reset: $0000\ 0000_H$

Bit	31	30	29	28	27	26	25	24	23	22	21	20	19	18	17	16
	MD[31:16]															
Value after reset	0	0	0	0	0	0	0	0	0	0	0	0	0	0	0	0
R/W	R	R	R	R	R	R	R	R	R	R	R	R	R	R	R	R

Bit	15	14	13	12	11	10	9	8	7	6	5	4	3	2	1	0
	MD[15:0]															
Value after reset	0	0	0	0	0	0	0	0	0	0	0	0	0	0	0	0
R/W	R	R	R	R	R	R	R	R	R	R	R	R	R	R	R	R

Table 18.75 FLXAnFRRDDSm Register Contents

Bit Position	Bit Name	Function
31 to 0	MD[31:0]	Message Data

(1) FLXAnFRRDDSm.MD

Message Data Flag

Cleared by the CHI command CLEAR_RAMS.

CAUTION

In case the FLXAnFRWRHS2.PLC[6:0] bits specifies an odd payload length, the remaining message data bytes are unused.

18.2.11.2 FLXAnFRRDHS1 — FlexRay Read Header Section Register 1

Access: This register can only be read in 8-, 16-, or 32-bit units.

Address: <FLXn_base> + 0700_H

Value after reset: $0000\ 0000_H$

Bit	31	30	29	28	27	26	25	24	23	22	21	20	19	18	17	16
	—	—	MBI	TXM	PPIT	CFG	CH[1:0]		—	CYC[6:0]						
Value after reset	0	0	0	0	0	0	0	0	0	0	0	0	0	0	0	0
R/W	R	R	R	R	R	R	R	R	R	R	R	R	R	R	R	R

Bit	15	14	13	12	11	10	9	8	7	6	5	4	3	2	1	0
	—	—	—	—	—	FID[10:0]										
Value after reset	0	0	0	0	0	0	0	0	0	0	0	0	0	0	0	0
R/W	R	R	R	R	R	R	R	R	R	R	R	R	R	R	R	R

Table 18.76 FLXAnFRRDHS1 Register Contents

Bit Position	Bit Name	Function
31, 30	Reserved	When read, the value after reset is read.
29	MBI	Message Buffer Interrupt Flag
28	TXM	Transmission Mode Flag
27	PPIT	Payload Preamble Indicator Transmit Flag
26	CFG	Message Buffer Direction Configuration Flag
25, 24	CH[1:0]	Channel Filter Control Flag
23	Reserved	When read, the value after reset is read.
22 to 16	CYC[6:0]	Cycle Code
15 to 11	Reserved	When read, the value after reset is read.
10 to 0	FID[10:0]	Frame ID

(1) FLXAnFRRDHS1.MBI

Message Buffer Interrupt Flag

Values as configured by the Host via bit FLXAnFRWRHS1.MBI.

In case that the message buffer read from the Message RAM belongs to the receive FIFO this bit is set to 0.

(2) FLXAnFRRDHS1.TXM

Transmission Mode Flag

Values as configured by the Host via bit FLXAnFRWRHS1.TXM.

In case that the message buffer read from the Message RAM belongs to the receive FIFO this bit is set to 0.

(3) FLXAnFRRDHS1.PPIT

Payload Preamble Indicator Transmit Flag

Values as configured by the Host via bit FLXAnFRWRHS1.PPIT.

In case that the message buffer read from the Message RAM belongs to the receive FIFO this bit is set to 0.

(4) FLXAnFRRDHS1.CFG

Message Buffer Direction Configuration Flag

Values as configured by the Host via bit FLXAnFRWRHS1.CFG.

In case that the message buffer read from the Message RAM belongs to the receive FIFO this bit is set to 0.

(5) FLXAnFRRDHS1.CH

Channel Filter Control Flag

Values as configured by the Host via bit FLXAnFRWRHS1.CH.

In case that the message buffer read from the Message RAM belongs to the receive FIFO these bits are set to 0.

(6) FLXAnFRRDHS1.CYC

Cycle Code

Values as configured by the Host via bit FLXAnFRWRHS1.CYC.

In case that the message buffer read from the Message RAM belongs to the receive FIFO these bits are set to 0.

(7) FLXAnFRRDHS1.FID

Frame ID

Values as configured by the Host via bit FLXAnFRWRHS1.FID.

In case that the message buffer read from the Message RAM belongs to the receive FIFO these bits are holding the received frame ID.

18.2.11.3 FLXAnFRRDHS2 — FlexRay Read Header Section Register 2

Access: This register can only be read in 8-, 16-, or 32-bit units.

Address: <FLXn_base> + 0704_H

Value after reset: $0000\ 0000_H$

CAUTION

For message buffers belonging to the Static Buffer area or Static and Dynamic Buffer area, the FLXAnFRWRHS2 register is updated from data frames only.

Bit	31	30	29	28	27	26	25	24	23	22	21	20	19	18	17	16
	—	PLR[6:0]							—	PLC[6:0]						
Value after reset	0	0	0	0	0	0	0	0	0	0	0	0	0	0	0	0
R/W	R	R	R	R	R	R	R	R	R	R	R	R	R	R	R	R

Bit	15	14	13	12	11	10	9	8	7	6	5	4	3	2	1	0
	—	—	—	—	—	CRC[10:0]										
Value after reset	0	0	0	0	0	0	0	0	0	0	0	0	0	0	0	0
R/W	R	R	R	R	R	R	R	R	R	R	R	R	R	R	R	R

Table 18.77 FLXAnFRRDHS2 Register Contents

Bit Position	Bit Name	Function
31	Reserved	When read, the value after reset is read.
30 to 24	PLR[6:0]	Payload Length Received Flag (vRF!Header!Length)
23	Reserved	When read, the value after reset is read.
22 to 16	PLC[6:0]	Payload Length Configuration Flag
15 to 11	Reserved	When read, the value after reset is read.
10 to 0	CRC[10:0]	Header CRC Flag (vRF!Header!HeaderCRC)

(1) FLXAnFRRDHS2.PLR

Payload Length Received Flag (vRF!Header!Length)

Payload length (vRF!Header!Length) value updated from received data frames (exception: if message buffer belongs to the receive FIFO FLXAnFRRDSH2.PLR is also updated from received null frames).

(2) FLXAnFRRDHS2.PLC

Payload Length Configuration Flag

Length of data section (number of 2-byte words) as configured by the Host.

(3) FLXAnFRRDHS2.CRC

Header CRC Flag (vRF!Header!HeaderCRC)

Receive Buffer: Header CRC (vRF!Header!HeaderCRC) updated from received data frames

Transmit Buffer: Header CRC configured by the Host

(4) Data storage

When a message is stored into a message buffer the following behavior with respect to payload length received and payload length configured is implemented:

Bits FLXAnFRRDHS2.PLR[6:0] > Bits FLXAnFRRDHS2.PLC[6:0]:

The payload data stored in the message buffer is truncated to the payload length configured if bits FLXAnFRRDHS2.PLC[6:0] even or else truncated to bits FLXAnFRRDHS2.PLC[6:0] + 1.

Bits FLXAnFRRDHS2.PLR[6:0] <= Bits FLXAnFRRDHS2.PLC[6:0]:

The received payload data is stored into the message buffers data section. The remaining data bytes of the data section as configured by bits FLXAnFRRDHS2.PLC[6:0] are filled with undefined data.

Bits FLXAnFRRDHS2.PLR[6:0] = zero:

The message buffer’s data section is filled with undefined data

Bits FLXAnFRRDHS2.PLC[6:0] = zero:

Message buffer has no data section configured. No data is stored into the message buffer's data section.

CAUTIONS

1. The Message RAM is organized in 4-byte words. When received data is stored into a message buffer's data section, the number of 2-byte data words written into the message buffer is the FLXAnFRRDHS2.PLC[6:0] bits rounded to the next even value.
2. The FLXAnFRRDHS2.PLC[6:0] bits should be configured identical for all message buffers belonging to the receive FIFO. Header 2 is updated from data frames only.
   For message buffers belonging to the Static Buffer area or Static and Dynamic Buffer area, the FLXAnFRWRHS2 register is updated from data frames only.

18.2.11.4 FLXAnFRRDHS3 — FlexRay Read Header Section Register 3

CAUTION

For message buffers belonging to the Static Buffer area or Static and Dynamic Buffer area, the FLXAnFRWRHS3 register is updated from data frames only.

Access: This register can only be read in 8-, 16-, or 32-bit units.

Address: <FLXn_base> + 0708_H

Value after reset: $0000\ 0000_H$

Bit	31	30	29	28	27	26	25	24	23	22	21	20	19	18	17	16
	—	—	RES	PPI	NFI	SYN	SFI	RCI	—	—	RCC[5:0]					
Value after reset	0	0	0	0	0	0	0	0	0	0	0	0	0	0	0	0
R/W	R	R	R	R	R	R	R	R	R	R	R	R	R	R	R	R

Bit	15	14	13	12	11	10	9	8	7	6	5	4	3	2	1	0
	—	—	—	—	—	DP[10:0]										
Value after reset	0	0	0	0	0	0	0	0	0	0	0	0	0	0	0	0
R/W	R	R	R	R	R	R	R	R	R	R	R	R	R	R	R	R

Table 18.78 FLXAnFRRDHS3 Register Contents

Bit Position	Bit Name	Function
31, 30	Reserved	When read, the value after reset is read.
29	RES	Reserved Bit Indicator Flag (vRF!Header!Reserved)
28	PPI	Payload Preamble Indicator (vRF!Header!PPIndicator)
27	NFI	Null Frame Indicator Flag (vRF!Header!NFIndicator) 0: Up to now no data frame has been stored into the respective message buffer 1: At least one data frame has been stored into the respective message buffer
26	SYN	Sync Frame Indicator Flag (vRF!Header!SyFIndicator) 0: The received frame is not a sync frame 1: The received frame is a sync frame
25	SFI	Startup Frame Indicator Flag (vRF!Header!SuFIndicator) 0: The received frame is not a startup frame 1: The received frame is a startup frame
24	RCI	Received on Channel Indicator Flag (vSS!Channel) 0: Frame received on channel B 1: Frame received on channel A
23, 22	Reserved	When read, the value after reset is read.
21 to 16	RCC[5:0]	Receive Cycle Counter (vRF!Header!CycleCount)
15 to 11	Reserved	When read, the value after reset is read.
10 to 0	DP[10:0]	Data Pointer Flag

(1) FLXAnFRRDHS3.RES

Reserved Bit Flag (vRF!Header!Reserved)

Reflects the state of the received reserved bit. The reserved bit is transmitted as 0.

(2) FLXAnFRRDHS3.PPI

Payload Preamble Indicator Flag (vRF!Header!PPIndicator)

The payload preamble indicator defines whether a network management vector or message ID is contained within the payload segment of the received frame.

0 = The payload segment of the received frame does not contain a network management vector nor a message ID

1 = Static segment: Network management vector in the first part of the payload
Dynamic segment: Message ID in the first part of the payload

(3) FLXAnFRRDHS3.NFI

Null Frame Indicator Flag (vRF!Header!NFIndicator)

Is set to 1 after storage of the first received data frame.

(4) FLXAnFRRDHS3.SYN

Sync Frame Indicator Flag (vRF!Header!SyFIndicator)

A sync frame is marked by the sync frame indicator.

(5) FLXAnFRRDHS3.SFI

Startup Frame Indicator Flag (vRF!Header!SuFIndicator)

A startup frame is marked by the startup frame indicator.

(6) FLXAnFRRDHS3.RCI

Received on Channel Indicator Flag (vSS!Channel)

Indicates the channel from which the received data frame was taken to update the respective receive buffer.

(7) FLXAnFRRDHS3.RCC

Receive Cycle Counter (vRF!Header!CycleCount)

Cycle counter value updated from received data frame.

(8) FLXAnFRRDHS3.DP

Data Pointer Flag

Pointer to the first 32-bit word of the data section of the addressed message buffer in the Message RAM.

The bit value is the same as that set in bit FLXAnFRWRHS3.DP

18.2.11.5 FLXAnFRMBS — FlexRay Message Buffer Status Register

The message buffer status is updated by the CC with respect to the assigned channel(s) latest at the end of the slot following the slot assigned to the message buffer.

The flags are updated only when the CC is in NORMAL_ACTIVE or NORMAL_PASSIVE state.

If only one channel (A or B) is assigned to a message buffer, the channel-specific status flags of the other channel are written to zero. If both channels are assigned to a message buffer, the channel-specific status flags of both channels are updated.

The message buffer status is updated only when the slot counter reached the configured frame ID and when the cycle counter filter matched. When the Host updates a message buffer via Input Buffer, all FLXAnFRMBS flags are reset to zero independent of which FLXAnFRIBCM bits are set or not.

For details about receive / transmit filtering see **Section 18.3.8, Filtering and Masking**, **Section 18.3.9, Transmit Process** and **Section 18.3.10, Receive Process**.

Whenever the Message Handler changes one of the flags FLXAnFRMBS.VFRA, FLXAnFRMBS.VFRB, FLXAnFRMBS.SEOA, FLXAnFRMBS.SEOB, FLXAnFRMBS.CEOA, FLXAnFRMBS.CEOB, FLXAnFRMBS.SVOA, FLXAnFRMBS.SVOB, FLXAnFRMBS.TCIA, FLXAnFRMBS.TCIB, FLXAnFRMBS.ESA, FLXAnFRMBS.ESB, FLXAnFRMBS.MLST, FLXAnFRMBS.FTA, FLXAnFRMBS.FTB the respective message buffer's MBC flag in registers FLXAnFRMBSC1 to FLXAnFRMBSC4 is set.

Access: This register can only be read in 8-, 16-, or 32-bit units.

Address: <FLXn_base> + $070C_H$

Value after reset: $0000\ 0000_H$

Bit	31	30	29	28	27	26	25	24	23	22	21	20	19	18	17	16
	—	—	RESS	PPIS	NFIS	SYNS	SFIS	RCIS	—	—	CCS[5:0]					
Value after reset	0	0	0	0	0	0	0	0	0	0	0	0	0	0	0	0
R/W	R	R	R	R	R	R	R	R	R	R	R	R	R	R	R	R

Bit	15	14	13	12	11	10	9	8	7	6	5	4	3	2	1	0
	FTB	FTA	—	MLST	ESB	ESA	TCIB	TCIA	SVOB	SVOA	CEOB	CEOA	SEOB	SEOA	VFRB	VFRA
Value after reset	0	0	0	0	0	0	0	0	0	0	0	0	0	0	0	0
R/W	R	R	R	R	R	R	R	R	R	R	R	R	R	R	R	R

Table 18.79 FLXAnFRMBS Register Contents (1/2)

Bit Position	Bit Name	Function
31, 30	Reserved	When read, the value after reset is read.
29	RESS	Reserved Bit Status Flag (vRF!Header!Reserved)
28	PPIS	Payload Preamble Indicator Status Flag (vRF!Header!PPIndicator) 0: PPI indicator set to 0 1: PPI indicator set to 1
27	NFIS	Null Frame Indicator Status Flag (vRF!Header!NFIndicator) 0: Received frame is a null frame 1: Received frame is not a null frame
26	SYNS	Sync Frame Indicator Status Flag (vRF!Header!SyFIndicator) 0: No sync frame received 1: The received frame is a sync frame

Table 18.79 FLXAnFRMBS Register Contents (2/2)

Bit Position	Bit Name	Function
25	SFIS	Startup Frame Indicator Status Flag (vRF!Header!SuFIndicator) 0: No startup frame received 1: The received frame is a startup frame
24	RCIS	Received on Channel Indicator Status Flag (vSS!Channel) 0: Frame received on channel B 1: Frame received on channel A
23, 22	Reserved	When read, the value after reset is read.
21 to 16	CCS[5:0]	Cycle Count Status Flag
15	FTB	Frame Transmitted on Channel B Flag 0: No data frame transmitted on channel B 1: Data frame transmitted on channel B
14	FTA	Frame Transmitted on Channel A Flag 0: No data frame transmitted on channel A 1: Data frame transmitted on channel A
13	Reserved	When read, the value after reset is read.
12	MLST	Message Lost Flag 0: No message lost 1: Unprocessed message was overwritten
11	ESB	Empty Slot Channel B Flag 0: Bus activity detected in the assigned slot on channel B 1: No bus activity detected in the assigned slot on channel B
10	ESA	Empty Slot Channel A Flag 0: Bus activity detected in the assigned slot on channel A 1: No bus activity detected in the assigned slot on channel A
9	TCIB	Transmission Conflict Indication Channel B Flag (vSS!TxConflictB) 0: No transmission conflict occurred on channel B 1: Transmission conflict occurred on channel B
8	TCIA	Transmission Conflict Indication Channel A Flag (vSS!TxConflictA) 0: No transmission conflict occurred on channel A 1: Transmission conflict occurred on channel A
7	SVOB	Slot Boundary Violation Observed on Channel B Flag (vSS!BViolationB) 0: No slot boundary violation observed on channel B 1: Slot boundary violation observed on channel B
6	SVOA	Slot Boundary Violation Observed on Channel A Flag (vSS!BViolationA) 0: No slot boundary violation observed on channel A 1: Slot boundary violation observed on channel A
5	CEOB	Content Error Observed on Channel B Flag (vSS!ContentErrorB) 0: No content error observed on channel B 1: Content error observed on channel B
4	CEOA	Content Error Observed on Channel A Flag (vSS!ContentErrorA) 0: No content error observed on channel A 1: Content error observed on channel A
3	SEOB	Syntax Error Observed on Channel B Flag (vSS!SyntaxErrorB) 0: No syntax error observed on channel B 1: Syntax error observed on channel B
2	SEOA	Syntax Error Observed on Channel A Flag (vSS!SyntaxErrorA) 0: No syntax error observed on channel A 1: Syntax error observed on channel A
1	VFRB	Valid Frame Received on Channel B (vSS!ValidFrameB) 0: No valid frame received on channel B 1: Valid frame received on channel B
0	VFRA	Valid Frame Received on Channel A Flag (vSS!ValidFrameA) 0: No valid frame received on channel A 1: Valid frame received on channel A

(1) FLXAnFRMBS.RESS

Reserved Bit Status Flag (vRF!Header!Reserved)

Reflects the state of the received reserved bit. The reserved bit is transmitted as 0.

For receive buffers (bit FLXAnFRWRHS1.CFG = 0) this bit is updated from both valid data and null frames. If no valid frame was received, the previous value is maintained. For transmit buffers the flag has no meaning and should be ignored.

(2) FLXAnFRMBS.PPIS

Payload Preamble Indicator Status Flag (vRF!Header!PPIndicator)

The payload preamble indicator defines whether a network management vector or message ID is contained within the payload segment of the received frame.

For receive buffers (bit FLXAnFRWRHS1.CFG = 0) this bit is updated from both valid data and null frames. If no valid frame was received, the previous value is maintained. For transmit buffers the flag has no meaning and should be ignored.

0 = PPI indicator set to 0
The payload segment of the received frame does not contain a network management vector or a message ID

1 = PPI indicator set to 1
Static segment: Network management vector at the beginning of the payload
Dynamic segment: Message ID at the beginning of the payload

(3) FLXAnFRMBS.NFIS

Null Frame Indicator Status Flag (vRF!Header!NFIndicator)

If set to 0 the payload segment of the received frame contains no usable data.

For receive buffers (bit FLXAnFRWRHS1.CFG = 0) this bit is updated from both valid data and null frames. If no valid frame was received, the previous value is maintained. For transmit buffers the flag has no meaning and should be ignored.

(4) FLXAnFRMBS.SYNS

Sync Frame Indicator Status Flag (vRF!Header!SyFIndicator)

A sync frame is marked by the sync frame indicator.

For receive buffers (bit FLXAnFRWRHS1.CFG = 0) this bit is updated from both valid data and null frames. If no valid frame was received, the previous value is maintained. For transmit buffers the flag has no meaning and should be ignored.

(5) FLXAnFRMBS.SFIS

Startup Frame Indicator Status Flag (vRF!Header!SuFIndicator)

The startup frame indicator specifies a startup frame.

For receive buffers (bit FLXAnFRWRHS1.CFG = 0) this bit is updated from both valid data and null frames. If no valid frame was received, the previous value is maintained. For transmit buffers the flag has no meaning and should be ignored.

(6) FLXAnFRMBS.RCIS

Received on Channel Indicator Status Flag (vSS!Channel)

Indicates the channel on which the frame was received.

For receive buffers (bit FLXAnFRWRHS1.CFG = 0) this bit is updated from both valid data and null frames. If no valid frame was received, the previous value is maintained. For transmit buffers the flag has no meaning and should be ignored.

(7) FLXAnFRMBS.CCS

Cycle Count Status Flag

Actual cycle count when status was updated.

(8) FLXAnFRMBS.FTB

Frame Transmitted on Channel B Flag

Indicates that this node has transmitted a data frame in the configured slot on channel B.

CAUTION

The FlexRay protocol specification requires that this bit can only be reset by the Host. Therefore, the Cycle Count Status FLXAnFRMBS.CCS bit for this bit is only valid for the cycle where the bit is set to 1.

(9) FLXAnFRMBS.FTA

Frame Transmitted on Channel A Flag

Indicates that this node has transmitted a data frame in the configured slot on channel A.

CAUTION

The FlexRay protocol specification requires that this bit can only be reset by the Host. Therefore the Cycle Count Status FLXAnFRMBS.CCS bit for this bit is only valid for the cycle where this bit is set to 1.

(10) FLXAnFRMBS.MLST

Message Lost Flag

The flag is set in case the Host did not read the message before the message buffer was updated from a received data frame.

Not affected by reception of null frames except for message buffers belonging to the receive FIFO. Bit FLXAnFRNDATm.ND is reset to 0 by a Host write to the message buffer via IBF or when a new message is stored into the message buffer after the message buffers ND flag was reset to 0 by reading out the message buffer via OBF.

(11) FLXAnFRMBS.ESB

Empty Slot Channel B Flag

In an empty slot, there is no activity on the bus. This means that any frame transmission is not detected. This state can be checked in static and dynamic slots.

(12) FLXAnFRMBS.ESA

Empty Slot Channel A Flag

In an empty slot, there is no activity on the bus. This means that any frame transmission is not detected. This state can be checked in static and dynamic slots.

(13) FLXAnFRMBS.TCIB

Transmission Conflict Indication Channel B Flag (vSS!TxConflictB)

A transmission conflict indication is set to 1 if a transmission conflict has occurred on channel B.

(14) FLXAnFRMBS.TCIA

Transmission Conflict Indication Channel A Flag (vSS!TxConflictA)

A transmission conflict indication is set if a transmission conflict has occurred on channel A.

(15) FLXAnFRMBS.SVOB

Slot Boundary Violation Observed on Channel B Flag (vSS!BViolationB)

A slot boundary violation (channel active at the start or at the end of the assigned slot) was observed on channel B.

(16) FLXAnFRMBS.SVOA

Slot Boundary Violation Observed on Channel A Flag (vSS!BViolationA)

A slot boundary violation (channel active at the start or at the end of the assigned slot) was observed on channel A.

(17) FLXAnFRMBS.CEOB

Content Error Observed on Channel B Flag (vSS!ContentErrorB)

A content error was observed in the assigned slot on channel B.

(18) FLXAnFRMBS.CEOA

Content Error Observed on Channel A Flag (vSS!ContentErrorA)

A content error was observed in the assigned slot on channel A.

(19) FLXAnFRMBS.SEOB

Syntax Error Observed on Channel B Flag (vSS!SyntaxErrorB)

A syntax error was observed in the assigned slot on channel B.

(20) FLXAnFRMBS.SEOA

Syntax Error Observed on Channel A Flag (vSS!SyntaxErrorA)

A syntax error was observed in the assigned slot on channel A.

(21) FLXAnFRMBS.VFRB

Valid Frame Received on Channel B Flag (vSS!ValidFrameB)

A valid frame indication is set if a valid frame was received on channel B.

(22) FLXAnFRMBS.VFRA

Valid Frame Received on Channel A Flag (vSS!ValidFrameA)

A valid frame indication is set if a valid frame was received on channel A.

18.2.11.6 FLXAnFROBCM — FlexRay Output Buffer Command Mask Register

Configures how the Output Buffer is updated from the message buffer in the Message RAM selected by bits FLXAnFROBCR.OBRS[6:0].

Mask bits FLXAnFROBCM.RDSS and FLXAnFROBCM.RHSS are copied to the register internal storage when a Message RAM transfer is requested by bit FLXAnFROBCR.REQ.

When OBF Host and OBF Shadow are swapped, mask bits FLXAnFROBCM.RDSH and FLXAnFROBCM.RHSH are swapped with the register internal storage to keep them attached to the respective Output Buffer transfer.

The data transfer between Output Buffer and Message RAM is described in detail in **Section 18.3.12.2 (2), Data Transfer from Message RAM to Output Buffer**.

CAUTION

After the transfer of the header section from the Message RAM to OBF Shadow has completed, the message buffer status changed flag MBC of the selected message buffer in the FLXAnFRMBSC1 to FLXAnFRMBSC4 registers is cleared. After the transfer of the data section from the Message RAM to OBF Shadow has completed, the new data flag ND of the selected message buffer in the FLXAnFRNDAT1 to FLXAnFRNDAT4 registers is cleared.

Access: This register can be read/written in 8-, 16-, or 32-bit units.

Address: <FLXn_base> + 0710_H

Value after reset: $0000\ 0000_H$

Bit	31	30	29	28	27	26	25	24	23	22	21	20	19	18	17	16
	—	—	—	—	—	—	—	—	—	—	—	—	—	—	RDSH	RHSH
Value after reset	0	0	0	0	0	0	0	0	0	0	0	0	0	0	0	0
R/W	R	R	R	R	R	R	R	R	R	R	R	R	R	R	R	R

Bit	15	14	13	12	11	10	9	8	7	6	5	4	3	2	1	0
	—	—	—	—	—	—	—	—	—	—	—	—	—	—	RDSS	RHSS
Value after reset	0	0	0	0	0	0	0	0	0	0	0	0	0	0	0	0
R/W	R	R	R	R	R	R	R	R	R	R	R	R	R	R	R/W	R/W

Table 18.80 FLXAnFROBCM Register Contents

Bit Position	Bit Name	Function
31 to 18	Reserved	When read, the value after reset is read. When writing, write the value after reset.
17	RDSH	Read Data Section Host Flag 0: Data section is not read 1: Data section selected for transfer from Message RAM to Output Buffer
16	RHSH	Read Header Section Host Flag 0: Header section is not read 1: Header section selected for transfer from Message RAM to Output Buffer
15 to 2	Reserved	When read, the value after reset is read. When writing, write the value after reset.
1	RDSS	Read Data Section Shadow Bit 0: Data section is not read 1: Data section selected for transfer from Message RAM to Output Buffer
0	RHSS	Read Header Section Shadow Bit 0: Header section is not read 1: Header section selected for transfer from Message RAM to Output Buffer

(1) FLXAnFROBCM.RDSH

Read Data Section Host Flag

(2) FLXAnFROBCM.RHSH

Read Header Section Host Flag

(3) FLXAnFROBCM.RDSS

Read Data Section Shadow Bit

(4) FLXAnFROBCM.RHSS

Read Header Section Shadow Bit

18.2.11.7 FLXAnFROBCR — FlexRay Output Buffer Command Request Register

After setting bit FLXAnFROBCR.REQ to 1 while FLXAnFROBCR.OBSYS is 0, FLXAnFROBCR.OBSYS is automatically set to 1, bits FLXAnFROBCR.OBRS[6:0] is copied to the register internal storage, mask bits FLXAnFROBCM.RDSS and FLXAnFROBCM.RHSS are copied to register FLXAnFROBCM internal storage, and the transfer of the message buffer selected by bits FLXAnFROBCR.OBRS[6:0] from the Message RAM to OBF Shadow is started. When the transfer between the Message RAM and OBF Shadow has completed, this is signaled by setting FLXAnFROBCM.OBSYS back to 0.

By setting bit FLXAnFROBCR.VIEW to 1 while FLXAnFROBCR.OBSYS is 0, OBF Host and OBF Shadow are swapped. Additionally mask bits FLXAnFROBCM.RDSH and FLXAnFROBCM.RHSH are swapped with the register FLXAnFROBCM internal storage to keep them attached to the respective Output Buffer transfer. bits FLXAnFROBCR.OBRH[6:0] signals the number of the message buffer currently accessible by the Host.

If bits FLXAnFROBCR.REQ and FLXAnFROBCR.VIEW are set to 1 with the same write access while FLXAnFROBCR.OBSYS is 0, FLXAnFROBCR.OBSYS is automatically set to 1 and OBF Shadow and OBF Host are swapped. Additionally mask bits FLXAnFROBCM.RDSH and FLXAnFROBCM.RHSH are swapped with the registers internal storage to keep them attached to the respective Output Buffer transfer. Afterwards FLXAnFROBCR.OBRS is copied to the register internal storage, and the transfer of the selected message buffer from the Message RAM to OBF Shadow is started. While the transfer is ongoing the Host can read the message buffer transferred by the previous transfer from OBF Host. When the current transfer between Message RAM and OBF Shadow has completed, this is signaled by setting FLXAnFROBCR.OBSYS back to 0.

Any write access to bits FLXAnFROBCR[15:8] while FLXAnFROBCR.OBSYS is set to 1 will cause bit FLXAnFREIR.IOBA to be set to 1. n this case, this write access has no effect and the Output Buffer will not be changed.

The data transfer between Output Buffer and Message RAM is described in detail in **Section 18.3.12.2 (2), Data Transfer from Message RAM to Output Buffer**.

Access: This register can be read/written in 8-, 16-, or 32-bit units.

Address: <FLXn_base> + 0714_H

Value after reset: $0000\ 0000_H$

Bit	31	30	29	28	27	26	25	24	23	22	21	20	19	18	17	16
	—	—	—	—	—	—	—	—	—	OBRH[6:0]						
Value after reset	0	0	0	0	0	0	0	0	0	0	0	0	0	0	0	0
R/W	R	R	R	R	R	R	R	R	R	R	R	R	R	R	R	R

Bit	15	14	13	12	11	10	9	8	7	6	5	4	3	2	1	0
	OBSYS	—	—	—	—	—	REQ	VIEW	—	OBRS[6:0]						
Value after reset	0	0	0	0	0	0	0	0	0	0	0	0	0	0	0	0
R/W	R	R	R	R	R	R	R/W	R/W	R	R/W	R/W	R/W	R/W	R/W	R/W	R/W

Table 18.81 FLXAnFROBCR Register Contents

Bit Position	Bit Name	Function
31 to 23	Reserved	When read, the value after reset is read. When writing, write the value after reset.
22 to 16	OBRH[6:0]	Output Buffer Request Host Flag
15	OBSYS	Output Buffer Busy Shadow Flag 0: No transfer in progress 1: Transfer between Message RAM and OBF Shadow in progress
14 to 10	Reserved	When read, the value after reset is read. When writing, write the value after reset.
9	REQ	Request Message RAM Transfer Bit 0: No request 1: Transfer to OBF Shadow requested
8	VIEW	View Shadow Buffer Bit 0: No action 1: Swap OBF Shadow and OBF Host
7	Reserved	When read, the value after reset is read. When writing, write the value after reset.
6 to 0	OBRS[6:0]	Output Buffer Request Shadow Bit

(1) FLXAnFROBCR.OBRH

Output Buffer Request Host Flag

Number of message buffer currently accessible by the Host via the FLXAnFRRDHS1 to FLXAnFRRDHS3, FLXAnFRMBS, and FLXAnFRRDDS1 to FLXAnFRRDDS64 registers.

By writing bit FLXAnFROBCR.VIEW to 1 OBF Shadow and OBF Host are swapped and the transferred message buffer is accessible by the Host.

(2) FLXAnFROBCR.OBSYS

Output Buffer Busy Shadow Flag

Set to 1 after setting bit FLXAnFROBCR.REQ. When the transfer between the Message RAM and OBF Shadow has completed, FLXAnFROBCR.OBSYS is set back to 0.

(3) FLXAnFROBCR.REQ

Request Message RAM Transfer Bit

Only writeable while bit FLXAnFROBCR.OBSYS = 0.

Requests transfer of message buffer addressed by bits FLXAnFROBCR.OBRS[6:0] from Message RAM to OBF Shadow.

(4) FLXAnFROBCR.VIEW

View Shadow Buffer Bit

Only writeable while bit FLXAnFROBCR.OBSYS = 0.

Toggles between OBF Shadow and OBF Host.

(5) FLXAnFROBCR.OBRS

Output Buffer Request Shadow Bit

Only writeable while bit FLXAnFROBCR.OBSYS = 0.

Number of source message buffer to be transferred from the Message RAM to OBF Shadow.

If the number of the first message buffer of the receive FIFO is written to this register the Message Handler transfers the message buffer addressed by the GET Index (GIDX, see **Section 18.3.11, FIFO Function**) to OBF Shadow.

18.2.12 Data Transfer Control Register

18.2.12.1 FLXAnFRITC — FlexRay Input Transfer Configuration Register

Access: This register can be read/written in 8-, 16-, or 32-bit units.

Address: <FLXn_base> + 0800_H

Value after reset: $0000\ 0000_H$

Bit	31	30	29	28	27	26	25	24	23	22	21	20	19	18	17	16
	—	—	—	—	—	—	—	—	—	ITM[6:0]						
Value after reset	0	0	0	0	0	0	0	0	0	0	0	0	0	0	0	0
R/W	R	R	R	R	R	R	R	R	R	R/W	R/W	R/W	R/W	R/W	R/W	R/W

Bit	15	14	13	12	11	10	9	8	7	6	5	4	3	2	1	0
	—	—	—	—	—	—	IQEIE	IQFIE	—	—	—	—	—	—	IQHR	ITE
Value after reset	0	0	0	0	0	0	0	0	0	0	0	0	0	0	0	0
R/W	R	R	R	R	R	R	R/W	R/W	R	R	R	R	R	R	R/W	R/W

Table 18.82 FLXAnFRITC Register Contents

Bit Position	Bit Name	Function
31 to 23	Reserved	When read, the value after reset is read. When writing, write the value after reset.
22 to 16	ITM[6:0]	Input queue Table Max Bit These bits configure the number of entries in the input pointer table the input buffer handler is capable to maintain in the input queue.
15 to 10	Reserved	When read, the value after reset is read. When writing, write the value after reset.
9	IQEIE	Input Queue Empty Interrupt Enable Bit 0: Disabled 1: Enabled
8	IQFIE	Input Queue Full Interrupt Enable Bit 0: Disabled 1: Enabled
7 to 2	Reserved	When read, the value after reset is read. When writing, write the value after reset.
1	IQHR	Input Queue Halt Request Bit 0: Input queue run request 1: Input queue halt request
0	ITE	Input Transfer Enable Bit 0: Operation Disable request 1: Operation Enable request

(1) FLXAnFRITC.ITM

Input queue Table Max Bit

The user can only write to this bit when bit FLXAnFRITS.ITS is 0.

These bits configure the number of entries in the input pointer table the input buffer handler is capable to maintain in the input queue.

Valid values are 00_H (1 queue entry) to $7F_H$ (128 queue entries).

Note that each entry requires two long words in the input pointer table.

(2) FLXAnFRITC.IQEIE

Input Queue Empty Interrupt Enable Bit

This bit controls the input queue empty interrupt.

0: Disabled
No interrupt will be generated and the input queue empty interrupt line will be released.

1: Enabled
Input queue empty interrupt will be generated when bit FLXAnFRITS.IQEIS is 1.

(3) FLXAnFRITC.IQFIE

Input Queue Full Interrupt Enable Bit

This bit controls the input queue full interrupt.

0: Disabled
No interrupt will be generated and the input queue full interrupt line will be released.

1: Enabled
Input queue full interrupt will be generated when bit FLXAnFRITS.IQFIS is 1.

(4) FLXAnFRITC.IQHR

Input Queue Halt Request Bit

The IQHR bit should not be set to 1 when FLXAnFRITS.ITS is 0.

This bit requests a halt of the input queue.

The status of the halt request is shown in the FLXAnFRITS.IQH register.

Refer to **Section 18.3.16.1 (5), Halting the input queue** about usage of this bit.

0: Input queue run request
The input queue resumes their operation.

1: Input queue halt request
The input queue gets halted. An active input transfer will be completed but no further transfer request will start.

(5) FLXAnFRITC.ITE

Input Transfer Enable Bit

The user should only set this bit to 1 when bit FLXAnFRIBCR.IBSYS is 0.

The user should only set this bit to 0 when bit FLXAnFRITC.IQHR is 0. Otherwise committed input transfers get lost.

This bit controls the operation mode of the input transfer queue.

The operation status of the input transfer queue function is shown in bit FLXAnFRITS.ITS.

Refer to **Section 18.3.16.1 (1), Activation and deactivation** about usage of this bit.

0: Operation Disable request
The input transfer queue is disabled when it becomes empty.

1: Operation Enable request
The input transfer queue is enabled. Input data structures are transferred to the FlexRay internal message RAM.

18.2.12.2 FLXAnFROTC — FlexRay Output Transfer Configuration Register

Access: This register can be read/written in 8-, 16-, or 32-bit units.

Address: <FLXn_base> + 0804_H

Value after reset: $0000\ 0000_H$

Bit	31	30	29	28	27	26	25	24	23	22	21	20	19	18	17	16
	—	—	—	—	—	—	—	—	—	—	—	FTM[4:0]				
Value after reset	0	0	0	0	0	0	0	0	0	0	0	0	0	0	0	0
R/W	R	R	R	R	R	R	R	R	R	R	R	R/W	R/W	R/W	R/W	R/W

Bit	15	14	13	12	11	10	9	8	7	6	5	4	3	2	1	0
	—	—	—	—	FWIE	OWIE	FIE	OIE	—	—	—	—	—	—	OTCS	OTE
Value after reset	0	0	0	0	0	0	0	0	0	0	0	0	0	0	0	0
R/W	R	R	R	R	R/W	R/W	R/W	R/W	R	R	R	R	R	R	R/W	R/W

Table 18.83 FLXAnFROTC Register Contents

Bit Position	Bit Name	Function
31 to 21	Reserved	When read, the value after reset is read. When writing, write the value after reset.
20 to 16	FTM[4:0]	FIFO Table Max Bit Configures the number of FIFO entries the output transfer handler is capable to maintain in the local RAM.
15 to 12	Reserved	When read, the value after reset is read. When writing, write the value after reset.
11	FWIE	FIFO transfer Warning Interrupt Enable Bit 0: Disabled 1: Enabled
10	OWIE	Output transfer Warning Interrupt Enable Bit 0: Disabled 1: Enabled
9	FIE	FIFO transfer Interrupt Enable Bit 0: Disabled 1: Enabled
8	OIE	Output transfer Interrupt Enable Bit 0: Disabled 1: Enabled
7 to 2	Reserved	When read, the value after reset is read. When writing, write the value after reset.
1	OTCS	Output Transfer Condition Select Bit 0: New data only mode 1: New data and status changed mode
0	OTE	Output Transfer Enable Bit 0: Operation Disable request 1: Operation Enable request

(1) FLXAnFROTC.FTM

FIFO Table Max Bit

The user can only write to these bits when bit FLXAnFROTS.OTS is 0.

Configures the number of FIFO entries the output transfer handler is capable to maintain in the local RAM.

Valid values are 00_H (1 FIFO entry) to $1F_H$ (32 FIFO entries).

(2) FLXAnFROTC.FWIE

FIFO transfer Warning Interrupt Enable Bit

This bit controls the FIFO transfer warning interrupt.

0: Disabled
No interrupt will be generated and the FIFO transfer warning interrupt line will be released.

1: Enabled
FIFO transfer warning interrupt will be generated when bit FLXAnFROTS.FWIS is 1.

(3) FLXAnFROTC.OWIE

Output transfer Warning Interrupt Enable Bit

This bit controls the output transfer warning interrupt.

0: Disabled
No interrupt will be generated and the output transfer warning interrupt line will be released.

1: Enabled
Output transfer warning interrupt will be generated when bit FLXAnFROTS.OWIS is 1.

(4) FLXAnFROTC.FIE

FIFO transfer Interrupt Enable Bit

This bit controls the FIFO transfer interrupt.

0: Disabled
No interrupt will be generated and the FIFO transfer interrupt line will be released.

1: Enabled
FIFO transfer interrupt will be generated when bit FLXAnFROTS.FIS is 1.

(5) FLXAnFROTC.OIE

Output transfer Interrupt Enable Bit

This bit controls the output transfer interrupt.

0: Disabled
No interrupt will be generated and the output transfer interrupt line will be released.

1: Enabled
Output transfer interrupt will be generated when bit FLXAnFROTS.OTIS is 1.

(6) FLXAnFROTC.OTCS

Output Transfer Condition Select Bit

The user can only write to this bit when bit FLXAnFROTS.OTS is 0.

This bit controls the output transfer condition.

0: New data only mode
The NDp bits in the FLXAnFRNDATm registers are used to detect a transfer condition for dedicated receive buffer.

1: New data and status changed mode
Bits FLXAnFRNDATm.NDp and FLXAnFRMBSCm.MBSp are used to detect a transfer condition for dedicated transmit and receive buffer.

(7) FLXAnFROTC.OTE

Output Transfer Enable Bit

The user should only set this bit to 1 when bit FLXAnFROBCR.OBSYS is 0.

This bit controls the operation mode of the output transfer function.

The operation status of the output buffer transfer function is shown in FLXAnFROTS.OTS.

Refer to **18.3.16.2**, **(1) Activation and deactivation** about usage of this bit.

0: Operation Disable request
The output buffer transfer gets disabled.
An active message buffer transfer will be completed but no further transfer will start.

1: Operation Enable request
The output buffer transfer gets enabled. Message buffers are transferred from the FlexRay internal message RAM to output data structures.

The user should not change the E-Ray message RAM configuration by writing to the FLXAnFRMRC register.

18.2.12.3 FLXAnFRIBA — FlexRay Input Pointer Table Base Address Register

Access: This register can be read/written in 8-, 16-, or 32-bit units.

Address: <FLXn_base> + 0808_H

Value after reset: $0000\ 0000_H$

Bit	31	30	29	28	27	26	25	24	23	22	21	20	19	18	17	16
	ITA[31:16]															
Value after reset	0	0	0	0	0	0	0	0	0	0	0	0	0	0	0	0
R/W	R/W	R/W	R/W	R/W	R/W	R/W	R/W	R/W	R/W	R/W	R/W	R/W	R/W	R/W	R/W	R/W

Bit	15	14	13	12	11	10	9	8	7	6	5	4	3	2	1	0
	ITA[15:0]															
Value after reset	0	0	0	0	0	0	0	0	0	0	0	0	0	0	0	0
R/W	R/W	R/W	R/W	R/W	R/W	R/W	R/W	R/W	R/W	R/W	R/W	R/W	R/W	R/W	R	R

Table 18.84 FLXAnFRIBA Register Contents

Bit Position	Bit Name	Function
31 to 0	ITA[31:0]	Input Table Base Address Bit These bits configure the base address of the input pointer table.

(1) FLXAnFRIBA.ITA

Input Table Base Address Bit

The user can only write to this bit when FLXAnFRITS.ITS is 0.

The address should be 32 bit aligned, thus the bits FLXAnFRIBA.ITA[1:0] are always 0.

These bits configure the base address of the input pointer table.

The table is used for the input transfer queue transferring message buffers from the local RAM into the FlexRay internal message RAM.

The size of the input queue is configured in bits FLXAnFRITC.ITM[6:0].

Note that each entry requires two long words in the input pointer table.

18.2.12.4 FLXAnFRFBA — FlexRay FIFO Pointer Table Base Address Register

Access: This register can be read/written in 8-, 16-, or 32-bit units.

Address: <FLXn_base> + $080C_H$

Value after reset: $0000\ 0000_H$

Bit	31	30	29	28	27	26	25	24	23	22	21	20	19	18	17	16
	FTA[31:16]															
Value after reset	0	0	0	0	0	0	0	0	0	0	0	0	0	0	0	0
R/W	R/W	R/W	R/W	R/W	R/W	R/W	R/W	R/W	R/W	R/W	R/W	R/W	R/W	R/W	R/W	R/W

Bit	15	14	13	12	11	10	9	8	7	6	5	4	3	2	1	0
	FTA[15:0]															
Value after reset	0	0	0	0	0	0	0	0	0	0	0	0	0	0	0	0
R/W	R/W	R/W	R/W	R/W	R/W	R/W	R/W	R/W	R/W	R/W	R/W	R/W	R/W	R/W	R	R

Table 18.85 FLXAnFRFBA Register Contents

Bit Position	Bit Name	Function
31 to 0	FTA[31:0]	FIFO pointer Table Base Address Bit These bits configure the base address of the FIFO pointer table.

(1) FLXAnFRFBA.FTA

FIFO pointer Table Base Address Bit

The user can only write to this bit when FLXAnFROTS.OTS is 0.

The address should be 32 bit aligned, thus the bits FLXAnFRFBA.FTA[1:0] are always 0.

These bits configure the base address of the FIFO pointer table.

The table is used for message buffers transferred from the FlexRay internal FIFO to the local RAM.

The size of the FIFO is configured in bits FLXAnFROTC.FTM[4:0].

18.2.12.5 FLXAnFROBA — FlexRay Output Pointer Table Base Address Register

Access: This register can be read/written in 8-, 16-, or 32-bit units.

Address: <FLXn_base> + 0810_H

Value after reset: $0000\ 0000_H$

Bit	31	30	29	28	27	26	25	24	23	22	21	20	19	18	17	16
	OTA[31:16]															
Value after reset	0	0	0	0	0	0	0	0	0	0	0	0	0	0	0	0
R/W	R/W	R/W	R/W	R/W	R/W	R/W	R/W	R/W	R/W	R/W	R/W	R/W	R/W	R/W	R/W	R/W

Bit	15	14	13	12	11	10	9	8	7	6	5	4	3	2	1	0
	OTA[15:0]															
Value after reset	0	0	0	0	0	0	0	0	0	0	0	0	0	0	0	0
R/W	R/W	R/W	R/W	R/W	R/W	R/W	R/W	R/W	R/W	R/W	R/W	R/W	R/W	R/W	R	R

Table 18.86 FLXAnFROBA Register Contents

Bit Position	Bit Name	Function
31 to 0	OTA[31:0]	Output pointer Table Base Address Bit These bits configure the base address of the output pointer table.

(1) FLXAnFROBA.OTA

Output pointer Table Base Address Bit

The user can only write to this bit when FLXAnFROTS.OTS is 0.

The address should be 32 bit aligned, thus the bits FLXAnFROBA.OTA[1:0] are always 0.

These bits configure the base address of the output pointer table.

The table is used for message buffers transferred from the FlexRay internal message RAM to the local RAM.

The size of the table depends on the utilization of the FlexRay internal message RAM and can have up to 128 entries.

18.2.12.6 FLXAnFRIQC — FlexRay Input Queue Control Register

Access: This register can only be written in 8-, 16-, or 32-bit units.

Address: <FLXn_base> + 0814_H

Value after reset: $0000\ 0000_H$

Bit	31	30	29	28	27	26	25	24	23	22	21	20	19	18	17	16
	—	—	—	—	—	—	—	—	—	—	—	—	—	—	—	—
Value after reset	0	0	0	0	0	0	0	0	0	0	0	0	0	0	0	0
R/W	R	R	R	R	R	R	R	R	R	R	R	R	R	R	R	R

Bit	15	14	13	12	11	10	9	8	7	6	5	4	3	2	1	0
	—	—	—	—	—	—	—	—	—	IMBNR[6:0]						
Value after reset	0	0	0	0	0	0	0	0	0	0	0	0	0	0	0	0
R/W	R	R	R	R	R	R	R	R	R	W	W	W	W	W	W	W

Table 18.87 FLXAnFRIQC Register Contents

Bit Position	Bit Name	Function
31 to 7	Reserved	When writing, write the value after reset.
6 to 0	IMBNR[6:0]	Input Message Buffer NumbeR Bit Message buffer number added to the input queue

(1) FLXAnFRIQC.IMBNR

Input Message Buffer NumbeR Bit

The user can only write to this bit when FLXAnFRITS.IQFP is 0.

The user should not write to this register when FLXAnFRITS.ITS is 0 or when FLXAnFRITC.ITE is 0.

These bits are read as 0.

This value specifies the message buffer added to the input queue.

The number has to be identical to FLXAnFRWRHS4.IMBNR[6:0] (see **Section 18.3.16.1 (3), Input pointer table**) of the input pointer table.

The address to the input data structure has to be provided in the input pointer table at the put index (bit FLXAnFRITS.IPIDX[6:0]) before writing to this register.

Writing to this register increments the input put index (bit FLXAnFRITS.IPIDX[6:0]).

18.2.12.7 FLXAnFRUIR — FlexRay User Input Transfer Request Register

Access: This register can be read/written in 8-, 16-, or 32-bit units.

Address: <FLXn_base> + 0818_H

Value after reset: $0000\ 0000_H$

Bit	31	30	29	28	27	26	25	24	23	22	21	20	19	18	17	16
	—	—	—	—	—	—	—	—	—	—	—	—	—	—	—	—
Value after reset	0	0	0	0	0	0	0	0	0	0	0	0	0	0	0	0
R/W	R	R	R	R	R	R	R	R	R	R	R	R	R	R	R	R

Bit	15	14	13	12	11	10	9	8	7	6	5	4	3	2	1	0
	—	—	—	—	—	—	—	—	UIDX[7:0]							
Value after reset	0	0	0	0	0	0	0	0	0	0	0	0	0	0	0	0
R/W	R	R	R	R	R	R	R	R	R/W	R/W	R/W	R/W	R/W	R/W	R/W	R/W

Table 18.88 FLXAnFRUIR Register Contents

Bit Position	Bit Name	Function
31 to 8	Reserved	When read, the value after reset is read. When writing, write the value after reset.
7 to 0	UIDX[7:0]	User requested Input inDeX Bit Input pointer table index requested for input transfer

(1) FLXAnFRUIR.UIDX

User requested Input inDeX Bit

The user can only write to this bit when bit FLXAnFRITS.UIRP is 0.

The user should not write to this register when bit FLXAnFRITS.ITS is 0.

The user should not write to this register when bit FLXAnFRITS.UIRP is 1.

The user should not write to this register when bit FLXAnFRITS.IQH is 1.

The user should only write bits FLXAnFRITC.ITM[6:0] +1 to this register.

This value specifies the input pointer table index for the requested input transfer.

The address to the input data structure has to be provided in the input pointer table at the index FLXAnFRUIR.UIDX[7:0] before writing to this register.

When writing to this register, the requested input data structure will be transferred from input data structure position to the FlexRay internal message RAM.

In opposite to queued input transfers the related FLXAnFRDA.DA flag is not influenced by the user input transfer.

18.2.12.8 FLXAnFRUOR — FlexRay User Output Transfer Request Register

Access: This register can be read/written in 8-, 16-, or 32-bit units.

Address: <FLXn_base> + $081C_H$

Value after reset: $0000\ 0000_H$

Bit	31	30	29	28	27	26	25	24	23	22	21	20	19	18	17	16
	—	—	—	—	—	—	—	—	—	—	—	—	—	—	—	—
Value after reset	0	0	0	0	0	0	0	0	0	0	0	0	0	0	0	0
R/W	R	R	R	R	R	R	R	R	R	R	R	R	R	R	R	R

Bit	15	14	13	12	11	10	9	8	7	6	5	4	3	2	1	0
	—	—	—	—	—	—	URDS	—	—	UMBNR[6:0]						
Value after reset	0	0	0	0	0	0	0	0	0	0	0	0	0	0	0	0
R/W	R	R	R	R	R	R	R/W	R	R	R/W	R/W	R/W	R/W	R/W	R/W	R/W

Table 18.89 FLXAnFRUOR Register Contents

Bit Position	Bit Name	Function
31 to 10	Reserved	When read, the value after reset is read. When writing, write the value after reset.
9	URDS	User request Read Data Section Bit 0: Data section is not transferred 1: Data section is transferred
8, 7	Reserved	When read, the value after reset is read. When writing, write the value after reset.
6 to 0	UMBNR[6:0]	User requested output Message Buffer NumbeR Bit Message buffer number requested for output transfer

(1) FLXAnFRUOR.URDS

User request Read Data Section Bit

The user can only write to this bit when bit FLXAnFROTS.UORP is 0.

The user should not write to this register when bit FLXAnFROTS.OTS is 0.

The user should not write to this register when bit FLXAnFROTS.UORP is 1.

0: Data section is not transferred
The data section of the message buffer selected by the bits FLXAnFRUOR.UMBNR[6:0] is not requested

1: Data section is transferred
The data section of the message buffer selected by the bits FLXAnFRUOR.UMBNR[6:0] is requested

(2) FLXAnFRUOR.UMBNR

User requested output Message Buffer NumbeR Bit

The user can only write to this bit when bit FLXAnFROTS.UORP is 0.

The user should not write to this register when bit FLXAnFROTS.OTS is 0.

The user should not write to this register when bit FLXAnFROTS.UORP is 1.

The user should restrict this bit to dedicated receive and transmit buffers when the FlexRay module is not in the CONFIG state.

When writing to this register, the contents of the message buffer will be transferred to a given area. The destination will be the area specified by the value in the output pointer table.

The data to be transferred can be specified by setting the URDS bit whether to transfer the header section only or to include the data section.

18.2.12.9 FLXAnFRAHBC — FlexRay H-Bus Configuration Register

Access: This register can be read/written in 8-, 16-, or 32-bit units.

Address: <FLXn_base> + 0840_H

Value after reset: $0000\ 0000_H$

Bit	31	30	29	28	27	26	25	24	23	22	21	20	19	18	17	16
	—	—	—	—	—	—	—	—	—	—	—	—	—	—	—	—
Value after reset	0	0	0	0	0	0	0	0	0	0	0	0	0	0	0	0
R/W	R	R	R	R	R	R	R	R	R	R	R	R	R	R	R	R

Bit	15	14	13	12	11	10	9	8	7	6	5	4	3	2	1	0
	—	—	—	—	—	—	—	—	—	—	—	—	HPROT[3:0]			
Value after reset	0	0	0	0	0	0	0	0	0	0	0	0	0	0	0	0
R/W	R	R	R	R	R	R	R	R	R	R	R	R	R/W	R/W	R/W	R/W

Table 18.90 FLXAnFRAHBC Register Contents

Bit Position	Bit Name	Function
31 to 4	Reserved	When read, the value after reset is read. When writing, write the value after reset.
3 to 0	HPROT[3:0]	Protection Control Bit

(1) FLXAnFRAHBC.HPROT

Protection Control Bit

The user should only write to this register only when bit FLXAnFRITS.ITS is 0 and bit FLXAnFROTS.OTS is 0.

This register configures the value assigned to the H-Bus protection control signal.

18.2.13 Data Transfer Status Register

18.2.13.1 FLXAnFRITS — FlexRay Input Transfer Status Register

Access: This register can be read/written in 8-, 16-, or 32-bit units.

Address: <FLXn_base> + 0820_H

Value after reset: $0000\ 0000_H$

Bit	31	30	29	28	27	26	25	24	23	22	21	20	19	18	17	16
	—	IGIDX[6:0]							—	IPIDX[6:0]						
Value after reset	0	0	0	0	0	0	0	0	0	0	0	0	0	0	0	0
R/W	R	R	R	R	R	R	R	R	R	R	R	R	R	R	R	R

Bit	15	14	13	12	11	10	9	8	7	6	5	4	3	2	1	0
	—	—	—	IQFP	—	—	IQEIS	IQFIS	—	—	—	—	—	UIRP	IQH	ITS
Value after reset	0	0	0	0	0	0	0	0	0	0	0	0	0	0	0	0
R/W	R	R	R	R	R	R	R/W	R/W	R	R	R	R	R	R	R	R

Table 18.91 FLXAnFRITS Register Contents

Bit Position	Bit Name	Function
31	Reserved	When read, the value after reset is read. When writing, write the value after reset.
30 to 24	IGIDX[6:0]	Input queue Get InDeX Bit Represents the get index of the input pointer table
23	Reserved	When read, the value after reset is read. When writing, write the value after reset.
22 to 16	IPIDX[6:0]	Input queue Put InDeX Bit Represents the put index of the input pointer table
15 to 13	Reserved	When read, the value after reset is read. When writing, write the value after reset.
12	IQFP	Input Queue Full condition Pending Bit 0: Entries in the input queue are available 1: All entries in the input queue are occupied
11, 10	Reserved	When read, the value after reset is read. When writing, write the value after reset.
9	IQEIS	Input Queue Empty Interrupt Status Bit 0: No input queue empty condition detected 1: Input queue empty condition detected
8	IQFIS	Input Queue Full Interrupt Status Bit 0: No input queue full condition detected 1: Input queue full condition detected
7 to 3	Reserved	When read, the value after reset is read. When writing, write the value after reset.
2	UIRP	User Input transfer Request Pending Bit 0: No user input transfer request pending 1: User input transfer request pending
1	IQH	Input Queue Halted Bit 0: Input queue not halted 1: Input queue halted
0	ITS	Input Transfer Status Bit 0: Disabled 1: Enabled

(1) FLXAnFRITS.IGIDX

Input queue Get InDeX Bit

These bits are only valid when bit FLXAnFRITS.IQH is 1

These bits represent the input pointer index the input queue handler will transfer next.

Valid values are 00_H to FLXAnFRITC.ITM.

The get index is incremented when the input data structure has been transferred from the local RAM and the related FLXAnFRDA.DA flag is cleared.

The index is set to 00_H when bit FLXAnFRITS.ITS changes from 0 to 1.

(2) FLXAnFRITS.IPIDX

Input queue Put InDeX Bit

These bits represent the index where the next input data structure pointer in the input pointer table should be stored.

Valid values are 00_H to FLXAnFRITC.ITM.

After reaching the maximum value the put index continues from 00_H.

The index is incremented when writing to bits FLXAnFRIQC.IMBNR[6:0].

The index is set to 00_H when bit FLXAnFRITS.ITS changes from 0 to 1.

(3) FLXAnFRITS.IQFP

Input Queue Full condition Pending Bit

This bit represents that the input queue is full.

There should be no further input transfer requests, by writing to bits FLXAnFRIQC.IMBNR[6:0], as long as this bit is 1.

[Clearing condition]

- This bit is cleared when there is one free entry in the input queue.

[Setting condition]

- This bit is set when all entries in the input queue are occupied.

(4) FLXAnFRITS.IQEIS

Input Queue Empty Interrupt Status Bit

Writing 0 has no effect on the bit value.

If enabled in bit FLXAnFRITC.IQEIE, the input queue empty interrupt is generated when this bit is 1.

[Clearing condition]

- This bit is cleared when writing a 1 to FLXAnFRITS.IQEIS.
- This bit is cleared when bit FLXAnFRITS.ITS changes from 0 to 1.

[Setting condition]

- This bit is set when all pending input transfers have been processed and consequently the input queue becomes empty.

(5) FLXAnFRITS.IQFIS

Input Queue Full Interrupt Status Bit

Writing 0 has no effect on the bit value.

If enabled in bit FLXAnFRITC.IQFIE the input queue full interrupt is generated when FLXAnFRITS.IQFIS is 1.

This flag is intended as interrupt status flag. It does not represent the current input queue status; for this status refer to bit FLXAnFRITS.IQFP.

[Clearing condition]

- This bit is cleared when writing a 1 to FLXAnFRITS.IQFIS.
- This bit is cleared when bit FLXAnFRITS.ITS changes from 0 to 1.

[Setting condition]

- This bit is set when all entries in the input queue are occupied.

(6) FLXAnFRITS.UIRP

User Input transfer Request Pending Bit

This bit represents that a user input transfer is still pending.

There should be no further write access to bits FLXAnFRUIR.UIDX[7:0] when this bit is 1.

[Clearing condition]

- This bit is cleared when the user input transfer request is processed by the input transfer handler.

[Setting condition]

- This bit is set when writing to bits FLXAnFRUIR.UIDX[7:0].

(7) FLXAnFRITS.IQH

Input Queue Halted Bit

This bit represents the status of the input queue.

There should be no further write access to bits FLXAnFRUIR.UIDX[7:0] when this bit is 1.

[Clearing condition]

- This bit is cleared when bit FLXAnFRITC.IQHR is set to 0.

[Setting condition]

- This bit is set immediately when bit FLXAnFRITC.IQHR is set to 1 and there is no ongoing input transfer.
- This bit is set only after an ongoing input transfer has been completed and bit FLXAnFRITC.IQHR is set to 1.

(8) FLXAnFRITS.ITS

Input Transfer Status Bit

This bit represents the status of the input queue handler.

While this bit is 1, there should be no read or write access to the address area <FLXn_base> + 0400_H to <FLXn_base> + $05FF_H$ and there should be no CLEAR_RAMS command applied to bits FLXAnFRSUCC1.CMD[3:0].

The input transfer queue indexes and related status flags are set to 0 when bit FLXAnFRITS.ITS changes from 0 to 1.

[Clearing condition]

- This bit is cleared immediately when bit FLXAnFRITC.ITE is set to 0 and there are no pending input transfers
- This bit is cleared after all pending requests have been processed and bit FLXAnFRITC.ITE is 0.

[Setting condition]

- This bit is set when bit FLXAnFRITC.ITE is set to 1.

18.2.13.2 FLXAnFROTS — FlexRay Output Transfer Status Register

Access: This register can be read/written in 8-, 16-, or 32-bit units.

Address: <FLXn_base> + 0824_H

Value after reset: $0000\ 0000_H$

Bit	31	30	29	28	27	26	25	24	23	22	21	20	19	18	17	16
	—	—	FFL[5:0]						—	—	—	FGIDX[4:0]				
Value after reset	0	0	0	0	0	0	0	0	0	0	0	0	0	0	0	0
R/W	R	R	R	R	R	R	R	R	R	R	R	R	R	R	R	R

Bit	15	14	13	12	11	10	9	8	7	6	5	4	3	2	1	0
	FWP	OWP	FDA	—	FWS	OWS	FIS	OTIS	—	—	—	—	—	UORP	—	OTS
Value after reset	0	0	0	0	0	0	0	0	0	0	0	0	0	0	0	0
R/W	R	R	R/W	R	R/W	R/W	R/W	R/W	R	R	R	R	R	R	R	R

Table 18.92 FLXAnFROTS Register Contents (1/2)

Bit Position	Bit Name	Function
31, 30	Reserved	When read, the value after reset is read. When writing, write the value after reset.
29 to 24	FFL[5:0]	FIFO Fill Level Bit Represent the number of unprocessed output FIFO structures
23 to 21	Reserved	When read, the value after reset is read. When writing, write the value after reset.
20 to 16	FGIDX[4:0]	FIFO Get InDeX Bit Represent the get index in the FIFO pointer table
15	FWP	FIFO transfer Warning condition Pending Bit 0: No FIFO transfer warning condition pending 1: FIFO transfer warning condition pending
14	OWP	Output transfer Warning condition Pending 0: No output transfer warning condition pending 1: Output transfer warning condition pending
13	FDA	FIFO Data Available Bit 0: No available FIFO structures 1: FIFO structures available at current FLXAnFROTS.FGIDX index
12	Reserved	When read, the value after reset is read. When writing, write the value after reset.
11	FWIS	FIFO transfer Warning Interrupt Status Bit 0: No FIFO transfer warning condition detected 1: FIFO transfer warning condition detected
10	OWIS	Output transfer Warning Interrupt Status Bit 0: No output transfer warning condition detected 1: Output transfer warning condition detected
9	FIS	FIFO transfer Interrupt Status Bit 0: No FIFO structure updated in local RAM 1: FIFO structure updated in local RAM
8	OTIS	Output transfer Interrupt Status Bit 0: No output structure updated in local RAM 1: Output structure updated in local RAM
7 to 3	Reserved	When read, the value after reset is read. When writing, write the value after reset.
2	UORP	User Output transfer Request Pending Bit 0: No user output transfer request pending 1: User output transfer request pending

Table 18.92 FLXAnFROTS Register Contents (2/2)

Bit Position	Bit Name	Function
1	Reserved	When read, the value after reset is read. When writing, write the value after reset.
0	OTS	Output Transfer Status Bit 0: Disabled 1: Enabled

(1) FLXAnFROTS.FFL

FIFO Fill Level Bit

These bits represent the number of available output FIFO structures in the local RAM.

Valid values are 00_H to FLXAnFROTC.FTM+1.

The value 00_H represents that the FIFO is empty.

The value FLXAnFROTC.FTM+1 represents that the FIFO is full and no further FIFO transfers will be done.

The FIFO fill level is incremented when a FIFO data structure has been transferred from the FlexRay internal FIFO into the local RAM.

The FIFO fill level is decremented when the user releases a FIFO data structure in the local RAM by writing 1 to bit FLXAnFROTS.FDA.

The FIFO fill level is set to 00_H when bit FLXAnFROTS.OTS changes from 0 to 1.

(2) FLXAnFROTS.FGIDX

FIFO Get InDeX Bit

These bits represent the index where the current output data structure pointer in the FIFO pointer table is available for reading.

Valid values are 00_H to FLXAnFROTC.FTM.

After reaching the maximum value the get index continues from 00_H.

The index is incremented when a FIFO data structure is released by writing 1 to bit FLXAnFROTS.FDA.

The index is set to 00_H when bit FLXAnFROTS.OTS changes from 0 to 1.

(3) FLXAnFROTS.FWP

FIFO transfer Warning condition Pending Bit

This bit represents the FIFO transfer warning condition.

[Clearing condition]

- This bit is cleared when there are free output data structures (FLXAnFROTS.FFL ≤ FLXAnFROTC.FTM).

This bit is cleared when bit FLXAnFROTS.OTS changes from 0 to 1.

[Setting condition]

- This bit is set when the output transfer handler detects a transfer condition for FIFO message buffers but there are no free output data structures (FLXAnFROTS.FFL = FLXAnFROTC.FTM+1).

(4) FLXAnFROTS.OWP

Output transfer Warning condition Pending Bit

This bit represents the output transfer warning condition.

[Clearing condition]

- This bit is cleared, when all output structure pointers that have a pending output handler transfer condition detected, are released (for dedicated transmit and receive message buffers or a user output transfer request).
- This bit is cleared when bit FLXAnFROTS.OTS changes from 0 to 1.

[Setting condition]

- This bit is set when the output transfer handler detects a transfer condition (for dedicated transmit and receive message buffers or a user output transfer request) but the related output structure pointer was not yet released by the application (data available flag is still set to 1).
- This bit is set when the output transfer handler detects a transfer condition for dedicated transmit and receive message buffers but there is a pending input transfer for the same message buffer (data available flag is set to 1 due to the input transfer request).

(5) FLXAnFROTS.FDA

FIFO Data Available Bit

Writing 0 has no effect on the bit value.

When this bit is 1, the next valid output data structure is available.

The related data structure pointer is in the FIFO pointer table at FLXAnFROTS.FGIDX.

Writing 1 to FLXAnFROTS.FDA

- increments FLXAnFROTS.FGIDX[4:0] and
- decrements the FIFO fill level (FLXAnFROTS.FFL)

If there are still unprocessed data structures FLXAnFROTS.FDA remains 1.

[Clearing condition]

- This bit is cleared when writing 1 to FLXAnFROTS.FDA and the FIFO fill level becomes 00_H.
- This bit is cleared when bit FLXAnFROTS.OTS changes from 0 to 1.

[Setting condition]

- This bit is set when there is at least one FIFO data structure available in the local RAM.

(6) FLXAnFROTS.FWIS

FIFO transfer Warning Interrupt Status Bit

Writing 0 has no effect on the bit value.

If enabled in bit FLXAnFROTC.FWIE, the FIFO transfer warning interrupt is generated when this bit is 1.

[Clearing condition]

- This bit is cleared when writing a 1 to FLXAnFROTS.FWIS.
- This bit is cleared when bit FLXAnFROTS.OTS changes from 0 to 1.

[Setting condition]

- This bit is set when the output transfer handler detects a transfer condition for FIFO message buffers but there are no free output data structures (FLXAnFROTS.FFL = FLXAnFROTC.FTM+1).

(7) FLXAnFROTS.OWIS

Output transfer Warning Interrupt Status Bit

Writing 0 has no effect on the bit value.

If enabled in bit FLXAnFROTC.OWIE, the FIFO transfer warning interrupt is generated when this bit is 1.

[Clearing condition]

- This bit is cleared when writing a 1 to this bit.
- This bit is cleared when bit FLXAnFROTS.OTS changes from 0 to 1.

[Setting condition]

- This bit is set when the output transfer handler detects a transfer condition (for dedicated transmit and receive message buffers or a user output transfer request) but the related output structure pointer was not yet released by the application (data available flag is still set to 1).
- This bit is set when the output transfer handler detects a transfer condition for dedicated transmit and receive message buffers but there is a pending input transfer for the same message buffer (data available flag is set to 1 due to the input transfer request).

(8) FLXAnFROTS.FIS

FIFO transfer Interrupt Status Bit

Writing 0 has no effect on the bit value.

If enabled in bit FLXAnFROTC.FIE, the FIFO transfer interrupt is generated when this bit is 1.

[Clearing condition]

- This bit is cleared when writing a 1 to this bit.
- This bit is cleared when bit FLXAnFROTS.OTS changes from 0 to 1.

[Setting condition]

- This bit is set when a FIFO data structure is updated by the transfer handler or bits FLXAnFROTS.FFL[5:0] changes from 00_H to 01_H.

(9) FLXAnFROTS.OTIS

Output transfer Interrupt Status Bit

Writing 0 has no effect on the bit value.

If enabled in bit FLXAnFROTC.OIE, the output transfer interrupt is generated when this bit is 1.

[Clearing condition]

- This bit is cleared when writing a 1 to bit FLXAnFROTS.OTIS.
- This bit is cleared when bit FLXAnFROTS.OTS changes from 0 to 1.

[Setting condition]

- This bit is set when an output data structure is updated by the transfer handler (from a dedicated transmit or receive message buffer or by a user output transfer request).

(10) FLXAnFROTS.UORP

User Output transfer Request Pending Bit

This bit represents that a user output transfer is still pending.

There should be no further write access to bits FLXAnFRUOR.UMBNR[6:0] when this bit is 1.

[Clearing condition]

- This bit is cleared when the user output transfer request is processed by the output transfer handler.
- This bit is cleared when the bit FLXAnFROTS.OTS changes from 0 to 1.

[Setting condition]

- This bit is set when writing to bit FLXAnFRUOR.UMBNR.

(11) FLXAnFROTS.OTS

Output Transfer Status Bit

This bit represents the status of the output transfer handler.

While this bit is 1, there should be no read or write access to the address area <FLXn_base> + 0600_H to <FLXn_base> + $07FF_H$ and there should be no CLEAR_RAMS command applied to bits FLXAnFRSUCC1.CMD[3:0].

While this bit is 1, the user should not change the E-Ray message RAM configuration by writing to the FLXAnFRMRC register.

The output hander transfer indexes and related status flags are set to 0 when this bit changes from 0 to 1.

[Clearing condition]

- This bit is cleared immediately when bit FLXAnFROTC.OTE is set to 0 and there are no ongoing output transfers.
- This bit is cleared after an ongoing transfer has been completed and bit FLXAnFROTC.OTE is 0.

[Setting condition]

- This bit is set when bit FLXAnFROTC.OTE is set to 1.

18.2.13.3 FLXAnFRAES — FlexRay Access Error Status Register

Access: This register can be read/written in 8-, 16-, or 32-bit units.

Address: <FLXn_base> + 0828_H

Value after reset: $0000\ 0000_H$

Bit	31	30	29	28	27	26	25	24	23	22	21	20	19	18	17	16
	—	—	—	—	—	—	—	—	—	—	—	—	—	—	—	—
Value after reset	0	0	0	0	0	0	0	0	0	0	0	0	0	0	0	0
R/W	R	R	R	R	R	R	R	R	R	R	R	R	R	R	R	R

Bit	15	14	13	12	11	10	9	8	7	6	5	4	3	2	1	0
	—	—	—	—	MAE	FAE	OAE	IAE	EIDX[7:0]							
Value after reset	0	0	0	0	0	0	0	0	0	0	0	0	0	0	0	0
R/W	R	R	R	R	R/W	R/W	R/W	R/W	R	R	R	R	R	R	R	R

Table 18.93 FLXAnFRAES Register Contents

Bit Position	Bit Name	Function
31 to 12	Reserved	When read, the value after reset is read. When writing, write the value after reset.
11	MAE	Multiple Access Errors Bit 0: No multiple access errors occurred 1: Multiple access errors occurred
10	FAE	FIFO transfer Access Error Bit 0: No access error occurred during FIFO transfer 1: Access error occurred during FIFO transfer
9	OAE	Output transfer Access Error Bit 0: No access error occurred during output transfer 1: Access error occurred during output transfer
8	IAE	Input transfer Access Error Bit 0: No access error occurred during input transfer 1: Access error occurred during input transfer
7 to 0	EIDX[7:0]	Error InDeX Bit Data structure pointer index number

(1) FLXAnFRAES.MAE

Multiple Access Errors Bit

Writing 0 has no effect on the bit value.

This bit represents that there were multiple access errors during a data transfer.

[Clearing condition]

- This bit is cleared when writing a 1 to FLXAnFRAES.MAE.

[Setting condition]

- This bit is set when one of the bits FLXAnFRAES.FAE, FLXAnFRAES.OAE and FLXAnFRAES.IAE is set and one of the conditions below is met:
  - an access to an protected address occurred during a FIFO data transfer or
  - an access to an protected address occurred during an output data transfer or
  - an access to an protected address occurred during an input data transfer

(2) FLXAnFRAES.FAE

FIFO transfer Access Error Bit

Writing 0 has no effect on the bit value.

This bit represent that there was an access error during a FIFO data transfer.

[Clearing condition]

- This bit is cleared when writing a 1 to FLXAnFRAES.FAE.

[Setting condition]

- This bit is set when a local RAM access error was detected during a FIFO transfer and bits FLXAnFRAES.OAE, FLXAnFRAES.IAE and FLXAnFRAES.MAE are 0.

(3) FLXAnFRAES.OAE

Output transfer Access Error Bit

Writing 0 has no effect on the bit value.

This bit represent that there was an access error during a output data transfer.

[Clearing condition]

- This bit is cleared when writing a 1 to FLXAnFRAES.OAE.

[Setting condition]

- This bit is set when a local RAM access error was detected during an output transfer and bits FLXAnFRAES.FAE, FLXAnFRAES.IAE and FLXAnFRAES.MAE are 0.

(4) FLXAnFRAES.IAE

Input transfer Access Error Bit

Writing 0 has no effect on the bit value.

This bit represent that there was an access error during an input data transfer.

[Clearing condition]

- This bit is cleared when writing a 1 to FLXAnFRAES.IAE.

[Setting condition]

- This bit is set when a local RAM access error was detected during an output transfer and bits FLXAnFRAES.OAE, FLXAnFRAES.FAE and FLXAnFRAES.MAE are 0.

(5) FLXAnFRAES.EIDX

Error InDeX Bit

This value is only valid when one of the bits FLXAnFRAES.FAE, FLXAnFRAES.OAE and FLXAnFRAES.IAE is 1.

When bit FLXAnFRAES.FAE is 1, FLXAnFRAES.EIDX holds the used FIFO put index when the access error has occurred.

When bit FLXAnFRAES.OAE is 1, FLXAnFRAES.EIDX holds the input pointer table get index used when an access error occurred during an input transfer or when the user request an input transfer.

When bit FLXAnFRAES.IAE is 1, FLXAnFRAES.EIDX holds the used input pointer table get index when the access error has occurred.

These bits are updated when one of the bits FLXAnFRAES.FAE, FLXAnFRAES.OAE and FLXAnFRAES.IAE is changing from 0 to 1.

18.2.13.4 FLXAnFRAEA — FlexRay Access Error Address Register

Access: This register can only be read in 8-, 16-, or 32-bit units.

Address: <FLXn_base> + $082C_H$

Value after reset: $0000\ 0000_H$

Bit	31	30	29	28	27	26	25	24	23	22	21	20	19	18	17	16
	AEA[31:16]															
Value after reset	0	0	0	0	0	0	0	0	0	0	0	0	0	0	0	0
R/W	R	R	R	R	R	R	R	R	R	R	R	R	R	R	R	R

Bit	15	14	13	12	11	10	9	8	7	6	5	4	3	2	1	0
	AEA[15:0]															
Value after reset	0	0	0	0	0	0	0	0	0	0	0	0	0	0	0	0
R/W	R	R	R	R	R	R	R	R	R	R	R	R	R	R	R	R

Table 18.94 FLXAnFRAEA Register Contents

Bit Position	Bit Name	Function
31 to 0	AEA[31:0]	Access Error Address Bit Address in the local RAM when an access error has occurred

(1) FLXAnFRAEA.AEA

Access Error Address Bit

This value is only valid when one of the bits FLXAnFRAES.FAE, FLXAnFRAES.OAE and FLXAnFRAES.IAE is 1.

These bits represent the address of the access error indicated in the FLXAnFRAES register.

These bits are updated when one of the bits FLXAnFRAES.FAE, FLXAnFRAES.OAE and FLXAnFRAES.IAE is changing from 0 to 1.

18.2.13.5 FLXAnFRDAm — FlexRay message Data Available Register m (m = 0 to 3)

Access: This register can be read/written in 8-, 16-, or 32-bit units.

Address: <FLXn_base> + 0830_H to <FLXn_base> + $083C_H$ (<FLXn_base> + 0830_H + m*4)

Value after reset: $0000\ 0000_H$

Bit	31	30	29	28	27	26	25	24	23	22	21	20	19	18	17	16
	DAp[31:16]															
Value after reset	0	0	0	0	0	0	0	0	0	0	0	0	0	0	0	0
R/W	R/W	R/W	R/W	R/W	R/W	R/W	R/W	R/W	R/W	R/W	R/W	R/W	R/W	R/W	R/W	R/W

Bit	15	14	13	12	11	10	9	8	7	6	5	4	3	2	1	0
	DAp[15:0]															
Value after reset	0	0	0	0	0	0	0	0	0	0	0	0	0	0	0	0
R/W	R/W	R/W	R/W	R/W	R/W	R/W	R/W	R/W	R/W	R/W	R/W	R/W	R/W	R/W	R/W	R/W

Table 18.95 FLXAnFRDAm Register Contents

Bit Position	Bit Name	Function
31 to 0	DAp[31:0]	Data Available Bit p 0: No data available for destination 1: Data available for destination

(1) FLXAnFRDAm.DAp (p = m*32 to ((m + 1)*32) – 1)

Data Available Bit p

The user should not write a 1 to bits that are 0.

To maintain the status of input transfers, the user should not clear bits related to input transfers.

This register is used for input and output transfers.

Each flag corresponds to a FlexRay message buffer.

[Clearing condition]

- Input transfer:
  This bit is cleared when the input data structure has been transferred from the local RAM. The data structure and the data structure pointer can be changed when the related flag is 0.
- Output transfer:
  This bit is cleared when writing a 1 to it.

[Setting condition]

- Input transfer:
  This bit is set when the corresponding message buffer number has been written to bits FLXAnFRIQC.IMBNR[6:0].
  As long as this bit is 1, the input data structure and the data structure pointer corresponding to this input transfer request should not be changed.
- Output transfer:
  This bit is set when the output data structure corresponding to this message buffer has been updated.

As long as this bit is 1, the data structure is stable; no further update of the data structure will be done by the output handler. While this bit is 1, the application is allowed to change the output data structure pointer in the output pointer table for this message buffer number.

18.3 Functional Description

This chapter describes the FlexRay implementation together with the related FlexRay protocol features. More information about the FlexRay protocol itself can be found in the FlexRay protocol specification.

18.3.1 FlexRay Module Operation Control

18.3.1.1 FlexRay Module Enable

After a reset or after the FlexRay module has been disabled (following **Section 18.3.1.2, FlexRay Module Disable**) the FlexRay module is in the reset state (bit FLXAnFROS.OS is 0) and the clocks of the FlexRay core module are disabled.

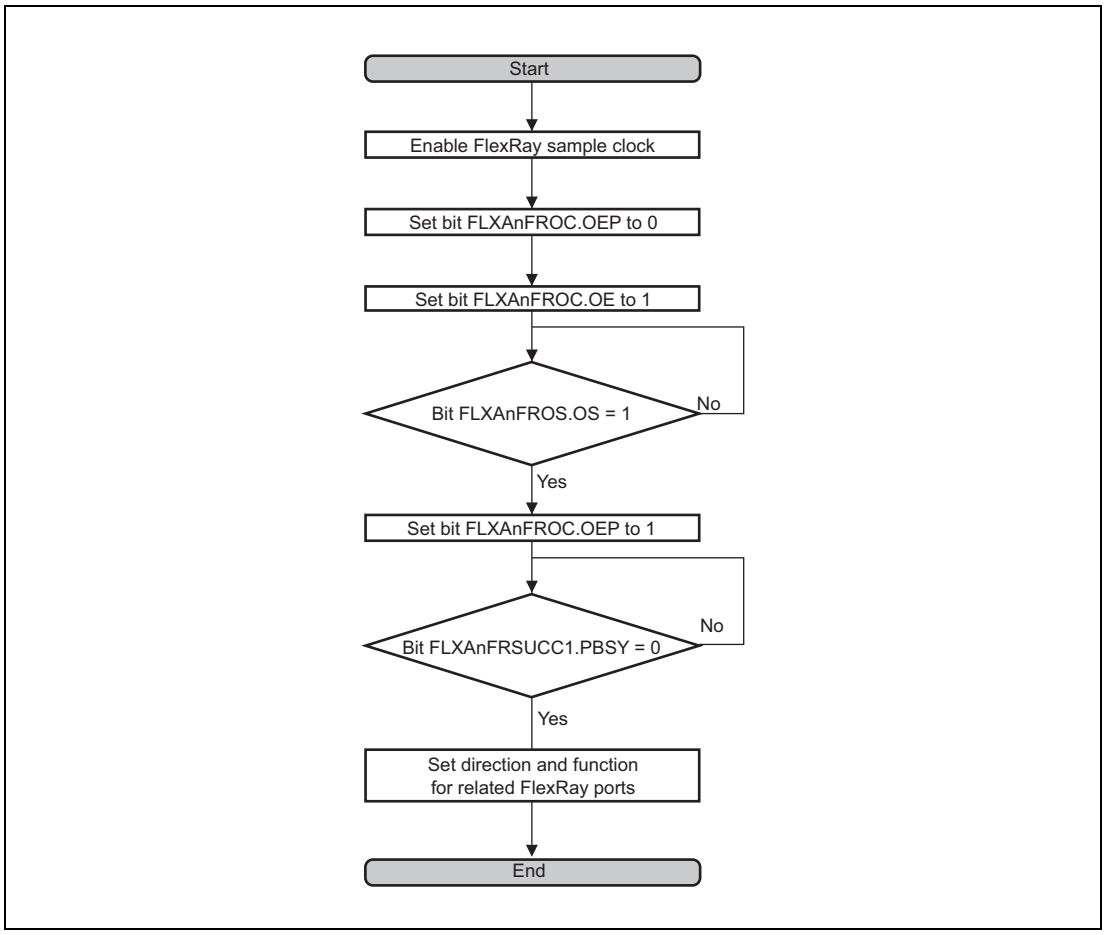

Figure 18.3 FlexRay Enable Processing Flow

18.3.1.2 FlexRay Module Disable

The FlexRay module can be disabled at any time. However, it is recommended to disable the FlexRay module using bit FLXAnFROC.OE only when the FlexRay module is in HALT, CONFIG or DEFAULT_CONFIG state. Resetting the FlexRay module in any other state will terminate any ongoing FlexRay communication.

If the data transfer function is used, it is also required to disable this function before disabling the FlexRay module (see **Section 18.3.16.1, Input Data Transfer (1), Activation and deactivation** for suspending input transfer function and **Section 18.3.16.2, Output Data Transfer (1), Activation and deactivation** for suspending output transfer).

The following flow should be executed to disable the FlexRay module.

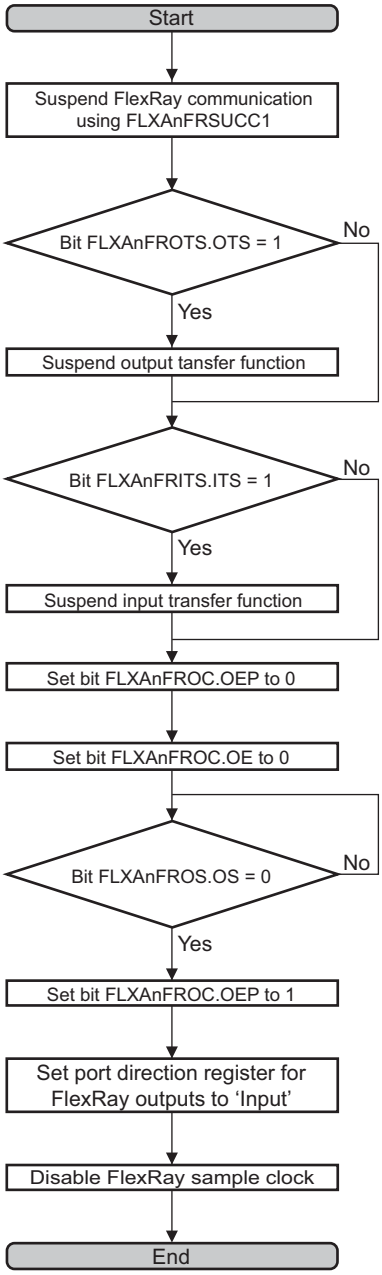

Figure 18.4 FlexRay Disable Processing Flow

18.3.2 Communication Cycle

Communication on FlexRay networks is based on frames and symbols. The wakeup symbol (WUS) and the collision avoidance symbol (CAS) are transmitted outside the communication cycle to setup the time schedule. Frames and media access test symbols (MTS) are transmitted inside the communication cycle.

A FlexRay communication cycle consists of the following elements:

- Static Segment
- Dynamic Segment (optional)
- Symbol Window (optional)
- Network Idle Time (NIT)

Static segment, dynamic segment, and symbol window form the Network Communication Time (NCT). For each communication channel the slot counter starts at 1 and counts up until the end of the dynamic segment is reached. Both channels share the same arbitration grid which means that they use the same synchronized macrotick.

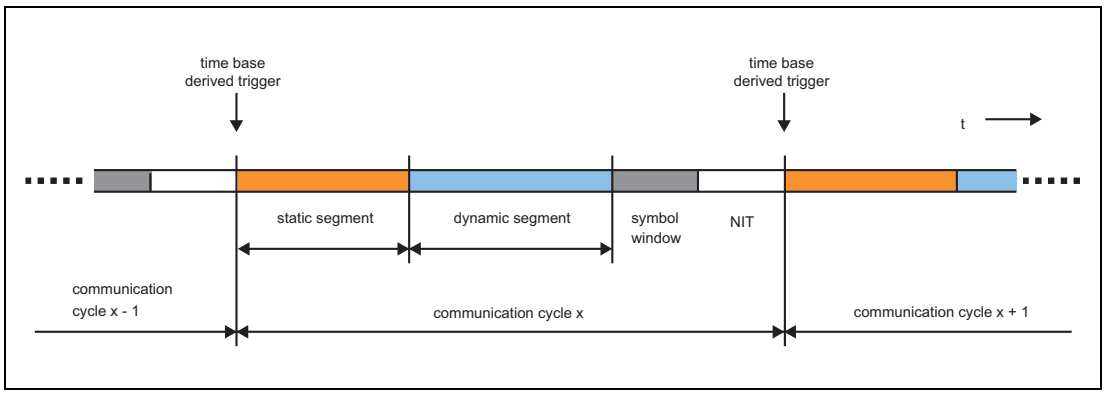

Figure 18.5 Structure of Communication Cycle

18.3.2.1 Static Segment

The Static Segment is characterized by the following features:

- Time slots of fixed length (optionally protected by bus guardian)
- Start of frame transmission at action point of the respective static slot
- Payload length same for all frames on both channels

Parameters:

Number of Static Slots (FRGTUC7.NSS[9:0])

Static Slot Length (FRGTUC7.SSL[9:0])

Payload Length Static (FRMHDC.SFDL[6:0])

Action Point Offset (FRGTUC9.APO[5:0])

18.3.2.2 Dynamic Segment

The Dynamic Segment is characterized by the following features:

- All controllers have bus access (no bus guardian protection possible)
- Variable payload length and duration of slots, different for both channels
- Start of transmission at minislot action point

Parameters:

Number of Minislots (FRGTUC8.NMS[12:0])

Minislot Length (FRGTUC8.MSL[5:0])

Minislot Action Point Offset (FRGTUC9.MAPO[4:0])

Start of Latest Transmit (last minislot) (FRMHDC.SLT[12:0])

18.3.2.3 Symbol Window

During the symbol window only one media access test symbol (MTS) may be transmitted per channel. MTS symbols are send in NORMAL_ACTIVE state to test the bus guardian.

The symbol window is characterized by the following features:

- Send single symbol
- Transmission of the MTS symbol starts at the symbol windows action point

Parameters:

Symbol Window Action Point Offset (FRGTUC9.APO[4:0]) (same as for static slots)

Network Idle Time Start (FRGTUC4.NIT[13:0])

18.3.2.4 Network Idle Time (NIT)

During network idle time the CC has to perform the following tasks:

- Calculate clock correction terms (offset and rate)
- Distribute offset correction over multiple macroticks after offset correction start
- Perform cluster cycle related tasks

Parameters:

Network idle time start bit (FLXAnFRGTUC4.NIT[13:0])

Offset correction start bit (FLXAnFRGTUC4.OCS[13:0])

18.3.2.5 Configuration of NIT Start and Offset Correction Start

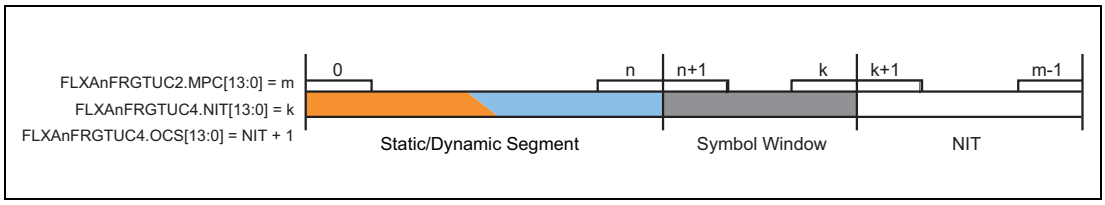

Figure 18.6 Configuration of NIT Start and Offset Correction Start

The number of macroticks per cycle gMacroPerCycle is assumed to be m. It is configured by programming FFGTUC2.MPC[13:0] = m.

The static / dynamic segment starts with macrotick 0 and ends with macrotick n:

n = static segment length + dynamic segment offset + dynamic segment length – 1MT

= gNumberOfStaticSlots × gdStaticSlot + dynamic segment offset + gNumberOfMinislots × gdMinislot – 1 MT

The static segment length is configured by FLXAnFRGTUC7.SSL[9:0] and FLXAnFRGTUC7.NSS[9:0].

The dynamic segment length is configured by FLXAnFRGTUC8.MSL[5:0] and FLXAnFRGTUC8.NMS[12:0].

The dynamic segment offset is:

If gdActionPointOffset <= gdMinislotActionPointOffset:

dynamic segment offset = 0 MT

Else if gdActionPointOffset > gdMinislotActionPointOffset:

dynamic segment offset = gdActionPointOffset -gdMinislotActionPointOffset

The NIT starts with macrotick k+1 and ends with the last macrotick of cycle m-1. It has to be configured by setting FLXAnFRGTUC4.NIT[13:0] = k.

For the FlexRay module the offset correction start is required to be FLXAnFRGTUC4.OCS[13:0] ≥ FLXAnFRGTUC4.NIT[13:0] + 1 = k + 1.

The length of symbol window results from the number of macroticks between the end of the static / dynamic segment and the beginning of the NIT. It can be calculated by the number of macroticks (k – n).

18.3.3 Communication Modes

The FlexRay Protocol Specification defines the Time-Triggered Distributed (TT-D) mode.

18.3.3.1 Time-triggered Distributed (TT-D)

In TT-D mode the following configurations are possible:

- Pure static: Minimum 2 static slots + symbol window (optional)
- Mixed static/dynamic: Minimum 2 static slots + dynamic segment + symbol window (optional)

A minimum of two coldstart nodes needs to be configured for distributed time-triggered operation. Two fault-free coldstart nodes are necessary for the cluster startup. Each startup frame must be a sync frame, therefore all coldstart nodes are sync nodes.

18.3.4 Clock Synchronization

In TT-D mode a distributed clock synchronization is used. Each node individually synchronizes itself to the cluster by observing the timing of received sync frames from other nodes.

18.3.4.1 Global Time

Activities in a FlexRay node, individual nodes independently operate. Operations including communication, are based on the concept of a global time. It is the clock synchronization mechanism that differentiates the FlexRay cluster from other node collections with independent clock mechanisms. The global time is a vector of two values; the cycle (cycle counter) and the cycle time (macrotick counter).

Cluster specific:

- Macrotick (MT) = basic unit of time measurement in a FlexRay network, a macrotick consists of an integer number of microticks (µT)
- Cycle length = duration of a communication cycle in units of macroticks (M.)

18.3.4.2 Local Time

Internally, nodes time their behavior with microtick resolution. Microticks are time units derived from the oscillator clock tick of the specific node. Therefore microticks are controller-specific units. They may have different duration in different controllers. The precision of a node's local time difference measurements is a microtick (µT).

Node specific:

- Oscillator clock → prescaler → microtick (µT)
- µT = basic unit of time measurement in a CC, clock correction is done in units of → Ts
- Cycle counter + macrotick counter = nodes local view of the global time

18.3.4.3 Synchronization Process

Clock synchronization is performed by means of sync frames. Only preconfigured nodes (sync nodes) are allowed to send sync frames. In a two-channel cluster a sync node has to send its sync frame on both channels.

For synchronization in FlexRay the following constraints have to be considered:

- Max. one sync frame per node in one communication cycle
- Max. 15 sync frames per cluster in one communication cycle
- Every node has to use a preconfigured number of sync frames (FLXAnFRGTUC2.SNM[3:0]) for clock synchronization
- Minimum of two sync nodes required for clock synchronization and startup

For clock synchronization the time difference between expected and observed arrival time of sync frames received during the static segment is measured. In a two channel cluster the sync node has to be configured to send sync frames on both channels. The calculation of correction terms is done during NIT (offset: every cycle, rate: every odd cycle) by using an FTM algorithm. For details see FlexRay protocol specification v2.1, chapter 8.

(1) Offset (phase) Correction

- Only deviation values measured and stored in the current cycle used
- For a two channel node the smaller value will be taken
- Calculation during NIT of every communication cycle
- Offset correction value calculated in even cycles used for error checking only
- Checked against limit values
- Correction value is a signed integer number of µTs
- Correction done in odd numbered cycles, distributed over the macroticks beginning at offset correction start up to cycle end (end of NIT) to shift nodes next start of cycle (MTs lengthened / shortened)

(2) Rate (frequency) Correction

- Pairs of deviation values measured and stored in even / odd cycle pair used
- For a two channel node the average of the differences from the two channels is used
- Calculated during NIT of odd numbered cycles
- Cluster drift damping is performed using global damping value
- Checked against limit values
- Correction value is a signed integer number of µTs
- Distributed over macroticks comprising the next even / odd cycle pair (MTs lengthened / shortened)

(3) Sync Frame Transmission

Sync frame transmission is only possible from buffer 0 and 1. Message buffer 1 may be used for sync frame transmission in case that sync frames should have different payloads on the two channels. In this case bit FLXAnFRMRC.SPLM has to be programmed to 1.

Message buffers used for sync frame transmission have to be configured with the key slot ID and can be (re)configured in DEFAULT_CONFIG or CONFIG state only. For nodes transmitting sync frames, bit FLXAnFRSUCC1.TXSY must be set to 1.

(4) External Clock Synchronization

During normal operation, independent clusters can drift significantly. If synchronous operation across independent clusters is desired, external synchronization is necessary; even though the nodes within each cluster are synchronized. This can be accomplished with synchronous application of host-deduced rate and offset correction terms to the clusters.

- External offset / rate correction value is a signed integer
- External offset / rate correction value is added to calculated offset / rate correction value
- Aggregated offset / rate correction term (external + internal) is not checked against configured limits

18.3.5 Error Handling

The implemented error handling concept is intended to ensure that, in case of a lower layer protocol error in one single node, communication between non-affected nodes can be maintained. In some cases, higher layer program activity is required for the CC to resume normal operation. A change of the error handling state will set FLXAnFREIR.PEMC to 1 and may trigger an interrupt to the Host if enabled. The actual error mode is signaled by FLXAnFRCCEV.ERRM[1:0].

Table 18.96 Error Modes of the POC (Degradation Model)

Error Mode	Activity
ACTIVE	Full operation, State: NORMAL_ACTIVE The CC is fully synchronized and supports the cluster wide clock synchronization. The host is informed of any error condition(s) or status change by interrupt (if enabled) or by reading the error and status interrupt flags from registers FLXAnFREIR and FLXAnFRSIR.
PASSIVE	Reduced operation, State: NORMAL_PASSIVE, CC self rescue allowed The CC stops transmitting frames and symbols, but received frames are still processed. Clock synchronization mechanisms are continued based on received frames. No active contribution to the cluster wide clock synchronization. The host is informed of any error condition(s) or status change by interrupt (if enabled) or by reading the error and status interrupt flags from registers FLXAnFREIR and FLXAnFRSIR.
COMM_HALT	Operation halted, State: HALT, CC self rescue not allowed The CC stops frame and symbol processing, clock synchronization processing, and the macrotick generation. The host has still access to error and status information by reading the error and status interrupt flags from registers FLXAnFREIR and FLXAnFRSIR. The bus drivers are disabled.

18.3.5.1 Clock Correction Failed Counter

When the Clock Correction Failed Counter reaches the “maximum without clock correction passive” limit defined by FLXAnFRSUCC3.WCP[3:0], the POC transits from NORMAL_ACTIVE to NORMAL_PASSIVE state. When it reaches the “maximum without clock correction fatal” limit defined by FLXAnFRSUCC3.WCF[3:0], it transits from NORMAL_ACTIVE or NORMAL_PASSIVE to HALT state.

The Clock Correction Failed Counter (FLXAnFRCCEV.CCFC[3:0]) allows the Host to monitor the duration of the inability of a node to compute clock correction terms after the CC passed protocol startup phase. It will be incremented by one at the end of any odd communication cycle during which either the missing offset correction FLXAnFRSFS.MOCS or the missing rate correction FLXAnFRSFS.MRCS flag is set to 1.

The Clock Correction Failed Counter is reset to zero at the end of an odd communication cycle if neither the missing offset correction FLXAnFRSFS.MOCS nor the missing rate correction FLXAnFRSFS.MRCS flag is set to 1.

The Clock Correction Failed Counter stops incrementing when the “maximum without clock correction fatal” value FLXAnFRSUCC3.WCF is reached (i.e. incrementing the counter at its maximum value will not cause it to wrap around back to zero). The Clock Correction Failed Counter is initialized to zero when the CC enters READY state or when NORMAL_ACTIVE state is entered.

CAUTION

The transition to HALT state is prevented if the FLXAnFRSUCC1.HCSE bit is not set to 1.

18.3.5.2 Passive to Active Counter

The passive to active counter controls the transition of the POC from NORMAL_PASSIVE to NORMAL_ACTIVE state. FLXAnFRSUCC1.PTA[4:0] defines the number of consecutive valid even/odd cycle pairs that must have valid clock correction terms before the CC is allowed to transit from NORMAL_PASSIVE to NORMAL_ACTIVE state. If FLXAnFRSUCC1.PTA[4:0] is set to 0 the CC is not allowed to transit from NORMAL_PASSIVE to NORMAL_ACTIVE state.

18.3.5.3 HALT Command

In case the Host wants to stop FlexRay communication of the local node it can bring the CC into HALT state by asserting the HALT command. This can be done by writing 0110 to bits FLXAnFRSUCC1.CMD[3:0]. In order to shut down communication on an entire FlexRay network, a higher layer protocol is required to assure that all nodes apply the HALT command at the same time.

The POC state from which the transition to HALT state took place can be read from flags FLXAnFRCCSV.PSL[5:0].

When called in NORMAL_ACTIVE or NORMAL_PASSIVE state the POC transits to HALT state at the end of the current cycle. When called in any other state, bits FLXAnFRSUCC1.CMD[3:0] will be reset to “0000” = command_not_accepted and bit FLXAnFREIR.CNA is set to 1. If enabled an interrupt to the Host is generated.

18.3.5.4 FREEZE Command

In case the Host detects a severe error condition it can bring the CC into HALT state by asserting the FREEZE command. This can be done by writing 0111 to bits FLXAnFRSUCC1.CMD[3:0]. The FREEZE command triggers the entry of the HALT state immediately regardless of the actual POC state.

The POC state from which the transition to HALT state took place can be read from flags FLXAnFRCCSV.PSL[5:0].

CAUTION

When transfer is stopped by a FREEZE or READY command and then restarted as a leading ColdStart node, the startup frame may not be transmitted in cycle 0. This depends on the internal state of the FlexRay module. Such cases arise when the startup frame is set in a slot 1 to slot 7. This does not occur in a ColdStart after a hardware reset. Even if the above situation arises, the ColdStart will succeed on the second trial. Repetition prolongs the overall ColdStart process, but the ColdStart will not be obstructed by the earlier situation. To avoid this effect, allocate startup and sync frames to static slot 8 or a slot with a higher number.

18.3.6 Communication Controller States

18.3.6.1 Communication Controller State Diagram

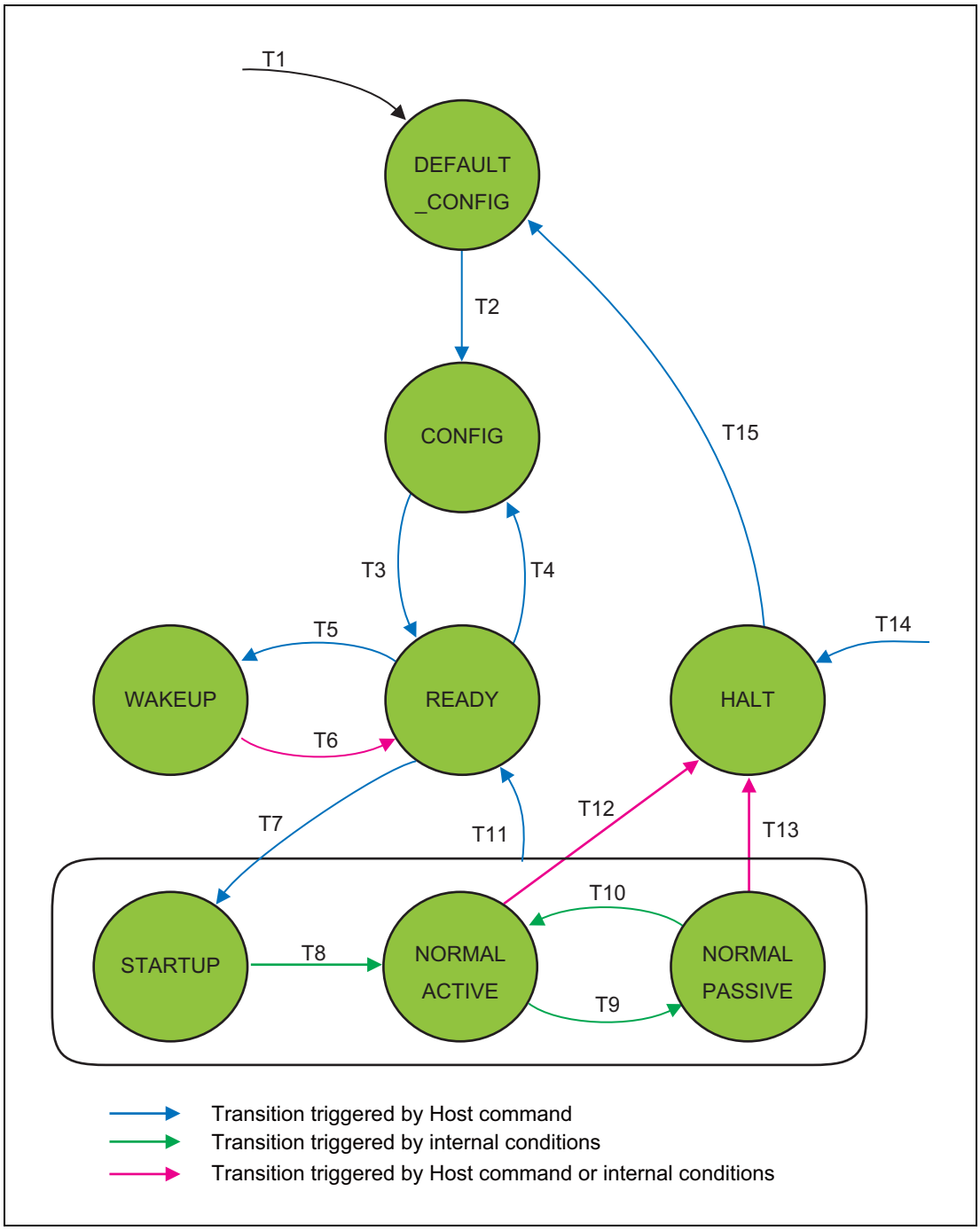

Figure 18.7 Overall State Diagram of FlexRay Communication Controller

State transitions are controlled by reset, rxda_extfxr, rxdb_extfxr, by the POC state machine, and by the CHI Command Vector FLXAnFRSUCC1.CMD[3:0].

The CC transits from all states to HALT state after application of the FREEZE command (FLXAnFRSUCC1.CMD[3:0] = “0111”).

Table 18.97 State Transitions of FlexRay Overall State Machine

T#	Condition	From	To
1	Reset	All States	DEFAULT_CONFIG
2	Command CONFIG: FLXAnFRSUCC1.CMD[3:0] = “0001”	DEFAULT_CONFIG	CONFIG
3	Unlock sequence followed by command READY: FLXAnFRSUCC1.CMD[3:0] = “0010”	CONFIG	READY
4	Command CONFIG: FLXAnFRSUCC1.CMD[3:0] = “0001”	READY	CONFIG
5	Command WAKEUP: FLXAnFRSUCC1.CMD[3:0] = “0011”	READY	WAKEUP
6	Complete transmission of wakeup pattern, received WUP or received frame header, wakeup collision or command READY: FLXAnFRSUCC1.CMD[3:0] = “0010”	WAKEUP	READY
7	Command RUN: FLXAnFRSUCC1.CMD[3:0] = “0100”	READY	STARTUP
8	Successful STARTUP	STARTUP	NORMAL_ACTIVE
9	Clock Correction Failed counter reached Maximum Without Clock Correction Passive limit configured by FLXAnFRSUCC3.WCP[3:0]	NORMAL_ACTIVE	NORMAL_PASSIVE
10	Number of valid correction terms reached the Passive to Active limit configured by FLXAnFRSUCC1.PTA[4:0]	NORMAL_PASSIVE	NORMAL_ACTIVE
11	Command READY: FLXAnFRSUCC1.CMD[3:0] = “0010”	STARTUP, NORMAL_ACTIVE, NORMAL_PASSIVE	READY
12	Clock Correction Failed counter reached Maximum Without Clock Correction Fatal limit configured by FLXAnFRSUCC3.WCF[3:0] when bit FLXAnFRSUCC1.HCSE set to 1 or command HALT, FLXAnFRSUCC1.CMD[3:0] = “0110”	NORMAL_ACTIVE	HALT
13	Clock Correction Failed counter reached Maximum Without Clock Correction Fatal limit configured by FLXAnFRSUCC3.WCF[3:0] when bit FLXAnFRSUCC1.HCSE set to 1, or command HALT: FLXAnFRSUCC1.CMD[3:0] = “0110”	NORMAL_PASSIVE	HALT
14	Command FREEZE: FLXAnFRSUCC1.CMD[3:0] = “0111”	All States	HALT
15	Command CONFIG: FLXAnFRSUCC1.CMD[3:0] = “0001”	HALT	DEFAULT_CONFIG

18.3.6.2 DEFAULT_CONFIG State

In DEFAULT_CONFIG state, the CC is stopped. All configuration registers are accessible and the pins to the physical layer are in their inactive state.

The CC enters this state

- When the reset is applied (HW reset or SW reset)
- When exiting from HALT state

To leave DEFAULT_CONFIG state, the Host has to write 0001 to bits FLXAnFRSUCC1.CMD[3:0]. The CC then transits to CONFIG state.

18.3.6.3 CONFIG State

In CONFIG state, the CC is stopped. All configuration registers are accessible and the pins to the physical layer are in their inactive state. This state is used to initialize the CC configuration.

The CC enters this state

- When exiting from DEFAULT_CONFIG state
- When exiting from READY state

When the state has been entered via HALT and DEFAULT_CONFIG state, the Host can analyse status information and configuration. Before leaving CONFIG state, the Host has to assure that the configuration is fault-free.

To leave CONFIG state, the Host has to perform the unlock sequence as described is **Section 18.2.3.1, FLXAnFRLCK — FlexRay Lock Register**. Directly after unlocking the CONFIG state the Host has to write bits FLXAnFRSUCC1.CMD[3:0] to enter the next state.

CAUTION

Status bits FLXAnFRMHDS[14:0], registers FLXAnFRTXRQ1 to FLXAnFRTXRQ4, and status data stored in the Message RAM are not affected by the transition of the POC from CONFIG to READY state.

When the CC is in CONFIG state it is also possible to bring the CC into a power saving mode by halting the module clocks (bus clock and sample clock). To do this the Host has to assure that all Message RAM transfers have finished before turning off the clocks.

18.3.6.4 READY State

After unlocking CONFIG state and writing 0010_B to FLXAnFRSUCC1.CMD[3:0], the CC enters READY state. From this state the CC can transit to WAKEUP state and perform a cluster wakeup or to STARTUP state to perform a coldstart or to integrate into a running cluster.

The CC enters this state

- When exiting from CONFIG, WAKEUP, STARTUP, NORMAL_ACTIVE, or NORMAL_PASSIVE state by writing 0010_B to FLXAnFRSUCC1.CMD[3:0] (READY command).

The CC exits from this state

- To CONFIG state by writing 0001_B to FLXAnFRSUCC1.CMD[3:0] (CONFIG command)
- To WAKEUP state by writing 0011_B to FLXAnFRSUCC1.CMD[3:0] (WAKEUP command)
- To STARTUP state by writing 0100_B to FLXAnFRSUCC1.CMD[3:0] (RUN command)

Internal counters and the CC status flags are reset when the CC enters STARTUP state.

CAUTION

Status bits FLXAnFRMHDS[14:0], registers FLXAnFRTXRQ1 to FLXAnFRTXRQ4, and status data stored in the Message RAM are not affected by the transition of the POC from READY to STARTUP state.

18.3.6.5 WAKEUP State

The description below is intended to help configuring wakeup for the FlexRay IP-module. A detailed description of the wakeup procedure together with the respective SDL diagrams can be found in the FlexRay protocol specification v2.1, section 7.1.

The CC enters this state

- When exiting from READY state by writing 0011_B to bits FLXAnFRSUCC1.CMD[3:0] (WAKEUP command).

The CC exits from this state to READY state

- After complete non-aborted transmission of wakeup pattern
- After WUP reception
- After detecting a WUP collision
- After reception of a frame header
- By writing 0010_B to bits FLXAnFRSUCC1.CMD[3:0] (READY command)

The cluster wakeup must precede the communication startup in order to ensure that all nodes in a cluster are awake. The minimum requirement for a cluster wakeup is that all bus drivers are supplied with power. A bus driver has the ability to wake up the other components of its node when it receives a wakeup pattern on its channel. At least one node in the cluster needs an external wakeup source.

The Host completely controls the wakeup procedure. It is informed about the state of the cluster by the bus driver and the CC and configures bus guardian (if available) and CC to perform the cluster wakeup. The CC provides to the Host the ability to transmit a special wakeup pattern on each of its available channels separately. The CC needs to recognize the wakeup pattern only during WAKEUP state.

Wakeup may be performed on only one channel at a time. The Host has to configure the wakeup channel while the CC is in CONFIG state by writing the FLXAnFRSUCC1.WUCS bit. The CC ensures that ongoing communication on this channel is not disturbed. The CC cannot guarantee that all nodes connected to the configured channel awake upon the transmission of the wakeup pattern, since these nodes cannot give feedback until the startup phase. The wakeup procedure enables single-channel devices in a two-channel system to trigger the wakeup, by only transmitting the wakeup pattern on the single channel to which they are connected. Any coldstart node that deems a system startup necessary will then wake the remaining channel before initiating communication startup.

The wakeup procedure tolerates any number of nodes simultaneously trying to wakeup a single channel and resolves this situation such that only one node transmits the pattern. Additionally the wakeup pattern is collision resilient, so even in the presence of a fault causing two nodes to simultaneously transmit a wakeup pattern, the resulting collided signal can still wake the other nodes.

After wakeup the CC returns to READY state and signals the change of the wakeup status to the Host by setting flag FLXAnFRSIR.WST. The wakeup status vector can be read from FLXAnFRCCSV.WSV[2:0]. If a valid wakeup pattern was received also either flag FLXAnFRSIR.WUPA or flag FLXAnFRSIR.WUPB is set to 1.

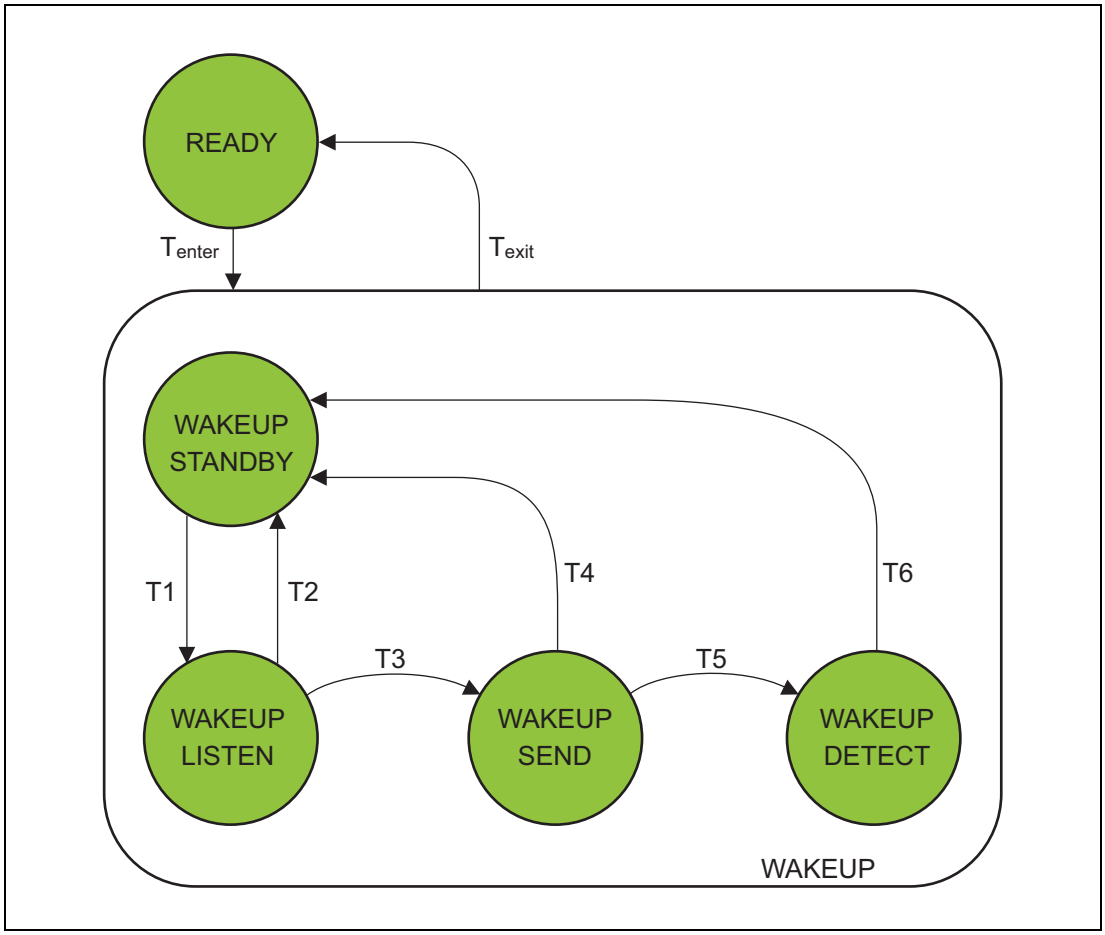

Figure 18.8 Structure of POC State WAKEUP

Table 18.98 State Transitions WAKEUP

T#	Condition	From	To
enter	Host commands change to WAKEUP state by writing 0011 to FLXAnFRSUCC1.CMD[3:0] (WAKEUP command)	READY	WAKEUP
1	CHI command WAKEUP triggers wakeup FSM to transit to WAKEUP_LISTEN state	WAKEUP_STANDBY	WAKEUP_LISTEN
2	Received WUP on wakeup channel selected by bit FLXAnFRSUCC1.WUCS or frame header on either available channel	WAKEUP_LISTEN	WAKEUP_STANDBY
3	Timer event	WAKEUP_LISTEN	WAKEUP_SEND
4	Complete, non-aborted transmission of wakeup pattern	WAKEUP_SEND	WAKEUP_STANDBY
5	Collision detected	WAKEUP_SEND	WAKEUP_DETECT
6	Wakeup timer expired or WUP detected on wakeup channel selected by bit FLXAnFRSUCC1.WUCS or frame header received on either available	WAKEUP_DETECT	WAKEUP_STANDBY
exit	Wakeup completed (after T2 or T4 or T6) or Host commands change to READY state by writing 0010 to FLXAnFRSUCC1.CMD[3:0] (READY command). This command also resets the wakeup FSM to WAKEUP_STANDBY state	WAKEUP	READY

The WAKEUP_LISTEN state is controlled by the wakeup timer and the wakeup noise timer. The two timers are controlled by the parameters listen timeout (bits FLXAnFRSUCC2.LT[20:0]) and listen timeout noise (bits FLXAnFRSUCC2.LTN[3:0]). Listen timeout enables a fast cluster wakeup in case of a noise free environment, while listen timeout noise enables wakeup under more difficult conditions regarding noise interference.

In WAKEUP_SEND state the CC transmits the wakeup pattern on the configured channel and checks for collisions. After return from wakeup the Host has to bring the CC into STARTUP state by CHI command RUN.

In WAKEUP_DETECT state the CC attempts to identify the reason for the wakeup collision detected in WAKEUP_SEND state. The monitoring is bounded by the expiration of listen timeout as configured by bits FLXAnFRSUCC2.LT[20:0]. Either the detection of a wakeup pattern indicating a wakeup attempt by another node or the reception of a frame header indicating ongoing communication, causes the direct transition to READY state. Otherwise WAKEUP_DETECT is left after expiration of listen timeout; in this case the reason for wakeup collision is unknown.

The Host has to be aware of possible failures of the wakeup and act accordingly. It is advisable to delay any potential startup attempt of the node having instigated the wakeup by the minimal time it takes another coldstart node to become awake and to be configured.

The FlexRay Protocol Specification recommends that two different CCs shall awake the two channels.

(1) Host activities

The host must coordinate the wakeup of the two channels and must decide whether, or not, to wake a specific channel. The sending of the wakeup pattern is initiated by the Host. The wakeup pattern is detected by the remote BDs and signaled to their local Host.

Wakeup procedure controlled by Host (single-channel wakeup):

- Configure the CC in CONFIG state
  - Select wakeup channel by programming bit FLXAnFRSUCC1.WUCS
- Check local BDs whether a WUP was received
- Activate BD of selected wakeup channel
- Command CC to enter READY state
- Command CC to start wakeup on the configured channel by writing 0011 to bits FLXAnFRSUCC1.CMD[3:0]
  - CC enters WAKEUP
  - CC returns to READY state and signals status of wakeup attempt to the Host
- Wait predefined time to allow the other nodes to wakeup and configure themselves
- Coldstart node:
  - In a dual channel cluster wait for WUP on the other channel
  - Set coldstart inhibit flag FLXAnFRCCSV.CSI by writing 1001_B to bits FLXAnFRSUCC1.CMD[3:0] (ALLOW_COLDSTART command)
- Command CC to enter startup by writing 0100_B to bits FLXAnFRSUCC1.CMD[3:0] (RUN command)

Wakeup procedure triggered by BD:

- Wakeup recognized by BD
- BD triggers power-up of Host (if required)
- BD signals wakeup event to Host
- Host configures its local CC
- If necessary, Host commands wakeup of second channel and waits predefined time to allow the other nodes to wakeup and configure themselves
- Host commands CC to enter STARTUP state by writing 0100 to bits FLXAnFRSUCC1.CMD[3:0] (RUN command)

(2) Wakeup pattern (WUP)

The wakeup pattern (WUP) is composed of at least two wakeup symbols (WUS). Wakeup symbol and wakeup pattern are configured by registers FLXAnFRPRTC1 and FLXAnFRPRTC2.

- Single channel wakeup, wakeup symbol may not be sent on both channels at the same time
- Wakeup symbol collision resilient for at least two sending nodes (two overlapping wakeup symbols always recognizable)
- Wakeup symbol must be configured identical in all nodes of a cluster
- Wakeup symbol transmit low time configured by bits FLXAnFRPRTC2.TXL[5:0]
- Wakeup symbol idle time used to listen for activity on the bus, configured by bits FLXAnFRPRTC2.TXI[7:0]
- A wakeup pattern composed of at least two Tx-wakeup symbols needed for wakeup
- Number of repetitions configurable by bits FLXAnFRPRTC1.RWP[5:0] (2 to 63 repetitions)
- Wakeup symbol receive window length configured by bits FLXAnFRPRTC1.RXW[8:0]
- Wakeup symbol receive low time configured by bits FLXAnFRPRTC2.RXL[5:0]
- Wakeup symbol receive idle time configured by bits FLXAnFRPRTC2.RXI[5:0]

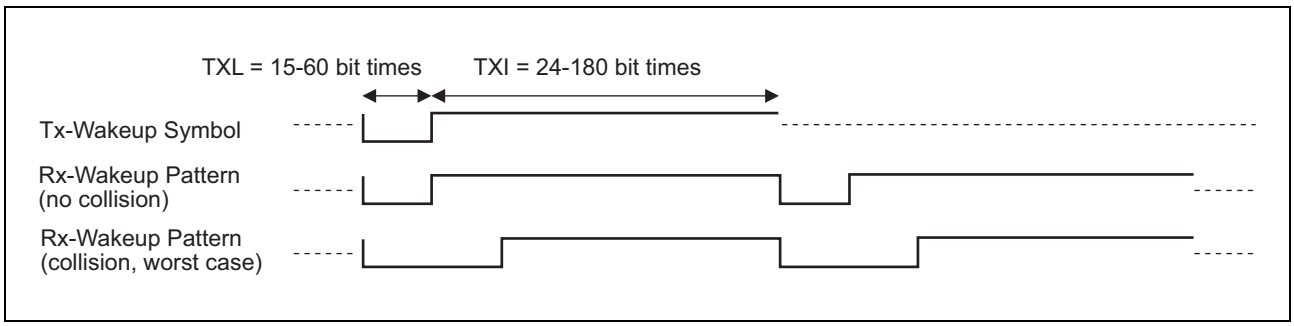

Figure 18.9 Timing of Wakeup Pattern

18.3.6.6 STARTUP State

The description below is intended to help configuring startup for the FlexRay IP-module. A detailed description of the startup procedure together with the respective SDL diagrams can be found in the *FlexRay protocol specification v2.1*, *section 7.2*.

Any node entering STARTUP state that has coldstart capability should assure that both channels attached have been awakened before initiating coldstart.

It cannot be assumed that all nodes and stars need the same amount of time to become completely awake and to be configured. Since at least two nodes are necessary to start up the cluster communication, it is advisable to delay any potential startup attempt of the node having instigated the wakeup by the minimal amount of time it takes another coldstart node to become awake, to be configured and to enter startup. It may require several hundred milliseconds (depending on the hardware used) before all nodes and stars are completely awakened and configured.

Startup is performed on all channels synchronously. During startup, a node only transmits startup frames. Startup frames are both sync frames and null frames during startup.

A fault-tolerant, distributed startup strategy is specified for initial synchronization of all nodes. In general, a node may enter NORMAL_ACTIVE state via (see **Figure 18.10**):

- Coldstart path initiating the schedule synchronization (LeadingColdstart node)
- Coldstart path joining other coldstart nodes (FollowingColdstart node)
- Integration path integrating into an existing communication schedule (all other nodes)

A coldstart attempt begins with the transmission of a collision avoidance symbol (CAS). Only a coldstart node that had transmitted the CAS transmits frames in the first four cycles after the CAS, it is then joined firstly by the other coldstart nodes and afterwards by all other nodes.

A coldstart node has bits FLXAnFRSUCC1.TXST and FLXAnFRSUCC1.TXSY set to 1. Message buffer 0 holds the key slot ID which defines the slot number where the startup frame is send. In the frame header of the startup frame the startup frame indicator bit is set to 1.

In clusters consisting of three or more nodes, at least three nodes shall be configured to be coldstart nodes. In clusters consisting of two nodes, both nodes must be coldstart nodes. At least two fault-free coldstart nodes are necessary for the cluster to startup.

Each startup frame must also be a sync frame; therefore each coldstart node will also be a sync node. The number of coldstart attempts is configured by bits FLXAnFRSUCC1.CSA[4:0].

A non-coldstart node requires at least two startup frames from distinct nodes for integration. It may start integration before the coldstart nodes have finished their startup. It will not finish its startup until at least two coldstart nodes have finished their startup.

Both non-coldstart nodes and coldstart nodes start passive integration via the integration path as soon as they receive sync frames from which to derive the TDMA schedule information. During integration, the node has to adapt its own clock to the global clock (rate and offset) and has to make its cycle time consistent with the global schedule observable at the network. Afterwards, these settings are checked for consistency with all available network nodes. The node can only leave the integration phase and actively participate in communication when these checks are passed.

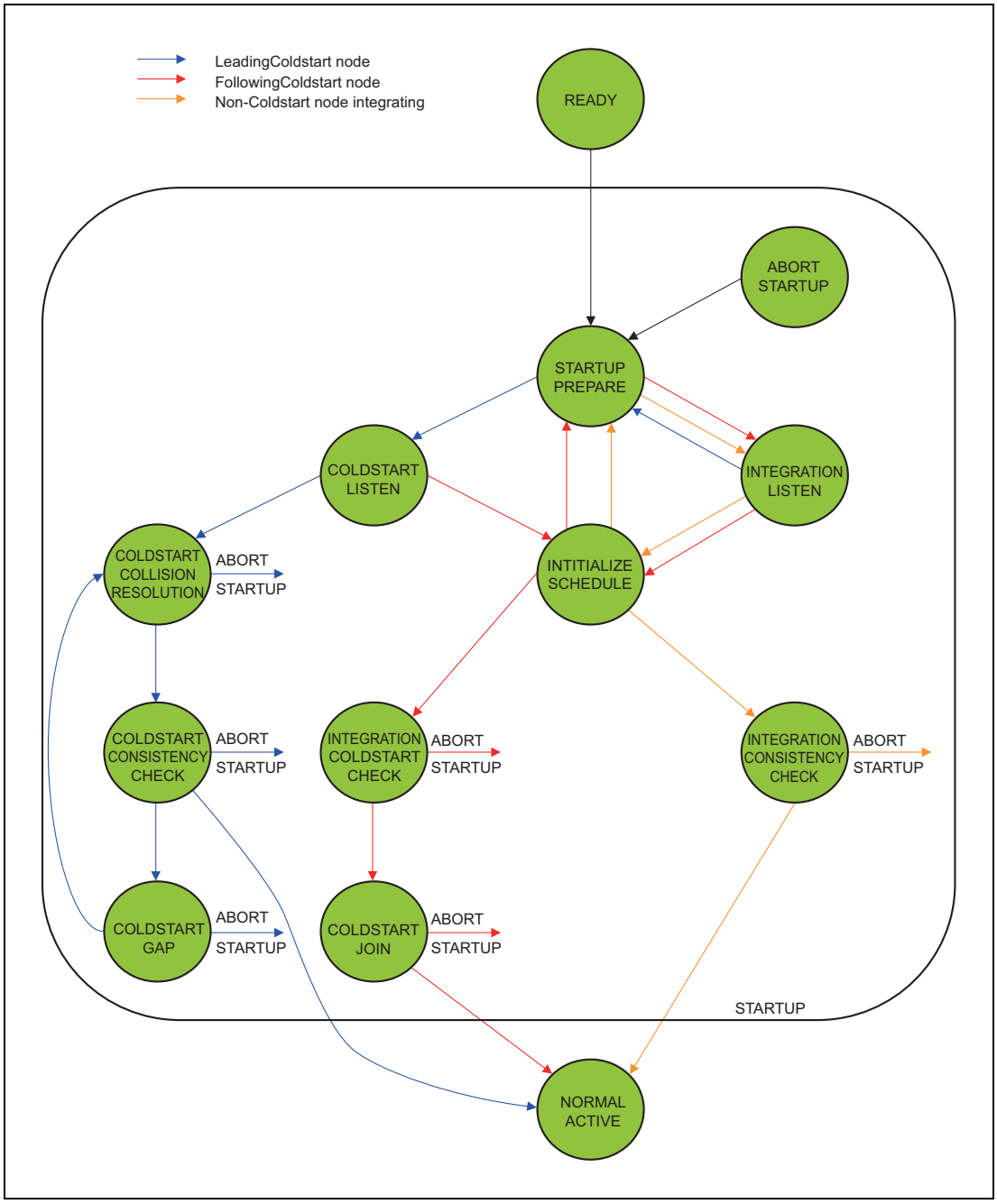

Figure 18.10 State Diagram Time-Triggered Startup

(1) Coldstart Inhibit Mode

In coldstart inhibit mode the node is prevented from initializing the TDMA communication schedule. If bit FLXAnFRCCSV.CSI is set to 1, the node is not allowed to initialize the cluster communication, i.e. entering the coldstart path is prohibited. The node is allowed to integrate to a running cluster or to transmit startup frames after another coldstart node started the initialization of the cluster communication.

The coldstart inhibit bit FLXAnFRCCSV.CSI is set to 1 whenever the POC enters READY state. The bit has to be cleared under control of the Host by CHI command ALLOW_COLDSTART (bits FLXAnFRSUCC1.CMD[3:0] = "1001_B")

(2) Startup Timeouts

The CC supplies two different µT timers supporting two timeout values, startup timeout and startup noise timeout. The two timers are started when the CC enters the COLDSTART_LISTEN state. The expiration of either of these timers causes the node to leave the initial sensing phase (COLDSTART_LISTEN state) with the intention of starting up communication.

CAUTION

The startup and startup noise timers are identical with the wakeup and wakeup noise timers and use the same configuration values FLXAnFRSUCC2.LT[20:0] and FLXAnFRSUCC2.LTN[3:0].

(a) Startup Timeout

The startup timeout limits the listen time used by a node to determine if there is already communication between other nodes or at least one coldstart node actively requesting the integration of others. The startup timer is configured by programming bits FLXAnFRSUCC2.LT[20:0] (see **Section 18.2.6.2, FLXAnFRSUCC2 — FlexRay SUC Configuration Register 2**).

The startup timeout is:

pdListenTimeout = FLXAnFRSUCC2.LT[20:0]

The startup timer is restarted upon:

- Entering the COLDSTART_LISTEN state
- Both channels reaching idle state while in COLDSTART_LISTEN state

The startup timer is stopped:

- If communication channel activity is detected on one of the configured channels while the node is in the COLDSTART_LISTEN state
- When the COLDSTART_LISTEN state is left

Once the startup timeout expires, neither an overflow nor a cyclic restart of the timer is performed. The timer status is kept for further processing by the startup state machine.

(b) Startup Noise Timeout

At the same time the startup timer is started for the first time (transition from STARTUP_PREPARE state to COLDSTART_LISTEN state), the startup noise timer is started. This additional timeout is used to improve reliability of the startup procedure in the presence of noise. The startup noise timeout is configured by programming bits FLXAnFRSUCC2.LTN[3:0] (see **Section 18.2.6.2, FLXAnFRSUCC2 — FlexRay SUC Configuration Register 2**).

The startup noise timeout:

pdListenTimeout × gListenNoise = FLXAnFRSUCC2.LT[20:0] × (FLXAnFRSUCC2.LTN[3:0] + 1)

The startup noise timer is restarted upon:

- Entering the COLDSTART_LISTEN state
- Reception of correctly decoded headers or CAS symbols while the node is in COLDSTART_LISTEN state

The startup noise timer is stopped when the COLDSTART_LISTEN state is left.

Once the startup noise timeout expires, neither an overflow nor a cyclic restart of the timer is performed. The status is kept for further processing by the startup state machine. Since the startup noise timer won't be restarted when random channel activity is sensed, this timeout defines the fall-back solution that guarantees that a node will try to start up the communication cluster even in the presence of noise.

(3) Path of Leading Coldstart Node (initiating coldstart)

When a coldstart node enters COLDSTART_LISTEN, it listens to its attached channels.

If no communication is detected, the node enters the COLDSTART_COLLISION_RESOLUTION state and commences a coldstart attempt. The initial transmission of a CAS symbol is succeeded by the first regular cycle. This cycle has the number zero.

From cycle zero on, the node transmits its startup frame. Since each coldstart node may perform a coldstart attempt, it may occur that several nodes simultaneously transmit the CAS symbol and enter the coldstart path. This situation is resolved during the first four cycles after CAS transmission.

As soon as a node that initiates a coldstart attempt receives a CAS symbol or a frame header during these four cycles, it re-enters the COLDSTART_LISTEN state. Thereby, only one node remains in this path. In cycle four, other coldstart nodes begin to transmit their startup frames.

After four cycles in COLDSTART_COLLISION_RESOLUTION state, the node that initiated the coldstart enters the COLDSTART_CONSISTENCY_CHECK state. It collects all startup frames from cycle four and five and performs the clock correction. If the clock correction does not deliver any errors and it has received at least one valid startup frame pair, the node leaves COLDSTART_CONSISTENCY_CHECK and enters NORMAL_ACTIVE state.

The number of coldstart attempts that a node is allowed to perform is configured by FLXAnFRSUCC1.CSA[4:0]. The number of remaining coldstarts attempts can be read from FLXAnFRCCSV.RCA[4:0]. The number of remaining coldstart attempts is reduced by one for each attempted coldstart. A node may enter the COLDSTART_LISTEN state only if this value is larger than one and it may enter the COLDSTART_COLLISION_RESOLUTION state only if this value is larger than zero. If the number of coldstart attempts is one, coldstart is inhibited but integration is still possible.

(4) Path of Following Coldstart Node (responding to Leading Coldstart Node)

When a coldstart node enters the COLDSTART_LISTEN state, it tries to receive a valid pair of startup frames to derive its schedule and clock correction from the leading coldstart node.

As soon as a valid startup frame has been received the INITIALIZE_SCHEDULE state is entered. If the clock synchronization can successfully receive a matching second valid startup frame and derive a schedule from this, the INTEGRATION_COLDSTART_CHECK state is entered.

In INTEGRATION_COLDSTART_CHECK state it is assured that the clock correction can be performed correctly and that the coldstart node from which this node has initialized its schedule is still available. The node collects all sync frames and performs clock correction in the following double-cycle. If clock correction does not signal any errors and if the node continues to receive sufficient frames from the same node it has integrated on, the COLDSTART_JOIN state is entered.

In COLDSTART_JOIN state following coldstart nodes begin to transmit their own startup frames and continue to do so in subsequent cycles. Thereby, the leading coldstart node and the nodes joining it can check if their schedules agree with each other. If the clock correction signals any error, the node aborts the integration attempt. If a node in this state sees at least one valid startup frame during all even cycles in this state and at least one valid startup frame pair during all double cycles in this state, the node leaves COLDSTART_JOIN state and enters NORMAL_ACTIVE state. Thereby it leaves STARTUP at least one cycle after the node that initiated the coldstart.

(5) Path of Non-coldstart Node

When a non-coldstart node enters the INTEGRATION_LISTEN state, it listens to its attached channels.

As soon as a valid startup frame has been received, the INITIALIZE_SCHEDULE state is entered. If the clock synchronization can successfully receive a matching second valid startup frame and derive a schedule from this, the INTEGRATION_CONSISTENCY_CHECK state is entered.

In INTEGRATION_CONSISTENCY_CHECK state the node verifies that the clock correction can be performed correctly and that enough coldstart nodes (at least 2) are sending startup frames that agree with the node's own schedule. Clock correction is activated, and if any errors are signaled, the integration attempt is aborted.

During the first even cycle in this state, either two valid startup frames or the startup frame of the node that this node has integrated on must be received; otherwise the node aborts the integration attempt.

During the first double-cycle in this state, either two valid startup frame pairs or the startup frame pair of the node that this node has integrated on must be received; otherwise the node aborts the integration attempt.

If after the first double-cycle less than two valid startup frames are received within an even cycle, or less than two valid startup frame pairs are received within a double-cycle, the startup attempt is aborted.

Nodes in this state need to see two valid startup frame pairs for two consecutive double-cycles each to be allowed to leave STARTUP and enter NORMAL_OPERATION. Consequently, they leave startup at least one double-cycle after the node that initiated the coldstart and only at the end of a cycle with an odd cycle number.

18.3.6.7 NORMAL_ACTIVE State

As soon as the node that transmitted the first CAS symbol (resolving the potential access conflict and entering STARTUP via coldstart path) and one additional node have entered the NORMAL_ACTIVE state, the startup phase for the cluster has finished. In the NORMAL_ACTIVE state, all configured messages are scheduled for transmission. This includes all data frames as well as the sync frames. Rate and offset measurement is started in all even cycles (even / odd cycle pairs required).

In NORMAL_ACTIVE state the CC supports regular communication functions

- The CC performs transmissions and reception on the FlexRay bus as configured
- Clock synchronization is running
- The Host interface is operational

The CC exits from that state to

- HALT state by writing 0110_B to bits FLXAnFRSUCC1.CMD[3:0] (HALT command, at the end of the current cycle)
- HALT state by writing 0111_B to bits FLXAnFRSUCC1.CMD[3:0] (FREEZE command, immediately)
- HALT state due to change of the error state from ACTIVE to COMM_HALT
- NORMAL_PASSIVE state due to change of the error state from ACTIVE to PASSIVE
- READY state by writing 0010_B to bits FLXAnFRSUCC1.CMD[3:0] (READY command)

18.3.6.8 NORMAL_PASSIVE State

NORMAL_PASSIVE state is entered from NORMAL_ACTIVE state when the error state changes from ACTIVE to PASSIVE.

In NORMAL_PASSIVE state, the node is able to receive all frames (node is fully synchronized and performs clock synchronization). Contrary to the NORMAL_ACTIVE state, the node does not actively participate in communication, i.e. neither symbols nor frames are transmitted.

In NORMAL_PASSIVE state

- The CC performs reception on the FlexRay bus
- The CC does not transmit any frames or symbols on the FlexRay bus
- Clock synchronization is running
- The Host interface is operational

The CC exits from this state to

- HALT state by writing 0110_B to bits FLXAnFRSUCC1.CMD[3:0] (HALT command, at the end of the current cycle)
- HALT state by writing 0111_B to bits FLXAnFRSUCC1.CMD[3:0] (FREEZE command, immediately)
- HALT state due to change of the error state from PASSIVE to COMM_HALT
- NORMAL_ACTIVE state due to change of the error state from PASSIVE to ACTIVE.
  The transition takes place when bits FLXAnFRCCEV.PTAC[4:0] equals bits FLXAnFRSUCC1.PTA[4:0] - 1
- To READY state by writing 0010_B to bits FLXAnFRSUCC1.CMD[3:0] (READY command)

18.3.6.9 HALT State

In this state all communication (reception and transmission) is stopped.

The CC enters this state

- By writing 0110_B to bits FLXAnFRSUCC1.CMD[3:0] (HALT command) while the CC is in NORMAL_ACTIVE or NORMAL_PASSIVE state
- By writing 0111_B to bits FLXAnFRSUCC1.CMD[3:0] (FREEZE command) from all states
- When exiting from NORMAL_ACTIVE state because the clock correction failed counter reached the “maximum without clock correction fatal” limit and FLXAnFRSUCC1.HCSE is set to 1
- When exiting from NORMAL_PASSIVE state because the clock correction failed counter reached the “maximum without clock correction fatal” limit and FLXAnFRSUCC1.HCSE is set to 1

The CC exits from this state to DEFAULT_CONFIG state

- By writing 0001_B to bits FLXAnFRSUCC1.CMD[3:0] (CONFIG command)

When the CC enters HALT state, all configuration and status data is maintained for analyzing purposes.

When the Host writes 0110_B to bits FLXAnFRSUCC1.CMD[3:0] (HALT command), the CC sets flag FLXAnFRCCSV.HRQ to 1 and enters HALT state at the next end of cycle.

When the Host writes 0111_B to bits FLXAnFRSUCC1.CMD[3:0] (FREEZE command), the CC enters HALT state immediately and sets flag FLXAnFRCCSV.FSI to 1.

The POC state from which the transition to HALT state took place can be read from FLXAnFRCCSV.PSL[5:0].

18.3.7 Network Management

The accrued Network Management (NM) vector can be read from registers FLXAnFRNMV1 to FLXAnFRNMV3. The CC performs a bit-wise OR operation over all NM vectors out of all received valid NM frames with the Payload Preamble Indicator (PPI) bit set. Only static frames may be configured to hold NM information. The CC updates the NM vector at the end of each cycle.

The length of the NM vector can be configured from 0 to 12 bytes by bits FLXAnFRNEMC.NML[3:0]. The NM vector length must be configured identically in all nodes of a cluster.

To configure a transmit buffer to send FlexRay frames with the PPI bit set as 1, bit PPIT in the header section of the respective transmit buffer has to be set to 1 via bit FLXAnFRWRHS1.PPIT. In addition the Host has to write the NM information to the data section of the respective transmit buffer.

The evaluation of the NM vector has to be done by the application running on the Host.

CAUTIONS

1. **In case a message buffer is configured for transmission / reception of network management frames, the payload length configured in header 2 of that message buffer should be equal or greater than the length of the NM vector configured by the FLXAnFRNEMC.NML[3:0] bits.**
2. **When the CC transits to HALT state, the cycle count is not incremented and therefore the NM vector is not updated. In this case FLXAnFRNMV1 to FLXAnFRNMV3 holds the value from the cycle before.**

18.3.8 Filtering and Masking

Filtering is done by comparison of the configuration of assigned message buffers against actual slot and cycle counter values and channel ID (channel A, B). A message buffer is only updated / transmitted if the required matches occur.

Filtering is done on:

- Slot Counter
- Cycle Counter
- Channel ID

The following filter combinations for acceptance / transmit filtering are allowed:

- Slot Counter + Channel ID
- Slot Counter + Cycle Counter + Channel ID

All configured filters must match in order to store a received message in a message buffer.

CAUTION

For the FIFO the acceptance filter is configured by the FIFO Rejection Filter (FLXAnFRFRF) and the FIFO Rejection Filter Mask (FLXAnFRFRFM).

A message will be transmitted in the time slot corresponding to the configured frame ID on the configured channel(s). If cycle counter filtering is enabled the configured cycle filter value must also match.

18.3.8.1 Slot Counter Filtering

Every transmit and receive buffer contains a frame ID stored in the header section. This frame ID is compared against the actual slot counter value in order to assign receive and transmit buffers to the corresponding slot.

If two or more message buffers are configured with the same frame ID and channel ID, and if they have a atching cycle counter filter value for the same slot, then the message buffer with the lowest message buffer number is used.

18.3.8.2 Cycle Counter Filtering

Cycle counter filtering is based on the notion of a cycle set. For filtering purposes, a match is detected if any one of the elements of the cycle set is matched. The cycle set is defined by the cycle code field in header section 1 of each message buffer.

If message buffer 0 resp. 1 is configured to hold the startup / sync frame or the single slot frame by bits FLXAnFRSUCC1.TXST, FLXAnFRSUCC1.TXSY, and FLXAnFRSUCC1.TSM, cycle counter filtering for message buffer 0 resp. 1 shall be disabled.

CAUTION

Sharing of a static time slot via cycle counter filtering between different nodes of a FlexRay network is not allowed.

The set of cycle numbers belonging to a cycle set is determined as described in **Table 18.99**.

Table 18.99 Definition of cycle set

Cycle Code	Matching Cycle Counter Values
0b000000x	all Cycles
0b000001c	every second Cycle at (Cycle Count) mod2 = c
0b00001cc	every fourth Cycle at (Cycle Count) mod4 = cc
0b0001ccc	every eighth Cycle at (Cycle Count) mod8 = ccc
0b001cccc	every sixteenth Cycle at (Cycle Count) mod16 = cccc
0b01ccccc	every thirty-second Cycle at (Cycle Count) mod32 = ccccc
0b1cccccc	every sixty-fourth Cycle at (Cycle Count) mod64 = cccccc

Table 18.100 below gives some examples for valid cycle sets to be used for cycle counter filtering.

Table 18.100 Examples for valid cycle sets

Cycle Code	Matching Cycle Counter Values
0b0000011	1-3-5-7-…. -63
0b0000100	0-4-8-12-…. -60
0b0001110	6-14-22-30-…. -62
0b0011000	8-24-40-56
0b0100011	3-35
0b1001001	9

The received message is stored only if the cycle counter value of the cycle during which the message is received matches an element of the receive buffer's cycle set. Channel ID and frame ID must also be met.

The content of a transmit buffer is transmitted on the configured channel(s) when an element of the cycle set matches the current cycle counter value. Channel ID and frame ID must also be met.

18.3.8.3 Channel ID Filtering

There is a 2-bit channel filtering field (CH) located in the header section of each message buffer in the Message RAM. It serves as a filter for receive buffers, and as a control field for transmit buffers (see **Table 18.101**).

Table 18.101 Channel filtering configuration

CH[1:0]	**Transmit Buffer** transmit frame	**Receive Buffer store valid receive frame**
00	no transmission	ignore frame
01	on channel A	received on channel A
10	on channel B	received on channel B
11	on both channels (static segment only)	received on channel A or B (store first semantically valid frame, static segment only)

The contents of a transmit buffer is transmitted on the channels specified in the channel filtering field when the slot counter filtering and cycle counter filtering criteria are also met. Only in static segment a transmit buffer may be set up for transmission on both channels (CH = “11_B”).

Valid received frames are stored if they are received on the channels specified in the channel filtering field when the slot counter filtering and cycle counter filtering criteria are also met. Only in static segment a receive buffer may be setup for reception on both channels (CH = “11”).

CAUTION

If a message buffer is configured for the dynamic segment and both bits of the channel filtering field are set to 1, no frames are transmitted resp. received frames are ignored (same function as CH = “00”).

18.3.8.4 FIFO Filtering

For FIFO filtering registers FLXAnFRFRF and FLXAnFRFRFM are used. The FIFO filter consists of channel filter bits FLXAnFRFRF.CH[1:0], frame ID filter bits FLXAnFRFRF.FID[10:0], and cycle counter filter bits FLXAnFRFRF.CYF[6:0]. Registers FLXAnFRFRF and FLXAnFRFRFM can be configured in DEFAULT_CONFIG or CONFIG state only. The filter configuration in the header section of message buffers belonging to the FIFO is ignored.

The 7-bit cycle counter filter determines the cycle set to which frame ID and channel rejection filter are applied. In cycles not belonging to the cycle set specified by FLXAnFRFRF.CYF, all frames are rejected.

A valid received frame is stored in the FIFO if channel ID, frame ID, and cycle counter are not rejected by the configured rejection filter and rejection filter mask, and if there is no matching dedicated receive buffer.

18.3.9 Transmit Process

18.3.9.1 Static Segment

For the static segment, if there are several messages pending for transmission, the message with the frame ID corresponding to the next sending slot is selected for transmission.

The data section of transmit buffers assigned to the static segment can be updated until the end of the preceding time slot. This means that a transfer from the Input Buffer has to be started by writing to the Input Buffer Command Request register latest at this time.

18.3.9.2 Dynamic Segment

In the dynamic segment, if several messages are pending, the message with the highest priority (lowest frame ID) is selected next. In the dynamic segment different slot counter sequences on channel A and channel B are possible (concurrent sending of different frame IDs on both channels).

The data section of transmit buffers assigned to the dynamic segment can be updated until the end of the preceding slot. This means that a transfer from the Input Buffer has to be started by writing to the Input Buffer Command Request register latest at this time.

The start of latest transmit configured by bits FLXAnFRMHDC.SLT[12.0] defines the maximum minislot value allowed before inhibiting new frame transmission in the dynamic segment of the current cycle.

18.3.9.3 Transmit Buffers

FlexRay message buffers can be configured as transmit buffers by programming bit CFG in the header section of the respective message buffer to 1 via FLXAnFRWRHS1.

There exist the following possibilities to assign a transmit buffer to the CC channels:

- Static segment: channel A or channel B,
  channel A and channel B
- Dynamic segment: channel A or channel B

Message buffer 0 resp. 1 is dedicated to hold the startup frame, the sync frame, or the designated single slot frame as configured by FLXAnFRSUCC1.TXST, FLXAnFRSUCC1.TXSY, and FLXAnFRSUCC1.TSM. In this case, it can be reconfigured in DEFAULT_CONFIG or CONFIG state only. This ensures that any node transmits at most one startup / sync frame per communication cycle. Transmission of startup / sync frames from other message buffers is not possible.

All other message buffers configured for transmission in static or dynamic segment are reconfigurable during runtime depending on the configuration of bits FLXAnFRMRC.SEC[1.0] (see **Section 18.3.12.1, Reconfiguration of Message Buffers**). Due to the organization of the data partition in the Message RAM (reference by data pointer), reconfiguration of the configured payload length and the data pointer in the header section of a message buffer may lead to erroneous configurations.

If a message buffer is reconfigured (header section updated) during runtime, it may happen that this message buffer is not send out in the respective communication cycle.

The CC does not have the capability to calculate the header CRC. The Host is supposed to provide the header CRCs for all transmit buffers. If network management is required, the Host has to set the PPIT bit in the header section of the respective message buffer to 1 and write the network management information to the data section of the message buffer (see **Section 18.3.7, Network Management**).

The payload length field configures the payload length in 2-byte words. If the configured payload length of a static transmit buffer is shorter than the payload length configured for the static segment by

FLXAnFRMHDC.SFDL[6.0], the CC generates padding bytes to ensure that frames have proper physical length. The padding pattern is "0000_H".

CAUTION

In case of an odd payload length (PLC = 1, 3, 5, so on) the application has to write zero to the last 16 bit of the message buffers data section to ensure that the padding pattern is 0000_H.

Each transmit buffer provides a transmission mode flag TXM that allows the Host to configure the transmission mode for the transmit buffer. If this bit is set, the transmitter operates in the single-shot mode. If this bit is cleared, the transmitter operates in the continuous mode.

In single-shot mode the CC resets the respective TXR flag to 0 after transmission has completed. Now the Host may update the transmit buffer.

In continuous mode, the CC does not reset the respective transmission request flag TXR to 0 after successful transmission. In this case a frame is sent out each time the filter criteria match. The TXR flag can be reset to 0 by the Host by writing the respective message buffer number to the FLXAnFRIBCR register while bit FLXAnFRIBCM.STXRH is set to 0.

If two or more transmit buffers meet the filter criteria simultaneously, the transmit buffer with the lowest message buffer number will be transmitted in the respective slot.

18.3.9.4 Frame Transmission

The following steps are required to prepare a message buffer for transmission:

- Configure the transmit buffer in the Message RAM via registers FLXAnFRWRHS1 to FLXAnFRWRHS3
- Write the data section of the transmit buffer via register FLXAnFRWRDSm
- Transfer the configuration and message data from Input Buffer to the Message RAM by writing the number of the target message buffer to register FLXAnFRIBCR
- If configured in register FLXAnFRIBCM, the transmission request flag TXR for the respective message buffer will be set as soon as the transfer has completed, and the message buffer is ready for transmission.
- Check whether the message buffer has been transmitted by checking the respective TXR bit (TXR = 0) in the FLXAnFRTRXQ1 to FLXAnFRTRXQ4 registers (single-shot mode only).

After transmission has completed, the respective TXR flag in the FLXAnFRTXRQ1 to FLXAnFRTXRQ4 registers is reset to 0 (single-shot mode), and, if bit MBI in the header section of the message buffer is set to 1, bit FLXAnFRSIR.TXI is set to 1. If enabled, an interrupt is generated.

18.3.9.5 Null Frame Transmission

If in static segment the Host does not set the transmission request flag to 1 before transmit time, the CC transmits a null frame with the null frame indication bit set to 0 and the payload data set to zero.

In the following cases the CC transmits a null frame:

- If the message buffer with the lowest message buffer number matching the filter criteria does not have its transmission request flag set (TXR = 0) to 1.
- No transmit buffer configured for the slot has a cycle counter filter that matches the current cycle. In this case, no message buffer status FLXAnFRMBS is updated.

Null frames are not transmitted in the dynamic segment.

18.3.10 Receive Process

18.3.10.1 Dedicated Receive Buffers

A portion of the FlexRay message buffers can be configured as dedicated receive buffers by programming bit CFG in the header section of the respective message buffer to 0 via FLXAnFRWRHS1.

The following possibilities exist to assign a receive buffer to the CC channels:

- Static segment: channel A or channel B,
  channel A and channel B (the CC stores the first semantically valid frame)
- Dynamic segment: channel A or channel B

The CC transfers the payload data of valid received messages from the shift register of the FlexRay channel protocol controller (channel A or B) to the receive buffer with the matching filter configuration. A receive buffer stores all frame elements except the frame CRC.

All message buffers configured for reception in static or dynamic segment are reconfigurable during runtime depending on the configuration of bits FLXAnFRMRC.SEC[1.0] (see **Section 18.3.12.1, Reconfiguration of Message Buffers**). If a message buffer is reconfigured (header section updated) during runtime it may happen that in the respective communication cycle a received message is lost.

If two or more receive buffers meet the filter criteria simultaneously, the receive buffer with the lowest message buffer number is updated with the received message.

18.3.10.2 Frame Reception

The following steps are required to prepare a dedicated message buffer for reception:

- Configure the receive buffer in the Message RAM via registers FLXAnFRWRHS1 to FLXAnFRWRHS3
- Transfer the configuration from Input Buffer to the Message RAM by writing the number of the target message buffer to register FLXAnFRIBCR

Once these steps are performed, the message buffer functions as an active receive buffer and participates in the internal acceptance filtering process which takes place every time the CC receives a message. The first matching receive buffer is updated from the received message.

If a valid payload segment was stored in the data section of a message buffer, the respective ND flag in the FLXAnFRNDAT1 to FLXAnFRNDAT4 registers is set to 1, and, if bit MBI in the header section of that message buffer is set to 1, bit FLXAnFRSIR.RXI is set to 1. If enabled, an interrupt is generated.

In case that bit ND was already set to 1 when the Message Handler updates the message buffer, bit FLXAnFRMBS.MLST of the respective message buffer is set to 1 and the unprocessed message data is lost.

If no frame, a null frame, or a corrupted frame was received in a slot, the data section of the message buffer configured for this slot is not updated. In this case only the respective message buffer status FLXAnFRMBS is updated.

When the Message Handler changed the message buffer status FLXAnFRMBS in the header section of a message buffer, the respective MBC flag in the FLXAnFRMBSC1 to FLXAnFRMBSC4 registers is set to 1, and if bit MBI in the header section of that message buffer is set, bit FLXAnFRSIR.MBSI is set to 1. If enabled an interrupt is generated.

If the payload length of a received frame PLR is longer than the value programmed by PLC in the header section of the respective message buffer, the data field stored in the message buffer is truncated to that length.

To read a receive buffer from the Message RAM via the Output Buffer, proceed as described in **Section 18.3.12.2 (2), Data Transfer from Message RAM to Output Buffer**.

CAUTION

The ND and MBC flags are automatically cleared by the Message Handler when the payload data and the header of a received message have been transferred to the Output Buffer, respectively.

18.3.10.3 Null Frame Reception

The payload segment of a received null frame is not copied into the matching dedicated receive buffer. If a null frame has been received, only the message buffer status FLXAnFRMBS of the matching message buffer is updated from the received null frame. All bits in header 2 and 3 of the matching message buffer remain unchanged. They are updated from received data frames only.

When the Message Handler changed the message buffer status FLXAnFRMBS in the header section of a message buffer, the respective MBC flag in the FLXAnFRMBSC1 to FLXAnFRMBSC4 register is set to 1, and if bit MBI in the header section of that message buffer is set to 1, flag FLXAnFRSIR.MBSI is set to 1. If enabled, an interrupt is generated.

18.3.11 FIFO Function

18.3.11.1 Description

A portion of the message buffers can be configured as a cyclic First-In-First-Out (FIFO) buffer. The group of message buffers belonging to the FIFO is contiguous in the register map starting with the message buffer referenced by FLXAnFRMRC.FFB[7.0] and ending with the message buffer referenced by FLXAnFRMRC.LCB[7.0]. Up to 127 message buffers can be assigned to the FIFO.

Every valid incoming message not matching with any dedicated receive buffer but passing the programmable FIFO filter is stored into the FIFO. In this case frame ID, payload length, receive cycle count, and the message buffer status FLXAnFRMBS of the addressed FIFO message buffer are overwritten with frame ID, payload length, receive cycle count, and the status from the received frame. When Flag FLXAnFRSIR.RFNE is set to 1, it shows that the FIFO is not empty. When bit FLXAnFRSIR.RFCL is set to 1, it shows that the receive FIFO fill level (FLXAnFRFSR.RFFL[7.0]) is equal or greater than the critical level as configured by FLXAnFRFCL.CL. When bit FLXAnFREIR.RFO is set to1, it shows that a FIFO overrun has been detected. If interrupts are enabled, interrupt requests are generated.

If null frames are not rejected by the FIFO rejection filter, the null frames will be treated like data frames when they are stored into the FIFO.

There are two index registers associated with the FIFO. The PUT Index Register (PIDX) is an index to the next available location in the FIFO. When a new message has been received it is written into the message buffer addressed by the PIDX register. The PIDX register is then incremented and addresses the next available message buffer. If the PIDX register is incremented past the highest numbered message buffer of the FIFO, the PIDX register is loaded with the number of the first (lowest numbered) message buffer in the FIFO chain. The GET Index Register (GIDX) is used to address the next message buffer of the FIFO to be read. The GIDX register is incremented after transfer of the contents of a message buffer belonging to the FIFO to the Output Buffer. The PUT Index Register and the GET Index Register are not accessible by the Host.

The FIFO is completely filled when the PUT index (PIDX) reaches the value of the GET index (GIDX). When the next message is written to the FIFO before the oldest message has been read, both PUT index and GET index are incremented and the new message overwrites the oldest message in the FIFO. This will set FIFO overrun flag FLXAnFREIR.RFO to 1.

A FIFO non empty status is detected when the PUT index (PIDX) differs from the GET index (GIDX). In this case flag FLXAnFRSIR.RFNE is set to 1. This indicates that there is at least one received message in the FIFO. The FIFO empty, FIFO not empty, and the FIFO overrun states are explained in **Figure 18.11** for a three message buffer FIFO.

The programmable FlexRay FIFO Rejection Filter (FLXAnFRFRF) defines a filter pattern for messages to be rejected. The FIFO filter consists of channel filter, frame ID filter, and cycle counter filter. If bit FLXAnFRFRF.RSS is set to 1, all messages received in the static segment are rejected by the FIFO. If bit FLXAnFRFRF.RNF is set to 1, received null frames are not stored in the FIFO.

The FlexRay FIFO Rejection Filter Mask (FLXAnFRFRFM) specifies which bits of the frame ID filter in the FIFO Rejection Filter register are marked 'don't care' for rejection filtering.

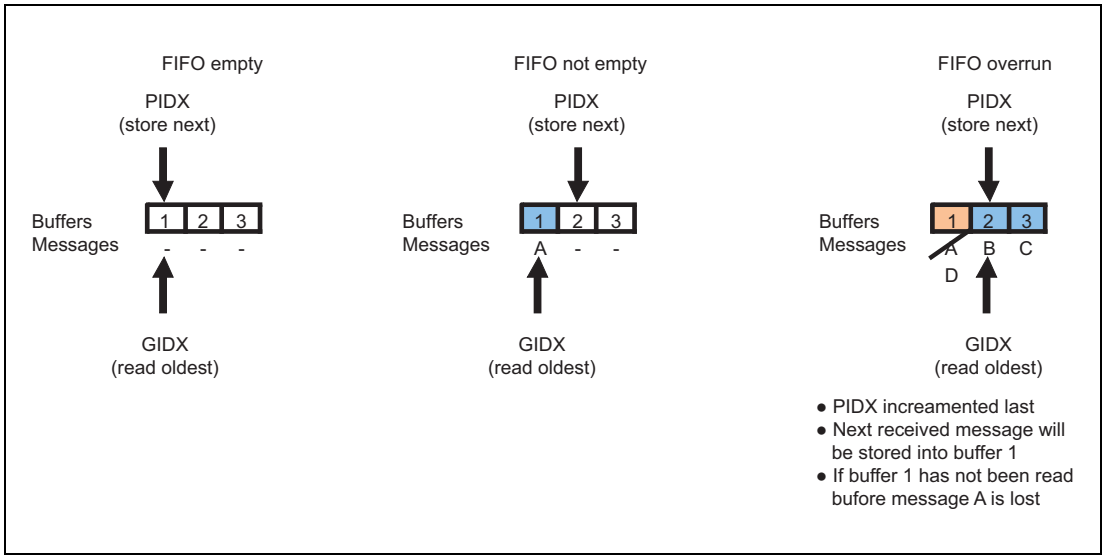

Figure 18.11 FIFO Status: Empty, Not Empty, Overrun

18.3.11.2 Configuration of the FIFO

(Re)configuration of message buffers belonging to the FIFO is only possible when the CC is in DEFAULT_CONFIG or CONFIG state. While the CC is in DEFAULT_CONFIG or CONFIG state, the FIFO function is not available.

For all message buffers belonging to the FIFO the payload length configured should be programmed to the same value via bits FLXAnFRWRHS2.PLC[6.0]. The data pointer to the first 32-bit word of the data section of the respective message buffer in the Message RAM has to be configured via bits FLXAnFRWRHS3.DP[10.0].

All information required for acceptance filtering is taken from the FIFO rejection filter and the FIFO rejection filter mask. The values configured in the header sections of the message buffers belonging to the FIFO are, with exception of DP and PLC, irrelevant.

CAUTIONS

1. **It is recommended to program the MBI bits of the message buffers belonging to the FIFO to 0 via FLXAnFRWRHS1.MBI to avoid generation of RX interrupts.**
2. **If the payload length of a received frame is longer than the value programmed by FLXAnFRWRHS2.PLC in the header section of the respective message buffer, the data field stored in a message buffer of the FIFO is truncated to that length.**

18.3.11.3 Access to the FIFO

(1) When the output buffer is used:

For FIFO access outside DEFAULT_CONFIG and CONFIG state, the Host has to trigger a transfer from the Message RAM to the Output Buffer by writing the number of the first message buffer of the FIFO (referenced by FLXAnFRMRC.FFB[7.0]) to the register FLXAnFROBCR. The Message Handler then transfers the message buffer addressed by the GET Index Register (GIDX) to the Output Buffer. After this transfer the GET Index Register (GIDX) is incremented.

(2) When the data transfer function is used:

The message received in FIFO can be transferred to the local RAM by using the output data transfer function. For the output data transfer function, see **Section 18.3.16.2, Output Data Transfer**, Output Data Transfer.

18.3.12 Message Handling

The Message Handler controls data transfers between the Input / Output Buffer and the Message RAM and between the Message RAM and the two TBFs.

Access to the message buffers stored in the Message RAM is done under control of the Message Handler state machine. This avoids conflicts between accesses of the two FlexRay channel protocol controllers and the Host to the Message RAM.

Frame IDs of message buffers assigned to the static segment have to be in the range from 1 to bits FLXAnFRGTUC7.NSS[9:0]. Frame IDs of message buffers assigned to the dynamic segment have to be in the range from bits FLXAnFRGTUC7.NSS[9:0] + 1 to 2047.

Received messages with no matching dedicated receive buffer (static or dynamic segment) are stored in the receive FIFO (if configured) if they pass the FIFO rejection filter.

Access of the Host to the message buffer contents using the input or output buffer function is described in this subsection. Access to the message buffer contents using the data transfer function is mentioned in **Section 18.3.16, Usage of Data Transfer**.

18.3.12.1 Reconfiguration of Message Buffers

In case that an application needs to operate with more than 128 different messages, static and dynamic message buffers may be reconfigured during FlexRay operation. This is done by updating the header section of the respective message buffer via Input Buffer registers FLXAnFRWRHS1 to FLXAnFRWRHS3.

Reconfiguration has to be enabled via control bit FLXAnFRMRC.SEC in the Message RAM Configuration register.

If a message buffer has not been transmitted / updated from a received frame before reconfiguration starts, the respective message is lost.

The point in time when a reconfigured message buffer is ready for transmission / reception according to the reconfigured frame ID depends on the actual state of the slot counter when the update of the header section has completed. Therefore it may happen that a reconfigured message buffer is not transmitted / updated from a received frame in the cycle where it was reconfigured.

The Message RAM is scanned according to **Table 18.102** below.

Table 18.102 Scan of Message RAM

Start of Scan in Slot	Scan for Slots
1	2 to 15, 1 (next cycle)
8	16 to 23, 1 (next cycle)
16	24 to 31, 1 (next cycle)
24	32 to 39, 1 (next cycle)
....	....

A Message RAM scan is terminated with the start of NIT regardless whether it has completed or not. The scan of the Message RAM for slots 2 to 15 starts at the beginning of slot 1 of the actual cycle. The scan of the Message RAM for slot 1 is done in the cycle before by checking in parallel to each scan of the Message RAM whether there is a message buffer configured for slot 1 of the next cycle.

The number of the first dynamic message buffer is configured by bits FLXAnFRMRC.FDB[7:0]. In case a Message RAM scan starts while the CC is in dynamic segment, the scan starts with the message buffer number configured by bit FLXAnFRMRC.FDB.

In case a message buffer should be reconfigured to be used in slot 1 of the next cycle, the following has to be considered:

- If the message buffer to be reconfigured for slot 1 is part of the “Static Buffers”, it will only be found if it is reconfigured before the last Message RAM scan in the static segment of the actual cycle evaluates this message buffer.
- If the message buffer to be reconfigured for slot 1 is part of the “Static + Dynamic Buffers”, it will be found if it is reconfigured before the last Message RAM scan in the actual cycle evaluates this message buffer.
- The start of NIT terminates the Message RAM scan. In case the Message RAM scan has not evaluated the reconfigured message buffer until this point in time, the message buffer will not be considered for the next cycle.

CAUTION

Reconfiguration of message buffers may lead to the loss of messages and therefore has to be used very carefully. In worst case (reconfiguration in consecutive cycles) it may happen that a message buffer is never transmitted / updated from a received frame.

18.3.12.2 Host access to Message RAM

The message transfer between Input Buffer and Message RAM as well as between Message RAM and Output Buffer is triggered by the Host by writing the number of the target / source message buffer to be accessed to FLXAnFRIBCR or FLXAnFROBCR register.

The FLXAnFRIBCM and FLXAnFROBCM registers can be used to write / read header and data section of the selected message buffer separately.

If bit FLXAnFRIBCM.STXR is set to = 1, the transmission request flag TXR of the selected message buffer is automatically set to 1 after the message buffer has been updated. If bit FLXAnFRIBCM.STXR is reset to 0, the transmission request flag TXR of the selected message buffer is reset. This can be used to stop transmission from message buffers operated in continuous mode.

Input Buffer (IBF) and Output Buffer (OBF) are build up as a double buffer structure. One half of this double buffer structure is accessible by the Host (IBF Host / OBF Host), while the other half (IBF Shadow / OBF Shadow) is accessed by the Message Handler for data transfers between IBF / OBF and Message RAM.

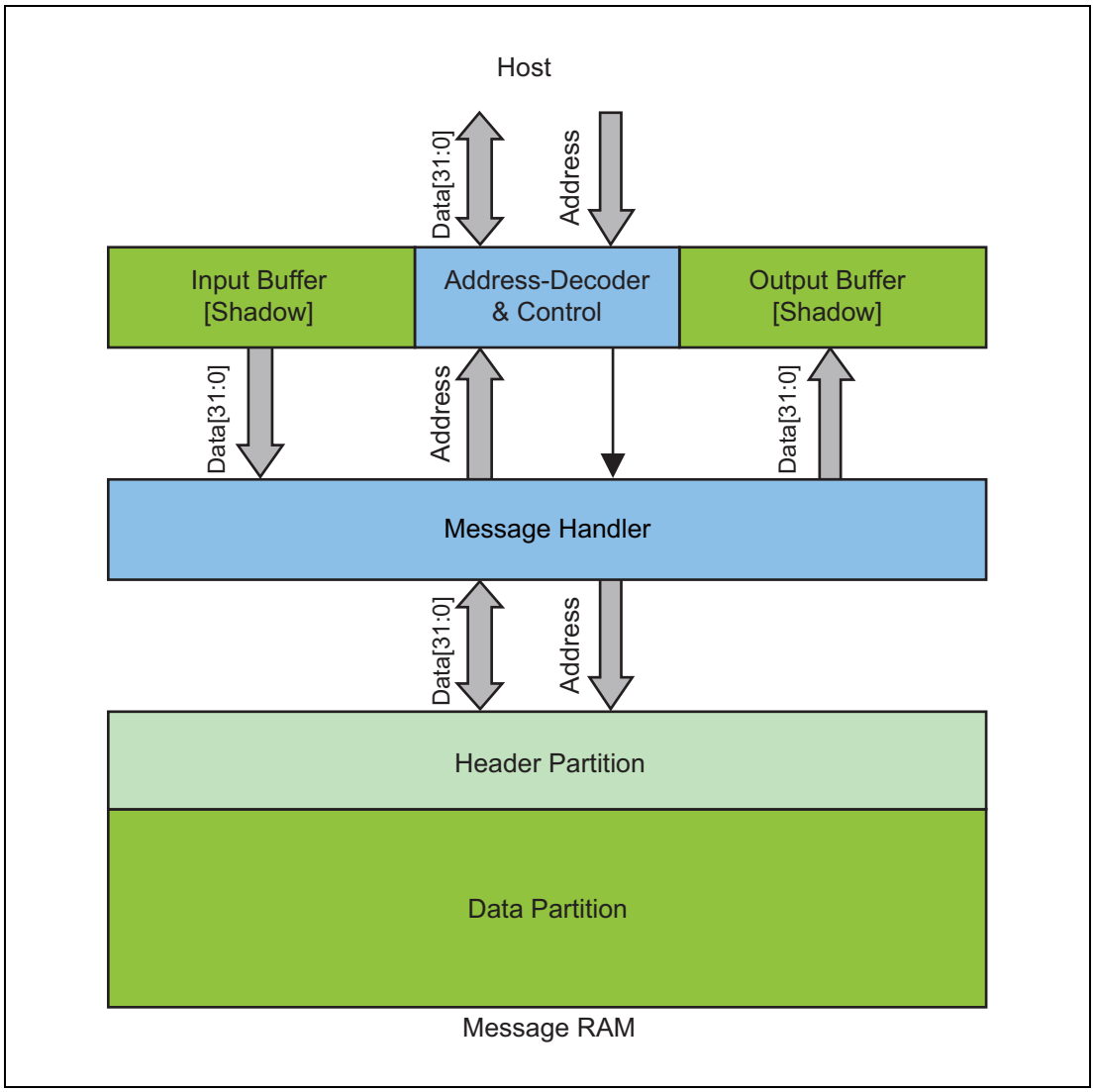

Figure 18.12 Host access to Message RAM

(1) Data Transfer from Input Buffer to Message RAM

To configure / update a message buffer in the Message RAM, the Host has to write the data to FLXAnFRWRDSm and the header to FLXAnFRWRHS1 to FLXAnFRWRHS3. The specific action is selected by configuring the FlexRay Input Buffer Command Mask FLXAnFRIBCM.

When the Host writes the number of the target message buffer in the Message RAM to bits FLXAnFRIBCR.IBRH[6:0], IBF Host and IBF Shadow are swapped (see **Figure 18.13**).

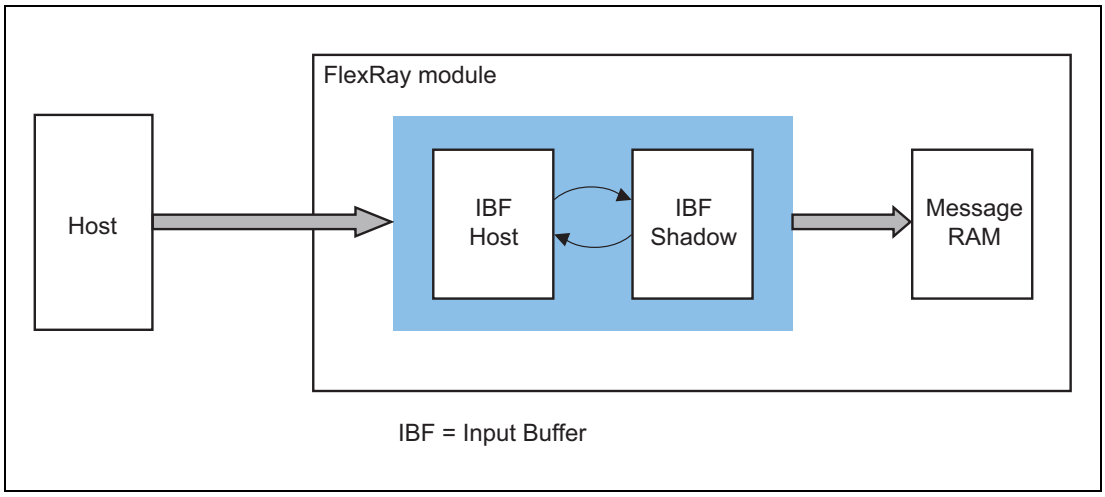

Figure 18.13 Double Buffer Structure Input Buffer

In addition the bits in the FLXAnFRIBCM and FLXAnFRIBCR registers are also swapped to keep them attached to the respective IBF section (see **Figure 18.14**).

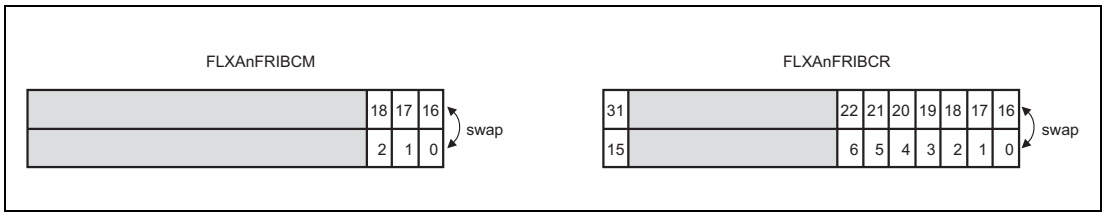

Figure 18.14 Swapping of FLXAnFRIBCM and FLXAnFRIBCR bits

With this write operation bit FLXAnFRIBCR.IBSYS is set to 1. The Message Handler then starts to transfer the contents of IBF Shadow to the message buffer in the Message RAM selected by bits FLXAnFRIBCR.IBRS[6:0].

While the Message Handler transfers the data from IBF Shadow to the target message buffer in the Message RAM, the Host may write the next message to IBF Host. After the transfer between IBF Shadow and the Message RAM has completed, bit FLXAnFRIBCR.IBSYS is set back to 0 and the next transfer to the Message RAM may be started by the Host by writing the respective target message buffer number to bits FLXAnFRIBCR.IBRH[6:0].

If a write access to bits FLXAnFRIBCR.IBRH[6:0] occurs while FLXAnFRIBCR.IBSYS is 1, FLXAnFRIBCR.IBSYH is set to 1. After completion of the ongoing data transfer from IBF Shadow to the Message RAM, IBF Host and IBF Shadow are swapped, FLXAnFRIBCR.IBSYH is reset to 0, FLXAnFRIBCR.IBSYS remains set to 1, and the next transfer to the Message RAM is started. In addition the message buffer numbers stored under bits FLXAnFRIBCR.IBRH[6:0] and FLXAnFRIBCR.IBRS[6:0] and the command mask flags are also swapped.

Example of a 8/16/32-bit Host access sequence:

Configure / update k-th message buffer via IBF

- Wait until FLXAnFRIBCR.IBSYH is reset
- Write data section to FLXAnFRWRDSm
- Write header section to FLXAnFRWRHS1 to FLXAnFRWRHS3
- Write Command Mask: write FLXAnFRIBCM.STXRH, FLXAnFRIBCM.LDSH, FLXAnFRIBCM.LHSH
- Demand data transfer to target message buffer: write FLXAnFRIBCR.IBRH[6:0]

Configure / update (k+1)th message buffer via IBF

- Wait until FLXAnFRIBCR.IBSYH is reset
- Write data section to FLXAnFRWRDSm
- Write header section to FLXAnFRWRHS1 to FLXAnFRWRHS3
- Write Command Mask: write FLXAnFRIBCM.STXRH, FLXAnFRIBCM.LDSH, FLXAnFRIBCM.LHSH
- Demand data transfer to target message buffer: set bits FLXAnFRIBCR.IBRH[6:0]

CAUTION

Any write access to IBF while bit FLXAnFRIBCR.IBSYH is 1 will set bit FLXAnFREIR.IIBA to 1. In this case the write access has no effect.

Table 18.103 Assignment of FLXAnFRIBCM Bits

Pos.	Access	Bit	Function
18	R	STXRS	Set Transmission Request Shadow ongoing or finished
17	R	LDSS	Load Data Section Shadow ongoing or finished
16	R	LHSS	Load Header Section Shadow ongoing or finished
2	R/W	STXRH	Set Transmission Request Host
1	R/W	LDSH	Load Data Section Host
0	R/W	LHSH	Load Header Section Host

Table 18.104 Assignment of FLXAnFRIBCR Bits

Pos.	Access	Bit	Function
31	R	IBSYS	IBF Busy Shadow, signals ongoing transfer from IBF Shadow to Message RAM
22 to 16	R	IBRS[6:0]	IBF Request Shadow, number of message buffer currently / lately updated
15	R	IBSYH	IBF Busy Host, transfer request pending for message buffer referenced by IBRH[6:0]
6 to 0	R/W	IBRH[6:0]	IBF Request Host, number of message buffer to be updated next

(2) Data Transfer from Message RAM to Output Buffer

To read a message buffer from the Message RAM, the Host has to write to register FLXAnFROBCR to trigger the data transfer as configured in FLXAnFROBCM. After the transfer has completed, the Host can read the transferred data from FLXAnFRRDDSm, FLXAnFRRDHS1 to FLXAnFRRDHS3, and FLXAnFRMBS.

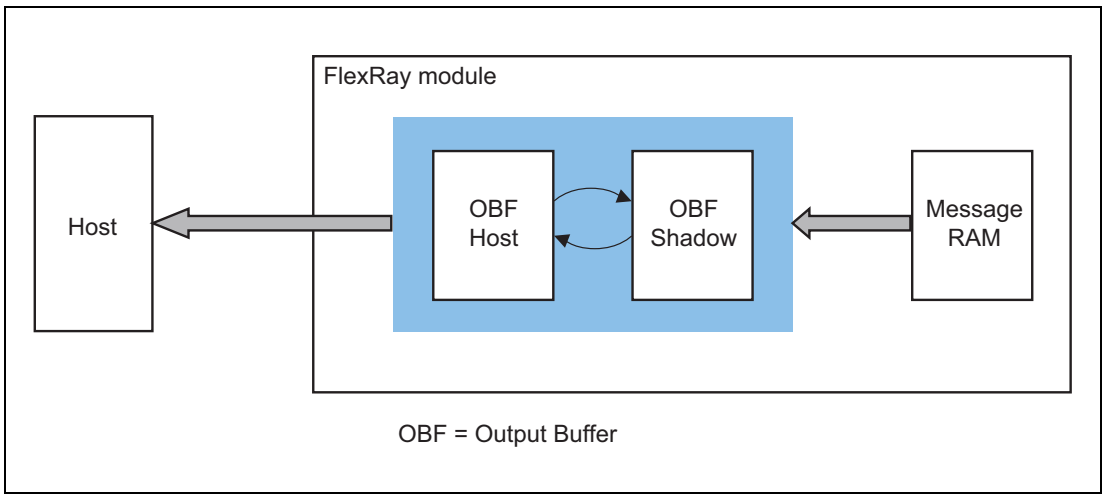

Figure 18.15 Double buffer structure Output Buffer

OBF Host and OBF Shadow as well as bits FLXAnFROBCM.RHSS, FLXAnFROBCM.RDSS, FLXAnFROBCM.RHSH, FLXAnFROBCM.RDSH and bits FLXAnFROBCR.OBRS[6:0], FLXAnFROBCR.OBRH[6:0] are swapped under control of bits FLXAnFROBCR.VIEW and FLXAnFROBCR.REQ.

Writing bit FLXAnFROBCR.REQ to 1 copies bits FLXAnFROBCM.RHSS, FLXAnFROBCM.RDSS and bits FLXAnFROBCR.OBRS[6:0] to an internal storage (see **Figure 18.16**).

After setting bit FLXAnFROBCR.REQ to 1, FLXAnFROBCR.OBSYS is set to 1, and the transfer of the message buffer selected by bits FLXAnFROBCR.OBRS[6:0] from the Message RAM to OBF Shadow is started. After the transfer between the Message RAM and OBF Shadow has completed, bit FLXAnFROBCR.OBSYS is set back to 0. Bits FLXAnFROBCR.REQ and FLXAnFROBCR.VIEW can only be set to 1 while bit FLXAnFROBCR.OBSYS is 0.

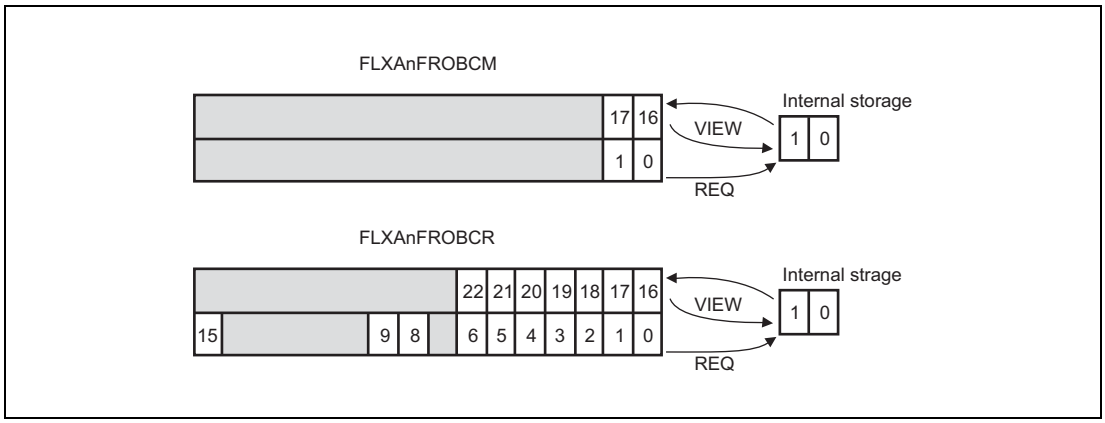

Figure 18.16 Swapping of FLXAnFROBCM and FLXAnFROBCR bits

OBF Host and OBF Shadow are switched by setting bit FLXAnFROBCR.VIEW to 1 while bit FLXAnFROBCR.OBSYS is 0 (see **Figure 18.15**).

In addition, bits FLXAnFROBCR.OBRH[6:0] and bits FLXAnFROBCM.RHSH and FLXAnFROBCM.RDSH are switched with the registers internal storage thus assuring that the message buffer number stored in bits FLXAnFROBCR.OBRH[6:0] and the mask configuration stored in FLXAnFROBCM.RHSH, FLXAnFROBCM.RDSH match the transferred data stored in OBF Host (see **Figure 18.16**).

Now the Host can read the transferred message buffer from OBF Host while the Message Handler may transfer the next message from the Message RAM to OBF Shadow.

If bits REQ and VIEW are set to 1 with the same write access while FLXAnFROBSYS is 0, FLXAnFROBSYS is automatically set to 1 and OBF Shadow and OBF Host are swapped. Additionally mask bits FLXAnFROBCM.RDSH and FLXAnFROBCM.RHSH are swapped with the registers internal storage to keep them attached to the respective Output Buffer transfer. Afterwards bits FLXAnFROBCR.OBRS[6:0] are copied to the register internal storage, mask bits FLXAnFROBCM.RDSS and FLXAnFROBCM.RHSS are copied to register FLXAnFROBCM internal storage, and the transfer of the selected message buffer from the Message RAM to OBF Shadow is started. While the transfer is ongoing the Host can read the message buffer transferred by the previous transfer from OBF Host. When the current transfer between Message RAM and OBF Shadow has completed, this is signaled by setting FLXAnFROBCR.OBSYS back to 0.

Example of an 8/16/32-bit Host access to a single message buffer:

If a single message buffer has to be read out, two separate write accesses to FLXAnFROBCR.REQ and FLXAnFROBCR.VIEW are necessary:

- Wait until FLXAnFROBCR.OBSYS is reset
- Write Output Buffer Command Mask FLXAnFROBCM.RHSS, FLXAnFROBCM.RDSS
- Request transfer of message buffer to OBF Shadow by writing FLXAnFROBCR.OBRS[6:0] and FLXAnFROBCR.REQ (in case of and 8-bit Host interface, FLXAnFROBCR.OBRS[6:0] have to be written before FLXAnFROBCR.REQ).
- Wait until FLXAnFROBCR.OBSYS is reset
- Toggle OBF Shadow and OBF Host by writing FLXAnFROBCR.VIEW = 1
- Read out transferred message buffer by reading FLXAnFRRDDSm, FLXAnFRRDHS1 to FLXAnFRRDHS3, and FLXAnFRMBS

Example of an 8/16/32-bit Host access sequence:

Request transfer of 1st message buffer to OBF Shadow

- Wait until FLXAnFROBCR.OBSYS is reset
- Write Output Buffer Command Mask FLXAnFROBCM.RHSS, FLXAnFROBCM.RDSS for 1st message buffer
- Request transfer of 1st message buffer to OBF Shadow by writing bits FLXAnFROBCR.OBRS[6:0] and FLXAnFROBCR.REQ (in case of accessing to the FLXAnFROBCR register in 8-bit units, bits FLXAnFROBCR.OBRS[6:0] have to be written before FLXAnFROBCR.REQ).

Toggle OBF Shadow and OBF Host to read out 1st transferred message buffer and request transfer of 2nd message buffer:

- Wait until FLXAnFROBCR.OBSYS is reset to 0
- Write Output Buffer Command Mask FLXAnFROBCM.RHSS, FLXAnFROBCM.RDSS for 2nd message buffer
- Toggle OBF Shadow and OBF Host and start transfer of 2nd message buffer to OBF Shadow simultaneously by writing FLXAnFROBCR.OBRS[6:0] of 2nd message buffer, bits FLXAnFROBCR.REQ, and FLXAnFROBCR.VIEW (in case of and 8-bit access to register FLXAnFROBCR, bits FLXAnFROBCR.OBRS[6:0] have to be written before bits FLXAnFROBCR.REQ and FLXAnFROBCR.VIEW).
- Read out 1st transferred message buffer by reading FLXAnFRRDDSm, FLXAnFRRDHS1 to FLXAnFRRDHS3, and FLXAnFRMBS

Demand access to last requested message buffer without request of another message buffer:

- Wait until FLXAnFROBCR.OBSYS is reset to 0
- Demand access to last transferred message buffer by writing FLXAnFROBCR.VIEW
- Read out last transferred message buffer by reading FLXAnFRRDDSm, FLXAnFRRDHS1 to FLXAnFRRDHS3, and FLXAnFRMBS

Table 18.105 Assignment of FLXAnFROBCM bits

Pos.	Access	Bit	Function
17	R	RDSH	Data Section available for Host access
16	R	RHSH	Header Section available for Host access
1	R/W	RDSS	Read Data Section Shadow
0	R/W	RHSS	Read Header Section Shadow

Table 18.106 Assignment of FLXAnFROBCR bits

Pos.	Access	Bit	Function
22 to16	R	OBRH[6:0]	OBF Request Host, number of message buffer available for Host access
15	R	OBSYS	OBF Busy Shadow, signals ongoing transfer from Message RAM to OBF Shadow
9	R/W	REQ	Request Transfer from Message RAM to OBF Shadow
8	R/W	VIEW	View OBF Shadow, swap OBF Shadow and OBF Host
6 to 0	R/W	OBRS[6:0]	OBF Request Shadow, number of message buffer for next request

18.3.12.3 FlexRay Protocol Controller Access to Message RAM

The two TBFs (A,B) are used to buffer the data for transfer between the two FlexRay Protocol Controllers and the Message RAM.

Each TBF is build up as a double buffer, able to store two complete FlexRay messages. There is always one buffer assigned to the corresponding Protocol Controller while the other one is accessible by the Message Handler.

If e.g. the Message Handler writes the next message to be sent to TBF Tx, the FlexRay Channel Protocol Controller can access TBF Rx to store the message it is actually receiving. During transmission of the message stored in TBFTx, the Message Handler transfers the last received message stored in TBF Rx to the Message RAM (if it passes acceptance filtering) and updates the respective message buffer.

Data transfers between the TBFs and the shift registers of the FlexRay Channel Protocol Controllers are done in words of 32 bit. This enables the use of a 32 bit shift register independent of the length of the FlexRay messages.

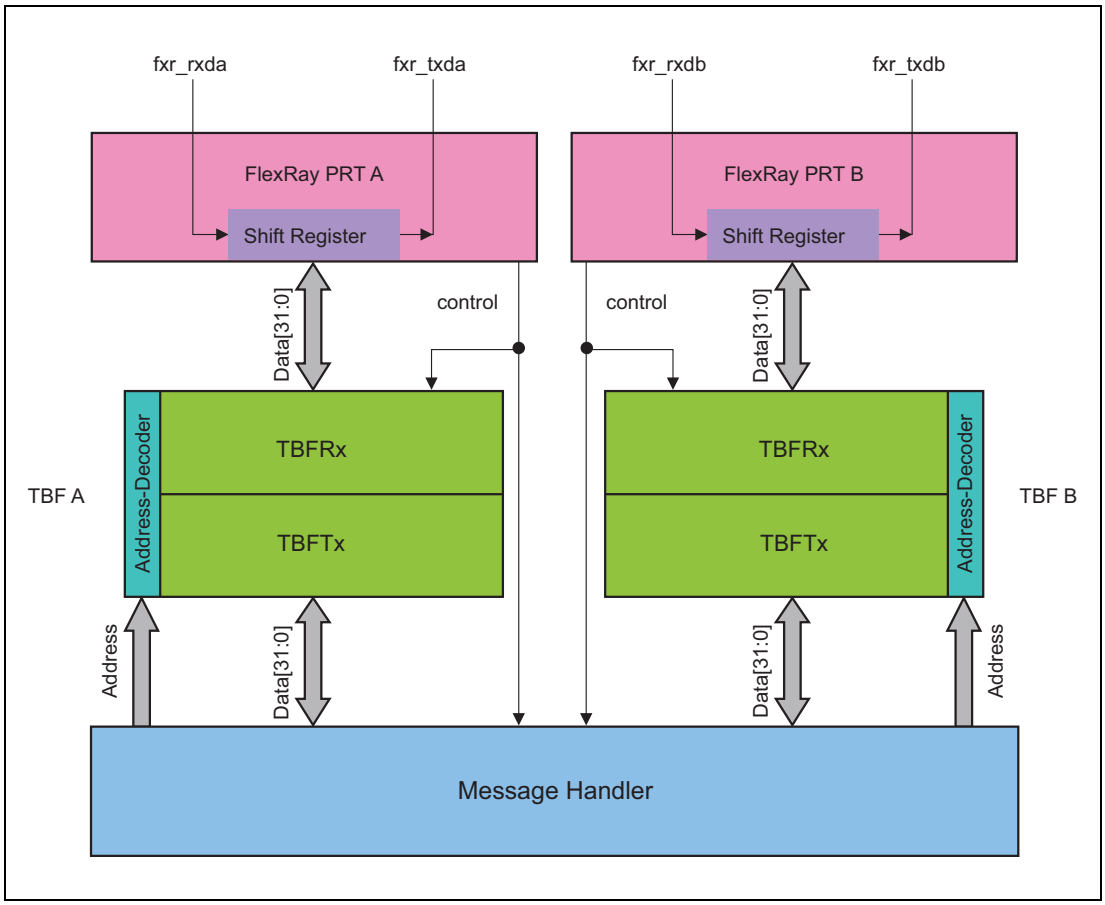

Figure 18.17 Access to TBFs

18.3.13 Message RAM

To avoid conflicts between Host access to the Message RAM and FlexRay message reception / transmission, the Host cannot directly access the message buffers in the Message RAM. These accesses are handled via the Input and Output Buffers. The Message RAM is able to store up to 128 message buffers depending on the configured payload length.

The Message RAM is able to store up to 2048 32-bit words. To achieve the required flexibility with respect to different numbers of data bytes per FlexRay frame (0 to 254), the Message RAM has a structure as shown in **Figure 18.18**.

When a message buffer of the data section to be allocated immediately after to the header partition is set as a reception buffer (bit FLXAnFRWRHS1.CFG to 0) or reception FIFO buffer, set a 32-bit unused area (minimum) at the beginning of the data section. In this case, the data partition is allowed to start at Message RAM word number:((bits FLXAnFRMRC.LCB[7:0] + 1) × 4) + 1 .

When a message buffer of the data section to be allocated immediately after to the header partition is set as a transmit buffer (bit FLXAnFRWRHS1.CFG to 1), the data partition is allowed to start at Message RAM word number: (bits FLXAnFRMRC.LCB[7:0] + 1) × 4.

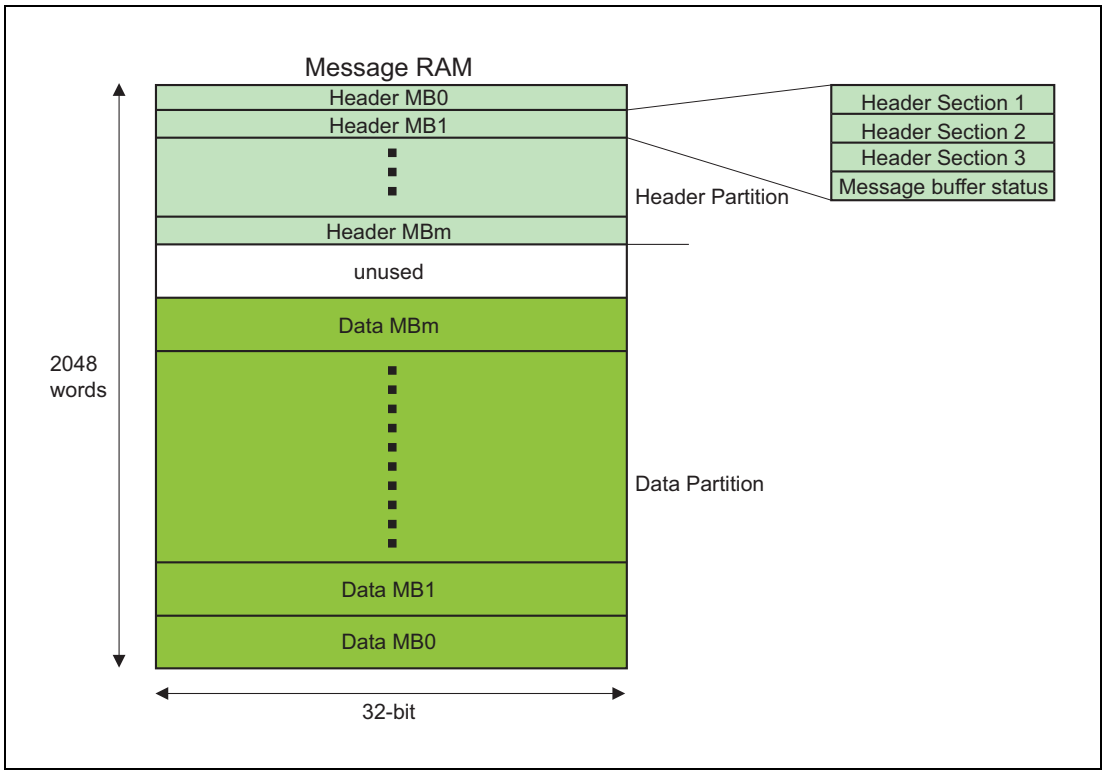

Figure 18.18 Configuration Example of Message Buffers in the Message RAM

Header Partition

Stores header sections of the configured message buffers:

- Supports a maximum of 128 message buffers
- Each message buffer has a header section of four 32 bit words
- Header 3 of each message buffer holds the 11-bit data pointer to the respective data section in the data partition

Data Partition

Flexible storage of data sections with different length. Some maximum values are:

- 30 message buffers with 254 byte data section each
- Or 56 message buffers with 128 byte data section each
- Or 128 message buffers with 48 byte data section each

CAUTION

header partition + data partition may not occupy more than 2048 32-bit words.

18.3.13.1 Header Partition

The elements used for configuration of a message buffer as well as the actual message buffer status are stored in the header partition of the Message RAM as listed in **Table 18.107** below. Configuration of the header sections of the message buffers is done via IBF (FLXAnFRWRHS1 to FLXAnFRWRHS3). Read access to the header sections is done via OBF (FLXAnFRRDHS1 to FLXAnFRRDHS3 + FLXAnFRMBS). The data pointer has to be calculated by the programmer to define the starting point of the data section for the respective message buffer in the data partition of the Message RAM. The data pointer should not be modified during runtime. For message buffers belonging to the receive FIFO (re)configuration is possible in DEFAULT_CONFIG or CONFIG state only.

The header section of each message buffer occupies four 32-bit words in the header partition of the Message RAM. The header of message buffer 0 starts with the first word in the Message RAM.

For transmit buffers the Header CRC has to be calculated by the Host.

Payload Length Received PLR, Receive Cycle Count RCC, Received on Channel Indicator RCI, Startup Frame Indicator SFI, Sync Frame Indicator SYN, Null Frame Indicator NFI, Payload Preamble Indicator PPI, and Reserved Bit RES are updated from received valid data frames only.

Table 18.107 Header Section of a Message Buffer in the Message RAM

Bit Word	31	30	29	28	27	26	25	24	23	22	21	20	19	18	17	16	15	14	13	12	11	10	9	8	7	6	5	4	3	2	1	0
0			MBI	TXM	PPIT	CFG	CH			Cycle Code												Frame ID										
1		Payload Length Received								Payload length Configured												Tx Buffer: Header CRC Configured Rx Buffer: Header CRC Received										
2			RES	PPI	NFI	SYN	SFI	RCI			Receive Cycle count											Data Pointer										
3			RESS	PPIS	NFIS	SYNS	SFIS	RCIS			Cycle Count Status						FTB	FTA		MLST	ESB	ESA	TCIB	TCIA	SVOB	SVOA	CEOB	CEOA	SEOB	SEOA	VFRB	VFRA
...	...																															
...	...																															

Frame Configuration
Filter Configuration
Message Buffer Contrd
Message RAM Configuration
Updated from received Data Frame
Message Buffer Status (MBS)
unused

(1) Header section 1 (word 0)

Write access via FLXAnFRWRHS1, read access via FLXAnFRRDHS1:

- Frame ID
  - Slot counter filtering configuration
- Cycle Code
  - Cycle counter filtering configuration
- CH
  - Channel filtering configuration
- CFG
  - Message buffer direction configuration: receive / transmit
- PPIT
  - Payload Preamble Indicator Transmit
- TXM
  - Transmit mode configuration: single-shot / continuous
- MBI
  - Message buffer receive / transmit interrupt enable

(2) Header section 2 (word 1)

Write access via FLXAnFRWRHS2, read access via FLXAnFRRDHS2:

- Header CRC
  - Transmit Buffer: Configured by the Host (calculated from frame header)
  - Receive Buffer: Updated from received frame
- Payload Length Configured
  - Length of data section (2-byte words) as configured by the Host
- Payload Length Received
  - Length of payload segment (2-byte words) stored from received frame

(3) Header section 3 (word 2)

Write access via FLXAnFRWRHS3, read access via FLXAnFRRDHS3:

- Data Pointer
  - Pointer to the beginning of the corresponding data section in the data partition

Read access via FLXAnFRRDHS3, valid for receive buffers only, updated from received frames:

- Receive Cycle Count
  - Cycle count from received frame
- RCI
  - Received on Channel Indicator

- SFI
  - Startup Frame Indicator
- SYN
  - Sync Frame Indicator
- NFI
  - Null Frame Indicator
- PPI
  - Payload Preamble Indicator
- RES
  - Reserved bit

(4) Message Buffer Status FLXAnFRMBS (word 3)

Read access via FLXAnFRMBS, updated by the CC at the end of the configured slot.

- VFRA
  - Valid Frame Received on channel A
- VFRB
  - Valid Frame Received on channel B
- SEOA
  - Syntax Error Observed on channel A
- SEOB
  - Syntax Error Observed on channel B
- CEOA
  - Content Error Observed on channel A
- CEOB
  - Content Error Observed on channel B
- SVOA
  - Slot boundary Violation Observed on channel A
- SVOB
  - Slot boundary Violation Observed on channel B
- TCIA
  - Transmission Conflict Indication channel A
- TCIB
  - Transmission Conflict Indication channel B
- ESA
  - Empty Slot Channel A

- ESB
  - Empty Slot Channel B
- MLST
  - Message LoST
- FTA
  - Frame Transmitted on Channel A
- FTB
  - Frame Transmitted on Channel B
- Cycle Count Status
  - Actual cycle count when status was updated
- RCIS
  - Received on Channel Indicator Status
- SFIS
  - Startup Frame Indicator Status
- SYNS
  - Sync Frame Indicator Status
- NFIS
  - Null Frame Indicator Status
- PPIS
  - Payload Preamble Indicator Status
- RESS
  - Reserved bit Status

18.3.13.2 Data Partition

The data partition of the Message RAM stores the data sections of the message buffers configured for reception / transmission as defined in the header partition. The number of data bytes for each message buffer can vary from 0 to 254. To optimize the data transfer between the shift registers of the two FlexRay Protocol Controllers and the Message RAM as well as between the Host interface and the Message RAM, the physical width of the Message RAM is set to 4 bytes.

The data partition starts after the last word of the header partition. When configuring the message buffers in the Message RAM the programmer has to assure that the data pointers point to addresses within the data partition. **Table 18.108** below shows an example how the data sections of the configured message buffers can be stored in the data partition of the Message RAM.

The beginning and the end of a message buffer's data section is determined by the data pointer and the payload length configured in the message buffer's header section, respectively. This enables a flexible usage of the available RAM space for storage of message buffers with different data length.

If the size of the data section is an odd number of 2-byte words, the remaining 16 bits in the last 32bit word are unused (see **Table 18.108** below).

Table 18.108 Example for Structure of the Data Partition in the Message RAM

Bit Word	31 30 29 28 27 26 25 24	23 22 21 20 19 18 17 16	15 14 13 12 11 10 9 8	7 6 5 4 3 2 1 0
...	unused	unused	unused	unused
...	unused	unused	unused	unused
...	MBn Data3	MBn Data2	MBn Data1	MBn Data0
...	...	...	...	...
...	...	...	...	...
...	MBn Data(m)	MBn Data(m-1)	MBn Data(m-2)	MBn Data(m-3)
...	...	...	...	...
...	...	...	...	...
...	...	...	...	...
...	MB1 Data3	MB1 Data2	MB1 Data1	MB1 Data0
...	...	...	...	...
2046	MB0 Data3	MB0 Data2	MB0 Data1	MB0 Data0
2047	unused	unused	MB0 Data5	MB0 Data4

18.3.13.3 Message Data Integrity Check

There is a data integrity checking mechanism implemented in the FlexRay core to assure the integrity of the data stored in the related RAM. Each RAM has a checksum generator / checker attached as shown in **Figure 18.19**.

When data is written to a RAM, the local checksum generator generates the checksum. The checksum is stored together with the respective data word. The checksum is checked each time a data word is read from a RAM.

If a checksum error is detected, the respective access error flag is set. The access error flags (bits AMR, ATBF1, and ATBF2) and the faulty message buffer indicators (bits FMBD, MFMB, and FMB) are located in the FlexRay Message Handler Status register (FLXAnFRMHDS). These single access error flags control the error interrupt flag (bit FLXAnFREIR.AERR).

Figure 18.19 shows the data paths between the Input Buffer, TBF and Message RAM.

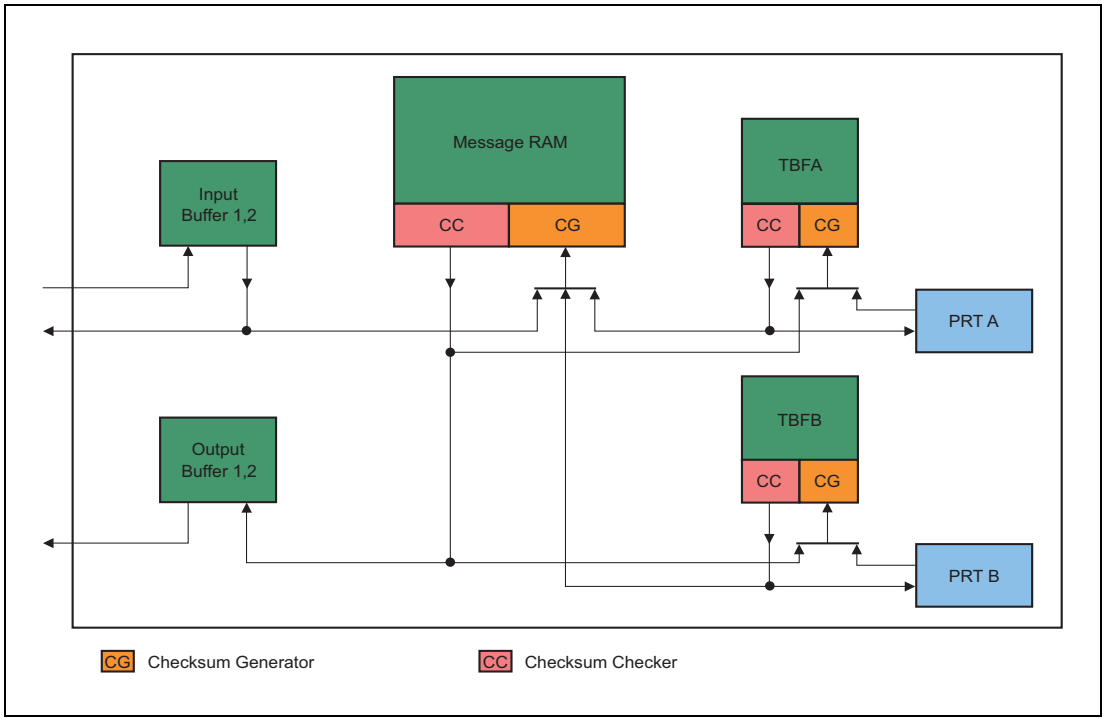

Figure 18.19 Checksum Generation and Check

When an access error has been detected the following actions will be performed:

In all cases:

- The respective access error flag in FLXAnFRMHDS register is set
- The access error flag FLXAnFREIR.AERR is set and, if enabled, a module interrupt to the Host will be generated.

Additionally in specific cases:

(1) Access error during data transfer from Input Buffer 1, 2 to Message RAM when reading header section of respective message buffer from Message RAM:

- FLXAnFRMHDS.AMR is set.
- FLXAnFRMHDS.FMBD bit is set to indicate that bits FLXAnFRMHDS.FMB[6:0] point to a faulty message buffer.
- Bits FLXAnFRMHDS.FMB[6:0] indicate the number of the faulty message buffer.
- The data section of the respective message buffer is not updated.
- Transmit buffer: Transmission request for the respective message buffer is not set.

(2) Access error during scan of header sections in Message RAM:

- FLXAnFRMHDS.AMR is set.
- Bit FLXAnFRMHDS.FMBD is set to indicate that bits FLXAnFRMHDS.FMB[6:0] point to a faulty message buffer.
- Bits FLXAnFRMHDS.FMB[6:0] indicate the number of the faulty message buffer.
- Ignore message buffer (message buffer is skipped).

(3) Access error during data transfer from Message RAM to TBFA and TBFB:

- FLXAnFRMHDS.AMR is set.
- Bit FLXAnFRMHDS.FMBD is set to indicate that bits FLXAnFRMHDS.FMB[6:0] point to a faulty message buffer.
- Bits FLXAnFRMHDS.FMB[6:0] indicate the number of the faulty message buffer.
- Frame not transmitted, frames already in transmission are invalidated by setting the frame CRC to zero.

(4) Access error during data transfer from TBFA and TBFB to Message RAM when reading header section of respective message buffer from Message RAM:

- FLXAnFRMHDS.AMR is set.
- FLXAnFRMHDS.FMBD bit is set to indicate that bits FLXAnFRMHDS.FMB[6:0] point to a faulty message buffer.
- Bits FLXAnFRMHDS.FMB[6:0] indicate the number of the faulty message buffer.
- The data section of the respective message buffer is not updated.

(5) Access error during data transfer from Message RAM to Output Buffer:

- The FLXAnFRMHDS.AMR bit is set to 1.
- FLXAnFRMHDS.FMBD bit is set to indicate that bits FLXAnFRMHDS.FMB[6:0] point to a faulty message buffer.
- Bits FLXAnFRMHDS.FMB[6:0] indicate the number of the faulty message buffer.

(6) Access error during a data transfer from TBFA and TBFB to Protocol Controller 1, 2:

- FLXAnFRMHDS.ATBF1, 2 bit is set.
- Frames already in transmission are invalidated by setting the frame CRC to zero.

(7) Access error during data transfer from TBFA and TBFB to Message RAM when reading TBFA and TBFB:

- FLXAnFRMHDS.ATBF1, 2 bit is set.
- FLXAnFRMHDS.FMBD bit is set to indicate that bits FLXAnFRMHDS.FMB[6:0] point to a faulty message buffer.
- Bits FLXAnFRMHDS.FMB[6:0] indicate the number of the faulty message buffer.

(8) Access error during data read of TBFA and TBFB:

When an access error occurs while the Message Handler read a frame with network management information (PPI = 1) from the TBFA and TBFB, the corresponding network management vector registers FLXAnFRNMV1 to 3 are not updated from this frame.

18.3.13.4 Host Handling of Access Errors

Access error caused by bit flips can be fixed by:

(1) Self-healing

Access errors located in the Data Section of Message RAM, TBFA or TBFB are overwritten with the next write access to the disturbed bit(s) caused by Host access or by FlexRay communication.

(2) CLEAR_RAMS Command

The POC command CLEAR_RAMS initializes the message RAM to zero, when called in the DEFAULT_CONFIG or CONFIG state.

(3) Temporary Unlocking of Header Section

An access error in the header section of a locked message buffer can be fixed by a transfer from the Input Buffer to the locked buffer Header Section. For this transfer, the write access to the FLXAnFRIBCR register (specifying the message buffer number) must be immediately preceded by the unlock sequence normally used to leave CONFIG state (see **Section 18.2.3.1, FLXAnFRLCK — FlexRay Lock Register**).

For that single transfer the respective message buffer header is unlocked, regardless whether it belongs to the FIFO or whether its locking is controlled by FLXAnFRMRC.SEC, and will be updated with new data.

18.3.14 Module Interrupt

In general, interrupts provide a close link to the protocol timing as they are triggered almost immediately when an error or status change is detected by the CC, a frame is received or transmitted, a configured timer interrupt is activated, or a stop watch event occurred. This enables the Host to react very quickly on specific error conditions, status changes, or timer events. On the other hand too many interrupts can cause the Host to miss deadlines required for the application. Therefore the CC supports enable / disable controls for each individual interrupt source separately.

An interrupt may be triggered when

- An error was detected
- A status flag is set to 1
- A timer reaches a preconfigured value
- A message transfer from Input Buffer to Message RAM or from Message RAM to Output Buffer has completed
- A message transfer from the local RAM to Message RAM or from Message RAM to local RAM has completed
- A stop watch event occurred

Tracking status and generating interrupts when a status change or an error occurs are two independent tasks. Regardless of whether an interrupt is enabled or not, the corresponding status is tracked and indicated by the CC. The Host has access to the actual status and error information by reading registers FLXAnFREIR, FLXAnFRSIR, FLXAnFROS, FLXAnFROTS and FLXAnFRITS.

The general purpose interrupt lines to the Host, FlexRay Interrupt 0, and FlexRay Interrupt 1 are controlled by the interrupts enabled by the FLXAnFREIES and FLXAnFRSIES registers. In addition each of the two interrupt lines can be enabled / disabled separately by programming bit FLXAnFRILE.EINT0 and FLXAnFRILE.EINT1.

The input data transfer interrupt lines to the Host, FlexRay input queue empty interrupt, FlexRay input queue full interrupt, are controlled by the enabled interrupts in FLXAnFRITS. In addition, each of the input data transfer interrupts can be enabled or disabled separately by setting the related bits in FLXAnFRITC.

The output data transfer interrupt lines to the Host, FlexRay FIFO transfer warning interrupt, FlexRay output transfer warning interrupt, FlexRay FIFO transfer interrupt, FlexRay output transfer interrupt, are controlled by the enabled interrupts in FLXAnFROTS. In addition each of the output data transfer interrupts can be enabled or disabled separately by setting the related bits in FLXAnFROTC.

The three timer interrupts lines to the Host are controlled by the enabled interrupts in FLXAnFROS. In addition each of the interrupt lines can be enabled or disabled separately by setting bit FLXAnFROC.T0IE, FLXAnFROC.T1IE and FLXAnFROC.T2IE.

When a transfer between IBF/OBF and the Message RAM has completed bit FLXAnFRSIR.TIBC or FLXAnFRSIR.TOBC is set to 1.

An stop watch event is generated by the stpwt_extfxr pin input.

18.3.15 Assignment of FlexRay Configuration Parameters

Table 18.109 FlexRay configuration parameters (1/2)

Parameter	Bit (field)
pKeySlotusedForStartup	FLXAnFRSUCC1.TXST
pKeySlotUsedForSync	FLXAnFRSUCC1.TXSY
gColdStartAttempts	FLXAnFRSUCC1.CSA[4:0]
pAllowPassiveToActive	FLXAnFRSUCC1.PTA[4:0]
pWakeupChannel	FLXAnFRSUCC1.WUCS
pSingleSlotEnabled	FLXAnFRSUCC1.TSM
pAllowHaltDueToClock	FLXAnFRSUCC1.HCSE
pChannels	FLXAnFRSUCC1.CCHA, CCHB
pdListenTimeOut	FLXAnFRSUCC2.LT[20:0]
gListenNoise	FLXAnFRSUCC2.LTN[3:0]
gMaxWithoutClockCorrectionPassive	FLXAnFRSUCC3.WCP[3:0]
gMaxWithoutClockCorrectionFatal	FLXAnFRSUCC3.WCF[3:0]
gNetworkManagementVectorLength	FLXAnFRNEMC.NML[3:0]
gdTSSTransmitter	FLXAnFRPRTC1.TSST[3:0]
gdCASRxLowMax	FLXAnFRPRTC1.CASM[6:0]
gdSampleClockPeriod	FLXAnFRPRTC1.BRP[1:0]
pSamplesPerMicrotick	FLXAnFRPRTC1.BRP[1:0]
gdWakeupSymbolRxWindow	FLXAnFRPRTC1.RXW[8:0]
pWakeupPattern	FLXAnFRPRTC1.RWP[5:0]
gdWakeupSymbolRxIdle	FLXAnFRPRTC2.RXI[5:0]
gdWakeupSymbolRxLow	FLXAnFRPRTC2.RXL[5:0]
gdWakeupSymbolTxIdle	FLXAnFRPRTC2.TXI[5:0]
gdWakeupSymbolTxLow	FLXAnFRPRTC2.TXL[5:0]
gPayloadLengthStatic	FLXAnFRMHDC.SFDL[6:0]
pLatestTx	FLXAnFRMHDC.SLT[12:0]
pMicroPerCycle	FLXAnFRGTUC1.UT[19:0]
gMacroPerCycle	FLXAnFRGTUC2.MPC[13:0]
gSyncNodeMax	FLXAnFRGTUC2.SNM[3:0]
pMicroInitialOffset[A]	FLXAnFRGTUC3.UIOA[7:0]
pMicroInitialOffset[B]	FLXAnFRGTUC3.UIOB[7:0]
pMacroInitialOffset[A]	FLXAnFRGTUC3.MIOA[6:0]
pMacroInitialOffset[B]	FLXAnFRGTUC3.MIOB[6:0]
gdNIT	FLXAnFRGTUC4.NIT[13:0]
gOffsetCorrectionStart	FLXAnFRGTUC4.OCS[13:0]
pDelayCompensation[A]	FLXAnFRGTUC5.DCA[7:0]
pDelayCompensation[B]	FLXAnFRGTUC5.DCB[7:0]
pClusterDriftDamping	FLXAnFRGTUC5.CDD[4:0]
pDecodingCorrection	FLXAnFRGTUC5.DEC[7:0]
pdAcceptedStartupRange	FLXAnFRGTUC6.ASR[10:0]
pdMaxDrift	FLXAnFRGTUC6.MOD[10:0]
gdStaticSlot	FLXAnFRGTUC7.SSL[9:0]
gNumberOfStaticSlots	FLXAnFRGTUC7.NSS[9:0]

Table 18.109 FlexRay configuration parameters (2/2)

Parameter	Bit (field)
gdMinislot	FLXAnFRGTUC8.MSL[5:0]
gNumberOfMinislots	FLXAnFRGTUC8.NMS[12:0]
gdActionPointOffset	FLXAnFRGTUC9.APO[5:0]
gdMinislotActionPointOffset	FLXAnFRGTUC9.MAPO[4:0]
gdDynamicSlotIdlePhase	FLXAnFRGTUC9.DSI[1:0]
pOffsetCorrectionOut	FLXAnFRGTUC10.MOC[13:0]
pRateCorrectionOut	FLXAnFRGTUC10.MRC[10:0]
pExternOffsetCorrection	FLXAnFRGTUC11.EOC[2:0]
pExternRateCorrection	FLXAnFRGTUC11.ERC[2:0]

18.3.16 Usage of Data Transfer

The data transfer function is for the transfer of FlexRay messages between the FlexRay module's internal message RAM and areas of user RAM such as local RAM.

Data transfer from an area of user RAM to the internal message RAM (input) is started by software. Input transfer is used to set up a message buffer or to update data for transmission.

Data transfer from the internal message RAM to an area of user RAM (output) starts in response to the following events.

- Data are stored in the reception message buffer or the internal FIFO buffer of the FlexRay module.
- The state of a slot changes.
- The user issues a transfer request.

An area of the user RAM needs to be secured for the data to be transferred. The data are transferred in a defined structure.

Access to the input and output buffers by the CPU is prohibited while this function is in use.

18.3.16.1 Input Data Transfer

When the automatic input data transfer function is enabled, committed input data structures are transferred from the local RAM to the FlexRay internal message RAM with minimum CPU support.

(1) Activation and deactivation

The input data transfer function should be activated before usage. The activation of the input transfer handler initializes the input queue put index (FLXAnFRITS.IPIDX[6:0]) and get index (FLXAnFRITS.IGIDX[6:0]) to zero. Also the interrupt status bits in the FLXAnFRITS register (IQEIS and IQFIS) are set to 0.

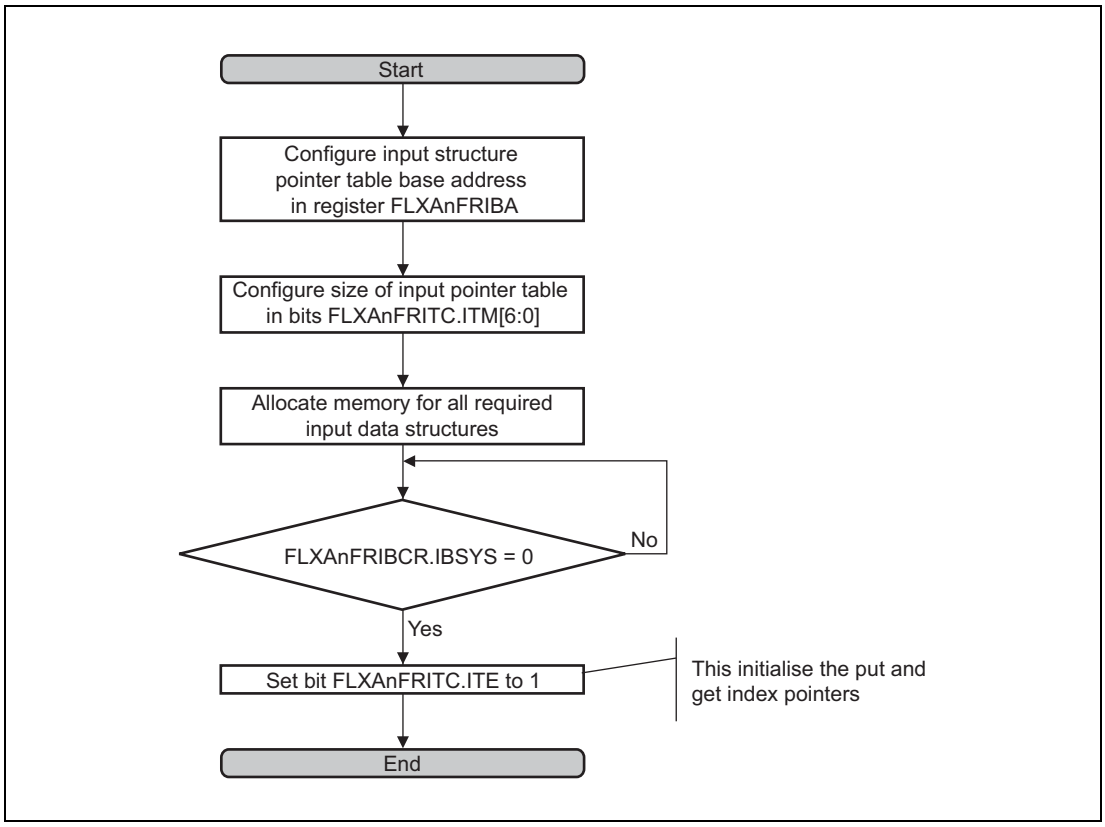

Figure 18.20 Input Transfer Enable Processing Flow

A deactivation request of the input transfer function can be made at any time. The input queue put index and the input queue status are maintained independently from the input transfer function state.

Before the transfer function gets disabled (bit FLXAnFRITS.ITS = 0), user requested input transfers and all committed input transfers will be completed.

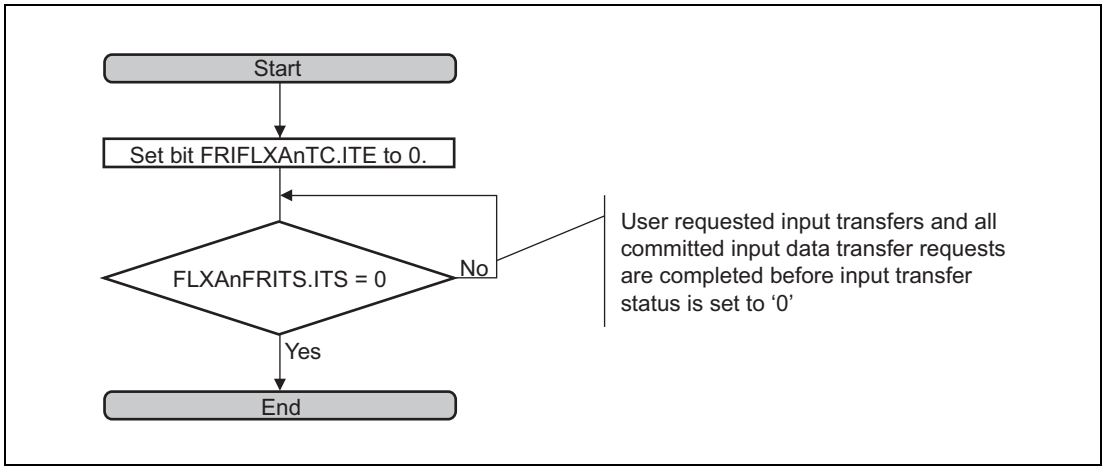

Figure 18.21 Input Transfer Disable Processing Flow

(2) Input data structure

The application has to reserve a location in the local RAM to provide the content for message buffer configuration (input data structure).

The location of this input data structure needs to be defined by an input data structure pointer also located in the local RAM.

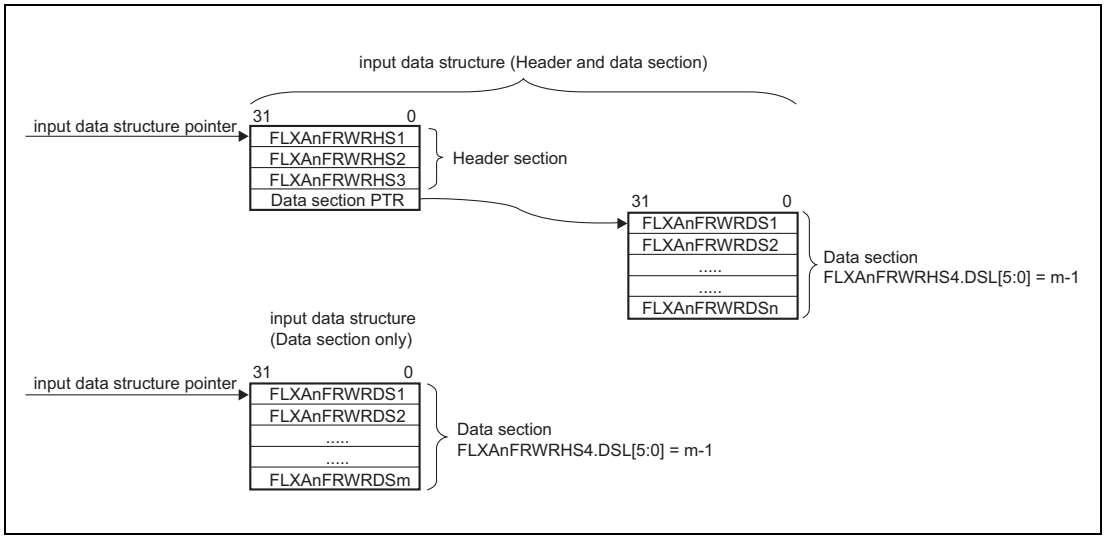

Figure 18.22 Input data structure

In general the input data structure consists of two sections, the header and the data section.

The header section consists of FLXAnFRWRHS1, FLXAnFRWRHS2, FLXAnFRWRHS3 and the data section pointer.

For bit alignment and bit function in the header section, see **Section 18.3.13.1, Header Partition**.

Depending on the settings in the control field (FLXAnFRWRHS4) located in the input pointer table, the data structure pointer is a reference to the address of FLXAnFRWRHS1 or FLXAnFRWRDS1. The data structure pointer has to be aligned to a 32 bit address.

If bit FLXAnFRWRHS4.LHS is set to 1, it is required to provide a valid header section. In this case FLXAnFRWRDS1 is the first element of the data structure.

If bit FLXAnFRWRHS4.LHS is set to 0, a header section is not required. In this case FLXAnFRWRDS1 is the first element of the data structure.

If bit FLXAnFRWRHS4.LDS is set to 1, it is required to provide a valid data section. The pointer to the data section is a reference to the address of the first payload long word (FLXAnFRWRDS1) and has to be aligned to a 32 bit address.

If bit FLXAnFRWRHS4.LDS is set to 0, a data section is not required. The data section pointer is not evaluated by the input handler.

The length of the data section and the size to be allocated in the local RAM depends on the configuration of bits FLXAnFRWRHS4.DSL[5:0].

For the transfer into the FlexRay core internal message RAM the number of 16 bit words configured by bits FLXAnFRWRHS2.PLC[6:0] is used. The application has to ensure, that a proper number of data words is provided in the local RAM. In case the buffer is configured by bits FLXAnFRWRHS2.PLC[6:0] to hold an odd payload length, the application has to write zero to the last 16 bit of the payload section to ensure that the padding data is all zero.

(3) Input pointer table

To transfer data from the input data structures located in the local RAM to the FlexRay internal message RAM the related input data structure pointer and control field needs to be added to the input pointer table which is located in the local RAM.

The location of the first element of this table is identified by the input pointer table base address (FLXAnFRIBA.ITA[31:0]). This base address has to be aligned to a 32 bit address.

The maximum number of input requests that can be queued is defined by the Input queue Table Max register (FLXAnFRITC.ITM[6:0]).

Each Input pointer table entry requires two long words. The required address range of the input pointer table for the queued transfer requests can be calculated by

Input pointer table size (byte) = (((FLXAnFRTTC.ITM[6:0] + 1) × 2) × 4)

Equation 1

The input pointer entry for the user requested input transfer should be added after the end of the input pointer table.

The pointer table index related to this entry and hence the number to be written to FLXAnFRUIR.UIDX[7:0], is FLXAnFRITC.ITM[6:0] + 1. The address in the input pointer table related to the user requested input transfer (user input address) can be calculated by

User input address = FLXAnFRIBA.ITA[31:0] + Input pointer table size

Equation 2

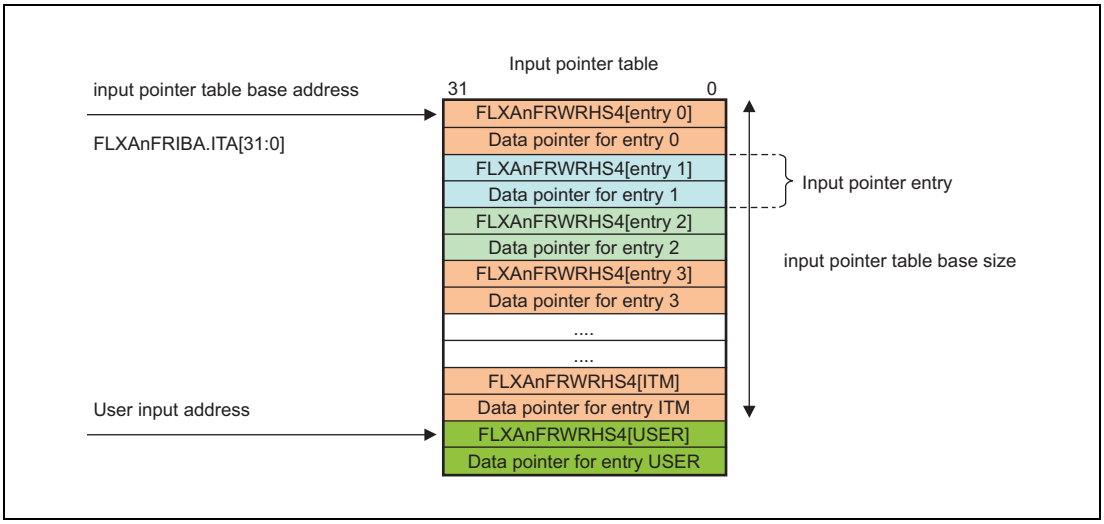

Figure 18.23 Input pointer table

The input pointer table holds the control field FLXAnFRWRHS4 and the pointers to the local RAM location where the message buffer content (header section and/or data section) is stored.

The application has to write FLXAnFRWRHS4 and the input data structure pointer at the addresses in the input pointer table related to the put index position before a transfer request is initiated.

FLXAnFRWRHS4:

Bit	31	30	29	28	27	26	25	24	23	22	21	20	19	18	17	16
	—	—	—	—	—	—	—	—	—	—	DSL[5:0]					
Value after reset	—	—	—	—	—	—	—	—	—	—	—	—	—	—	—	—
R/W	—	—	—	—	—	—	—	—	—	—	—	—	—	—	—	—

Bit	15	14	13	12	11	10	9	8	7	6	5	4	3	2	1	0
	—	—	—	—	INV	STR	LDS	LHS	—	IMBNR[6:0]						
Value after reset	—	—	—	—	—	—	—	—	—	—	—	—	—	—	—	—
R/W	—	—	—	—	—	—	—	—	—	—	—	—	—	—	—	—

Table 18.110 FLXAnFRWRHS4 Register Contents

Bit Position	Bit Name	Function
31 to 22	Reserved	When read, an undefined value is read. When writing, always write 0.
21 to 16	DSL[5:0]	Data Section Length Bit Specifies the length of the data section in terms of 32 bit values.
15 to 12	Reserved	When read, an undefined value is read. When writing, always write 0.
11	INV	Invalidate entry Bit 0: The data structure is valid and will be transferred to the FlexRay internal message RAM. 1: The data structure is invalid. FlexRay internal message RAM is not updated using this input pointer entry.
10	STR	Set transmission request Bit 0: The bit FLXAnFRTXRQm.TXRp for the message buffer selected by the bits IMBNR[6:0] is set to 0. No data from this message buffer is transmitted. 1: The bit FLXAnFRTXRQm.TXRp for the message buffer selected by the bits IMBNR[6:0] is set to 1 to release the message buffer for transmission The application should not set the bit STR to 1 for receive buffers.
9	LDS	Load data section Bit 0: No update of data section. 1: Data section for the message buffer selected by the bits IMBNR[6:0] is updated.
8	LHS	Load header section Bit 0: No update of header section. 1: Header section for the message buffer selected by the bits IMBNR[6:0] is updated.
7	Reserved	When read, an undefined value is read. When writing, always write 0.
6 to 0	IMBNR[6:0]	Message buffer number to be updated Bit Selects the target message buffer number in the FlexRay internal message RAM for transfer

Note that the LHS bit should not be set for protected message buffers.

The bit LDS defines if the data section of the message buffer selected by the bits IMBNR[6:0] should be updated.

If LDS is set to 1 (DSL[5:0] + 1) 32 bit words of payload data are transferred from the local RAM to the message buffer selected by the bits IMBNR[6:0].

If LDS is set to 0 no payload data is transferred from the local RAM.

Note that the payload transferred is independent from the configured payload length (bits FLXAnFRWRHS2.PLC[6:0]).

The bit INV can be used to invalidate a committed data structure. This bit should be only used to cancel the transfer of committed data structures when the input queue is halted (see **Section 18.3.16.1 (5), Transfer function of dedicated message buffers**).

When this bit is set to 1 the message buffer number (IMBNR[6:0]) is not updated. When the bit is set to 0 the message buffer number (IMBNR[6:0]) is updated.

(4) Transfer function of input data structure

To use the input data structure transfer function the input transfer has to be activated (see **Section 18.3.16.1 (1), Activation and deactivation**). The activation process requires the setup of the input pointer table (see **Section 18.3.16.1 (3), Input pointer table**) in order to specify the source location (input data structures) for the data structures to be transferred. When the input transfer gets enabled the get index pointer is initialized to zero.

All FlexRay internal message buffers can be updated using the input transfer queue which is built in the input pointer table. The application has to write the pointer and control field (table entry) to the data structure to be transferred into the input pointer table. For that purpose the application has to maintain a put index for the input pointer table that indicates where the pointer has to be written to.

To commit this table entry to the input handler, the application has to write the target message buffer number to the input queue control register (bits FLXAnFRIQC.IMBNR[6:0]). Afterwards the application has to increment the application internal put index.

By writing to the input queue control register the data available bits (FLXAnFRDAm.DA[31:0]) are automatically set to 1. The input transfer handler also maintains the put index pointer in the status register (FLXAnFRITS.IPIDX[6:0]).

In case the input queue gets full (number of queued input transfer requests is equal to the input queue table size) FLXAnFRITS.IQFP and FLXAnFRITS.IQFIS are set to 1. The input queue full condition pending flag (FLXAnFRITS.IQFP) changes from 1 to 0 when there are entries in the input queue available, whereby the input queue full interrupt status flag (FLXAnFRITS.IQFIS) needs to be cleared by the application.

The application should not make any further write access to bits FLXAnFRIQC.IMBNR[6:0] as long as bit FLXAnFRITS.IQFP is 1.

In case the input queue gets empty (number of queued input transfer requests changes to zero) FLXAnFRITS.IQEIS is set to 1. The input queue empty interrupt status flag (FLXAnFRITS.IQEIS) needs to be cleared by the application.

The transfer of the input data structures to the FlexRay message RAM is controlled by a get index pointer which is handled inside the FlexRay module and flagged in bits FLXAnFRITS.IGIDX[6:0]. Note that the index is referring to the input entry and not the address offset in the input pointer table.

If the input queue is not empty, the transfer handler reads out the input pointer table entry of the transfer queue and starts the transfer of the input data structure from the address the input pointer is referring to. When all required data words are transferred to the FlexRay module, the data available flag for the transferred message buffer number is set to 0 and the get index in the transfer handler is incremented by one.

In case of an invalidated data structure (see **Section 18.3.16.1 (5), Halting the input queue**) no FlexRay internal message buffer is updated and the related data available flag is automatically set to 0. The change of the data available flag can be used to confirm the cancellation a transmit request.

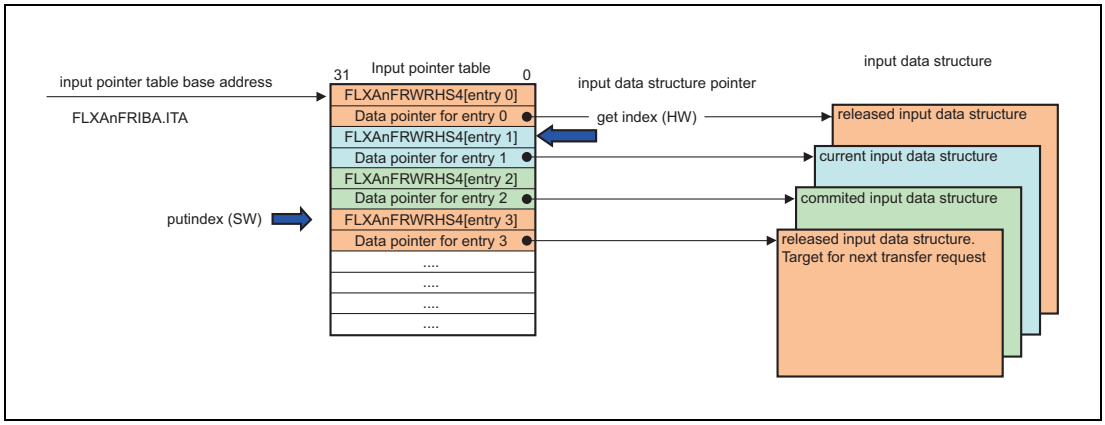

Figure 18.24 Input Pointer Table

Receive message buffers can be also configured using the input data transfer by setting up the required header sections and mark only the header section (FLXAnFRWRHS4.LDS = 0, FLXAnFRWRHS4.LHS = 1) to be updated in the FlexRay module.

(5) Halting the input queue

Committed data structures cannot be removed, but can be invalidated or updated when the input queue is halted.

To cancel data structures already committed to the input queue, the queue can be halted by writing a 1 to FLXAnFRITC.IQHR.

After the ongoing input transfer has been completed the queue is halted and FLXAnFRITS.IQH changes from 0 to 1.

To invalidate an entry of the input queue FLXAnFRWRHS4.INV has to be set to 1. All other bits in FWRHS4 should be unchanged.

The following processing flow shall be used to analyse whether a committed message has been already transferred to the FlexRay internal message RAM or not.

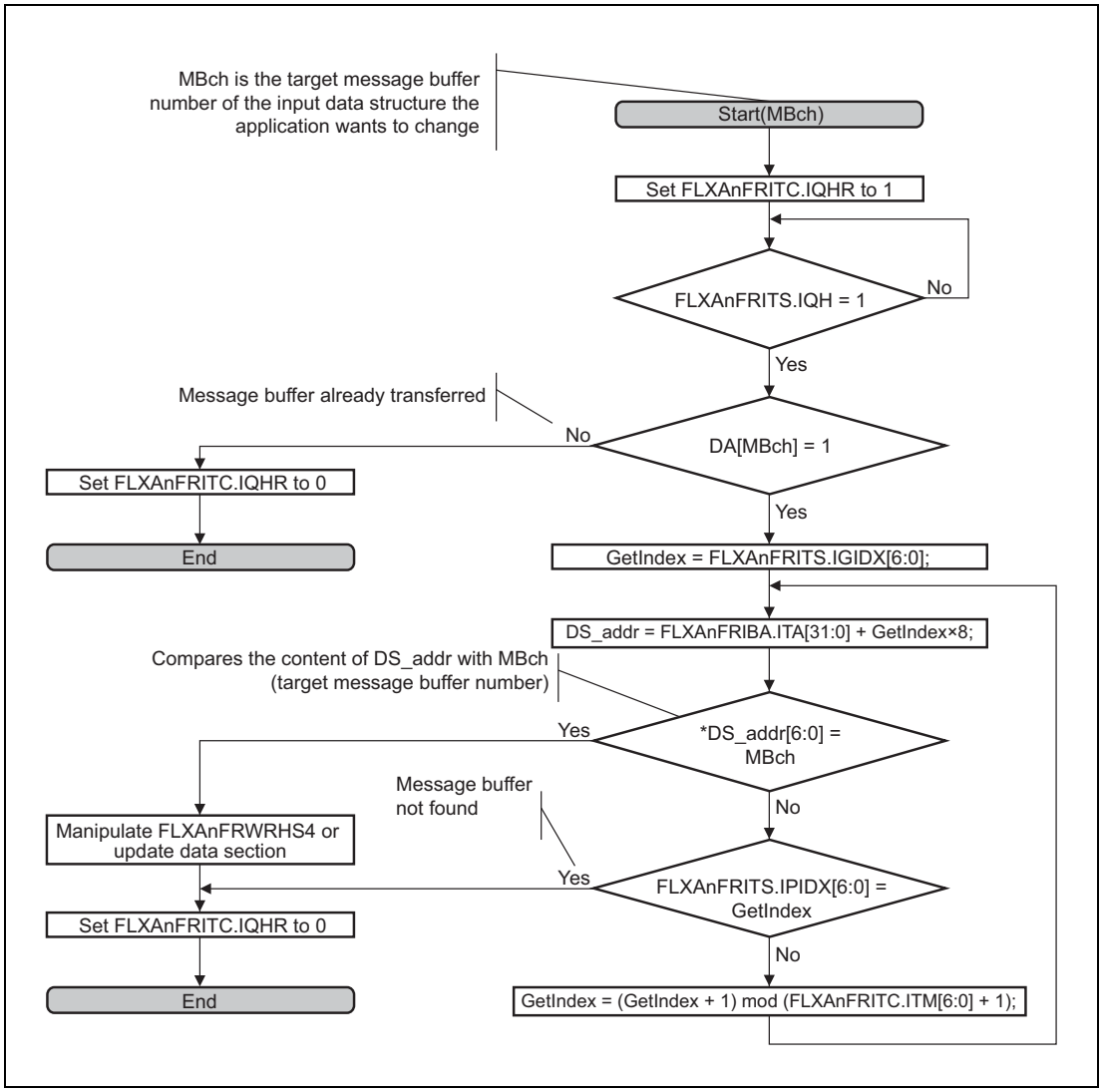

Figure 18.25 Input Table Analysis

In case the message buffer was already transferred to the FlexRay internal message RAM, the user input transfer request can be used to bypass the actual queue and update the required message buffer (see **Section 18.3.16.1 (6), Transfer function of user requested input transfers**).

(6) Transfer function of user requested input transfers

To use this function the input transfer has to be activated (see **Section 18.3.16.1 (1), Activation and deactivation**).

The application is capable, by using FLXAnFRUIR.UIDX[7:0], to request a transfer of an input data structure. The user input transfer request is serviced first.

The application has to write the pointer and control field (table entry) to the data structure to be transferred into the input pointer table. The table entry for the user input transfer request should be added after the end of the input pointer table (see **Section 18.3.16.1 (3), Input pointer table**).

To commit this table entry to the input handler, the application has to write the index (FLXAnFRITC.ITM[6:0] +1) to the user input transfer request register (FLXAnFRUIR.UIDX[7:0]).

By writing to the user input transfer request register, the user input transfer request pending flag (FLXAnFRITS.UIRP) is automatically set to 1.

As long this flag is 1 the application should not make any further user input transfer requests.

The user input transfer request pending flag (FLXAnFRITS.UIRP) changes from 1 to 0 when the requested input transfer is completed. As next the pending transfers are processed.

18.3.16.2 Output Data Transfer

When the output data transfer function is enabled, received messages (either in dedicated message buffers or in the FlexRay receive FIFO) are transferred to the local RAM by the output data handler. The output data handler can also transfer the message buffer content to the local RAM on application request. When enabled the output handler is also capable to initiate a transfer when the message buffer status has changed.

(1) Activation and deactivation

The output data transfer function should be activated before usage. The activation of the output transfer hander will initialise the FIFO put and get index pointer and FIFO fill level (FLXAnFROTS.FGIDX[4:0] and FLXAnFROTS.FFL[5:0]) to zero, set the bits FLXAnFROTS.FDA, FLXAnFROTS.OWP, FLXAnFROTS.FWP and FLXAnFROTS.UORP to 0. Also the interrupt status flags FLXAnFROTS.OTIS, FLXAnFROTS.FIS, FLXAnFROTS.OWIS and FLXAnFROTS.FWIS) are set to 0.

The activation has no influence to the data available flags (FLXAnFRDAm.DA[31:0]) which are related to the dedicated buffers; these flags have to be cleared by the application.

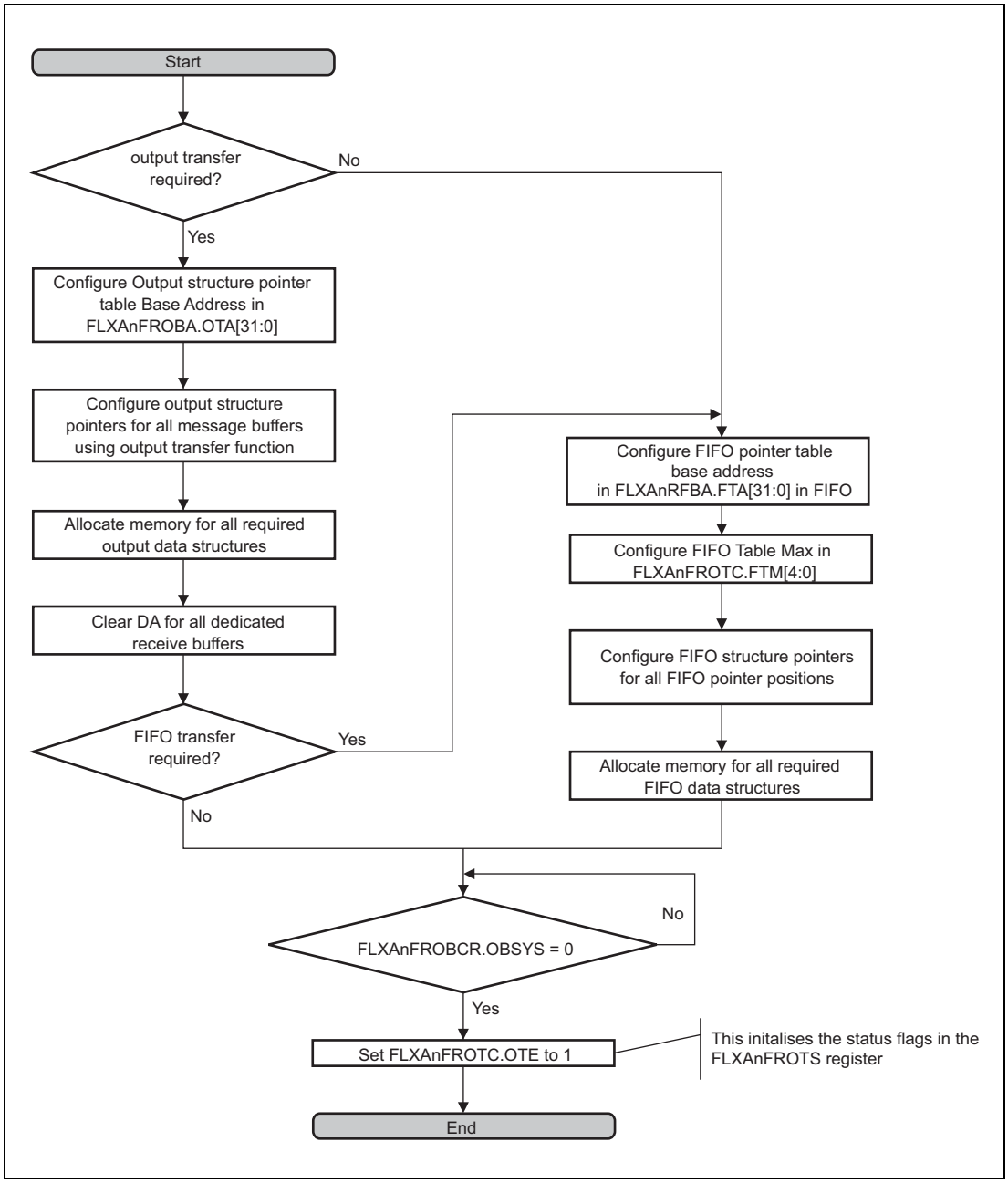

Figure 18.26 Output Transfer Enable Processing Flow

A deactivation request of the output data transfer function can be made at any time. An ongoing transfer will be completed and the completion of this transfer will be flagged. During this time FLXAnFROTS.OTS remains 1.

When FLXAnFROTS.OTS changes from 1 to 0, the output transfer function is deactivated. The data available status flags and the FIFO get index are still retained when the output transfer function is disabled.

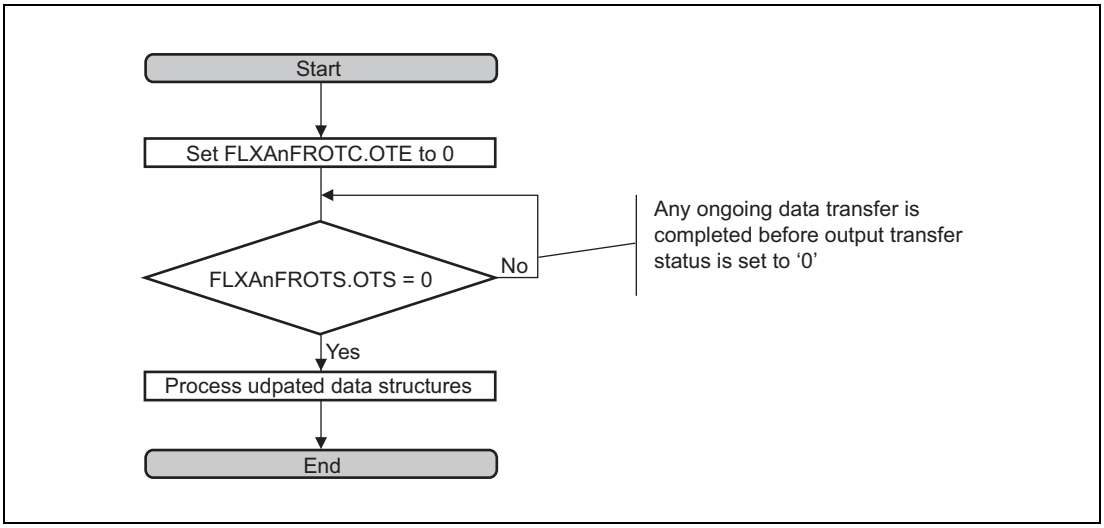

Figure 18.27 Output Transfer Disable Processing Flow

(2) Output transfer data structure

The data in the local RAM is stored in an output data structure. The location of the output data structures are determined by output data structure pointers also located in the local RAM. The output data structure and indexing is visualized in **Figure 18.28**.

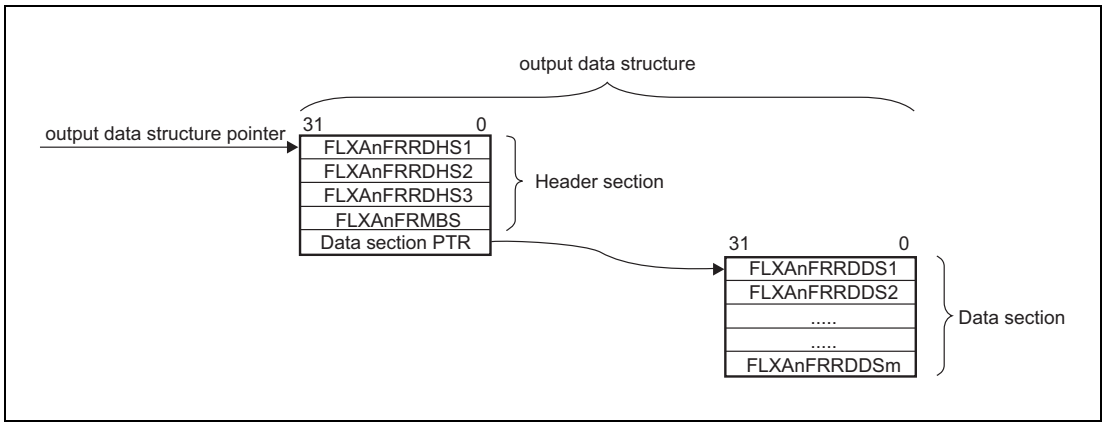

Figure 18.28 Output Data Structure

The output data structure consists of two sections, the header and data section. The header section consists of FLXAnFRRDHS1, FLXAnFRRDHS2, FLXAnFRRDHS3, FLXAnFRMBS and the data section pointer. FLXAnFRRDHS1 is the first element of the structure and has to be aligned to a 32 bit address. The data structure pointer is a reference to the address of FLXAnFRRDHS1. For information about the bit alignment and bit function within the header section refer to **Section 18.3.13.1, Header Partition**.

FLXAnFRRDDS1 is the first element of the data section. The data section pointer needs to be aligned with a 32-bit address corresponding to the FLXAnFRRDDS1 address.

The length of the data section as well as the total structure size to be allocated in the local RAM depends on the configured payload length (bits FLXAnFRRDHS2.PLC[6:0]) of the related message buffer. In case the configured payload length is an odd number of words or the received payload length (bits FLXAnFRRDHS2.PLR[6:0]) is smaller than the configured payload length, the remaining data words in the local RAM are unused and should not be used by the application.

The output data structure is identical for all three kinds of output transfers. In case only the header section is transferred the data section pointer is not evaluated by the output handler and the data section remains unchanged.

(3) Output pointer table

For the output data transfer function the application needs to setup an output pointer table in the local RAM. The location of the first element of this table should be programmed into the output pointer table base address (bits FLXAnFROBA.OTA[6:0]). This base address has to be aligned to a 32 bit address.

The size of the output pointer table is defined by the maximum of: the last configured dedicated message buffer and the highest message buffer number which will be used for the user output transfer request.

The output pointer table holds pointers (output data structure pointers) to the local RAM. location where a memory space is reserved for the target message buffer content (header section and data section).

There is a fixed linear relationship between the address of the entries in the output pointer table and the number of the related message buffers (see **Figure 18.29**): the output pointer table starts with the entry for message buffer number 0 at the address configured in bits FLXAnFROBA.OTA[31:0] and continues in ascending order for each following message buffer number, by 32 bit aligned address (e.g. message buffer 1 at output pointer table address FLXAnFROBA.OTA[31:0] + 4, message buffer 2 at output pointer table address FLXAnFROBA.OTA[31:0] + 8, etc.) for all possible message buffers.

When a set of bit FLXAnFRNDATm.NDp is the only transfer condition (FLXAnFROTC.OTCS is set to 0), only message buffers configured as a dedicated receive buffer or that will be used for user output transfer requests need have valid pointer entries.

When a set of bit FLXAnFRNDATm.NDp or FLXAnFRMBSCm.MBCp is the transfer condition (FLXAnFROTC.OTCS is set to 1), all dedicated receive buffer and dedicated transmit buffers need to have valid pointer entries.

(4) FIFO output pointer table

The FlexRay module internal FIFO can be extended by a queued buffer structure in the local RAM.

If the FlexRay module internal FIFO is used the application needs to setup the FIFO output pointer table. The location of the first element of this table is identified by the FIFO pointer table base address (bits FLXAnFRFBA.FTA[31:0]). This base address has to be aligned to a 32 bit address.

The size of the FIFO pointer table and hence the maximum number of messages that can be added to the queue, is defined by FIFO Table Max (bits FLXAnFROTC.FTM[4:0]).

The FIFO pointer table holds pointers (output data structure pointers) to the local RAM location where a memory space is reserved the target message buffer content (header section and data section). For each table entry a data pointer shall be configured in this table.

(5) Transfer function of dedicated message buffers

To use this transfer function the output transfer has to be activated (see **Section 18.3.16.2 (1), Activation and deactivation**). The activation process requires to setup the output pointer table (see **Section 18.3.16.2 (3), Output pointer table**) in order to specify the destination location (output data structures) for the data to transfer. **Figure 18.29** shows how the output pointer table references the output data structures.

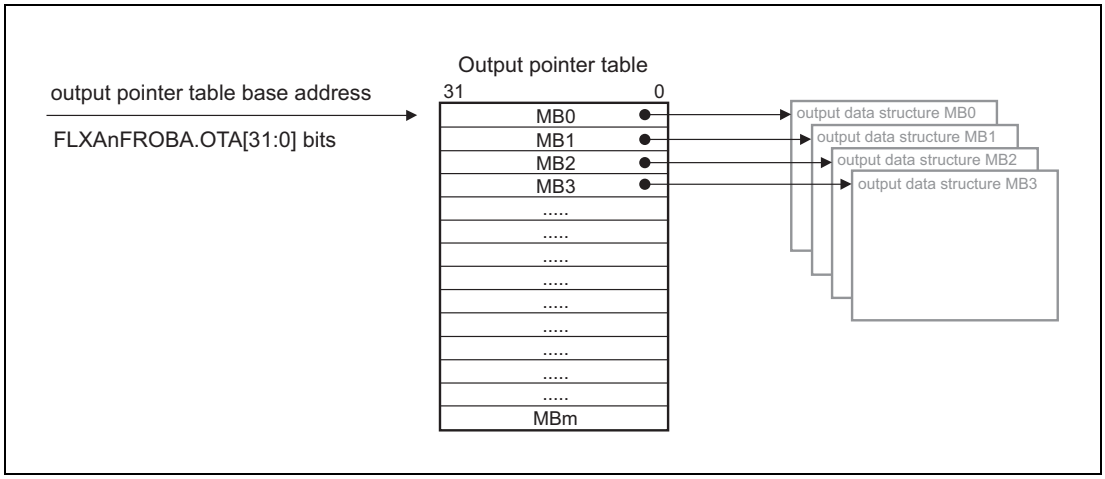

Figure 18.29 Output Data Structure and Indexing

With FLXAnFROTC.OTCS the output transfer condition can be selected between the 'New data only mode' and the 'New data and status changed mode'.

In the 'New data only mode' an output data transfer is initiated when a valid FlexRay data frame has been stored into a dedicated receive buffer which causes the related FLXAnFRNDATm.NDp flag to set. The FLXAnFRNDATm.NDp flag is automatically set to 0 during the transfer procedure. The header section is also transferred and hence the FLXAnFRMBSCm.MBCp flag is set to 0.

In the 'New data and status changed mode' an output data transfer is initiated as described in the 'New data only mode'. In addition an output data transfer is initiated when only the message buffer status has been changed which causes the related FLXAnFRMBSCm.MBCp flag to be set. In this case only the header section is transferred. The FLXAnFRMBSCm.MBCp flag is automatically set to 0 during the transfer procedure.

After transferring the message buffer data from the FlexRay internal message RAM to the output data structure the corresponding data available flag in the FLXAnFRDAm (m = 0 to 3) registers is set to 1. The update of the output data structure is also flagged by the setting of the output transfer interrupt status flag (FLXAnFROTS.OTIS).

As long as the data available flag remains 1 the corresponding output data structure will not be updated.

In the case

- the data available flag is 1 and a valid received message was stored or
- when FLXAnFROTC.OTCS is 1 and the message buffer status was updated,

the output transfer warning interrupt flag (FLXAnFROTS.OWIS) is set to 1 notifying the application that new data is available but the output data structure transfer cannot be processed. In addition FLXAnFROTS.OWP is set to 1 that continuously flags that status of the output transfer warning condition.

If a valid receive message in the FlexRay internal message RAM is overwritten by an additional receive message, the message lost flag (FLXAnFRMBS.MLST) is set to 1. This flag can be evaluated after the message buffer has been transferred into an output data structure.

Following sections are giving a guidance how output data structures can be handled.

(a) Data section copy method

One option is to copy the information from the output data structure to a different location of the local RAM and then release the output data structure by clearing the related data available flag. The application should use the copied information for further processing.

(b) Data structure pointer method

A different option is to modify the output data structure pointer in the output pointer table and to release the output data structure by clearing the related data available flag. The changed output data pointer should refer to a free data structure. The application should use the old data structure for further processing.

(c) Data section pointer method

A third option is to modify the data section pointer in the output data structure and to release the output data structure by clearing the related data available flag. The changed data section pointer should refer to a free memory area. The application should use the old data section for further processing by forwarding the data section pointer.

(6) Transfer function of FIFO message buffers

To use this buffer transfer function the output transfer has to be activated (see **Section 18.3.16.2 (1), Activation and deactivation**). The activation process requires the setup of the FIFO pointer table (see **Section 18.3.16.2 (4), FIFO output pointer table**) in order to specify a location in the local RAM reserved for the storage of the required output data structures.

A FIFO data transfer is initiated when a valid FlexRay data frame has been stored in the FlexRay internal FIFO.

After transfers from the internal FIFO to the output data structure, the FIFO interrupt status flag (FLXAnFROTS.FIS) and FIFO data available bit (FLXAnFROTS.FDA) are set to 1. The bit FLXAnFROTS.FIS can be used as an interrupt source. The bit FLXAnFROTS.FDA indicates that the FIFO is not empty.

The size of the output structure is up to the maximum number of entries in the FIFO table (as set by the FLXAnFROTC.FTM[4:0] bits).

The transfer to the extended FIFO buffer structure is controlled by index pointers. This put index is controlled by the FIFO transfer handler and is incremented after transferring a message to the output data structure.

The FIFO reception handler also maintains a get index which is indicated in FLXAnFROTS.FGIDX[4:0]. The value of this get index is known by the application by either reading the status or maintaining a software variable. The get index (the value after a reset is 00000_B) is incremented by one when the application releases the oldest entry of the FIFO queue by writing 1 to FLXAnFROTS.FDA. By comparing the put index and the get index the FIFO handler knows about the current fill level of the queued buffer structure.

The current FIFO fill level is flagged in FLXAnFROTS.FFL[5:0]. When FLXAnFROTS.FDA is 1, there is at least one entry in the FIFO queue.

In case the queued buffer structure in the local RAM is full (FLXAnFROTS.FFL[5:0] = FLXAnFROTC.FTM[4:0] + 1), no further transfers are initialised, new messages remain in the FlexRay internal FIFO and the FIFO transfer warning interrupt status flag (FLXAnFROTS.FWIS) is set to 1.

In case the FlexRay internal FIFO structure becomes full, messages in the FlexRay internal FIFO structure may be overwritten. The related status flags and configuration registers of the FlexRay core module can be used to generate desired warning notifications.

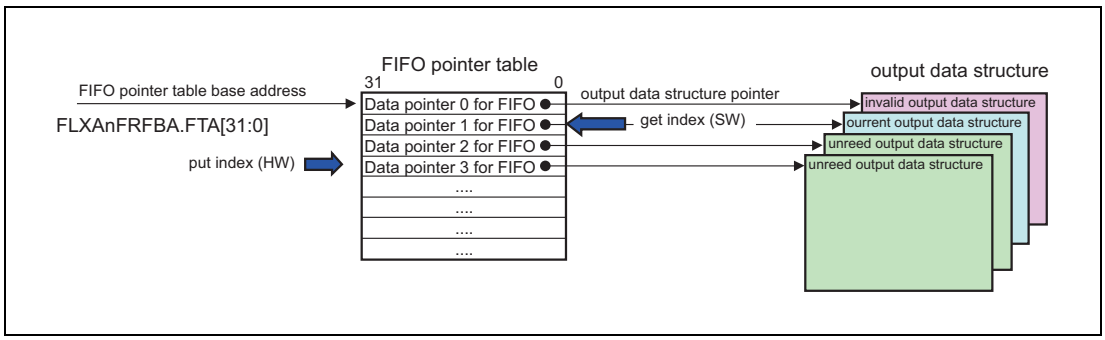

Figure 18.30 FIFO Pointer Table

(7) Transfer function of user output transfer requests

To use this transfer function the output transfer has to be activated (see **Section 18.3.16.2 (1), Activation and deactivation**). The activation process requires to setup the output pointer table (see **Section 18.3.16.2 (3), Output pointer table**) in order to specify the location in the local RAM reserved for the transfer of the data (output data structures).

The application is capable, by using FLXAnFRUOR.UMBNR[6:0], to request a transfer of dedicated message buffer to an output data structure. Except in CONFIG state, message buffers which are part of the FlexRay internal FIFO should not be requested.

The header section is always transferred to the output data structure. The transfer of the data section can be enabled by setting FLXAnFRUOR.URDS to 1. The selected message buffer content is stored in the output data structure location determined by the pointers in the output pointer table.

The data available status and transfer blocking by bits FLXAnFRDAm.DA[31:0] is also used for the user requested transfers. Therefore bits FLXAnFRDAm.DA[31:0] related to the requested buffer number (FLXAnFRUOR.UMBNR[6:0]) should be released before making the transfer request.

After writing to FLXAnFRUOR.UMBNR[6:0], the bit FLXAnFROTS.UORP is set to 1 to indicate that there is a pending user transfer request. When the transfer has been processed the bit FLXAnFROTS.UORP is set to 0, the bit FLXAnFROTS.OTIS is set to 1 and bits FLXAnFRDAm.DA[31:0] related to the requested buffer number (FLXAnFRUOR.UMBNR[6:0]) are set to 1.

User output transfer requests cannot be queued. The application should check the bit FLXAnFROTS.UORP before writing to FLXAnFRUOR.UMBNR[6:0].

User output transfer requests should not be made for message buffers which are pending in the input transfer queue.

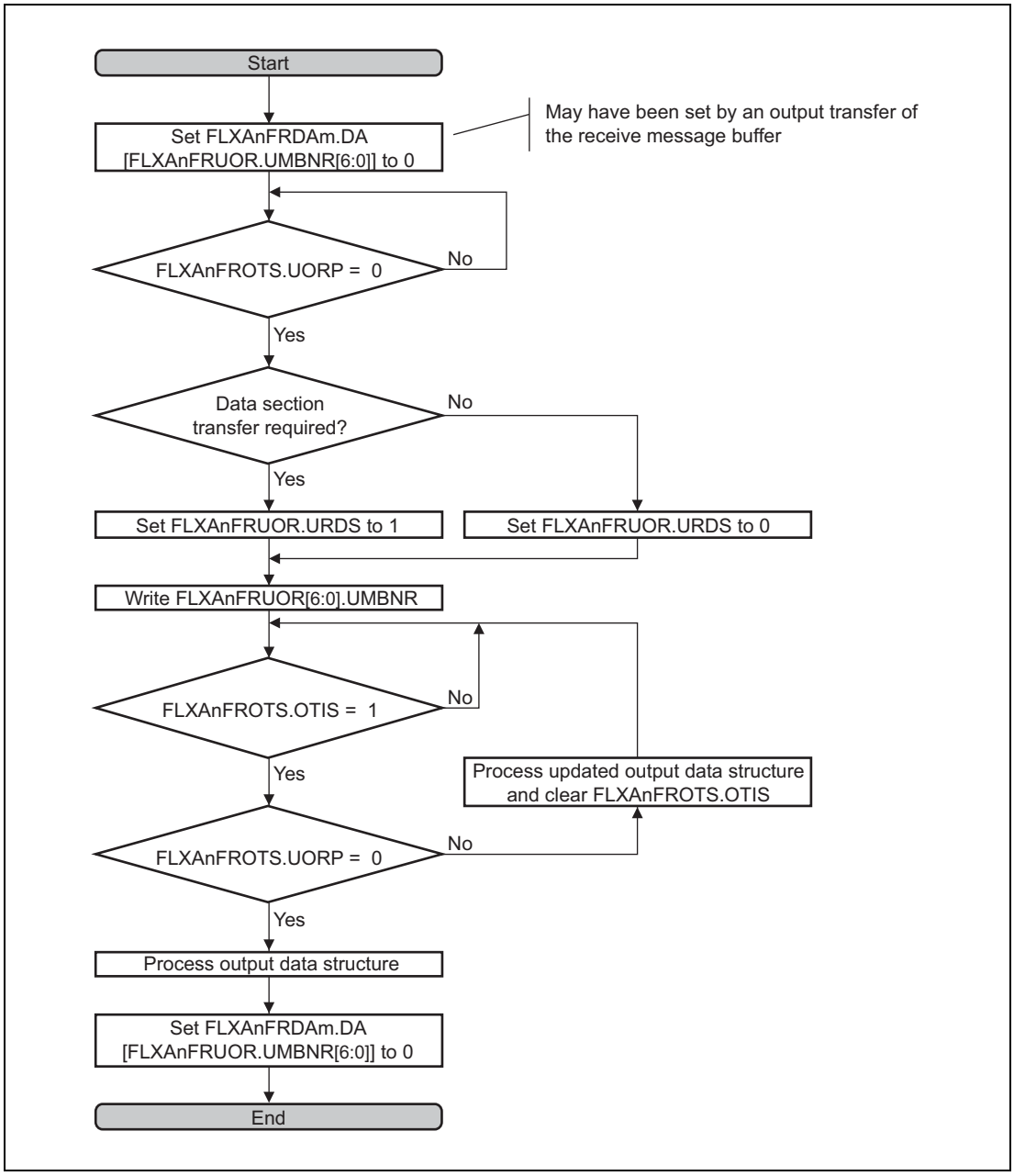

Figure 18.31 User Output Transfer Request Processing Flow

Note that it may be possible that the data structure addressed by a user request is being updated due to a receive message buffer update (which causes bits FLXAnFRDAm.DA[31:0] being set). This set FLXAnFRDAm.DA flags inhibits the user output transfer request. Therefore polling FLXAnFROTS.UORP is not a secure method to identify when the transfer of a requested message buffer has been completed. The bits FLXAnFROTS.OTIS or bits FLXAnFRDAm.DA[31:0] can be used instead. The exact flow depends on the software architecture.

18.3.16.3 Data Structure Transfer Scheduling

Cyclically the different types of transfer requests are checked. In order to guarantee a certain transfer time the different types of transfers have different priorities.

Use requested input transfers have highest priority followed by the transfer of data structures committed into the active input transfer queue. No new output transfer will be started as long as there is a pending input transfer request.

The three output transfer request types are checked in a specific order:

(1) All dedicated message buffers in ascending order

When FLXAnFROTC.OTCS is set to 0, set flags in the FLXAnFRNDATm.ND[31:0] register are causing a transfer of the message buffer to the output data structure if the destination area is free (bits FLXAnFRDAm.DA[31:0] are 0).

When FLXAnFROTC.OTCS is set to 1, set flags in the FLXAnFRNDATm.ND[31:0] register or set flags in the FLXAnFRMBSCm.MBC[31:0] register are causing a transfer of the message buffer to the output data structure if the destination area is free (bits FLXAnFRDAm.DA[31:0] are 0).

(2) FlexRay internal FIFO

When the FlexRay internal FIFO is not empty and there is a free destination area, one FIFO message is transferred into the output data structure specified by the FIFO pointer table.

(3) User output request

If there is a pending user output transfer request, one message buffer is transferred into the corresponding output data structure.

The check sequence is suspended when an input transfer occurs.

18.3.16.4 Behavior in Case of Data Transfer Access Error

The memory areas accessed by the data transfer function may be protected by a memory protection unit (MPU). When the MPU flags an access to a protected address caused by an input or output transfer, an access error event is generated and the related bit in the FLXAnFRAES register is set.

The ongoing transfer is immediately terminated but succeeding transfers are processed and may generate further access errors. Any following access errors are only flagged in FLXAnFRAES.MAE. The other status flags are not updated.

(1) Access error during input transfer

When an access error occurs during an input transfer:

- The ongoing transfer is immediately terminated. The FlexRay internal message RAM will not be updated
- The address, the FlexRay module wanted to access to, is captured in the FLXAnFRAEA register
- FLXAnFRAES.IAE is set to 1
- The input pointer table index is flagged in FLXAnFRAES.EIDX[7:0]
- In case of an normal input transfer the to the transfer related bits FLXAnFRDAm.DA[31:0] is set to 0
- In case of an user input transfer request FLXAnFRITS.UIRP is set to 0

With the given status information the application is able to identify and correct the faulty data structure.

In addition the application needs to clear the input access error flag (FLXAnFRAES.IAE).

(2) Access error during output transfer

When an access error occurs during an output transfer:

- The ongoing transfer is immediately terminated but the update of the data structure may have started.
- The address, the FlexRay module wanted to access to, is captured in the FLXAnFRAEA register
- FLXAnFRAES.OAE is set to 1
- The output pointer table index is flagged in FLXAnFRAES.EIDX[7:0]
- In case of an normal output transfer the to the transfer related bits FLXAnFRDAm.DA[31:0] remains 0 and no output transfer interrupt is generated
- In case of an user output transfer request FLXAnFROTS.UORP is set to 0

With the given status information the application is able to identify and correct the faulty data structure. The data structure in the local RAM cannot be treated as valid.

In addition the application needs to clear the output access error flag (FLXAnFRAES.OAE).

The FlexRay module internal transfer of the message buffer is completed before the local RAM access error is detected. The output transfer will not be re-initiated. To avoid loss of data, the application can perform a user output transfer request of this message buffer to a correct local RAM location.

(3) Access error during FIFO transfer

When an access error occurs during an FIFO transfer:

- The ongoing transfer is immediately terminated
- The address, the FlexRay module wanted to access to, is captured in the FLXAnFRAEA register
- FLXAnFRAES.FAE is set to 1
- The FIFO pointer table index is flagged in FLXAnFRAES.EIDX[7:0]
- The FIFO index pointer are not changed and hence the FIFO status flags are unchanged

With the given status information the application is able to identify and correct the faulty data structure.

In addition the application needs to clear the FIFO access error flag (FLXAnFRAES.FAE).

The data in the local RAM cannot be treated as valid and is not released to the application. The message cannot be recovered.

18.3.16.5 Behaviors in Case of RAM Read Errors

The FlexRay internal message RAM has an ECC checking mechanism. In case an uncorrectable RAM read error occurs, the application has to analyze the status in the FLXAnFRMHDS register and react as described in **Section 18.3.16.3, Data Structure Transfer Scheduling**. The input and output transfer handler reacts also on these errors detected in the message RAM when the error is related to an active transfer.

In addition, the TBFA and TBFB have an ECC checking mechanism as well. An uncorrectable RAM read errors does not impact the data transfer functionality but have to be handled as described in **Section 18.3.13.1 (4), Message Buffer Status FLXAnFRMBS (word 3)**.

In all cases, data causing a read error is never transferred to the local RAM. If there is no recovery available in the application, the message is lost.

(1) Read error during transfer from TBF to MBF

This internal transfer is done for each valid FlexRay message received.

A read error can only occur when reading the header section in the FlexRay Message RAM (see read error flags in FLXAnFRMHDS). In this case, the message buffer needs to be re-configured.

For dedicated receive message buffers, the related flags FRNDATm.ND[31:0] will not get set. Consequently the affected message buffer will not be transferred to the output data structure.

For the FlexRay internal FIFO buffers, flags FRNDATm.ND[31:0] are not set but the FlexRay internal FIFO put index is incremented. Due to this, a transfer procedure from the FlexRay internal FIFO buffer to the output buffer is started. However, if the read error is still present in the header section, updating of the output data structure will not start (see **Section 18.3.16.5 (2), Read error during transfer from MBF to OBF**); thus the data in the local RAM remains correct.

Note that the correction or any other reconfiguration of FIFO related to message buffers while there are pending FIFO transfers may result in incorrect data in the local RAM. It is strongly recommended to deactivate the output data transfer before starting the reconfiguration and flush the FlexRay internal FIFO before reactivation of the output data transfer.

(2) Read error during transfer from MBF to OBF

This internal transfer is done for every output data transfer (dedicated reception, FIFO, user requested).

A read error can occur in the header and data section (see read error flags in FLXAnFRMHDS). In both cases the message gets lost. If the error is located in the header section, the message buffer needs to be re-configured. If the error is located in the data section, the error is corrected with the next data section update.

When a read error occurs during the transfer from the message RAM to the output buffer, the output data structure will not be updated and the data available will not be set to 1. The FIFO put index and the FIFO fill level are not changed also.

In case of user output transfer request, FLXAnFROTS.UORP is set to 0 even if there was no update of the output data structure.

(3) Read error during transfer from IBF to MBF

This internal transfer is done for every input data transfer.

A read error can occur only when there is no update of the header section requested (the bit LHS in FLXAnFRWRHS4 is set to 0) due to the reading of the header section from the message RAM (see read error flags in FLXAnFRMHDS). In this case, the message buffer needs to be re-configured.

When a read error occurs during the input data transfer, the actually transferred message in the input queue gets lost.

(4) Message RAM read errors

Read errors when reading the header section are flagged in the FLXAnFRMHDS register.

Depending on the buffer type and set buffer protection, a reconfiguration of the message buffer may not be possible.

The input transfer function cannot be used to reconfigure a locked message buffer using the method described in **Section 18.3.13.4 (3), Temporary Unlocking of Header Section**.

Before reconfiguring a locked buffer, the user should disable the input transfer function and the output transfer function.

Section 19 Single Edge Nibble Transmission (RSENT)

This section describes the Renesas single edge nibble transmission (RSENT) module.

The first subsection describes all the characteristics specific to the RH850/P1x such as channels, register base addresses, and input/output signal names.
The second and subsequent subsections describe characteristics common to all the versions.

19.1 RH850/P1x RSENT Overview

19.1.1 Number of Channels

The RH850/P1x includes six RSENT channels.

Table 19.1 RSENT Channels

	RSENT
Number of channels	<100-pin> 5 <144-pin> 6
Name	<100-pin> RSENT0, RSENT1, RSENT3, RSENT4, RSENT5 <144-pin> RSENT0, RSENT1, RSENT2, RSENT3, RSENT4, RSENT5

Index n

This section identifies each RSENT channel by “n” (n = 0 to 5). For example, the RSENT timestamp register is described as RSENTnTSPC.

19.1.2 Register Base Addresses

RSENT register base addresses are represented by an offset from the base address <RSENTn_base>.

The following table shows the base address <RSENTn_base> of each RSENT module.

Table 19.2 Register Base Address <RSENTn_base>

RSENTn Channel	<RSENTn_base> Address
RSENT0	FFE0 5000_H
RSENT1	FFE0 6000_H
RSENT2	FFE0 7000_H
RSENT3	FFE0 8000_H
RSENT4	FFE0 9000_H
RSENT5	FFE0 $A000_H$

19.1.3 Clock Supply

The RSENT clock supply is shown in the following table.

Table 19.3 RSENT Clock Source

Module	Clock	Supply Clock Name
RSENTn	pclk	High-speed peripheral clock CLK_HSB
	clkc	

19.1.4 Interrupts and DMA/DTS

The RSENT module can generate the following interrupt requests.

Table 19.4 RSENT Interrupt Requests

RSENTn Signal	Function	Connected to
RSENT0		
INT_SENT_ST	RSENT status interrupt	• Interrupt controller 232 (INTSENT0SI)
INT_SENT_RX	RSENT receive interrupt	• Interrupt controller 233 (INTSENT0RI) • DMA/DTS controller trigger 119
RSENT1		
INT_SENT_ST	RSENT status interrupt	• Interrupt controller 234 (INTSENT1SI)
INT_SENT_RX	RSENT receive interrupt	• Interrupt controller 235 (INTSENT1RI) • DMA/DTS controller trigger 120
RSENT2		
INT_SENT_ST	RSENT status interrupt	• Interrupt controller 236 (INTSENT2SI)
INT_SENT_RX	RSENT receive interrupt	• Interrupt controller 237 (INTSENT2RI) • DMA/DTS controller trigger 121
RSENT3		
INT_SENT_ST	RSENT status interrupt	• Interrupt controller 238 (INTSENT3SI)
INT_SENT_RX	RSENT receive interrupt	• Interrupt controller 239 (INTSENT3RI) • DMA/DTS controller trigger 122
RSENT4		
INT_SENT_ST	RSENT status interrupt	• Interrupt controller 240 (INTSENT4SI)
INT_SENT_RX	RSENT receive interrupt	• Interrupt controller 241 (INTSENT4RI) • DMA/DTS controller trigger 123
RSENT5		
INT_SENT_ST	RSENT status interrupt	• Interrupt controller 242 (INTSENT5SI)
INT_SENT_RX	RSENT receive interrupt	• Interrupt controller 243 (INTSENT5RI) • DMA/DTS controller trigger 124

19.1.5 Reset Sources

RSENT reset sources are listed in the following table. RSENT is initialized by these reset sources.

Table 19.5 RSENT Reset Signal

Channel	Reset Signal
RSENTn	• Reset controller SYSRES

19.1.6 External Input/Output Signals

External input/output signals of RSENT are listed below.

Table 19.6 RSENTn External Input/Output Signals

RSENTn Signal	Function	Connected to
RSENT0		
sent_rx	RSENT data input	Port SENT0RX
sent_spc	RSENT SPC extension output	Port SENT0SPCO
RSENT1		
sent_rx	RSENT data input	Port SENT1RX
sent_spc	RSENT SPC extension output	Port SENT1SPCO
RSENT2		
sent_rx	RSENT data input	Port SENT2RX
sent_spc	RSENT SPC extension output	Port SENT2SPCO
RSENT3		
sent_rx	RSENT data input	Port SENT3RX
sent_spc	RSENT SPC extension output	Port SENT3SPCO
RSENT4		
sent_rx	RSENT data input	Port SENT4RX
sent_spc	RSENT SPC extension output	Port SENT4SPCO
RSENT5		
sent_rx	RSENT data input	Port SENT5RX
sent_spc	RSENT SPC extension output	Port SENT5SPCO

19.1.7 Combinations of Pins and Ports

Combinations of RSENT pins and ports are listed in the following table.

Table 19.7 Combinations of Pins and Ports

Function	Pin Name	Port Name	
		Group 1	Group 2
RSENT0	SENT0RX	P5_5	—
	SENT0SPCO	P0_8 *1/ P5_5 / P5_6	—
RSENT1	SENT1RX	P5_8	—
	SENT1SPCO	P0_7*1 / P5_8 / P5_9	—
RSENT2	SENT2RX	P5_12*1	—
	SENT2SPCO	P0_6*1 / P5_12*1 / P5_13*1	—
RSENT3	SENT3RX	P5_14	P5_11*1
	SENT3SPCO	P0_0 / P0_5*1 / P5_14 / P5_15*1	P0_0 / P0_5*1 / P5_11*1 / P5_15*1
RSENT4	SENT4RX	P0_1	—
	SENT4SPCO	P0_1 / P0_4*1 / P3_11	—
RSENT5	SENT5RX	P0_2	—
	SENT5SPCO	P0_2 / P0_3*1	—

Note 1. Available in 144-pin devices.

19.2 Functions

Overview of Functions

The RSENT interface supports the following standard specification (SAE J2716 version JAN2010) functions:

- Triple speed expansion Tick Time: Clock cycle (1 μs to 90 μs)
- Variable data transmission rate
  - 24.7 kbps to 64.9 kbps: 3 clock rate 6 nibble data
  - 74.1 kbps to 194.7 kbps: 1 clock rate 6 nibble data
- Unidirectional communication: Between the sensor and MCU
- Bidirectional communication: Between the sensor and MCU (supported in SPC mode)
- Single edge data transmission: Coded by the temporal distance of two serially-detected falling edges on a data line
- Transmission frame with up to 6 data nibbles + status and communications nibbles
- Data transmission protected with CRC is available.
  - CRC data can be read with the RSENTnSRXD.SCRC bits.
- Calibration phrase in each data frame
- 1-wire interface (sent_rx and sent_spc share a single terminal.)
- Multiple sensors can connect to the RSENT channel that has the standard expansion function. Received data from sensors is detected by software or DMA.
- The timestamp function: Master or slave can be selected for the RSENT module.
- The RSENT circuit consists of the following functions:
  - Data receive part
  - Clock recovery
  - Register group

19.2.1 Block Diagram

The following figure shows a block diagram of the RSENT module.

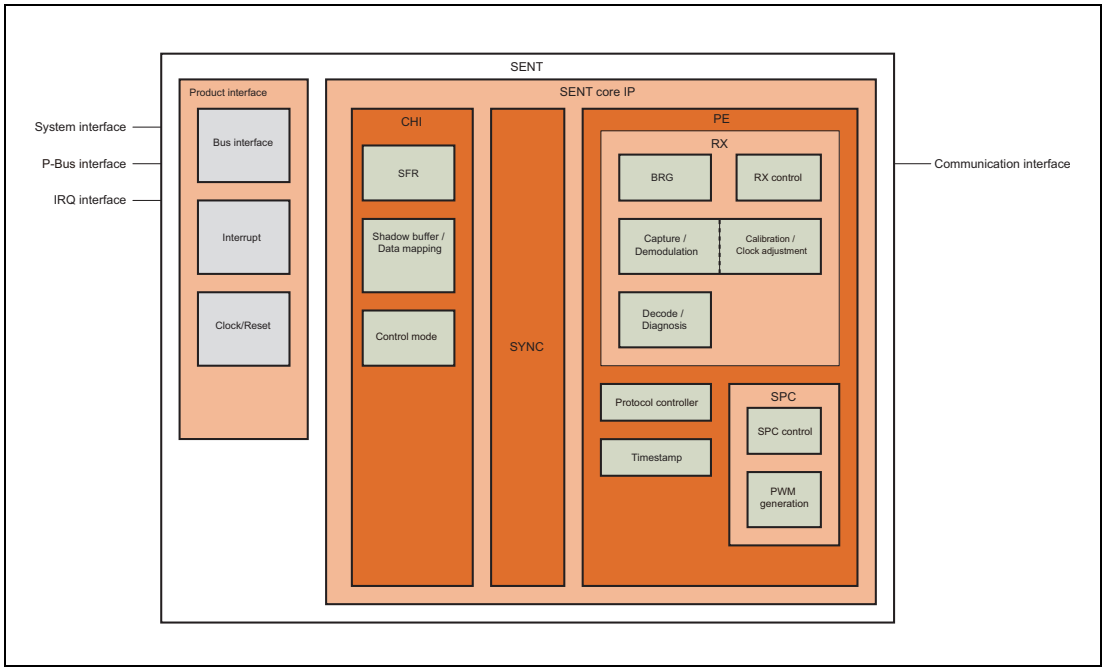

Figure 19.1 Block Diagram of RSENT

19.3 Registers

RSENTn is controlled and operated by the following registers.

For <RSENTn_base>, refer to **Section 19.1.2, Register Base Addresses**.

Table 19.8 Overview of RSENTn Registers

Register Name	Abbreviation	Address
RSENT timestamp register	RSENTnTSPC	<RSENTn_base> + 0000_H
RSENT timestamp counter	RSENTnTSC	<RSENTn_base> + 0004_H
RSENT communications configuration register	RSENTnCC	<RSENTn_base> + 0010_H
RSENT baud rate prescaler register	RSENTnBRP	<RSENTn_base> + 0014_H
RSENT interrupt/DMA enable register	RSENTnIDE	<RSENTn_base> + 0018_H
RSENT mode control register	RSENTnMDC	<RSENTn_base> + $001C_H$
RSENT SPC transmission register	RSENTnSPCT	<RSENTn_base> + 0020_H
RSENT mode status register	RSENTnMST	<RSENTn_base> + 0024_H
RSENT communication status register	RSENTnCS	<RSENTn_base> + 0028_H
RSENT communication status clear register	RSENTnCSC	<RSENTn_base> + $002C_H$
RSENT slow channel receive timestamp register	RSENTnSRTS	<RSENTn_base> + 0030_H
RSENT slow channel receive data register	RSENTnSRXD	<RSENTn_base> + 0034_H
RSENT calibration pulse length register	RSENTnCPL	<RSENTn_base> + 0038_H
RSENT message length register	RSENTnML	<RSENTn_base> + $003C_H$
RSENT fast channel receive timestamp register	RSENTnFRTS	<RSENTn_base> + 0040_H
RSENT fast channel receive data register	RSENTnFRXD	<RSENTn_base> + 0044_H
RSENT timestamp mode selection register	RSENTTSSEL	<RSENT0_base> + $A000_H$

19.3.1 RSENTnTSPC — RSENT Timestamp Register

Access: This register can be read/written in 32-bit units.

Address: <RSENTn_base> + 0000_H

Value after reset: $0000\ 0000_H$ This register is initialized by various types of reset.

Bit	31	30	29	28	27	26	25	24	23	22	21	20	19	18	17	16
	—	—	—	—	—	—	—	—	—	—	—	—	—	—	—	TMS
Value after reset	0	0	0	0	0	0	0	0	0	0	0	0	0	0	0	0
R/W	R	R	R	R	R	R	R	R	R	R	R	R	R	R	R	R/W

Bit	15	14	13	12	11	10	9	8	7	6	5	4	3	2	1	0
	—	TTM[6:0]							—	TTPV[6:0]						
Value after reset	0	0	0	0	0	0	0	0	0	0	0	0	0	0	0	0
R/W	R	R/W	R/W	R/W	R/W	R/W	R/W	R/W	R	R/W	R/W	R/W	R/W	R/W	R/W	R/W

Table 19.9 RSENTnTSPC Register Contents

Bit Position	Bit Name	Function
31 to 17	Reserved	When read, the value after reset is read. When writing, write the value after reset.
16	TMS	Timestamp Mode Selection 0: Master mode 1: Slave mode
15	Reserved	When read, the value after reset is read. When writing, write the value after reset.
14 to 8	TTM[6:0]	Timestamp Tick Multiplier 0000000_B: 1 0000001_B: 2 0000010_B: 3 : 1111111_B: 128
7	Reserved	When read, the value after reset is read. When writing, write the value after reset.
6 to 0	TTPV[6:0]	Timestamp Tick Prescaler Value 0000000_B: 1 0000001_B: 2 0000010_B: 3 : 1111111_B: 128

RSENTnTSPC.TMS (Timestamp Mode Selection)

When this bit is set to 0, the timestamp counter operates in master mode.

Writing 0000 0000_H to RSENTnTSC by the module set as the master leads to clearing of the timestamps in that module and in the channels set as slaves.

The CPU can only write to this bit if the RSENT module is in the CONFIGURATION mode (the RSENTnMST.OMS bits are 001_B).

The RSENT operating in slave mode needs to have the same settings in the RESNT that is operated as a master and timestamp counter prescaler.

RSENTnTSPC.TTM (Timestamp Tick Multiplier)

These bits define the multiplication value of the 1-µs time tick used for the timestamp counter.

For timestamp clock configuration, see **Section 19.5.1, Timestamp**.

The CPU can only write to these bits if the RSENT module is in the CONFIGURATION mode (the RSENTnMST.OMS bits are 001_B).

RSENTnTSPC.TTPV (Timestamp Tick Prescaler Value)

These bits define the prescaler value to generate a 1-µs clock tick.

For timestamp clock configuration, see **Section 19.5.1, Timestamp**.

The CPU can only write to these bits if the RSENT module is in the CONFIGURATION mode (the RSENTnMST.OMS bits are 001_B).

The CPU should configure this value in such a way that based on the supplied communication clock, a 1-µs clock tick is generated.

19.3.2 RSENTnTSC — RSENT Timestamp Counter

Access: This register can be read/written in 32-bit units.

Address: <RSENTn_base> + 0004_H

Value after reset: $0000\ 0000_H$ This register is initialized by various types of reset.

Bit	31	30	29	28	27	26	25	24	23	22	21	20	19	18	17	16
	TS[31:16]															
Value after reset	0	0	0	0	0	0	0	0	0	0	0	0	0	0	0	0
R/W	R/W	R/W	R/W	R/W	R/W	R/W	R/W	R/W	R/W	R/W	R/W	R/W	R/W	R/W	R/W	R/W

Bit	15	14	13	12	11	10	9	8	7	6	5	4	3	2	1	0
	TS[15:0]															
Value after reset	0	0	0	0	0	0	0	0	0	0	0	0	0	0	0	0
R/W	R/W	R/W	R/W	R/W	R/W	R/W	R/W	R/W	R/W	R/W	R/W	R/W	R/W	R/W	R/W	R/W

Table 19.10 RSENTnTSC Register Contents

Bit Position	Bit Name	Function
31 to 0	TS[31:0]	Timestamp counter value

RSENTnTSC.TS (Timestamp)

These bits indicate the current timestamp counter value.

The CPU can only write desired values to these bits if the RSENT module is in the CONFIGURATION mode (the RSENTnMST.OMS bits are 001_B).

When the timestamp counter is configured to operate in slave mode (RSENTnTSPC.TMS = 1), writing to this register has no effect when the RSENT module is in either of the OPERATION IDLE or OPERATION ACTIVE modes (the RSENTnMST.OMS bits are either 011_B or 101_B).

The timestamp counter is incremented on every timestamp counter tick (as configured in the RSENTnTSPC.TTPV and RSENTnTSPC.TTM bits) when the RSENT module is in either of the OPERATION IDLE or OPERATION ACTIVE modes (the RSENTnMST.OMS bits are either 011_B or 101_B).

When the timestamp counter is configured to operate in master mode (RSENTnTSPC.TMS = 0), the CPU writes $0000\ 0000_H$ to these bits and RSENTnTSC.TS is set to $0000\ 0000_H$.

When the slave mode setting is made for the timestamp counter of channel n (RSENTnTSPC.TMS = 1), writing to the timestamp counter of the channel that is the master for channel n leads to the RSENTnTSC.TS bits being set to $0000\ 0000_H$.

For timestamp mode selection, see **Section 19.5.1, Timestamp**.

19.3.3 RSENTnCC — RSENT Communications Configuration Register

Access: This register can be read/written in 32-bit units.

Address: <RSENTn_base> + 0010_H

Value after reset: $0000\ 0000_H$ This register is initialized by various types of reset.

Bit	31	30	29	28	27	26	25	24	23	22	21	20	19	18	17	16
	—	—	—	—	—	—	—	—	—	—	—	—	—	—	—	—
Value after reset	0	0	0	0	0	0	0	0	0	0	0	0	0	0	0	0
R/W	R	R	R	R	R	R	R	R	R	R	R	R	R	R	R	R

Bit	15	14	13	12	11	10	9	8	7	6	5	4	3	2	1	0
	—	—	—	SOPC	FCM	SCCD	FCCD	—	SMF[1:0]		PPTC	PPC	NDN[2:0]			SPCE
Value after reset	0	0	0	0	0	0	0	0	0	0	0	0	0	0	0	0
R/W	R	R	R	R/W	R/W	R/W	R/W	R	R/W	R/W	R/W	R/W	R/W	R/W	R/W	R/W

Table 19.11 RSENTnCC Register Contents (1/2)

Bit Position	Bit Name	Function
31 to 13	Reserved	When read, the value after reset is read. When writing, write the value after reset.
12	SOPC	SPC Output Polarity Control 0: SPC pulse active high 1: SPC pulse active low
11	FCM	Frame Check Method 0: Check against next calibration pulse 1: Check against previous calibration pulse
10	SCCD	Slow Channel CRC Check 0: Slow channel CRC check enabled 1: Slow channel CRC check disabled
9	FCCD	Fast Channel CRC Check 0: Fast channel CRC check enabled 1: Fast channel CRC check disabled
8	—	When read, the value after reset is read. When writing, write the value after reset.
7, 6	SMF	Serial Message Format 00_B: No serial message extraction 01_B: Short serial message format 10_B: Enhanced serial message format 11_B: Setting prohibited
5	PPTC	Pause Pulse Type Configuration 0: Pause pulse for variable message length 1: Pause pulse for fixed message length
4	PPC	Pause Pulse Configuration 0: Pause pulse absent 1: Pause pulse present
3 to 1	NDN[2:0]	Number of Data Nibbles 000_B: 1 data nibble 001_B: 2 data nibbles 010_B: 3 data nibbles 011_B: 4 data nibbles 100_B: 5 data nibbles 101_B: 6 data nibbles Other than above: Setting prohibited

Table 19.11 RSENTnCC Register Contents (2/2)

Bit Position	Bit Name	Function
0	SPCE	SPC Mode Enable 0: SPC mode disabled 1: SPC mode enabled

RSENTnCC.SOPC (SPC Output Polarity Control)

When this bit is set to 0, the SPC pulse is sent as an active high signal. The default output value is low level.

When this bit is set to 1, the SPC pulse is sent as an active low signal. The default output value is high level.

For SPC operation, see also **Section 19.7, SPC Function**.

The CPU can only write to this bit if the RSENT module is in the CONFIGURATION mode (the RSENTnMST.OMS bits are 001_B).

NOTE

Any change to this bit from the default value becomes effective on the output value when entering the OPERATION_ACTIVE mode (RSENTnMST.OMS is 101_B). When entering RESET mode (RSENTnMST.OMS is 000_B), the output level is set to the default value (low level).

RSENTnCC.FCM (Frame Check Method)

When this bit is set to 0, the current calibration pulse is compared to the next received calibration pulse.

The buffer update mechanism is operating according to the preferred option as described in SAE J2716 2010.

When this bit is set to 1, the current calibration pulse is compared to the previously received calibration pulse.

The buffer update mechanism is operating according to the second option as described in SAE J2716 2010 which should be only used if extra latency to process the second calibration pulse cannot be tolerated.

For buffer update timings, see also **Section 19.6.2.3, Fast Channel Message Reception**.

The CPU can only write to this bit if the RSENT module is in the CONFIGURATION mode (the RSENTnMST.OMS bits are 001_B).

RSENTnCC.SCCD (Slow Channel CRC Check Disable)

When this bit is set to 1, the CRC check for the slow channel is disabled. In this case, messages are stored in the slow channel message reception buffer with the received CRC.

When this bit is set to 1, the RSENTnCS.SCS bit is not set.

The CPU can only write to this bit if the RSENT module is in the CONFIGURATION mode (the RSENTnMST.OMS bits are 001_B).

RSENTnCC.FCCD (Fast Channel CRC Check Disable)

When this bit is set to 1, the CRC check for the fast channel is disabled. In this case, messages are stored in the fast channel message reception buffer with the received CRC.

When this bit is set to 1, the RSENTnCS.FCS bit is not set.

The CPU can only write to this bit if the RSENT module is in the CONFIGURATION mode (the RSENTnMST.OMS bits are 001_B).

RSENTnCC.SMF (Serial Message Format)

These bits define the serial message format expected to be received for automatic extraction.

When these bits are set to 00_B, no serial message is extracted and the communications and status nibble are stored in the RSENTnSRXD register.

The CPU can only write to these bits if the RSENT module is in the CONFIGURATION mode (the RSENTnMST.OMS bits are 001_B).

The CPU shall set these bits to 00_B when RSENTnCC.SPCE is set to 1 and more than one sensor is connected to the RSENT module.

RSENTnCC.PPTC (Pause Pulse Type Configuration)

This bit defines the pause pulse type.

The CPU can only write to this bit if the RSENT module is in the CONFIGURATION mode (the RSENTnMST.OMS bits are 001_B).

The CPU should not set this bit to 1 when the RSENTnCC.PPC bit is set to 0.

RSENTnCC.PPC (Pause Pulse Configuration)

This bit defines the presence or absence of the pause pulse.

The CPU can only write to this bit if the RSENT module is in the CONFIGURATION mode (the RSENTnMST.OMS bits are 001_B).

RSENTnCC.NDN (Number of Data Nibbles)

These bits define the number of data nibbles included in an RSENT message.

The CPU can only write to these bits if the RSENT module is in the CONFIGURATION mode (the RSENTnMST.OMS bits are 001_B).

RSENTnCC.SPCE (SPC Mode Enable)

This bit enables the SPC mode.

For details about SPC mode operation, see also **Section 19.7, SPC Function**.

The CPU can only write to this bit if the RSENT module is in the CONFIGURATION mode (the RSENTnMST.OMS bits are 001_B).

19.3.4 RSENTnBRP — RSENT Baud Rate Prescaler Register

Access: This register can be read/written in 32-bit units.

Address: <RSENTn_base> + 0014_H

Value after reset $0000\ 0000_H$ This register is initialized by various types of reset.

Bit	31	30	29	28	27	26	25	24	23	22	21	20	19	18	17	16
	—	—	—	—	TTF[3:0]				—	TTI[6:0]						
Value after reset	0	0	0	0	0	0	0	0	0	0	0	0	0	0	0	0
R/W	R	R	R	R	R/W	R/W	R/W	R/W	R	R/W	R/W	R/W	R/W	R/W	R/W	R/W

Bit	15	14	13	12	11	10	9	8	7	6	5	4	3	2	1	0
	—	SCDV[6:0]							—	—	—	SCMV[4:0]				
Value after reset	0	0	0	0	0	0	0	0	0	0	0	0	0	0	0	0
R/W	R	R/W	R/W	R/W	R/W	R/W	R/W	R/W	R	R	R	R/W	R/W	R/W	R/W	R/W

Table 19.12 RSENTnBRP Register Contents (1/2)

Bit Position	Bit Name	Function
31 to 28	Reserved	When read, the value after reset is read. When writing, write the value after reset.
27 to 24	TTF[3:0]	Time Tick Decimal Fraction 0000_B: 0.0 µs 0001_B: 0.1 µs 0010_B: 0.2 µs : 1000_B: 0.8 µs 1001_B: 0.9 µs Other than above: Setting prohibited
23	Reserved	When read, the value after reset is read. When writing, write the value after reset.
22 to 16	TTI[6:0]	Time Tick Integer 0000000_B: 1 µs 0000001_B: 2 µs 0000010_B: 3 µs : 1011000_B: 89 µs 1011001_B: 90 µs Other than above: Setting prohibited
15	Reserved	When read, the value after reset is read. When writing, write the value after reset.
14 to 8	SCDV[6:0]	Sample Clock Division Value 0000000_B: 1 0000001_B: 2 0000010_B: 3 : 1111110_B: 127 1111111_B: 128
7 to 5	Reserved	When read, the value after reset is read. When writing, write the value after reset.

Table 19.12 RSENTnBRP Register Contents (2/2)

Bit Position	Bit Name	Function
4 to 0	SCMV[4:0]	Sample Clock Multiplication Value 00000_B: 1 00001_B: 2 00010_B: 3 : 11110_B: 31 11111_B: 32

RSENTnBRP.TTF (Time Tick Decimal Fraction)

These bits define the decimal part of the tick length in 0.1-µs granularity.

For tick length configuration, see **Section 19.5.2.2, RX and SPC Tick Settings**.

The CPU can only write to these bits if the RSENT module is in the CONFIGURATION mode (the RSENTnMST.OMS bits are 001_B).

RSENTnBRP.TTI (Time Tick Integer)

These bits define the integer part of the tick length.

For tick length configuration, see **Section 19.5.2.2, RX and SPC Tick Settings**.

The CPU can only write to these bits if the RSENT module is in the CONFIGURATION mode (the RSENTnMST.OMS bits are 001_B).

RSENTnBRP.SCDV (Sample Clock Division Value)

These bits define the division value for the sample clock generation logic.

For RSENTnBRP settings, see **Section 19.5.2.1, RX BRP Setting**.

The CPU can only write to these bits if the RSENT module is in the CONFIGURATION mode (the RSENTnMST.OMS bits are 001_B).

RSENTnBRP.SCMV (Sample Clock Multiplication Value)

These bits define the multiplication value for the sample clock generation logic.

For RSENTnBRP settings, see **Section 19.5.2.1, RX BRP Setting**.

The CPU can only write to these bits if the RSENT module is in the CONFIGURATION mode (the RSENTnMST.OMS bits are 001_B).

19.3.5 RSENTnIDE — RSENT Interrupt/DMA Enable Register

Access: This register can be read/written in 32-bit units.

Address: <RSENTn_base> + 0018_H

Value after reset: $0000\ 0000_H$ This register is initialized by various types of reset.

Bit	31	30	29	28	27	26	25	24	23	22	21	20	19	18	17	16
	—	—	—	—	—	—	—	—	—	—	—	—	—	—	—	—
Value after reset	0	0	0	0	0	0	0	0	0	0	0	0	0	0	0	0
R/W	R	R	R	R	R	R	R	R	R	R	R	R	R	R	R	R

Bit	15	14	13	12	11	10	9	8	7	6	5	4	3	2	1	0
	—	—	—	—	—	SEIE	SMIE	SCIE	NRIE	CVIE	CLIE	FNIE	FEIE	FMIE	FCIE	FRIE
Value after reset	0	0	0	0	0	0	0	0	0	0	0	0	0	0	0	0
R/W	R	R	R	R	R	R/W	R/W	R/W	R/W	R/W	R/W	R/W	R/W	R/W	R/W	R/W

Table 19.13 RSENTnIDE Register Contents

Bit Position	Bit Name	Function
31 to 11	Reserved	When read, the value after reset is read. When writing, write the value after reset.
10	SEIE	Slow Channel Encoding Error Interrupt Enable 0: Interrupt disabled 1: Interrupt enabled
9	SMIE	Slow Channel Message Lost Interrupt Enable 0: Interrupt disabled 1: Interrupt enabled
8	SCIE	Slow Channel CRC Error Interrupt Enable 0: Interrupt disabled 1: Interrupt enabled
7	NRIE	No Response Error Interrupt Enable 0: Interrupt disabled 1: Interrupt enabled
6	CVIE	Calibration Pulse Length Variation Error Interrupt Enable 0: Interrupt disabled 1: Interrupt enabled
5	CLIE	Calibration Pulse Length Error Interrupt Enable 0: Interrupt disabled 1: Interrupt enabled
4	FNIE	Fast Channel Nibble Count Error Interrupt Enable 0: Interrupt disabled 1: Interrupt enabled
3	FEIE	Fast Channel Nibble Encoding Error Interrupt Enable 0: Interrupt disabled 1: Interrupt enabled
2	FMIE	Fast Channel Message Lost Interrupt Enable 0: Interrupt disabled 1: Interrupt enabled
1	FCIE	Fast Channel CRC Error Interrupt Enable 0: Interrupt disabled 1: Interrupt enabled
0	FRIE	Fast Channel Receive Interrupt Enable 0: Interrupt disabled 1: Interrupt enabled

RSENTnIDE.SEIE (Slow Channel Encoding Error Interrupt Enable)

This bit enables the generation of the slow channel encoding error interrupt.

The CPU cannot write to this bit if the RSENT module is in the RESET mode (the RSENTnMST.OMS bits are 000_B).

RSENTnIDE.SMIE (Slow Channel Message Lost Interrupt Enable)

This bit enables the generation of the slow channel message lost interrupt.

The CPU cannot write to this bit if the RSENT module is in the RESET mode (the RSENTnMST.OMS bits are 000_B).

RSENTnIDE.SCIE (Slow Channel CRC Error Interrupt Enable)

This bit enables the generation of the slow channel CRC error interrupt.

The CPU cannot write to this bit if the RSENT module is in the RESET mode (the RSENTnMST.OMS bits are 000_B).

RSENTnIDE.NRIE (No Response Error Interrupt Enable)

This bit enables the generation of the no response error interrupt.

The CPU cannot write to this bit if the RSENT module is in the RESET mode (the RSENTnMST.OMS bits are 000_B).

The CPU should not set this bit when the SPC mode is disabled (RSENTnCC.SPCE set to 0).

RSENTnIDE.CVIE (Calibration Pulse Length Variation Error Interrupt Enable)

This bit enables the generation of the calibration pulse length variation error interrupt.

The CPU cannot write to this bit if the RSENT module is in the RESET mode (the RSENTnMST.OMS bits are 000_B).

RSENTnIDE.CLIE (Calibration Pulse Length Error Interrupt Enable)

This bit enables the generation of the calibration pulse length error interrupt.

The CPU cannot write to this bit if the RSENT module is in the RESET mode (the RSENTnMST.OMS bits are 000_B).

RSENTnIDE.FNIE (Fast Channel Nibble Count Error Interrupt Enable)

This bit enables the generation of the fast channel nibble count error interrupt.

The CPU cannot write to this bit if the RSENT module is in the RESET mode (the RSENTnMST.OMS bits are 000_B).

RSENTnIDE.FEIE (Fast Channel Nibble Encoding Error Interrupt Enable)

This bit enables the generation of the fast channel nibble encoding error interrupt.

The CPU cannot write to this bit if the RSENT module is in the RESET mode (the RSENTnMST.OMS bits are 000_B).

RSENTnIDE.FMIE (Fast Channel Message Lost Interrupt Enable)

This bit enables the generation of the fast channel message lost interrupt.

The CPU cannot write to this bit if the RSENT module is in the RESET mode (the RSENTnMST.OMS bits are 000_B).

RSENTnIDE.FCIE (Fast Channel CRC Error Interrupt Enable)

This bit enables the generation of the fast channel CRC error interrupt.

The CPU cannot write to this bit if the RSENT module is in the RESET mode (the RSENTnMST.OMS bits are 000_B).

RSENTnIDE.FRIE (Fast Channel Receive Interrupt Enable)

This bit enables the generation of the fast channel receive interrupt.

The fast channel receive interrupt can be also used to notify a DMA request.

The CPU cannot write to this bit if the RSENT module is in the RESET mode (the RSENTnMST.OMS bits are 000_B).

19.3.6 RSENTnMDC — RSENT Mode Control Register

Access: This register can be read/written in 32-bit units.

Address: <RSENTn_base> + $001C_H$

Value after reset: $0000\ 0000_H$ This register is initialized by various types of reset.

Bit	31	30	29	28	27	26	25	24	23	22	21	20	19	18	17	16
	—	—	—	—	—	—	—	—	—	—	—	—	—	—	—	—
Value after reset	0	0	0	0	0	0	0	0	0	0	0	0	0	0	0	0
R/W	R	R	R	R	R	R	R	R	R	R	R	R	R	R	R	R

Bit	15	14	13	12	11	10	9	8	7	6	5	4	3	2	1	0
	—	—	—	—	—	—	—	—	—	—	—	—	—	OMC[2:0]		
Value after reset	0	0	0	0	0	0	0	0	0	0	0	0	0	0	0	0
R/W	R	R	R	R	R	R	R	R	R	R	R	R	R	R/W	R/W	R/W

Table 19.14 RSENTnMDC Register Contents

Bit Position	Bit Name	Function
31 to 3	Reserved	When read, the value after reset is read. When writing, write the value after reset.
2 to 0	OMC[2:0]	Operation Mode Control 000_B: RESET 001_B: CONFIGURATION 011_B: OPERATION IDLE 101_B: OPERATION ACTIVE Other than above: Setting prohibited

RSENTnMDC.OMC (Operation Mode Control)

These bits are used to control the operation mode of the RSENT module.

- 000_B: RESET

  In RESET mode, the mode can only be changed to CONFIGURATION mode.

- 001_B: CONFIGURATION

  In CONFIGURATION mode, the mode can only be changed to RESET mode or OPERATION ACTIVE mode.

- 011_B: OPERATION IDLE

  In OPERATION IDLE mode, the mode can be changed to OPERATION ACTIVE mode, CONFIGURATION mode, or RESET mode.

- 101_B: OPERATION ACTIVE

  In OPERATION ACTIVE mode, the mode can be changed to OPERATION IDLE mode, CONFIGURATION mode, or RESET mode. However, it is recommended to process to the OPERATION IDLE mode first.

  For the recommended methods to change between operation modes, see **Section 19.6.1, Changing Operation Modes**.

- Other than above: Setting prohibited

  The CPU should not write any other value than listed above into this register.
  The CPU should follow the mode change flows as shown in section **Section 19.6.1, Changing Operation Modes**.

19.3.7 RSENTnSPCT — RSENT SPC Transmission Register

Access: This register can be read/written in 32-bit units.

Address: <RSENTn_base> + 0020_H

Value after reset: $0000\ 0000_H$ This register is initialized by various types of reset.

Bit	31	30	29	28	27	26	25	24	23	22	21	20	19	18	17	16
	—	—	—	—	—	—	—	—	—	—	—	—	—	—	—	—
Value after reset	0	0	0	0	0	0	0	0	0	0	0	0	0	0	0	0
R/W	R	R	R	R	R	R	R	R	R	R	R	R	R	R	R	R

Bit	15	14	13	12	11	10	9	8	7	6	5	4	3	2	1	0
	—	—	—	—	—	—	—	—	—	TLL[6:0]						
Value after reset	0	0	0	0	0	0	0	0	0	0	0	0	0	0	0	0
R/W	R	R	R	R	R	R	R	R	R	R/W	R/W	R/W	R/W	R/W	R/W	R/W

Table 19.15 RSENTnSPCT Register Contents

Bit Position	Bit Name	Function
31 to 7	Reserved	When read, the value after reset is read. When writing, write the value after reset.
6 to 0	TLL[6:0]	Length of the Trigger Low Phase in Ticks 0000000_B: 1 tick 0000001_B: 2 ticks 0000010_B: 3 ticks : 1111110_B: 127 ticks 1111111_B: 128 ticks

RSENTnSPCT.TLL (Trigger Low Length)

These bits define the length of the SPC trigger pulse.

When the CPU writes to these bits, an SPC trigger pulse with the configured length is sent immediately independently of the current status of the RSENT module.

For details about SPC communication, see **Section 19.7, SPC Function**.

The CPU can only write to these bits if the RSENT module is in the OPERATION ACTIVE mode (the RSENTnMST.OMS bits are 101_B) and SPC communication is enabled (RSENTnCC.SPCE is 1).

It is important to note that two consecutive write access might not cause a no response error as the previous request might not have started yet.

After writing to this register, the CPU should wait for at least one SPC trigger tick before writing again to this register.

19.3.8 RSENTnMST — RSENT Mode Status Register

Access: This register is read-only in 32-bit units.

Address: <RSENTn_base> + 0024_H

Value after reset: $0000\ 0000_H$ This register is initialized by various types of reset.

Bit	31	30	29	28	27	26	25	24	23	22	21	20	19	18	17	16
	—	—	—	—	—	—	—	—	—	—	—	—	—	—	—	—
Value after reset	0	0	0	0	0	0	0	0	0	0	0	0	0	0	0	0
R/W	R	R	R	R	R	R	R	R	R	R	R	R	R	R	R	R

Bit	15	14	13	12	11	10	9	8	7	6	5	4	3	2	1	0
	—	—	—	—	—	—	—	—	—	—	—	—	—	OMS[2:0]		
Value after reset	0	0	0	0	0	0	0	0	0	0	0	0	0	0	0	0
R/W	R	R	R	R	R	R	R	R	R	R	R	R	R	R	R	R

Table 19.16 RSENTnMST Register Contents

Bit Position	Bit Name	Function
31 to 3	Reserved	When read, the value after reset is read.
2 to 0	OMS[2:0]	Operation Mode 000_B: RESET 001_B: CONFIGURATION 011_B: OPERATION IDLE 101_B: OPERATION ACTIVE Other than above: Reserved

RSENTnMST.OMS (Operation Mode Status)

These bits indicate the current operation mode.

These bits are read only.

These bits are updated after a mode change request is made in the RSENTnMDC.OMC register.

- 000_B: RESET mode

  When in RESET mode, all registers are set to their reset values and write access to all registers except the RSENTnMDC register is disabled.
  When in RESET mode, RSENT communication is disabled.

- 001_B: CONFIGURATION mode

  When in CONFIGURATION mode, write access to the timestamp registers (RSENTnTSPC and RSENTnTSC register), configuration registers (RSENTnCC and RSENTnBRP register), RSENTnIDE register, and mode control register (RSENTnMDC.OMC) is enabled.
  When in CONFIGURATION mode, RSENT communication is disabled.
  When entering CONFIGURATION mode, all status registers and receive buffer registers are set to their reset values.

- 011_B: OPERATION IDLE mode

  In OPERATION IDLE mode, no reception or SPC trigger transmission is possible.
  When entering OPERATION IDLE mode, frames in the receive buffer can be analyzed as in OPERATION ACTIVE mode, but no new frames are received.

- 101_B: OPERATION ACTIVE mode

  In OPERATION ACTIVE mode, reception and SPC trigger transmission are possible.

- Other than above: Reserved

19.3.9 RSENTnCS — RSENT Communication Status Register

Access: This register is read-only in 32-bit units.

Address: <RSENTn_base> + 0028_H

Value after reset: $0000\ 0000_H$ This register is initialized by various types of reset.

Bit	31	30	29	28	27	26	25	24	23	22	21	20	19	18	17	16
	—	—	—	—	—	—	—	—	—	—	—	—	—	—	—	—
Value after reset	0	0	0	0	0	0	0	0	0	0	0	0	0	0	0	0
R/W	R	R	R	R	R	R	R	R	R	R	R	R	R	R	R	R

Bit	15	14	13	12	11	10	9	8	7	6	5	4	3	2	1	0
	—	—	—	—	—	SES	SMS	SCS	NRS	CVS	CLS	FNS	FES	FMS	FCS	FRS
Value after reset	0	0	0	0	0	0	0	0	0	0	0	0	0	0	0	0
R/W	R	R	R	R	R	R	R	R	R	R	R	R	R	R	R	R

Table 19.17 RSENTnCS Register Contents

Bit Position	Bit Name	Function
31 to 11	Reserved	When read, the value after reset is read.
10	SES	Slow channel Encoding Error Interrupt Detection 0: Not detected 1: Detected
9	SMS	Slow Channel Message Lost Interrupt Detection 0: Not detected 1: Detected
8	SCS	Slow Channel CRC Error Interrupt Detection 0: Not detected 1: Detected
7	NRS	No Response Error Interrupt Detection 0: Not detected 1: Detected
6	CVS	Calibration Pulse Length Variation Error Interrupt Detection 0: Not detected 1: Detected
5	CLS	Calibration Pulse Length Error Interrupt Detection 0: Not detected 1: Detected
4	FNS	Fast Channel Nibble Count Error Interrupt Detection 0: Not detected 1: Detected
3	FES	Fast Channel Nibble Encoding Error Interrupt Detection 0: Not detected 1: Detected
2	FMS	Fast Channel Message Lost Interrupt Detection 0: Not detected 1: Detected
1	FCS	Fast Channel CRC Error Interrupt Detection 0: Not detected 1: Detected
0	FRS	Fast Channel Receive Interrupt Detection 0: Not detected 1: Detected

RSENTnCS.SES (Slow Channel Encoding Error Status)

This bit represents the slow channel encoding error status.

This bit is read only.

In the short serial message format (RSENTnCC.SMF = 01_B), this bit is set when the sequence on serial start bit (status and communications nibble bit #3) is different from "1000 0000 0000 0000_B" (a single 1 and 15 0s).

In the enhanced serial message format (RSENTnCC.SMF = 10_B), this bit is set after receiving the serial message start frame (sequence on status and communications nibble bit 3 is 0111 1110_B), and if bit 13 or bit 18 are not received as '0'.

When this bit is set in the short serial message format the received communication and status nibble is used to assemble a serial message.

When this bit is set in the enhanced serial message format the RSENT module checks the presence of a new start sequence at the same time and uses the received communication and status nibble to assemble a serial message.

This bit is cleared when writing 1 to RSENTnCSC.SEC.

This bit is cleared when the RSENTnMST.OMS bits are changed to 001_B (CONFIGURATION).

If the set condition occurs simultaneously with the clear condition, the bit is set.

RSENTnCS.SMS (Slow Channel Message Lost Status)

This bit represents the slow channel message lost status.

This bit is read only.

This bit is set when there is an attempt to update the slow channel message reception buffer, but the previous message has not been read yet.

This bit is cleared when writing 1 to RSENTnCSC.SEC.

This bit is cleared when the RSENTnMST.OMS bits are changed to 001_B (CONFIGURATION).

If the set condition occurs simultaneously with the clear condition, the bit is set.

RSENTnCS.SCS (Slow Channel CRC Error Status)

This bit represents the slow channel CRC error status.

This bit is read only.

This bit is set when a CRC error is detected on the slow channel and the slow channel CRC detection is enabled (RSENTnCC.SCCD is set to 0).

This bit is cleared when writing 1 to RSENTnCSC.SCC.

This bit is cleared when the RSENTnMST.OMS bits are changed to 001_B (CONFIGURATION).

If the set condition occurs simultaneously with the clear condition, the bit is set.

RSENTnCS.NRS (No Response Error Status)

This bit represents the no response error status.

This bit is read only.

This bit is set when

- the CPU writes to the RSENTnSPCT.TLL bits and

- SPC mode enabled (RSENTnCC.SPCE set to 1) and
- no complete response was received from the sensor for the previous SPC trigger.

This bit is cleared when writing 1 to RSENTnCSC.NRC.

This bit is cleared when the RSENTnMST.OMS bits are changed to 001 (CONFIGURATION).

If the set condition occurs simultaneously with the clear condition, the bit is set.

RSENTnCS.CVS (Calibration Pulse Length Variation Error Status)

This bit represents the calibration pulse length variation error status.

This bit is read only.

When RSENTnCC.PPTC is 0, then this bit is set when two successive calibration pulses differ by more than 1.5625%.

When RSENTnCC.PPTC is 1, this bit is never set. In this mode (pause pulse with fixed message length), the CPU needs to check the variation of the ratio of calibration pulse to message length by reading the RSENTnCPL and RSENTnML registers.

This bit is cleared when writing 1 to RSENTnCSC.CVC.

This bit is cleared when the RSENTnMST.OMS bits are changed to 001_B (CONFIGURATION).

If the set condition occurs simultaneously with the clear condition, the bit is set.

RSENTnCS.CLS (Calibration Pulse Length Error Status)

This bit represents the calibration pulse length error status.

This bit is read only.

This bit is set when the measured calibration pulse length is less than 42 clock ticks or more than 70 clock ticks (deviation of 25% from specification length (56 clock ticks)).

This bit is cleared when writing 1 to RSENTnCSC.CLC.

This bit is cleared when the RSENTnMST.OMS bits are changed to 001_B (CONFIGURATION).

If the set condition occurs simultaneously with the clear condition, the bit is set.

RSENTnCS.FNS (Fast Channel Nibble Count Error Status)

This bit represents the fast channel nibble count error status.

This bit is read only.

This bit is set when there is an unexpected number of falling edges between two calibration pulses.

This bit is cleared when writing 1 to RSENTnCSC.FNC.

This bit is cleared when the RSENTnMST.OMS bits are changed to 001_B (CONFIGURATION).

If the set condition occurs simultaneously with the clear condition, the bit is set.

RSENTnCS.FES (Fast Channel Nibble Encoding Error Status)

This bit represents the fast channel nibble encoding error status.

This bit is read only.

This bit is set when on the fast channel a measured nibble period is less than 12 clock ticks or more than 27 clock ticks.

This bit is cleared when writing 1 to RSENTnCSC.FEC.

This bit is cleared when the RSENTnMST.OMS bits are changed to 001_B (CONFIGURATION).

If the set condition occurs simultaneously with the clear condition, the bit is set.

RSENTnCS.FMS (Fast Channel Message Lost Status)

This bit represents the fast channel message lost status.

This bit is read only.

This bit is set when the fast channel message reception buffer is updated, but the previous messages have not been read yet.

This bit is cleared when writing 1 to RSENTnCSC.FMC.

This bit is cleared when the RSENTnMST.OMS bits are changed to 001_B (CONFIGURATION).

If the set condition occurs simultaneously with the clear condition, the bit is set.

RSENTnCS.FCS (Fast Channel CRC Error Status)

This bit represents the fast channel CRC error status.

This bit is read only.

This bit is set when a CRC error is detected on the fast channel and the fast channel CRC detection is enabled (RSENTnCC.FCCD is set to 0).

This bit is cleared when writing 1 to RSENTnCSC.FCC.

This bit is cleared when the RSENTnMST.OMS bits are changed to 001_B (CONFIGURATION).

If the set condition occurs simultaneously with the clear condition, the bit is set.

RSENTnCS.FRS (Fast Channel Receive Status)

This bit represents the fast channel receive status.

This bit is read only.

This bit is set when the fast channel message reception buffer was updated.

This bit is cleared when the CPU reads the RSENTnFRXD.FND bit.

This bit is cleared when the RSENTnMST.OMS bits are changed to 001_B (CONFIGURATION).

If the set condition occurs simultaneously with the clear condition, the bit is set.

19.3.10 RSENTnCSC — RSENT Communication Status Clear Register

Access: This register can be read/written in 32-bit units.

Address: <RSENTn_base> + $002C_H$

Value after reset: $0000\ 0000_H$ This register is initialized by various types of reset.

Bit	31	30	29	28	27	26	25	24	23	22	21	20	19	18	17	16
	—	—	—	—	—	—	—	—	—	—	—	—	—	—	—	—
Value after reset	0	0	0	0	0	0	0	0	0	0	0	0	0	0	0	0
R/W	R	R	R	R	R	R	R	R	R	R	R	R	R	R	R	R

Bit	15	14	13	12	11	10	9	8	7	6	5	4	3	2	1	0
	—	—	—	—	—	SEC	SMC	SCC	NRC	CVC	CLC	FNC	FEC	FMC	FCC	—
Value after reset	0	0	0	0	0	0	0	0	0	0	0	0	0	0	0	0
R/W	R	R	R	R	R	R/W	R/W	R/W	R/W	R/W	R/W	R/W	R/W	R/W	R/W	R

Table 19.18 RSENTnCSC Register Contents

Bit Position	Bit Name	Function
31 to 11	Reserved	When read, the value after reset is read. When writing, write the value after reset.
10	SEC	Slow Channel Encoding Error Interrupt Clear 0: — 1: Clear
9	SMC	Slow Channel Message Lost Interrupt Clear 0:— 1: Clear
8	SCC	Slow Channel CRC Error Interrupt Clear 0: — 1: Clear
7	NRC	No Response Error Interrupt Clear 0: — 1: Clear
6	CVC	Calibration Pulse Length Variation Error Interrupt Clear 0: — 1: Clear
5	CLC	Calibration Pulse Length Error Interrupt Clear 0: — 1: Clear
4	FNC	Fast Channel Nibble Count Error Interrupt Clear 0: — 1: Clear
3	FEC	Fast Channel Nibble Encoding Error Interrupt Clear 0: — 1: Clear
2	FMC	Fast Channel Message Lost Interrupt Clear 0: — 1: Clear
1	FCC	Fast Channel CRC Error Interrupt Clear 0: — 1: Clear
0	Reserved	When read, the value after reset is read. When writing, write the value after reset.

RSENTnCSC.SEC (Slow Channel Encoding Error Clear)

Writing 1 sets RSENTnCS.SES to 0.

Writing 0 has no effect.

This bit is always read as 0.

RSENTnCSC.SMC (Slow Channel Message Lost Clear)

Writing 1 sets RSENTnCS.SMS to 0.

Writing 0 has no effect.

This bit is always read as 0.

RSENTnCSC.SCC (Slow Channel CRC Error Clear)

Writing 1 sets RSENTnCS.SCS to 0.

Writing 0 has no effect.

This bit is always read as 0.

RSENTnCSC.NRC (No Response Error Clear)

Writing 1 sets RSENTnCS.NRS to 0.

Writing 0 has no effect.

This bit is always read as 0.

RSENTnCSC.CVC (Calibration Pulse Length Variation Error Clear)

Writing 1 sets RSENTnCS.CVS to 0.

Writing 0 has no effect.

This bit is always read as 0.

RSENTnCSC.CLC (Calibration Pulse Length Error Clear)

Writing 1 sets RSENTnCS.CLS to 0.

Writing 0 has no effect.

This bit is always read as 0.

RSENTnCSC.FNC (Fast Channel Nibble Count Error Clear)

Writing 1 sets RSENTnCS.FNS to 0.

Writing 0 has no effect.

This bit is always read as 0.

RSENTnCSC.FEC (Fast Channel Nibble Encoding Error Clear)

Writing 1 sets RSENTnCS.FES to 0.

Writing 0 has no effect.

This bit is always read as 0.

RSENTnCSC.FMC (Fast Channel Message Lost Clear)

Writing 1 sets RSENTnCS.FMS to 0.

Writing 0 has no effect.

This bit is always read as 0.

RSENTnCSC.FCC (Fast Channel CRC Error Clear)

Writing 1 sets RSENTnCS.FCS to 0.

Writing 0 has no effect.

This bit is always read as 0.

19.3.11 RSENTnSRTS — RSENT Slow Channel Receive Timestamp Register

Access: This register is read-only in 32-bit units.

Address: <RSENTn_base> + 0030_H

Value after reset: $0000\ 0000_H$ This register is initialized by various types of reset.

Bit	31	30	29	28	27	26	25	24	23	22	21	20	19	18	17	16
	STS[31:16]															
Value after reset	0	0	0	0	0	0	0	0	0	0	0	0	0	0	0	0
R/W	R	R	R	R	R	R	R	R	R	R	R	R	R	R	R	R

Bit	15	14	13	12	11	10	9	8	7	6	5	4	3	2	1	0
	STS[15:0]															
Value after reset	0	0	0	0	0	0	0	0	0	0	0	0	0	0	0	0
R/W	R	R	R	R	R	R	R	R	R	R	R	R	R	R	R	R

Table 19.19 RSENTnSRTS Register Contents

Bit Position	Bit Name	Function
31 to 0	STS	Slow Channel Receive Timestamp

RSENTnSRTS.STS (Slow Channel Receive Timestamp)

These bits are read only.

These bits are updated when the slow channel message reception buffer is updated with the timestamp counter value of the last frame provided to the slow channel message.

These bits are cleared when the RSENTnMST.OMS bits are changed to 001_B (CONFIGURATION).

19.3.12 RSENTnSRXD — RSENT Slow Channel Receive Data Register

Access: This register is read-only in 32-bit units.

Address: <RSENTn_base> + 0034_H

Value after reset: $0000\ 0000_H$ This register is initialized by various types of reset.

Bit	31	30	29	28	27	26	25	24	23	22	21	20	19	18	17	16
	SND	—	SCRC[5:0]						—	—	—	SMGC	IDD[19:16]			
Value after reset	0	0	0	0	0	0	0	0	0	0	0	0	0	0	0	0
R/W	R	R	R	R	R	R	R	R	R	R	R	R	R	R	R	R

Bit	15	14	13	12	11	10	9	8	7	6	5	4	3	2	1	0
	IDD[15:0]															
Value after reset	0	0	0	0	0	0	0	0	0	0	0	0	0	0	0	0
R/W	R	R	R	R	R	R	R	R	R	R	R	R	R	R	R	R

Table 19.20 RSENTnSRXD Register Contents

Bit Position	Bit Name	Function
31	SND	Slow Channel New Data 0: Slow channel frame data is not updated since last read. 1: Slow channel frame data is updated since last read.
30	Reserved	When read, the value after reset is read.
29 to 24	SCRC[5:0]	Slow Channel CRC Data
23 to 21	Reserved	When read, the value after reset is read.
20	SMGC	Slow Channel Configuration Bit Data
19 to 0	IDD[19:0]	Slow Channel Data / ID Information

RSENTnSRXD.SND (Slow Channel New Data)

This bit indicates that the slow channel message reception buffer is holding data that has not been read.

This bit is read only.

This bit is set when the slow channel message reception buffer is updated.

This bit is cleared automatically whenever it is read.

This bit is cleared when the RSENTnMST.OMS bits are changed to 001_B (CONFIGURATION).

RSENTnSRXD.SCRC (Slow Channel CRC)

These bits are representing the slow channel CRC data.

These bits are read only.

These bits are updated when the slow channel message reception buffer is updated.

These bits are cleared when the RSENTnMST.OMS bits are changed to 001_B (CONFIGURATION).

RSENTnSRXD.SMGC (Slow Channel Configuration Bit)

This bit represents the slow channel configuration bit data.

This bit is read only.

This bit is updated when the slow channel message reception buffer is updated.

This bit is cleared when the RSENTnMST.OMS bits are changed to 001_B (CONFIGURATION).

RSENTnSRXD.IDD (ID/ Data)

These bits are representing the slow channel data and ID information.

The alignment within this register depends on the message format. For details, see **Section 19.6.2.5, Slow Channel Message Reception**.

These bits are read only.

These bits are updated when the slow channel message reception buffer is updated.

These bits are cleared when the RSENTnMST.OMS bits are changed to 001_B (CONFIGURATION).

19.3.13 RSENTnCPL — RSENT Calibration Pulse Length Register

Access: This register is read-only in 32-bit units.

Address: <RSENTn_base> + 0038_H

Value after reset: $0000\ 0000_H$ This register is initialized by various types of reset.

Bit	31	30	29	28	27	26	25	24	23	22	21	20	19	18	17	16
	—	—	—	—	—	—	—	—	—	—	—	—	—	—	—	CPLV [16]
Value after reset	0	0	0	0	0	0	0	0	0	0	0	0	0	0	0	0
R/W	R	R	R	R	R	R	R	R	R	R	R	R	R	R	R	R

Bit	15	14	13	12	11	10	9	8	7	6	5	4	3	2	1	0
	CPLV[15:0]															
Value after reset	0	0	0	0	0	0	0	0	0	0	0	0	0	0	0	0
R/W	R	R	R	R	R	R	R	R	R	R	R	R	R	R	R	R

Table 19.21 RSENTnCPL Register Contents

Bit Position	Bit Name	Function
31 to 17	Reserved	When read, the value after reset is read.
16 to 0	CPLV[16:0]	Calibration pulse length value of received message

RSENTnCPL.CPLV (Calibration Pulse Length Value)

These bits are used by the CPU to calculate the ratio of two consecutive calibration pulses or the calibration pulse to message length in pause pulse with fixed message length mode for message diagnostics.

These bits are read only.

Updating of the fast channel message reception buffer is storage of the value counted over the calibration pulse length (one tick time × the number of ticks between calibration pulses) based on the sample clock (f_{SAMPLE} = 16 MHz).

These bits are cleared when the RSENTnMST.OMS bits are changed to 001_B (CONFIGURATION).

19.3.14 RSENTnML — RSENT Message Length Register

Access: This register is read-only in 32-bit units.

Address: <RSENTn_base> + $003C_H$

Value after reset: $0000\ 0000_H$ This register is initialized by various types of reset.

Bit	31	30	29	28	27	26	25	24	23	22	21	20	19	18	17	16
	—	—	—	—	—	—	—	—	—	—	—	MLV[20:16]				
Value after reset	0	0	0	0	0	0	0	0	0	0	0	0	0	0	0	0
R/W	R	R	R	R	R	R	R	R	R	R	R	R	R	R	R	R

Bit	15	14	13	12	11	10	9	8	7	6	5	4	3	2	1	0
	MLV[15:0]															
Value after reset	0	0	0	0	0	0	0	0	0	0	0	0	0	0	0	0
R/W	R	R	R	R	R	R	R	R	R	R	R	R	R	R	R	R

Table 19.22 RSENTnML Register Contents

Bit Position	Bit Name	Function
31 to 21	Reserved	When read, the value after reset is read.
20 to 0	MLV[20:0]	Message length of received message

RSENTnML.MLV (Message Length Value)

These bits are used by the CPU to calculate the ratio of the calibration pulse to message length in pause pulse with fixed message length mode for message diagnostics.

These bits are read only.

Updating of the fast channel message reception buffer is storage of the value counted over the message length (one tick time × the number of ticks taken to receive the overall message) based on the sample clock (f_{SAMPLE} = 16 MHz).

These bits are cleared when the RSENTnMST.OMS bits are changed to 001_B (CONFIGURATION).

19.3.15 RSENTnFRTS — RSENT Fast Channel Receive Timestamp Register

Access: This register is read-only in 32-bit units.

Address: <RSENTn_base> + 0040_H

Value after reset: $0000\ 0000_H$ This register is initialized by various types of reset.

Bit	31	30	29	28	27	26	25	24	23	22	21	20	19	18	17	16
	FTS[31:16]															
Value after reset	0	0	0	0	0	0	0	0	0	0	0	0	0	0	0	0
R/W	R	R	R	R	R	R	R	R	R	R	R	R	R	R	R	R

Bit	15	14	13	12	11	10	9	8	7	6	5	4	3	2	1	0
	FTS[15:0]															
Value after reset	0	0	0	0	0	0	0	0	0	0	0	0	0	0	0	0
R/W	R	R	R	R	R	R	R	R	R	R	R	R	R	R	R	R

Table 19.23 RSENTnFRTS Register Contents

Bit Position	Bit Name	Function
31 to 0	FTS[31:0]	Fast Channel Receive Timestamp

RSENTnFRTS.FTS (Fast Channel Receive Timestamp)

These bits are read only.

These bits are updated when the fast channel message reception buffer is updated.

These bits are cleared when the RSENTnMST.OMS bits are changed to 001_B (CONFIGURATION).

19.3.16 RSENTnFRXD — RSENT Fast Channel Receive Data Register

Access: This register is read-only in 32-bit units.

Address: <RSENTn_base> + 0044_H

Value after reset: $0000\ 0000_H$ This register is initialized by various types of reset.

Bit	31	30	29	28	27	26	25	24	23	22	21	20	19	18	17	16
	SNDM	FND	FCCN[1:0]		FCRC[3:0]				ND[23:16]							
Value after reset	0	0	0	0	0	0	0	0	0	0	0	0	0	0	0	0
R/W	R	R	R	R	R	R	R	R	R	R	R	R	R	R	R	R

Bit	15	14	13	12	11	10	9	8	7	6	5	4	3	2	1	0
	ND[15:0]															
Value after reset	0	0	0	0	0	0	0	0	0	0	0	0	0	0	0	0
R/W	R	R	R	R	R	R	R	R	R	R	R	R	R	R	R	R

Table 19.24 RSENTnFRXD Register Contents

Bit Position	Bit Name	Function
31	SNDM	Slow Channel New Data Mirror 0: Slow channel frame data is not updated since last read. 1: Slow channel frame data is updated since last read.
30	FND	Fast Channel New Data 0: Fast channel frame data is not updated since last read. 1: Fast channel frame data is updated since last read.
29, 28	FCCN[1:0]	Fast Channel Status and Communications Nibble[1:0]
27 to 24	FCRC[3:0]	Fast Channel CRC Data
23 to 0	ND[23:0]	Fast Channel Nibble Data

RSENTnFRXD.SNDM (Slow Channel New Data Mirror)

This bit indicates that the slow channel message reception buffer is holding data that has not been read.

This bit is read only.

This bit is set when the slow channel message reception buffer is updated.

This bit is cleared automatically whenever the slow channel new data bit (RSENTnSRXD.SND) is read.

This bit is cleared when the RSENTnMST.OMS bits are changed to 001_B (CONFIGURATION).

RSENTnFRXD.FND (Fast Channel New Data)

This bit indicates that the fast channel message reception buffer is holding data that has not been read.

This bit is read only.

This bit is set when the fast channel message reception buffer is updated.

This bit is cleared automatically whenever it is read.

This bit is cleared when the RSENTnMST.OMS bits are changed to 001_B (CONFIGURATION).

RSENTnFRXD.FCCN (Fast Channel Status and Communications Nibble)

These bits are representing the fast channel status and communications nibble bits [1:0].

These bits are read only.

These bits are updated when the fast channel message reception buffer is updated.

These bits are cleared when the RSENTnMST.OMS bits are changed to 001_B (CONFIGURATION).

RSENTnFRXD.FCRC (Fast Channel CRC)

These bits are representing the fast channel CRC data.

These bits are read only.

These bits are updated when the fast channel message reception buffer is updated.

These bits are cleared when the RSENTnMST.OMS bits are changed to 001_B (CONFIGURATION).

RSENTnFRXD.ND (Fast Channel Nibble Data)

These bits are representing the fast channel nibble data.

The alignment of the nibble data depends on nibble data count (RSENTnCC.NDN). For details, see **Section 19.6.2.3, Fast Channel Message Reception**.

These bits are read only.

These bits are updated when the fast channel message reception buffer is updated.

These bits are cleared when the RSENTnMST.OMS bits are changed to 001_B (CONFIGURATION).

19.3.17 RSENTTSSEL — RSENT Timestamp Mode Selection Register

This register controls the master channel of the RSENT timestamp.

Set this register when the RSENT module is stopped (RSENTnMST.OMS = 000_B).

Timestamp in each RSESNT channel can be synchronized with other timestamp in other channel. A timestamp clear signal in each channel can clear other timestamp.

Access: This register can be read/written in 32-bit units.

Address: <RSENT0_base> +$A000_H$

Value after reset: $0000\ 0000_H$ This register is initialized by various types of reset.

Bit	31	30	29	28	27	26	25	24	23	22	21	20	19	18	17	16
	—	—	—	—	—	—	—	—	—	MSSEL 52	MSSEL 51	MSSEL 50	—	MSSEL 42	MSSEL 41	MSSEL 40
Value after reset	0	0	0	0	0	0	0	0	0	0	0	0	0	0	0	0
R/W	R	R	R	R	R	R	R	R	R	R/W	R/W	R/W	R	R/W	R/W	R/W

Bit	15	14	13	12	11	10	9	8	7	6	5	4	3	2	1	0
	—	MSSEL 32	MSSEL 31	MSSEL 30	—	MSSEL 22	MSSEL 21	MSSEL 20	—	MSSEL 12	MSSEL 11	MSSEL 10	—	MSSEL 02	MSSEL 01	MSSEL 00
Value after reset	0	0	0	0	0	0	0	0	0	0	0	0	0	0	0	0
R/W	R	R/W	R/W	R/W	R	R/W	R/W	R/W	R	R/W	R/W	R/W	R	R/W	R/W	R/W

Table 19.25 RSENTTSSEL Register Contents (1/2)

Bit Position	Bit Name	Function
31 to 23	Reserved	When read, the value after reset is read. When writing, write the value after reset.
22 to 20	MSSEL5[2:0]	RSENT5 Master Selection (when the RSENTnTSPC.TMS bit of RSENT5 = 1) 000_B: No timestamp master 001_B: RSENT0 is the timestamp master of RSENT5. 010_B: RSENT1 is the timestamp master of RSENT5. 011_B: RSENT2 is the timestamp master of RSENT5. 100_B: RSENT3 is the timestamp master of RSENT5. 101_B: RSENT4 is the timestamp master of RSENT5. 110_B: No timestamp master Other than above: Setting prohibited
19	Reserved	When read, the value after reset is read. When writing, write the value after reset.
18 to 16	MSSEL4[2:0]	RSENT4 Master Selection (when the RSENTnTSPC.TMS bit of RSENT4 = 1) 000_B: No timestamp master 001_B: RSENT0 is the timestamp master of RSENT4. 010_B: RSENT1 is the timestamp master of RSENT4. 011_B: RSENT2 is the timestamp master of RSENT4. 100_B: RSENT3 is the timestamp master of RSENT4. 101_B: No timestamp master 101_B: RSENT5 is the timestamp master of RSENT4. Other than above: Setting prohibited
15	Reserved	When read, the value after reset is read. When writing, write the value after reset.

Table 19.25 RSENTTSSEL Register Contents (2/2)

Bit Position	Bit Name	Function
14 to 12	MSSEL3[2:0]	RSENT3 Master Selection (when the RSENTnTSPC.TMS bit of RSENT3 = 1) 000_B: No timestamp master 001_B: RSENT0 is the timestamp master of RSENT3. 010_B: RSENT1 is the timestamp master of RSENT3. 011_B: RSENT2 is the timestamp master of RSENT3. 100_B: No timestamp master 101_B: RSENT4 is the timestamp master of RSENT3. 101_B: RSENT5 is the timestamp master of RSENT3. Other than above: Setting prohibited
11	Reserved	When read, the value after reset is read. When writing, write the value after reset.
10 to 8	MSSEL2[2:0]	RSENT2 Master Selection (when the RSENTnTSPC.TMS bit of RSENT2 = 1) 000_B: No timestamp master 001_B: RSENT0 is the timestamp master of RSENT2. 010_B: RSENT1 is the timestamp master of RSENT2. 011_B: No timestamp master 100_B: RSENT3 is the timestamp master of RSENT2. 101_B: RSENT4 is the timestamp master of RSENT2. 110_B: RSENT5 is the timestamp master of RSENT2. Other than above: Setting prohibited
7	Reserved	When read, the value after reset is read. When writing, write the value after reset.
6 to 4	MSSEL1[2:0]	RSENT1 Master Selection (when the RSENTnTSPC.TMS bit of RSENT1 = 1) 000_B: No timestamp master 001_B: RSENT0 is the timestamp master of RSENT1. 010_B: No timestamp master 011_B: RSENT2 is the timestamp master of RSENT1. 100_B: RSENT3 is the timestamp master of RSENT1. 101_B: RSENT4 is the timestamp master of RSENT1. 110_B: RSENT5 is the timestamp master of RSENT1. Other than above: Setting prohibited
3	Reserved	When read, the value after reset is read. When writing, write the value after reset.
2 to 0	MSSEL0[2:0]	RSENT0 Master Selection (when the RSENTnTSPC.TMS bit of RSENT0 = 1) 000_B: No timestamp master 001_B: No timestamp master 010_B: RSENT1 is the timestamp master of RSENT0. 011_B: RSENT2 is the timestamp master of RSENT0. 100_B: RSENT3 is the timestamp master of RSENT0. 101_B: RSENT4 is the timestamp master of RSENT0. 110_B: RSENT5 is the timestamp master of RSENT0. Other than above: Setting prohibited

19.4 Modes of Operation

The RSENT module can be in one of the following modes:

- RESET mode
- CONFIGURATION mode
- OPERATION IDLE mode
- OPERATION ACTIVE mode

CPU should follow the mode change flow as shown **"19.6.1 Changing Operation Modes"**. The current operation mode status can be seen in the RSENTnMST.OMS bits.

Figure 19.2 shows the possible transitions between the channel modes:

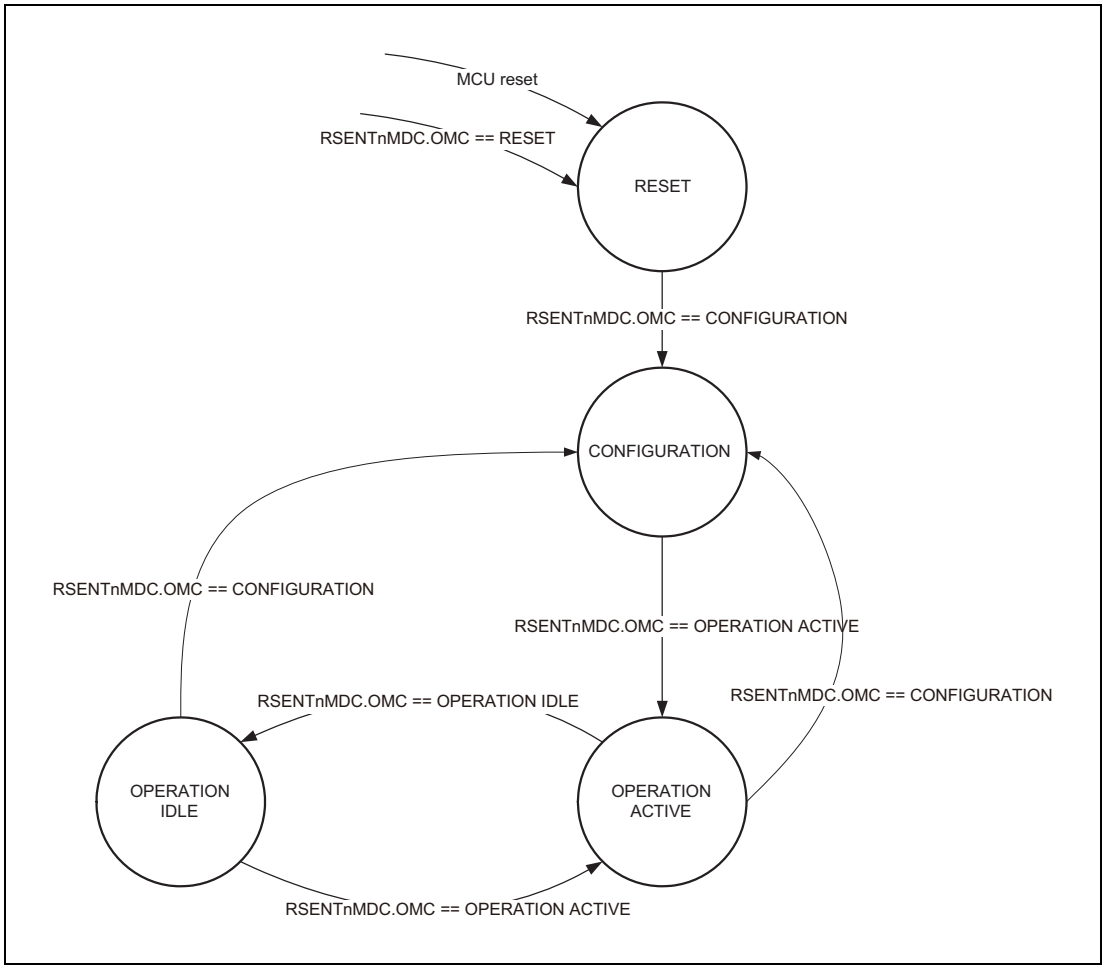

Figure 19.2 Transition between Operation Modes

19.4.1 RESET Mode

This mode is the initial mode that the RSENT module automatically enters after a reset is cleared. Its purpose is to provide a clean reset of the registers in the RSENT module.

The RESET mode is also entered after the RSENTnMDC.OMC bits have been set to 000_B. In this state, all, configuration, control (except RSENTnMDC.OMC bits and bits in the RSENTTSSEL register), and status registers are set to the value after their reset. Any on-going transmission or reception process is stopped immediately and the interface pins of the RSENT module are set to the value after their reset.

Read access to all registers is possible in this state. Write access is limited to the RSENTnMDC register and RSENTTSSEL registers.

19.4.2 CONFIGURATION Mode

The CONFIGURATION mode is entered after the RSENTnMDC.OMC bits have been set to 001_B.

The interface pins of the RSENT module are set to their default values.

Regarding the output polarity setting of RSENTnSPCO pin and the timing that becomes effective, please refer to the explanation of "RSENTnCC.SOPC (SPC Output Polarity Control)" in **Section 19.3.3, RSENTnCC — RSENT Communications Configuration Register**.

In this state, all status registers (RSENTnCS) and the receive buffer registers (RSENTnSRTS, RSENTnSRXD, RSENTnCPL, RSENTnML, RSENTnFRTS, and RSENTnFRXD) are set to the value after their reset.

Read access to all registers is possible in this state.

Write access is limited to both timestamp registers (RSENTnTSPC and RSENTnTSC) and configuration registers (RSENTnCC, RSENTnBRP, RSENTnIDE, RSENTnMDC, and RSENTnCSC).

19.4.3 OPERATION IDLE Mode

This mode is entered after the RSENTnMDC.OMC bits have been set to 011_B.

In OPERATION IDLE mode, no reception and transmission are done.

When entering OPERATION IDLE mode, frames in the receive buffer can be analyzed as in OPERATION ACTIVE mode, but no new frames are received.

Read access to all registers is possible in this state.

Write access is granted only to RSENTnTSC, RSENTnIDE, RSENTnMDC, and RSENTnCSC.

19.4.4 OPERATION ACTIVE Mode

This mode is entered after the RSENTnMDC.OMC bits have been set to 101_B.

In OPERATION ACTIVE mode, transmission and reception can take place.

Frame reception and status flagging starts after a valid calibration pulse (including the falling edge at the beginning) was detected.

Read access to all registers is possible in this state.

Write access is granted only to RSENTnTSC, RSENTnIDE, RSENTnMDC, RSENTnSPCT, and RSENTnCSC.

19.4.5 Register Behavior in Operation Modes

Table 19.26 shows the register behavior when the RSENT module transitions to the indicated operation modes. The table also gives an overview about the access restriction in each operation mode.

Table 19.26 Register Behavior in Operation Modes

Register Name	Symbol	MCU Reset	RESET		CONFIGURATION		OPERATION IDLE		OPERATION ACTIVE	
		Change	Change	R/W	Change	R/W	Change	R/W	Change	R/W
Timestamp prescaler configuration register	RSENTnTSPC	$0000\ 0000_H$	$0000\ 0000_H$	R	Unchanged	R/W	Unchanged	R	Unchanged	R
Timestamp counter register	RSENTnTSC	$0000\ 0000_H$	$0000\ 0000_H$	R	Unchanged	R/W	Unchanged	R/W *1	Unchanged	R/W *1
Communications configuration register	RSENTnCC	$0000\ 0000_H$	$0000\ 0000_H$	R	Unchanged	R/W	Unchanged	R	Unchanged	R
Baud rate prescaler register	RSENTnBRP	$0000\ 0000_H$	$0000\ 0000_H$	R	Unchanged	R/W	Unchanged	R	Unchanged	R
Interrupt/DMA enable register	RSENTnIDE	$0000\ 0000_H$	$0000\ 0000_H$	R	Unchanged	R/W	Unchanged	R/W	Unchanged	R/W
Mode control register	RSENTnMDC	$0000\ 0000_H$	$0000\ 0000_H$	R/W	Unchanged	R/W	Unchanged	R/W	Unchanged	R/W
SPC transmission register	RSENTnSPCT	$0000\ 0000_H$	$0000\ 0000_H$	R	Unchanged	R	Unchanged	R	Unchanged	R/W
Mode status register	RSENTnMST	$0000\ 0000_H$	$0000\ 0000_H$	R	$0000\ 0001_H$	R	$0000\ 0003_H$	R	$0000\ 0005_H$	R
Communication status register	RSENTnCS	$0000\ 0000_H$	$0000\ 0000_H$	R	$0000\ 0000_H$	R	Unchanged	R	Unchanged	R
Communication status clear register	RSENTnCSC	$0000\ 0000_H$	$0000\ 0000_H$	R	Unchanged	R/W	Unchanged	R/W	Unchanged	R/W
Slow channel receive timestamp register	RSENTnSRTS	$0000\ 0000_H$	$0000\ 0000_H$	R	$0000\ 0000_H$	R	Unchanged	R	Unchanged	R
Slow channel receive data register	RSENTnSRXD	$0000\ 0000_H$	$0000\ 0000_H$	R	$0000\ 0000_H$	R	Unchanged	R	Unchanged	R
Calibration pulse length register	RSENTnCPL	$0000\ 0000_H$	$0000\ 0000_H$	R	$0000\ 0000_H$	R	Unchanged	R	Unchanged	R
Message length register	RSENTnML	$0000\ 0000_H$	$0000\ 0000_H$	R	$0000\ 0000_H$	R	Unchanged	R	Unchanged	R
Fast channel receive timestamp register	RSENTnFRTS	$0000\ 0000_H$	$0000\ 0000_H$	R	$0000\ 0000_H$	R	Unchanged	R	Unchanged	R
Fast channel receive data register	RSENTnFRXD	$0000\ 0000_H$	$0000\ 0000_H$	R	$0000\ 0000_H$	R	Unchanged	R	Unchanged	R

Note 1. Means write restriction exists.

19.5 Clock Configuration

19.5.1 Timestamp

19.5.1.1 Timestamp Clock Configuration

RSENT incorporates the timestamp counter.

The user should configure the RSENTnTSPC.TTPV register according to the applied communication frequency. The resolution of the timestamp is 1 µs. The input frequency is divided by the configured timestamp prescaler value RSENTnTSPC.TTPV.

Depending on the configured tick lengths, the resolution can be decreased by configuring the RSENTnTSPC.TTM bits. The already divided input frequency is divided further by the value of the TSPC.TTM bits.

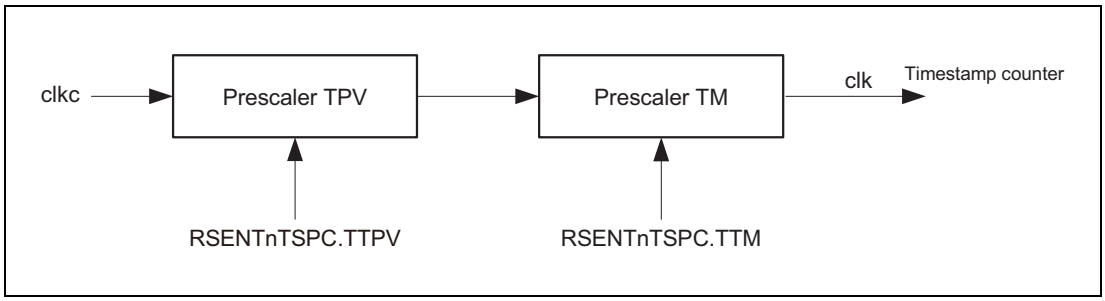

Figure 19.3 Timestamp Counter Clock Generation

19.5.1.2 Timestamp Counter Operation

The timestamp counter value can be initialized to any value by writing to the RSENTnTSC.TS bits only when the RSENT module is in CONFIGURATION mode.

When timestamp counters are configured to operate in master mode (RSENTnTSPC.TMS = 0), the CPU can reset the timestamp counter by writing $0000\ 0000_H$ to the RSENTnTSC.TS bits when the RSENT module is in OPERATION IDLE or OPERATION ACTIVE mode.

When timestamp counters are configured to operate in slave mode (RSENTnTSPC.TMS = 1), the timestamp counter is cleared when the CPU writes $0000\ 0000_H$ to the RSENTnTSC.TS bits of the channel set in the master when the RSENT module is in OPERATION IDLE or OPERATION ACTIVE mode. Make the same settings for the timestamp counter prescalers of channels operating in master mode and slave mode. When timestamp counter synchronization occurs, the internal timestamp counter prescalers are also synchronized.

The current timestamp counter value can be read from the RSENTnTSC.TS bits.

When the RSENT module is in OPERATION ACTIVE mode, each received message is stored with its related timestamp. Timestamp values are taken for fast channel and slow channel data.

The timestamp value is captured when the calibration pulse is detected.

The timestamp value for the fast channel is stored in the RSENTnFRTS.FTS bits.

The timestamp value for the slow channel is stored in the RSENTnSRTS.STS bits. The timestamp value for the slow channel is identical to the timestamp value of the last fast channel message contributing to the slow channel message.

In case timestamp counter synchronization is required, the following flow should be used.

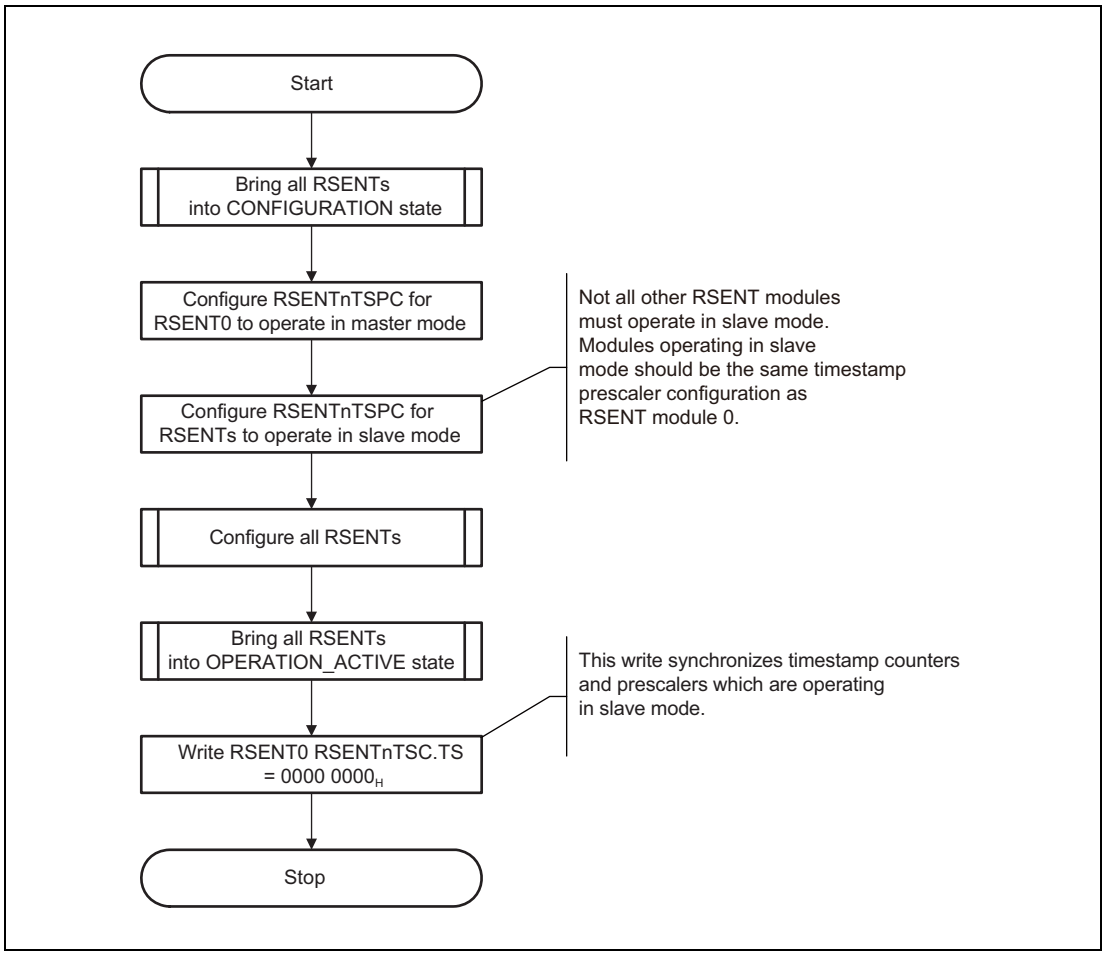

Figure 19.4 Timestamp Counter Synchronization

Synchronization of the timestamp can be done if the state of the master module has changed to OPERARION_ACTIVE or OPERARION_IDLE.

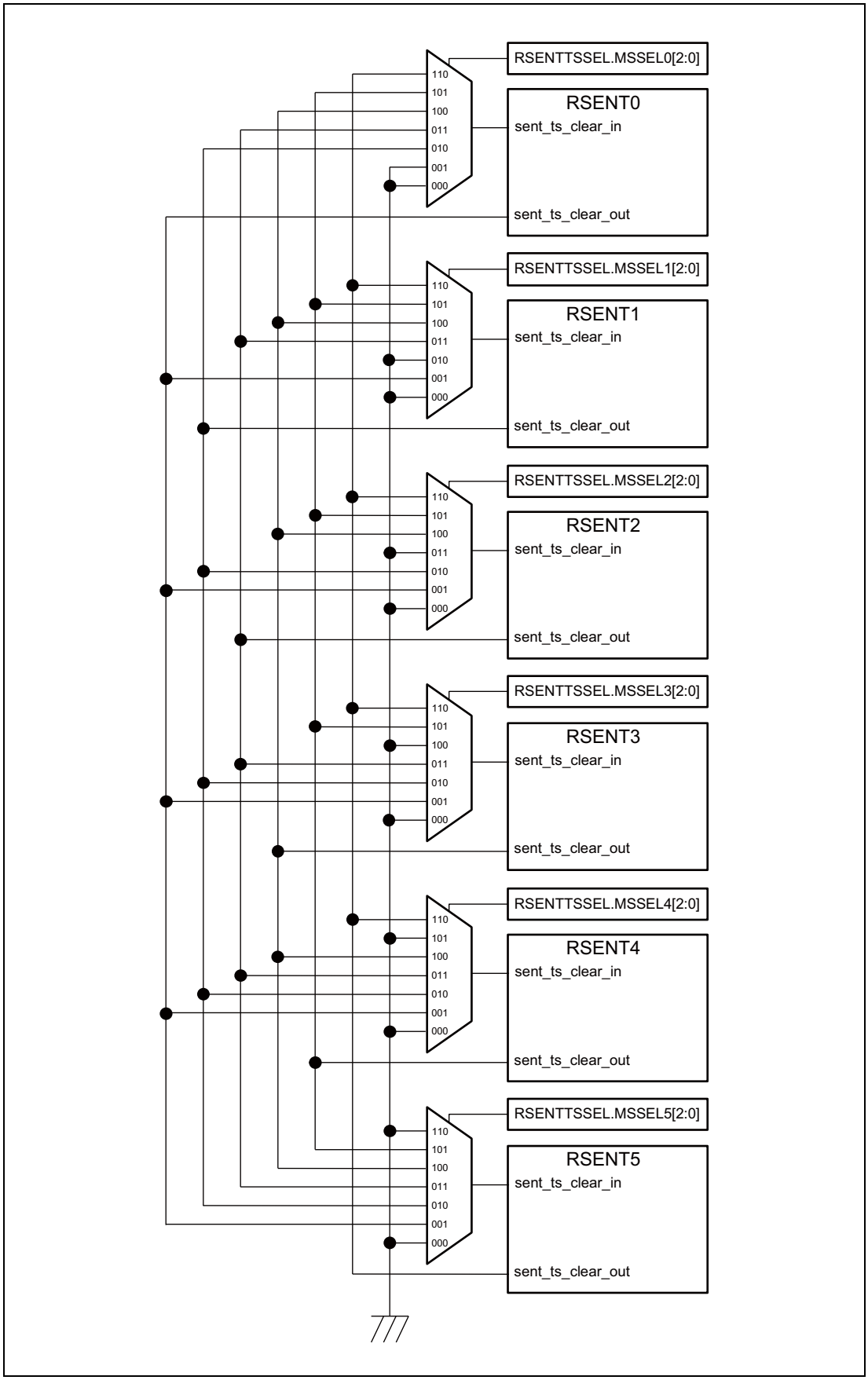

Figure 19.5 Timestamp Signal Connection among Channels

19.5.2 Communication Clock Configuration

19.5.2.1 RX BRP Setting

Use the formula below to obtain the settings for BRP.SCDV and BRP.SCMV in accord with $f_{COMMUNICATION}$ to be used (the frequency of the clkc clock) so that the sample clock frequency is 16 MHz (for example, if the settings are for BRP.SCDV = 4/BRP.SCMV = 6, replace this with BRP.SCDV = 2/BRP.SCMV = 3). The input clock (clkc clock) is frequency-divided according to the settings of BRP.SCDV and BRP.SCM to generate the sample clock.

Set $f_{COMMUNICATION}$ (the frequency of the clkc clock) so that it falls within the range from 32 to 100 MHz (or at precisely 16 MHz). Use the formula below to obtain the values for BRP.SCDV and BRP.SCM such that the sample clock frequency becomes 16 MHz.

$$f_{SAMPLE} = 16\ MHz = f_{COMMUNICATION} \times \frac{Sample\ Clock\ Multiplication\ Value\ (BRP.SCMV+1)}{Sample\ Clock\ Division\ Value\ (BRP.SCDV+1)}$$

Where Sample Clock Multiplication Value =1 (BRP.SCMV = 00000_B),
Sample Clock Division Value = 5 (BRP.SCDV = 0000100_B),
$f_{COMMUNICATION}$ = 80 MHz
f_{SAMPLE} = 80 × 1/5 = 16 MHz

19.5.2.2 RX and SPC Tick Settings

The used tick length in RX and SPC function can be configured with the RSENTnBRP.TTI and RSENTnBRP.TTF bits. Tick lengths from 1.0 µs to 90.0 µs with a resolution of 0.1 µs can be configured.

The RSENTnBRP.TTI holds the integer part of the tick length and the RSENTnBRP.TTF bits hold the fractional part of the tick length. The tick length is then calculated by:

$$T_{TICK} = T_{BRP.TTI} + T_{BRP.TTF}$$

Where BRP.TTI = 0000000_B, BRP.TTF = 0011_B
T_{TICK} = 1 + 0.3 = 1.3 µs

19.6 RSENT Operation

19.6.1 Changing Operation Modes

Once initialization has been completed in CONFIGURATION mode, operation can be enabled by entering OPERATION ACTIVE mode. This is done by setting the RSENTnMDC.OMC bits to OPERATION ACTIVE and waiting for the RSENTnMST.OMS to transition to OPERATION ACTIVE.

Once in OPERATION ACTIVE mode the RSENT module begins to receive messages or SPC communication can be started depending on the configuration.

Figure 19.6 shows the communication enabled flow assuming that the RSENT module is in RESET mode:

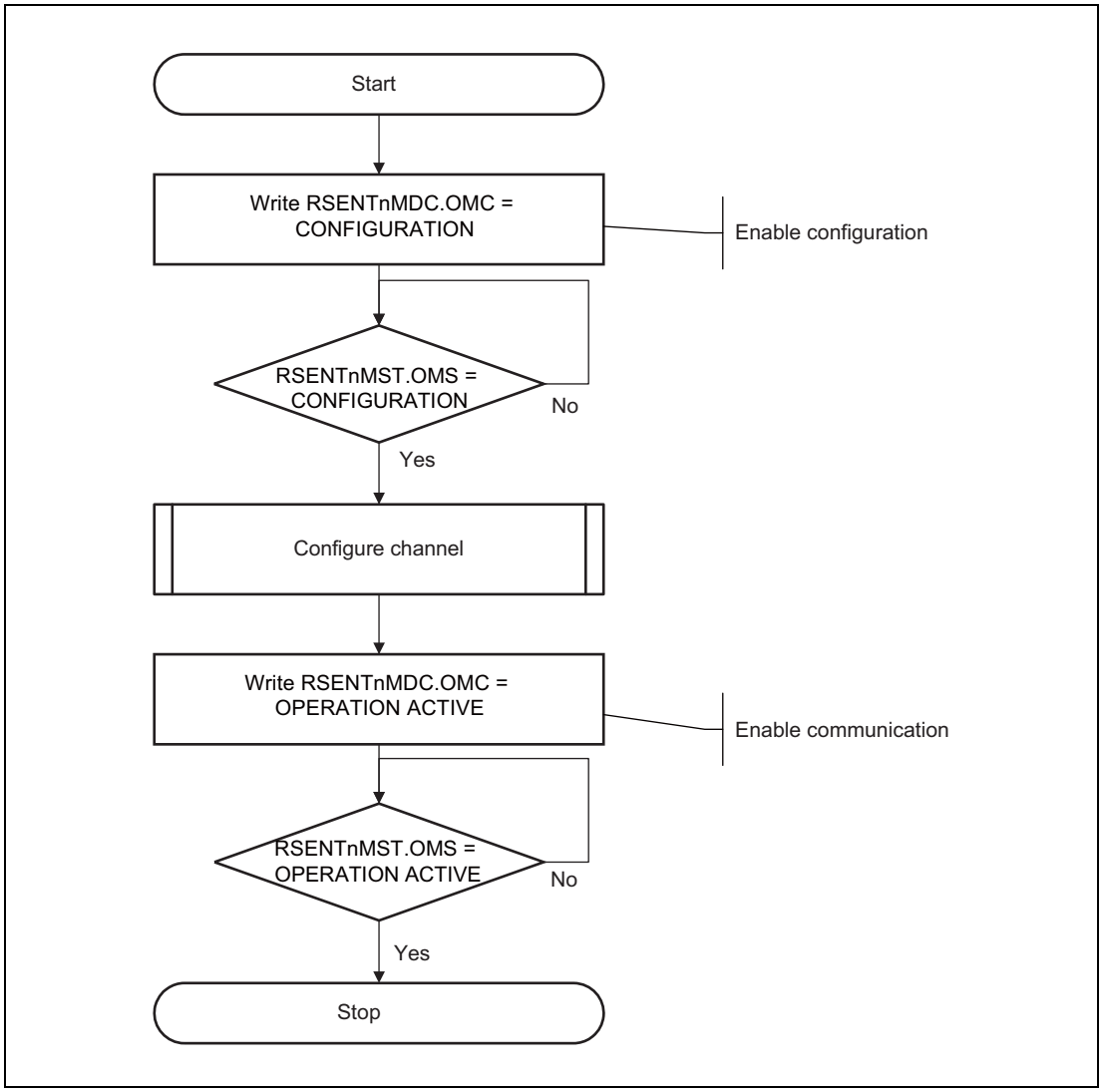

Figure 19.6 Communication Enable Flow

To leave OPERATION ACTIVE mode, communication should be disabled first by entering OPERATION IDLE mode. This is done by setting the RSENTnMDC.OMC bits to OPERATION IDLE and waiting for the RSENTnMST.OMS bits to transition to OPERATION IDLE.

However, when the SPC mode is enabled (CC.SPCE = 1) and the SPC trigger transmission has not been requested after the previous SPC communication has been completed (e.g. successful reception for the previous SPC trigger transmission), the RSENT module can directly enter the CONFIGURATION mode.

The transition between OPERATION ACTIVE and OPERATION IDLE depends on the setting of the RSENTnCC.SPCE bit.

(1) RSENTnCC.SPCE = 0

In case a reception is currently ongoing, the mode change from OPERATION ACTIVE to OPERATION IDLE takes place when the receive buffer was updated or error was flagged (see **Section 19.6.2.3, Fast Channel Message Reception**).

In case no reception is ongoing, the mode change from OPERATION ACTIVE to OPERATION IDLE takes place immediately.

(2) RSENTnCC.SPCE = 1

In case a reception is ongoing, the mode change from OPERATION ACTIVE to OPERATION IDLE takes place when the falling edge of the end pulse is received.

In case a no response error is flagged, the mode change from OPERATION ACTIVE to OPERATION IDLE takes place at the same time as the error flagging.

The mode change from OPERATION ACTIVE to OPERATION IDLE takes place when the sequence of making a SPC trigger and receiving the response has been completed. This means when a response was already received, the transition takes place immediately. When the response is still pending, the mode change from OPERATION ACTIVE to OPERATION IDLE takes place when the falling edge of the end pulse is received.

CONFIGURATION mode can be entered by writing CONFIGURATION to the RSENTnMDC.OMC bits and waiting for the RSENTnMST.OMS to transition to CONFIGURATION.

Once CONFIGURATION mode is entered, the remaining status and message information stored in the RSENT module is lost since status and message information is cleared in CONFIGURATION mode.

Figure 19.7 shows the communication disable flow assuming that the RSENT module is in OPERATION ACTIVE mode.

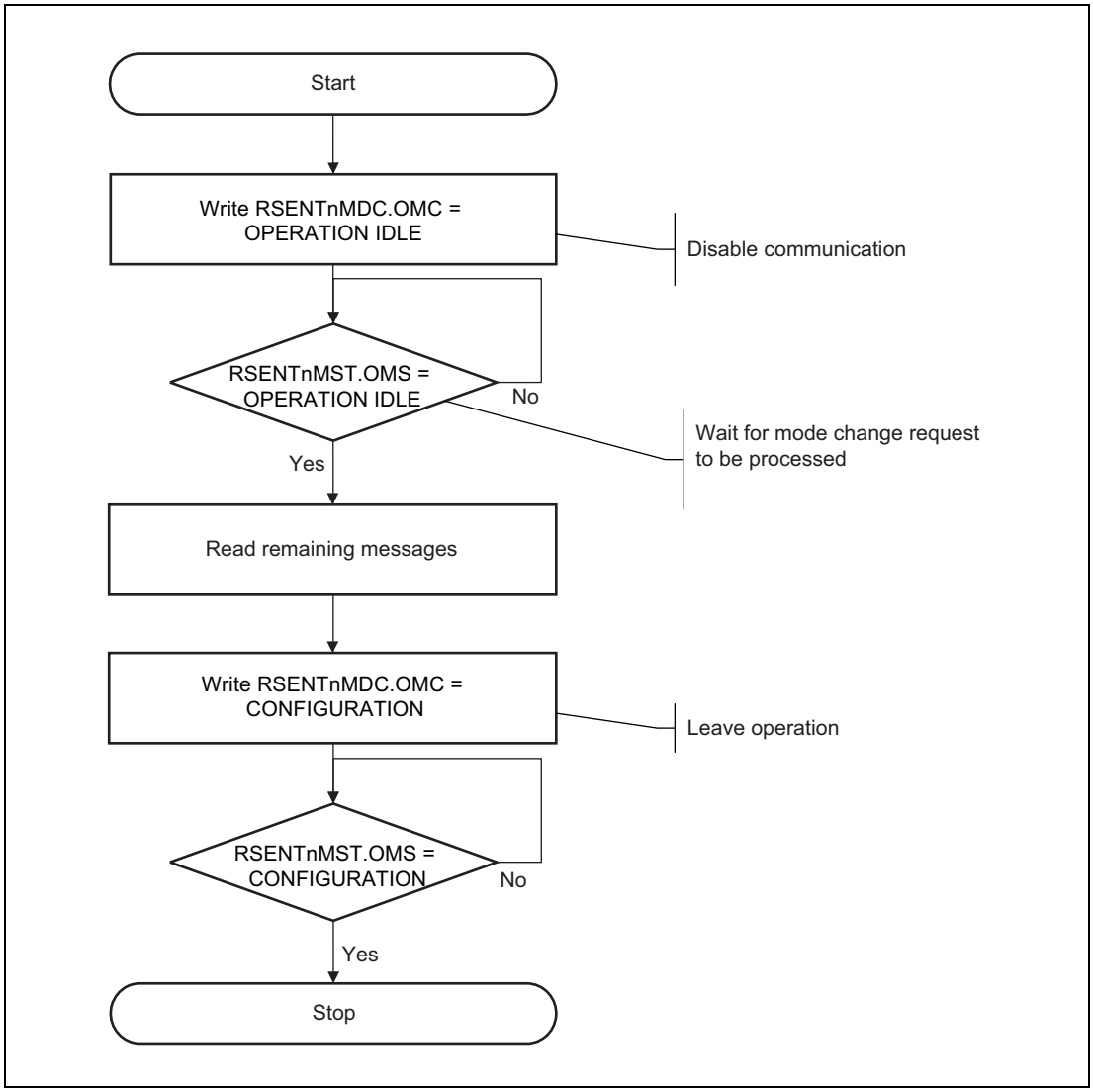

Figure 19.7 Communication Stop Flow

19.6.2 Message Reception

RSENT message reception is composed of the calibration pulse reception followed by the data nibble pulse reception.

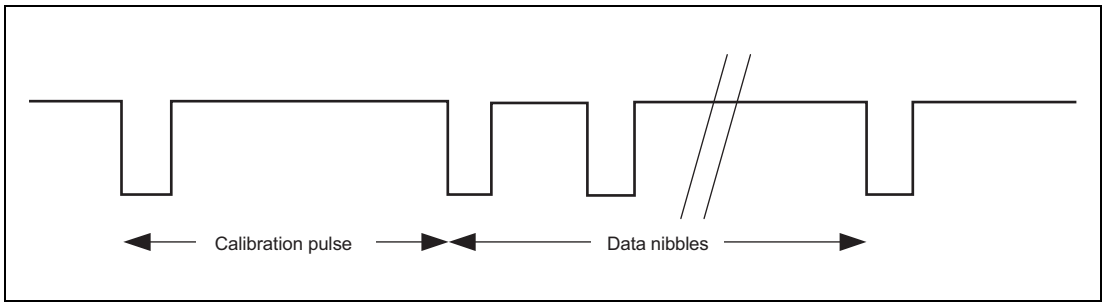

Figure 19.8 RSENT Received Message Structure

19.6.2.1 Calibration Pulse Reception

Within the calibration pulse reception phase the internally generated clock tick is adjusted to the transmit clock speed.

In addition, the calibration pulse is used to end the previous message and perform message diagnostics. The RSENT module supports automatic calibration pulse length diagnostics in variable message length modes (RSENTnCC.PPTC = 0). In case the calibration pulse ratio check fails, the calibration pulse length variation error flag (RSENTnCS.CVS) is set to 1.

19.6.2.2 Data Nibble Reception

The receive function of the RSENT module is a straightforward capture and compare function. The RSENT module receives sensor information encoded by the temporal distance of two consecutive falling edges on the data line. The temporal distance (the number of clock ticks) is captured and compared against a set of values to determine the actual nibble value. The data encoding is illustrated in **Table 19.27** below.

Table 19.27 Data Nibble Encoding

Nibble Period (Number of Clock Ticks)	Nibble Value (Binary)
12	0000_B
13	0001_B
14	0010_B
15	0011_B
16	0100_B
17	0101_B
18	0110_B
19	0111_B
20	1000_B
21	1001_B
22	1010_B
23	1011_B
24	1100_B
25	1101_B
26	1110_B
27	1111_B

The received data nibbles are composed into an RSENT message which is then stored in the fast channel message reception buffer.

Any other received nibble period during the reception of data nibbles will cause a fast channel nibble encoding error.

19.6.2.3 Fast Channel Message Reception

Messages received on the fast message channel are stored in a receive buffer.

A fast channel message reception buffer is composed of the calibration pulse length register (RSENTnCPL), the message length register (RSENTnML), the fast channel receive timestamp register (RSENTnFRTS), and the fast channel receive data register (RSENTnFRXD).

These registers are arranged on successive addresses for a transfer of the register content into memory using DMA.

The RSENT module is equipped with a double receive buffer structure that allows the storage of two complete RSENT messages including the related timestamp and message length information. Message decoding and assembling are done in a separate register stage.

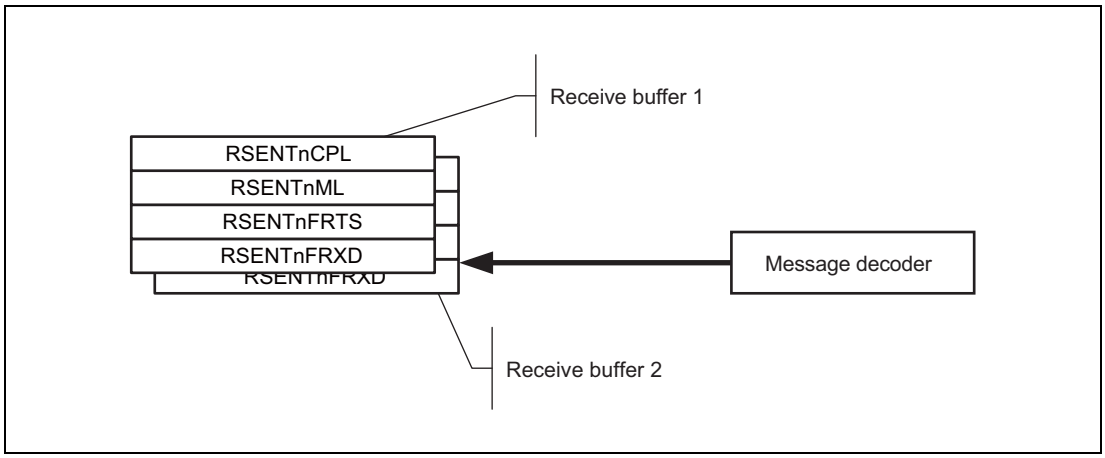

Figure 19.9 Fast Channel Message Reception Buffer

The first received message is placed into the message buffer that can be accessed by the CPU. This buffer (except the RSENTnFRXD.SNDM bit) is not updated any more until the RSENTnFRXD.FND bit was read.

When a new message is placed into a receive buffer, the RSENTnFRXD.FND bit is set. At the same time, the RSENTnCS.FRS bit is set and, if enabled, a receive interrupt request is generated.

When receive buffer 1 is holding an unprocessed message (the RSENTnFRXD.FND bit is 1), any further incoming message is placed in receive buffer 2. Receive buffer 2 is updated with any further incoming messages. In case an unprocessed message in receive buffer 2 is overwritten, the RSENTnCS.FMS bit is set to 1.

When the CPU reads the RSENTnFRXD.FND bit and there is valid data in buffer 2, the data previously located in receive buffer 2 becomes available in the receive buffer and is accessible by the CPU. If enabled, a new interrupt request for fast channel data is generated and RSENTnCS.FRS is set.

When the RSENTnFRXD.FND/ RSENTnCS.FRS bit is not set, the data in the receive buffer is not defined and the CPU should not access the receive buffer.

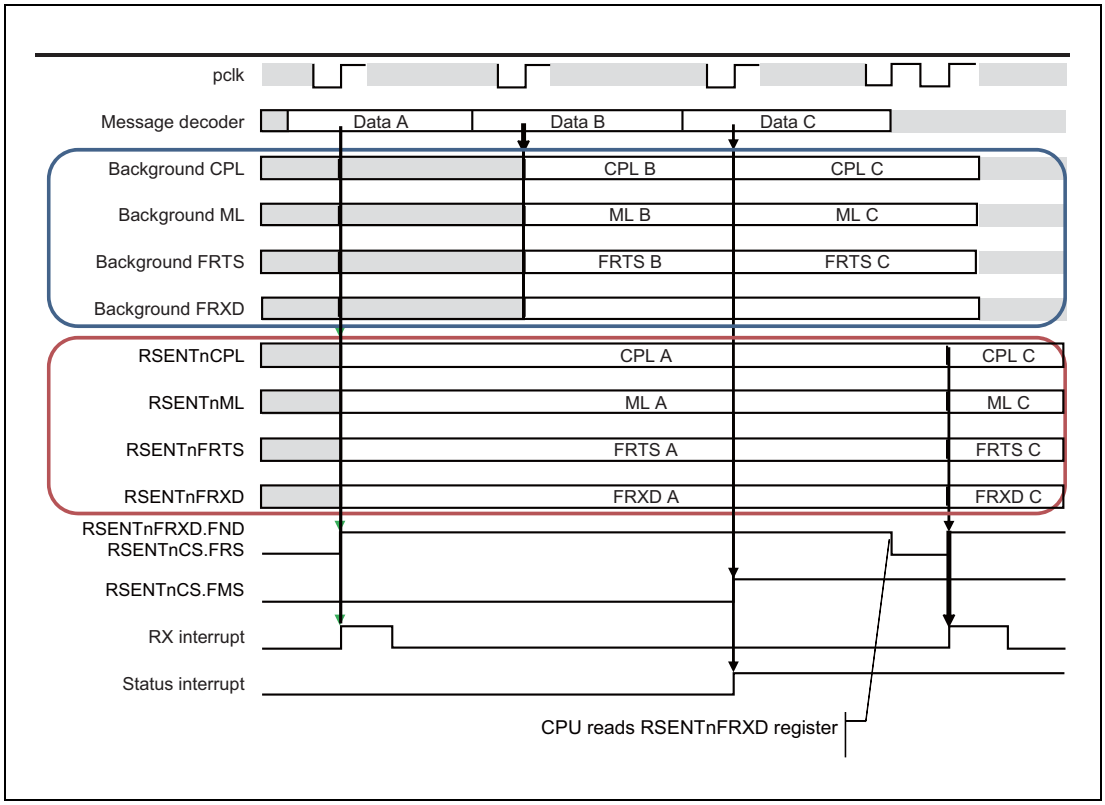

Figure 19.10 Fast Channel Message Reception Buffer Update Timing

The update timing of the receive buffer depends on the applied configuration as depicted in **Figure 19.11** to **Figure 19.14**.

The RSENTnFRTS register is updated with the current timestamp counter register value when the calibration pulse is detected.

The data alignment in the RSENTnFRXD register depends on the nibble data count (RSENTnCC.NDN).

Table 19.28 Data Nibble Alignment in RSENTnFRXD Register

RSENTnCC.NDN	23:20	19:16	15:12	11:8	7:4	3:0
000_B	Undefined	Undefined	Undefined	Undefined	Undefined	Nibble 1
001_B	Undefined	Undefined	Undefined	Undefined	Nibble 1	Nibble 2
010_B	Undefined	Undefined	Undefined	Nibble 1	Nibble 2	Nibble 3
011_B	Undefined	Undefined	Nibble 1	Nibble 2	Nibble 3	Nibble 4
100_B	Undefined	Nibble 1	Nibble 2	Nibble 3	Nibble 4	Nibble 5
101_B	Nibble 1	Nibble 2	Nibble 3	Nibble 4	Nibble 5	Nibble 6

(1) SAE operation with variable message length and preferred check method (RSENTnCC.SPCE = 0, RSENTnCC.PPTC = 0, RSENTnCC.FCM = 0)

In this operation mode, the RSENT module automatically performs the check for successive calibration pulse variation according to the preferred option in the J2716 2010 specification. In this mode, message diagnostics is done after the calibration pulse was received following a message.

If this check is passed, the message reception buffer is updated.

If this check is not passed, the message reception buffer is not updated and RSENTnCS.CVS is set to 1.

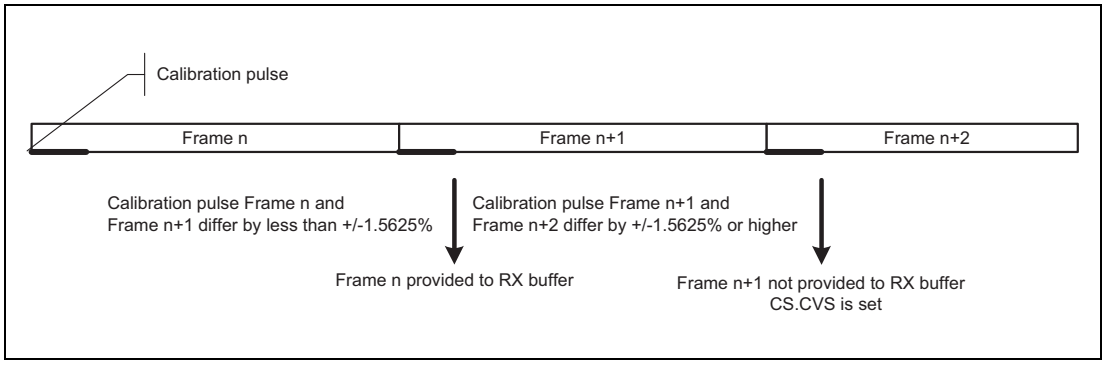

Figure 19.11 Buffer Update in Variable Message Length Mode and Preferred Check Method

(2) SAE operation with variable message length and optional check method (RSENTnCC.SPCE = 0, RSENTnCC.PPTC = 0, RSENTnCC.FCM = 1)

In this operation mode, the RSENT module automatically performs the check for successive calibration pulse variation according to the optional frame check method as described in the J2716 2010 specification. In this mode, the calibration pulse of the current frame is compared to the calibration pulse of the last valid preceding frame.

If this check is passed, the message reception buffer is updated.

If this check is not passed, the message reception buffer is not updated and RSENTnCS.CVS is set to 1.

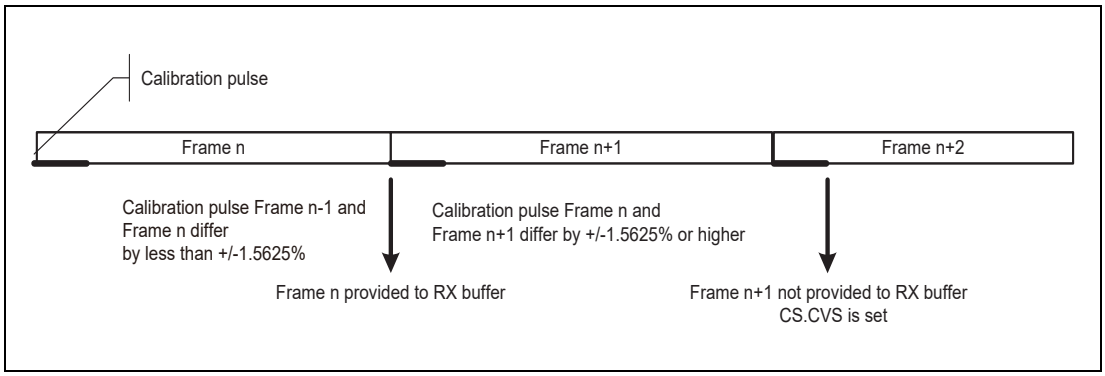

Figure 19.12 Buffer Update in Variable Message Length Mode and Optional Check Method

(3) SAE operation with fixed message length (RSENTnCC.SPCE = 0, RSENTnCC.PPTC = 1)

In this mode, the RSENT module does not perform the check for calibration pulse and message length ratio according to the preferred option in the J2716 2010 specification. In this mode, the RSENT module provides the calibration pulse length in the RSENTnCPL register and the message length information in the RSENTnML register. The numbers provided are based on samples.

The message buffer is updated at the beginning of the following calibration pulse irrespective of the values in the RSENTnCPL and RSENTnML registers. The CPU needs to calculate the ratio and either accept or discard the message.

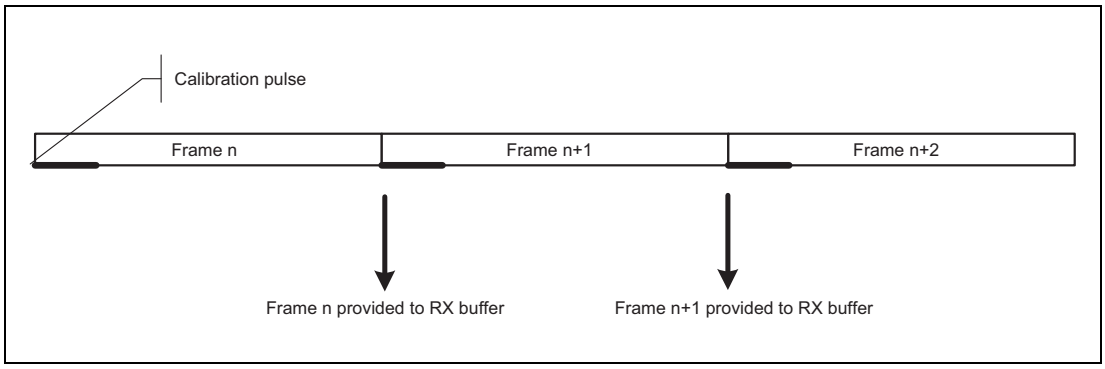

Figure 19.13 Buffer Update in Fixed Message Length Mode

The RSENTnCS.CVS (calibration pulse width variation error status) bit is never set in this mode.

(4) SPC operation (RSENTnCC.SPCE = 1)

In this operation mode, sensor data transmission is done following a SPC master trigger pulse. Within SAE SENT communication, the calibration pulse or pause pulse is aborting the previous message. In SPC communication, the sensor is only sending data following a SPC trigger request. An end pulse sent by the sensor is aborting the message. The message buffer is updated at the beginning of the end pulse.

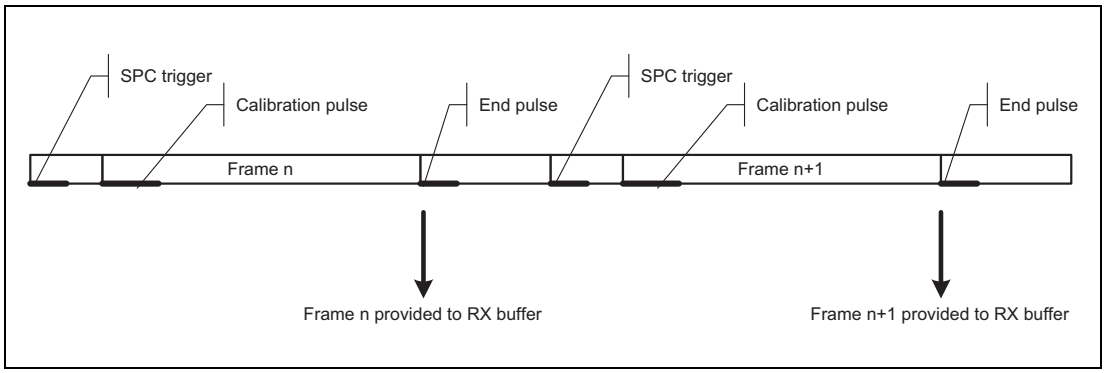

Figure 19.14 Buffer Update in SPC Mode

The RSENTnCS.CVS (calibration pulse width variation error status) bit is never set in this mode.

The RSENT module provides the calibration pulse length in the RSENTnCPL register and the message length information in the RSENTnML register. The numbers provided are based on samples. The CPU needs to calculate the ratio of calibration pulses and/or message length and either accept or discard the message.

In case of variable message length mode, the RSENT module cannot perform this check because the receive timing of the next calibration pulse depends on the next SPC trigger timing.

19.6.2.4 Fast Channel Reception Flow

In **Figure 19.15**, the recommended reception flow for the fast channel message reception buffer is shown.

When using a polling or event driven method, the CPU should only read the setting of the RSENTnCS.FRS bit to check the availability of new fast channel data.

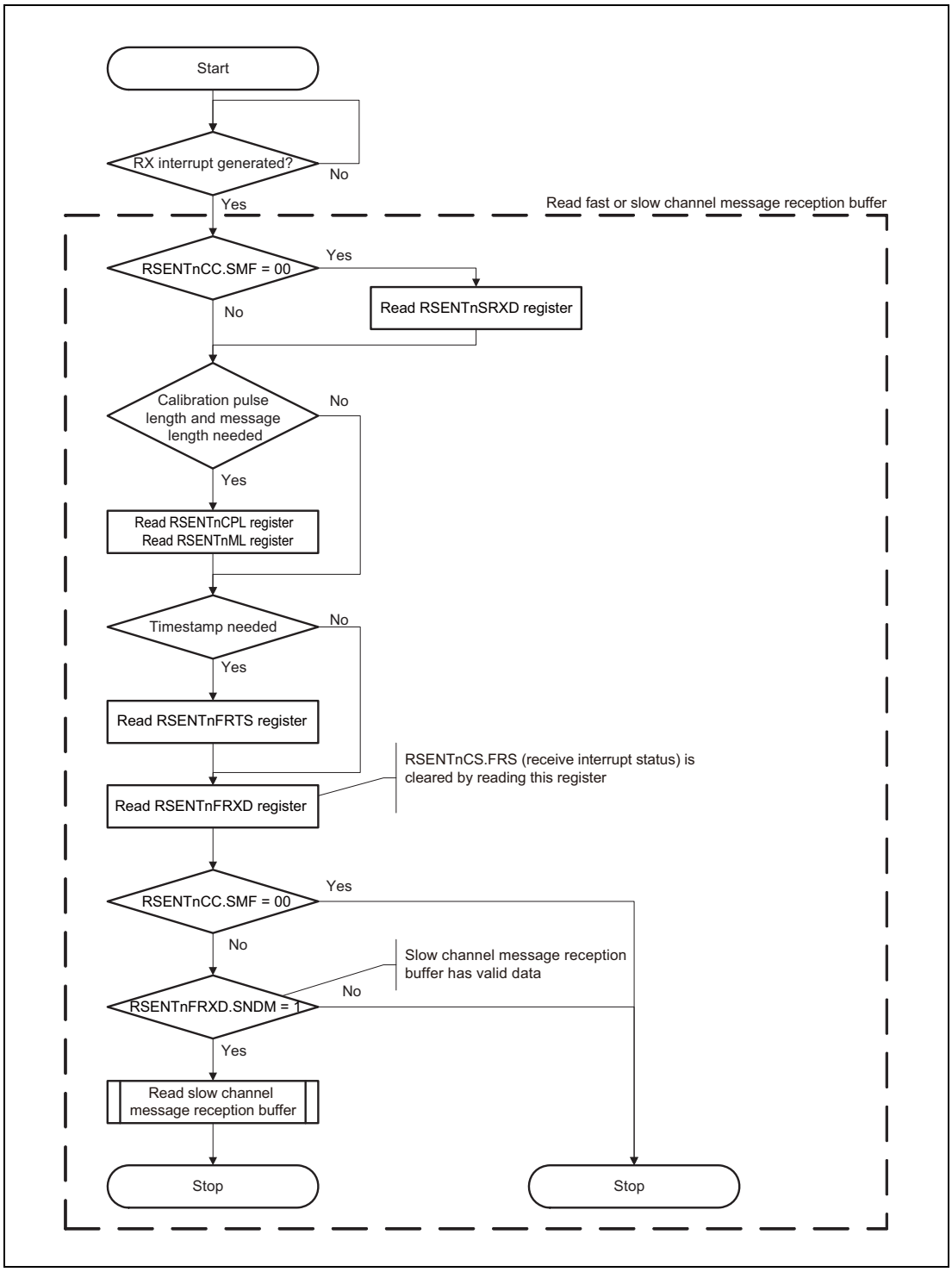

Figure 19.15 Fast Channel Reception Flow

In any case, the CPU should keep the order in reading the receive buffer registers as shown in the flow. The RSENTnFRXD register should be the last register to be accessed.

The handling of the slow channel message reception buffer is described in **Section 19.6.2.6, Slow Channel Reception Flow**.

In case of SAE communication with pause pulse and fixed message length, the flow must be extended by checking of the ratio of the calibration pulse to message length. This variation check must be performed by the CPU. In case the variation check fails, the CPU must discard the received message.

19.6.2.5 Slow Channel Message Reception

The RSENT module supports extraction of the slow message out of the fast channel messages by using the status and communications nibble bits 3 and 2 out of the status and communications nibble. In order to enable the slow channel extraction, the CPU should set the RSENTnCC.SMF bits to the expected serial message format.

When no serial message extraction is selected (RSENTnCC.SMF = 00_B), the RSENTnSRXD register becomes part of the fast channel message reception buffer structure (including buffer 2) and RSENTnSRTS register should be ignored. The communications and status nibble is placed in the RSENTnSRXD.IDD bits. Furthermore no slow channel new data and slow channel message lost flags are generated.

In order to receive the slow channel serial message, all fast channel serial messages contributing to a slow channel serial message must be received successfully and the received slow channel serial message must comply with the selected serial message format.

A message lost on the fast channel does not impact the reception on the slow channel.

A slow channel message reception buffer is composed of the slow channel receive timestamp register (RSENTnSRTS) and the slow channel receive data register (RSENTnSRXD).

In opposite to the fast channel message reception buffer, the slow channel message reception buffer does not support a double receive buffer structure; only a single receive buffer structure is available.

Message decoding and assembling is done in a separate register stage.

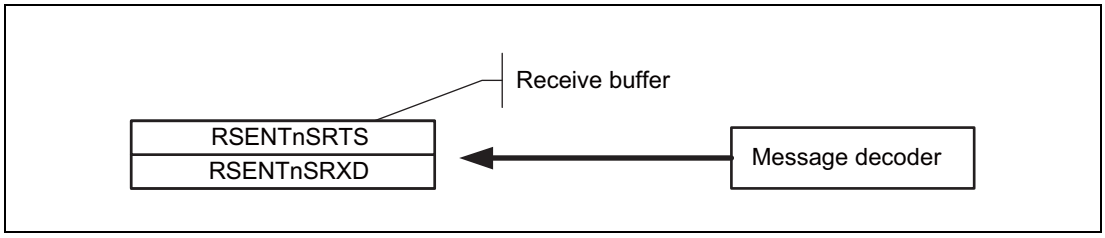

Figure 19.16 Slow Channel Message Reception Buffer

The slow channel message reception buffer is updated at the same time as the fast channel message reception buffer that holds the last status and communications nibble required for the slow channel message. The RSENTnSRXD.SND bit is set to 1 at the same time.

Further updates to the buffer are not carried out until after the RSENTnSRXD.SND bit has been read.

When the receive buffer is holding an unprocessed message (RSENTnSRXD.SND is 1), any further incoming message is lost (the slow channel message reception buffer is not updated) and RSENTnCS.SMS is set to 1.

When the CPU reads the RSENTnSRXD register, RSENTnSRXD.SND is automatically cleared.

The RSENTnSRTS register is updated with the current timestamp counter register value of the last frame contributing to the slow channel message.

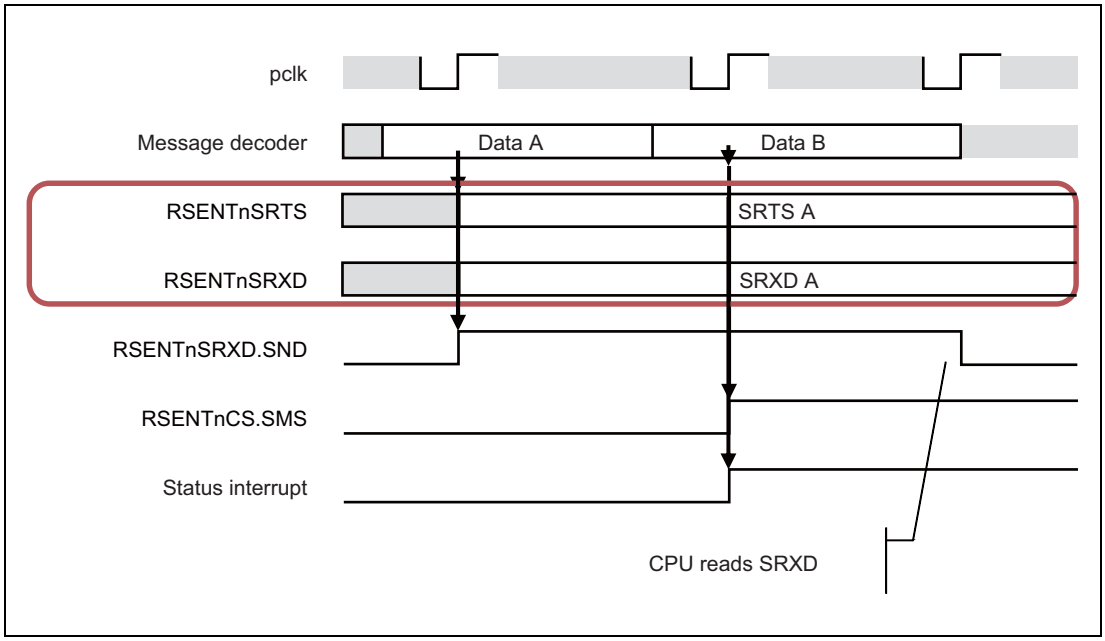

Figure 19.17 Slow Channel Message Reception Buffer Update Timing

The data alignment in the SRDX register depends on the slow channel message format (RSENTnCC.SMF) and the received configuration bit.

Table 19.29 Data Alignment in RSENTnSRXD Register

RSENTnCC.SMF	RSENTnSRXD.SMGC	RSENTnSRXD.IDD [19:16]	RSENTnSRXD.IDD [15:12]	RSENTnSRXD.IDD [11:8]	RSENTnSRXD.IDD [7:4]	RSENTnSRXD.IDD [3:0]
00_B	Undefined	Undefined	Undefined	Undefined	Undefined	C & S nibble
01_B	Undefined	Undefined	Undefined	Message ID[3:0]	DATA[7:4]	DATA[3:0]
10_B	0	Message ID[7:4]	Message ID[3:0]	DATA[11:8]	DATA[7:4]	DATA[3:0]
10_B	1	Message ID[3:0]	DATA[15:12]	DATA[11:8]	DATA[7:4]	DATA[3:0]

19.6.2.6 Slow Channel Reception Flow

In **Figure 19.18**, the recommended reception flow for the slow channel message reception buffer is shown. When the slow channel receive data is required, this process should be executed as part of the fast channel reception flow.

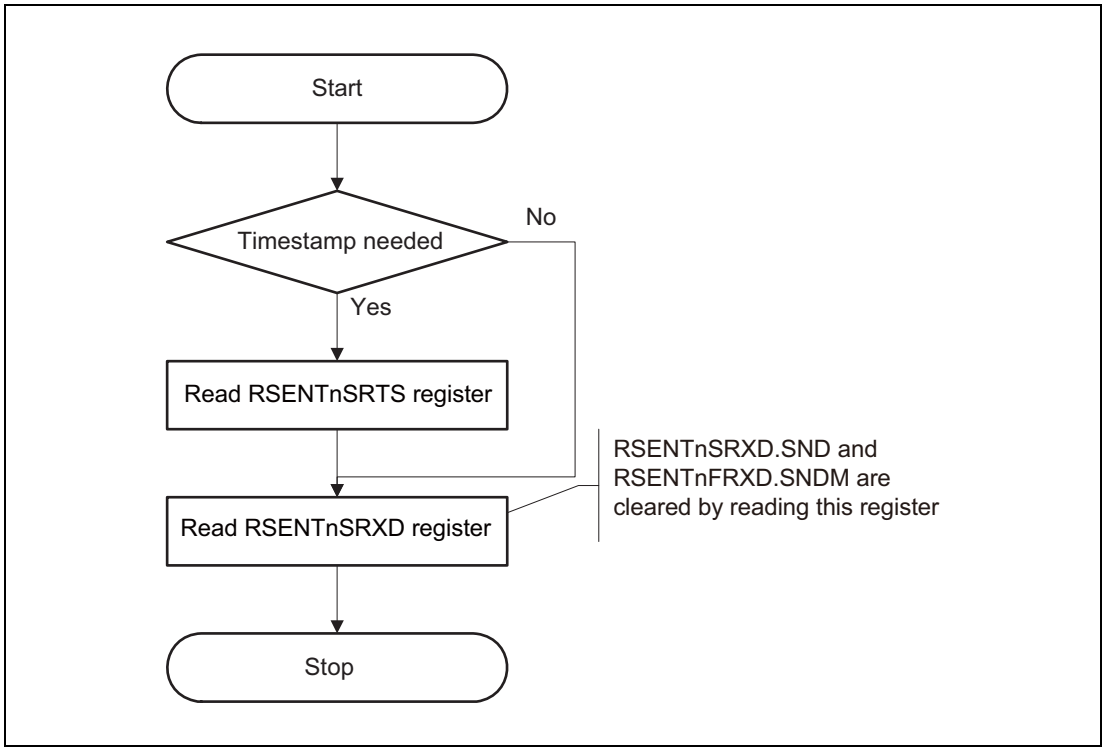

Figure 19.18 Slow Channel Reception Flow

In any case, the CPU should keep the order in reading the slow channel message reception buffer registers as shown in the flow. The RSENTnSRXD.SND bit should be accessed as last.

19.6.2.7 DMA Flow

In case of DMA usage, the start address for the DMA usage and the number of transfers define which part of the receive buffer will be transferred. The RSENTnFRXD register should be the last register to be accessed using a 32 bit access method.

In case of SAE communication with pause pulse and fixed message length, the flow must be extended by checking of the ratio of the calibration pulse to message length. This variation check must be performed by the CPU. In case the variation check fails, the CPU must discard the received message.

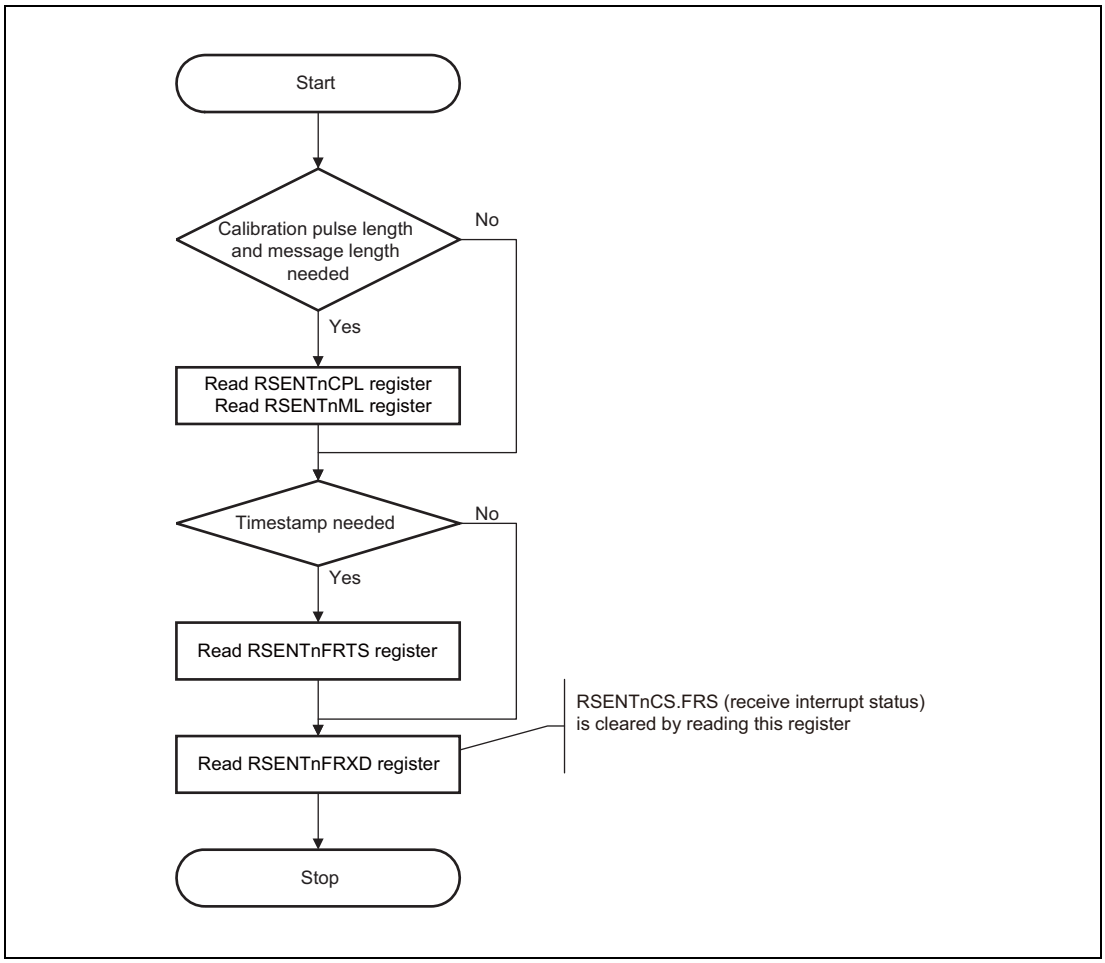

Figure 19.19 DMA Reception Flow

In the software processing, when the transferred data set, the CPU should check the status of the transferred RSENTnFRXD.SNDM bit. If this bit is set to 1, then the user needs to read the slow channel message reception buffer if needed.

19.6.2.8 Error Flagging

The message lost error flag (RSENTnCS.SMS or RSENTnCS.FMS) is set when a new message's diagnostics pass before the previous message is read.

The no response error flag (RSENTnCS.NRS) is set when the CPU has written to RSENTnSPTC.TLL before or during response reception.

The timing at which the fast channel reception error flags (RSENTnCS.CVS, RSENTnCS.CLS, RSENTnCS.FNS, RSENTnCS.FES, and RSENTnCS.FCS) and the slow channel reception error flags (RSENTnCS.SCS, and RSENTnCS.SES) are updated varies with the setting of bits in the communications configuration register (RSENTnCC.SPCE, RSENTnCC.FCM, RSENTnCC.PPC, and RSENTnCC.PPTC).

Table 19.30 and **Table 19.31** list the timings with which the error flags corresponding to each setting are updated.

When a fast channel nibble encoding error or calibration pulse length error is detected, message reception is aborted immediately. No further error flagging for the given message is done. Message decoding starts again after the detection of a valid calibration pulse.

When OPERATION IDLE mode is entered in response to the setting of RSENTnMDC.OMC, error flags of errors for the calibration or the fast channel reception which have been detected in a message being received are not set. A received message is also discarded.

If a fast channel nibble encoding error or calibration pulse length error is detected, entry to OPERATION IDLE mode is immediate.

If a fast channel nibble count error, fast channel CRC error, or calibration pulse length variation error is detected, entry to OPERATION IDLE mode proceeds at the end of the next status and communications nibble.

The fast channel nibble count error flag (RSENTnCS.FNS) is only set when a valid calibration pulse is detected and the subsequent data nibble has a valid length (≥ 12 ticks and ≤ 27 ticks) or no data nibble has been received between two valid calibration pulses.

The fast channel nibble encoding error flag (RSENTnCS.FES) is only set when an encoding error has occurred in a status and communications nibble, CRC nibble, or data nibble.

When the SPC function is enabled (i.e. RSENTnCC.SPCE = 1), the calibration pulse length error flag (RSENTnCS.CLS) is set when the width of a pulse at the expected calibration pulse position is not a valid pulse width for a calibration pulse. When the SPC function is disabled (i.e. RSENTnCC.SPCE = 0), the calibration pulse length error flag (RSENTnCS.CLS) is set when the width of a pulse at a next expected calibration pulse position after the reception of a valid calibration pulse is not a valid pulse width for a calibration pulse.

An additional error flag being set while seeking a valid calibration pulse does not affect the reception of subsequent frames.

Table 19.30 Timing to Set Error Flag (RSENTnCC.SPCE = 0)

RSENTnCC.SPCE	**0**							
RSENTnCC.FCM	**0**				**1**			
RSENTnCC.PPC	**0**		**1**		**0**		**1**	
RSENTnCC.PPTC	**0**	**1**	**0**	**1**	**0**	**1**	**0**	**1**
RSENTnCS.FCS	EC	×	EC	IM	IM	×	IM	IM
RSENTnCS.FES	EC	×	EC	IM	IM	×	IM	IM
RSENTnCS.FNS	EC	×	EC	—	—	×	—	—
RSENTnCS.SCS	IM	×	IM	IM	IM	×	IM	IM
RSENTnCS.SES	IM	×	IM	IM	IM	×	IM	IM
RSENTnCS.CLS	IM	×	IM	IM	IM	×	IM	IM
RSENTnCS.CVS	EC	×	EC	—	EC	×	EC	—

Note: EC: End of calibration pulse (on the falling edge of a valid calibration pulse)
IM: Immediately upon detection (immediately when the error is detected)
—: Error flag not detected
×: Setting prohibited

Table 19.31 Timing to Set Error Flag (RSENTnCC.SPCE = 1)

RSENTnCC.SPCE	**0**							
RSENTnCC.FCM	**0**				**1**			
RSENTnCC.PPC	**0**		**1**		**0**		**1**	
RSENTnCC.PPTC	**0**	**1**	**0**	**1**	**0**	**1**	**0**	**1**
RSENTnCS.FCS	IM	×	IM	IM	IM	×	IM	IM
RSENTnCS.FES	IM	×	IM	IM	IM	×	IM	IM
RSENTnCS.FNS	—	×	—	—	—	×	—	—
RSENTnCS.SCS	IM	×	IM	IM	IM	×	IM	IM
RSENTnCS.SES	IM	×	IM	IM	IM	×	IM	IM
RSENTnCS.CLS	IM	×	IM	IM	IM	×	IM	IM
RSENTnCS.CVS	—	×	—	—	—	×	—	—

Note: EC: End of calibration pulse (on the falling edge of a valid calibration pulse)
IM: Immediately upon detection (immediately when the error is detected)
—: Error flag not detected
×: Setting prohibited

NOTE

When the sensor stops communications, the reception buffer and the state will not be updated after reception of the last message. Confirm the timeout by software.

19.7 SPC Function

The RSENT module supports an extension of the J2716 specification known as SPC, whereby the RSENT module can pull down the RX line to initiate RSENT message transmission.

The user can configure the polarity of the sent_spc port.

The text below describes the behavior of the sent_spc port with the default settings of RSENTnCC.SOPC. When the value of RSENTnCC.SOPC after a reset is changed, the sent_spc port operates with inverted polarity.

The user can enable or disable the SPC extension by setting the RSENTnCC.SPCE bit. When the RSENTnCC.SPCE bit is set to 0, SPC is disabled. The sent_spc port is driven low by the RSENT module, allowing normal RSENT reception to take place. When the RSENTnCC.SPCE bit is set to 1, SPC is enabled and the sent_spc port can be driven high by the RSENT module to request a frame transmission by the sensor.

The transmission function of the RSENT module is a straightforward PWM function. The purpose of this function is to communicate in direction to the sensor by the output sent_spc. With the sent_spc output, the RSENT module can pull down the signal line by an external transistor. The signal line will be held low for a configured length of tick time specified in the RSENTnSPCT.TLL bits.

The tick time is configured with the RSENTnBRP.TTI bits and the RSENTnBRP.TTF bits which are equal to the transmission tick time. For details, see **Section 19.5.2.2, RX and SPC Tick Settings**.

In a single sensor system, this function can be used to trigger data transmission from the sensor. Further data can be sent to the sensor by varying the trigger pulse length. In a multi sensor system, this function can be used to address a dedicated sensor and request a data transmission.

Once RSENT SPC initialization is complete, transmission can be triggered by writing the trigger pulse width to the RSENTnSPCT.TLL register. When a transmission is triggered, the trigger pulse with the configured length is sent. Then a frame reception is expected. After frame reception was done, a new trigger pulse can be sent.

Writing to RSENTnSPCT.TLL requests a SPC trigger transmission. After writing to RSENTnSPCT.TLL, the CPU should read RSENTnCS.NRS to check whether the previous request was completed or not.

In case RSENTnCS.NRS is set, no SPC trigger is sent and any potentially ongoing reception at this time is aborted. The CPU should clear RSENTnCS.NRS by writing 1'b1 to RSENTnCSC.NRC. The CPU can write again to RSENTnSPCT.TLL to request a SPC trigger transmission.

In case RSENTnCS.NRS is not set, the CPU should set a reception timeout counter in software. If a reception occurs before the timeout counter elapses, the user should process the received slow and fast channel data as shown in the fast channel reception flow (**Figure 19.15**) and slow channel reception flow (**Figure 19.18**).

When the timeout counter elapses without any successful reception, the addressed sensor seems not to send any valid response. The CPU should analyze the RSENTnCS register to analyze the reason for no successful reception. A new request can be made considering that when RSENTnCS.NRS gets set no SPC trigger is sent.

Purpose of the timeout function is to define a timeout window for response reception in software.

Figure 19.20 shows a transmission flow with a timeout function implemented in software. The timeout function is optional and can be omitted if not needed.

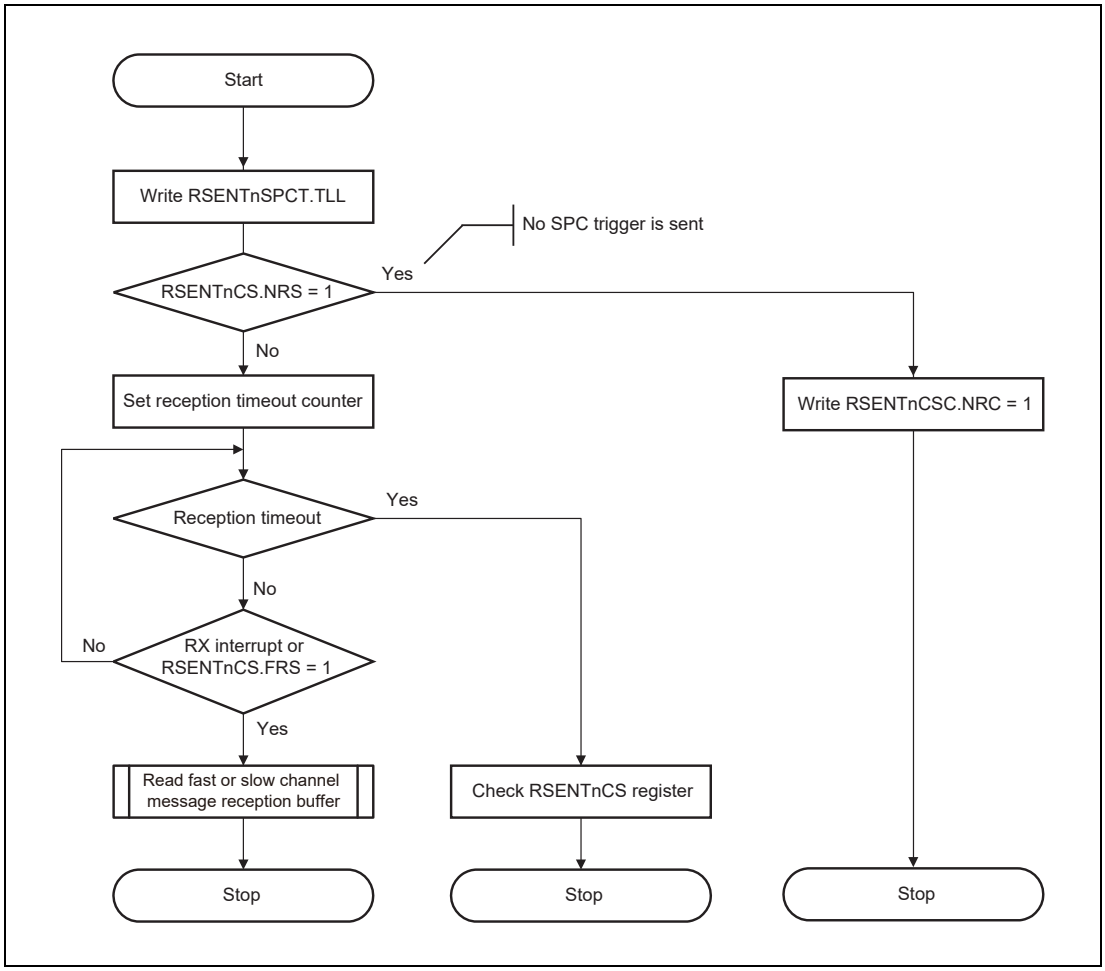

Figure 19.20 Transmission Flow

19.7.1 Multiplexing of the SENTnRX and SENTnSPCO Pin Functions

The SENTnRX input pin and SENTnSPCO output pin functions are assigned to the same multiplexed pin. Two functions can be used on the pin, when it is set for an N-ch open-drain configuration.

Figure 19.21 is a block diagram of multiplexing of the SENTnRX and SENTnSPCO pin functions.

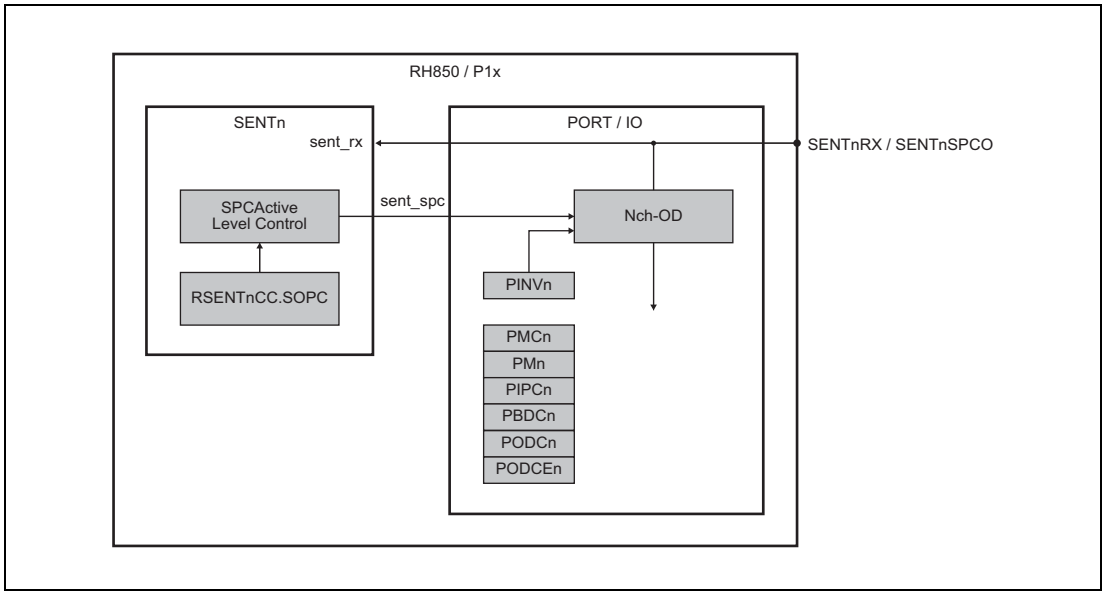

Figure 19.21 Multiplexing of the SENTnRX and SENTnSPCO Pin Functions

Connect the sent_spc signal, which is an RSENT macro output signal, to an N-ch open drain I/O buffer. The RSENT hardware macro is able to control the polarity of setnt_spc output and the polarity of the pin output by setting the SOPC bit and the PINVn register of the I/O buffer, respectively. These registers must be set in an appropriate combination.

Table 19.32 lists the register settings when the SENTnRX and SENTnSPCO pin functions share the same pin.

Table 19.32 Setting for Multiplexing of the SENTnRX and SENTnSPCO Pin Functions

Register Name		Setting	Description
PMCn	Port mode control register	1	Alternative mode
PMn	Port mode register	0	Output mode (output enabled)
PIPCn	Port IP control register	0	I/O mode is controlled by PMn.PMn_m (software or hardware I/O control)
PBDCn	Port bi-direction control register	1	Bi-direction mode is enabled
PODCn	Port open-drain control registe	1	N-ch open drain (PODCn_m = 1 or PODCEn_m = 0)
PODCEn	Port open-drain expansion register	0	N-ch open drain (PODCn_m = 1 or PODCEn_m = 0)
PINVn	Port output level inversion register	0	The pin output level is not inverted (active low when RSENTnCC.SOPC = 1)
		1	The pin output level is inverted (active high when RSENTnCC.SOPC = 0)
PFCn	Port function control register	—	Specify an alternative function of the pins. For details, see **Table 2.6, Outline of Alternative Mode Selection (PMCn.PMCn_m = 1)**.
PFCEn	Port function control expansion register		
PFCAEn	Port function control addition expansion register		

19.8 Interrupts and Checks

The RSENT module provides two interrupt lines.

The successful fast channel receive interrupt notifies the CPU that the fast channel message reception buffer was updated and is holding a set of valid received data. Also, the reception status bit is set (RSENTnCS.FRS).

The status interrupt notifies the CPU that at least one of the error flags or message lost flags in the RSENTnCS register is set.

Whether a status flag in the RSENTnCS register is contributing to the generation of an interrupt event or not can be set individually.

The execution of the CRC checks can be disabled for the slow channel and fast channel individually. In case a check is disabled, the CRC of the received message is not checked and the related error flag is never set.

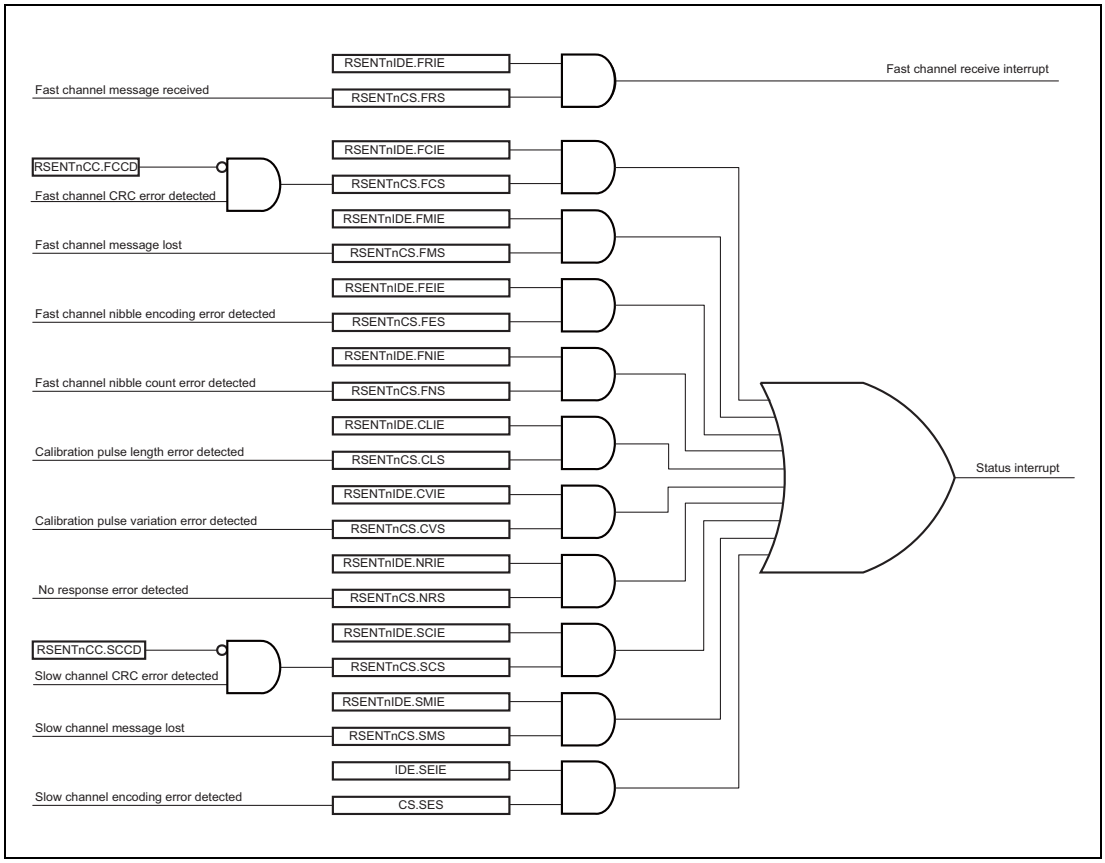

Figure 19.22 Interrupt Structure

Table 19.33 gives an overview about the relationship between set status flags and the buffer update.

Table 19.33 Status Flag Influence to Receive Buffer Behavior

RSENTnCS	Fast Channel Message Reception Buffer	Slow Channel Message Reception Buffer
FRS	Updated	Updated if all status and communications nibbles of slow channel messages are received and RSENTnCS.SES=0 and RSENTnCS.SCS=0
FCS	Not updated	Receive process aborted. Search for new start condition
FMS	Message lost	Not impacted
FES	Not updated	Receive process aborted. Search for new start condition
FNS	Not updated	Receive process aborted. Search for new start condition
CLS	Not updated	Receive process aborted. Search for new start condition
CVS	Not updated	Receive process aborted. Search for new start condition
NRS	Not updated	Receive process aborted. Search for new start condition
SCS	Not impacted	Not updated
SMS	Not impacted	Message lost
SES	Not impacted	Receive process aborted. Search for new start condition

Section 20 PSI5

This section contains a generic description of the PSI5.

20.1 Features of RH850/P1x PSI5

20.1.1 Number of Channels

The RH850/P1x has the following number of channels of the PSI5.

Table 20.1 Channels of PSI5

PSI5	
Number of channels	2
Name	PSI5n

Index n

Throughout this section, the individual channels of the PSI5 are identified by the index “n” (n = 0, 1), for example, PSI5nCHCTL for the PSI5 channel control register.

20.1.2 Register Base Addresses

All PSI5n register addresses are given as address offsets to the individual base address <PSI5n_base>.

The base address <PSI5n_base> of each PSI5n is listed in the following table.

Table 20.2 Register Base Addresses<PSI5n_base>

PSI5n Channel	<PSI5n_base> Address
PSI50	FFE0 0000_H
PSI51	FFE0 1000_H

20.1.3 Clock Supply

All PSI5n provide one clock input.

Table 20.3 PSI5n Clock Supply

Module	Clock	Connected to
PSI5n	PCLK	High-speed peripheral clock CLK_HSB
	psi5_com_clk	

20.1.4 Interrupts and DMA

The PSI5 can generate the interrupt requests shown in the following table.

Table 20.4 PSI5n Interrupt Requests

PSI5n Signal	Function	Connected to
PSI50		
INT_PSI5STS*[1]	PSI50 status interrupt	• Interrupt Controller 226 (INTPSI50SI)
INT_RXDEXIST	PSI50 receive interrupt	• Interrupt Controller 227 (INTPSI50RI) • DMA/DTS Controller trigger 117
INT_TXDEMPTY	PSI50 transfer interrupt	• Interrupt Controller 228 (INTPSI50TI)
PSI51		
INT_PSI5STS*[1]	PSI51 status interrupt	• Interrupt Controller 229 (INTPSI51SI)
INT_RXDEXIST	PSI51 receive interrupt	• Interrupt Controller 230 (INTPSI51RI) • DMA/DTS Controller trigger 118
INT_TXDEMPTY	PSI51 transfer interrupt	• Interrupt Controller 231 (INTPSI51TI)

Note 1. A set of multiple interrupts. For details, see **Section 20.4, Interrupt**.

20.1.5 Reset Sources

The PSI5 and its registers are initialized by the following reset signal.

Table 20.5 PSI5n Reset Signal

Channel	Reset Signal
PSI5n	Reset controller SYSRES

20.1.6 External Input/Output Signals

The external input/output signals of the PSI5 are listed in the following table.

Table 20.6 PSI5n External Input/Output Signal

PSI5n Signal	Function	Connect to
PSI50		
psi5_rx_data	PSI50 data input	Port PSI50DIN
psi5_tx_data	PSI50 data output	Port PSI50DOUT
PSI51		
psi5_rx_data	PSI51 data input	Port PSI51DIN
psi5_tx_data	PSI51 data output	Port PSI51DOUT

20.2 Functions

Features and functions

Among the main functions defined under the PSI5 standard (PSI5 v2.0), this IP supports the following:

- Communication Mode
  - PSI5-A: Asynchronous mode
  - PSI5-P: Synchronous parallel bus mode
  - PSI5-U: Synchronous parallel universal bus mode
  - PSI5-D: Synchronous daisy chain bus mode
  - PSI5-V: Variable time triggered synchronous operation mode
- Sensor to ECU Communication
  - Data can be received up to eight slots.
  - Bit rates: Low speed (125 Kbps); High speed (189 Kbps)
  - Automatic detection of start bits
  - Manchester to binary code conversion
  - Receivable bit length: 10 to 28 bits
  - Serial message frames can be received up to eight slots.
  - Automatic calculation of check bits for both data and serial message frames
  - Stores CRC and parity bits received with the data.
- ECU to Sensor Communication
  - Tooth Gap Mode
  - Pulse Width Mode
  - Automatic detection of start conditions
  - Frame formats 1 to 4 can be used
  - Automatic appending of synchronization bits
  - Automatic appending of CRCs
- PAS compatibility mode
  - 250 Kbps
  - MSB First reception
  - Parity check
- Appending of a timestamp to receive data and serial message frames
  - Master and slave function for synchronization of timestamp

Table 20.7 List of Operation Modes

Operation Mode		Normal Mode	PAS Compatibility Mode
Bit rate		125 Kbps/189 Kbps	250 Kbps
Data word length		10 to 28 bits	8 to 24 bits
Data direction		LSB first	MSB first
Data transmission parameter			
	Value of bit time (TYP.)	8 μs/5.3 μs	4 μs
	Value of gap time (MIN.)	8.4 μs/5.6 μs	2 μs
Communication Mode		PSI5-A, PSI5-S, PSI5-U, PSI5-D, PSI5-V	PSI5-A only

20.2.1 Block Configuration

Figure 20.1 is a block diagram of PSI5n.

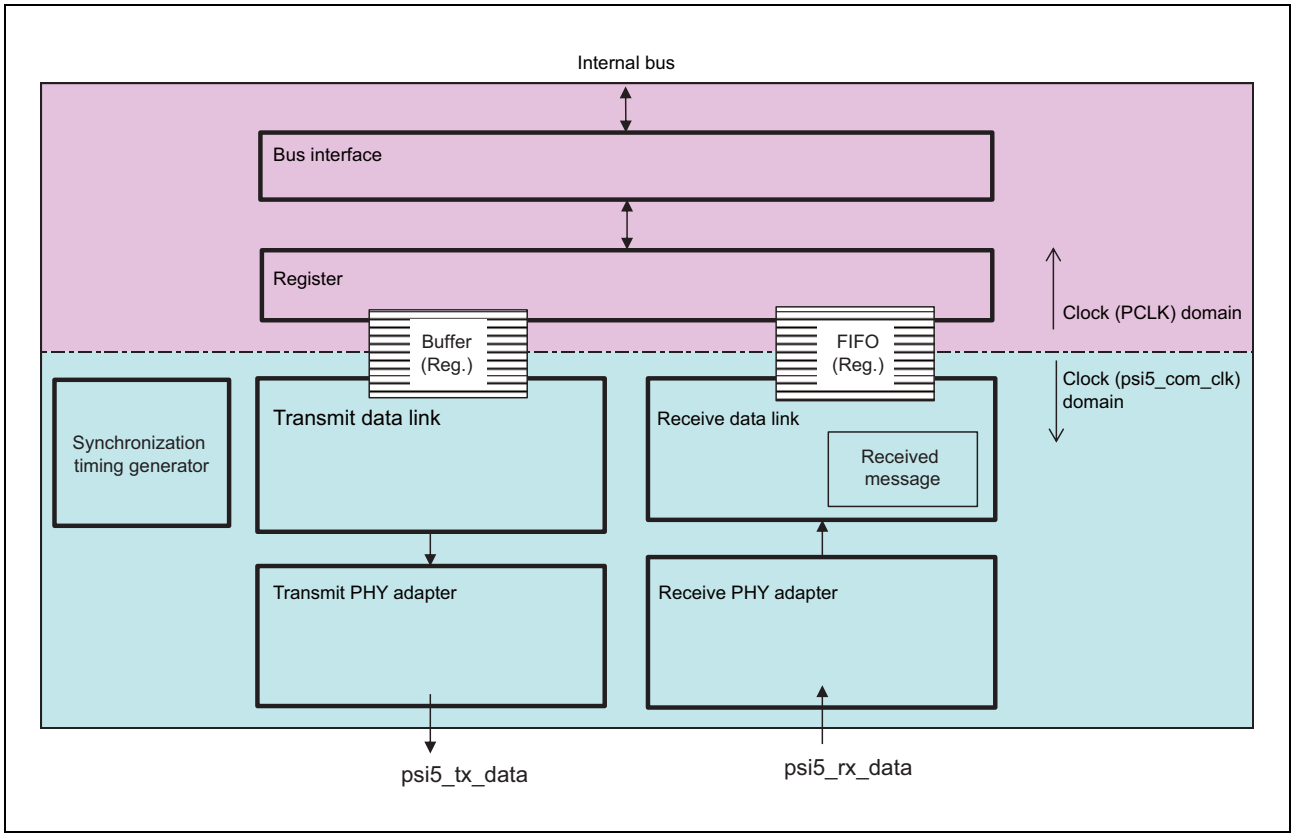

Figure 20.1 Block Diagram of PSI5

20.3 Registers

The PSI5n is controlled and operated by the registers listed in the table below.

For PSI5n base address <PSI5n_base>, see **Section 20.1.2, Register Base Addresses**.

Table 20.8 PSI5n Register Overview (1/2)

Register Name	Symbol	Address
PSI5 channel control register	PSI5nCHCTRL	<PSI5n_base> + 0000_H
PSI5 IP timer control register	PSI5nIPTIMERCTRL	<PSI5n_base> + 0010_H
PSI5 IP timer counter	PSI5nIPTIMER	<PSI5n_base> + 0014_H
PSI5 operating mode/communication mode register	PSI5nOPMCOMM	<PSI5n_base> + 0020_H
PSI5 operating-mode bit rate register	PSI5nOPMBITRATE	<PSI5n_base> + 0024_H
PSI5 operating-mode cycle time register	PSI5nOPMCYCT	<PSI5n_base> + 0028_H
PSI5 interrupt status register	PSI5nPSI5INT	<PSI5n_base> + 0030_H
PSI5 receive data emulation register	PSI5nEMRXDATA	<PSI5n_base> + 0040_H
PSI5 receive data status emulation register	PSI5nEMRXDST	<PSI5n_base> + 0044_H
PSI5 receive data IP timer emulation register	PSI5nEMRXDTIM	<PSI5n_base> + 0048_H
PSI5 receive data FIFO emulation register	PSI5nEMRXDFIFO	<PSI5n_base> + $004C_H$
PSI5 receive-message receive message emulation register	PSI5nEMRXMRXMSG	<PSI5n_base> + 0050_H
PSI5 receive-message channel receive status emulation register	PSI5nEMRXMRXST	<PSI5n_base> + 0054_H
PSI5 receive-message receive timestamp emulation register	PSI5nEMRXMRXTIM	<PSI5n_base> + 0058_H
PSI5 receive-message channel FIFO emulation register	PSI5nEMRXMFIFO	<PSI5n_base> + $005C_H$
PSI5 transmission setting register	PSI5nTXSETTING	<PSI5n_base> + 0080_H
PSI5 synchronization control register	PSI5nSYNCCTRL	<PSI5n_base> + 0084_H
PSI5 transmission status register	PSI5nTXST	<PSI5n_base> + 0088_H
PSI5 transmission status clear register	PSI5nTXSTCLR	<PSI5n_base> + $008C_H$
PSI5 transmission status interrupt enable register	PSI5nTXSTINTEN	<PSI5n_base> + 0090_H
PSI5 transmit data control register	PSI5nTXDCTRL	<PSI5n_base> + 0094_H
PSI5 transmit data register	PSI5nTXDATA	<PSI5n_base> + 0098_H
PSI5 receive sampling setting register	PSI5nRXSPLSET	<PSI5n_base> + 0100_H
PSI5 receive slot 1 setting register	PSI5nRXS1SET	<PSI5n_base> + 0108_H
PSI5 receive slot 2 setting register	PSI5nRXS2SET	<PSI5n_base> + $010C_H$
PSI5 receive slot 3 setting register	PSI5nRXS3SET	<PSI5n_base> + 0110_H
PSI5 receive slot 4 setting register	PSI5nRXS4SET	<PSI5n_base> + 0114_H
PSI5 receive slot 5 setting register	PSI5nRXS5SET	<PSI5n_base> + 0118_H
PSI5 receive slot 6 setting register	PSI5nRXS6SET	<PSI5n_base> + $011C_H$
PSI5 receive slot 7 setting register	PSI5nRXS7SET	<PSI5n_base> + 0120_H
PSI5 receive slot 8 setting register	PSI5nRXS8SET	<PSI5n_base> + 0124_H
PSI5 receive data register	PSI5nRXDATA	<PSI5n_base> + 0128_H
PSI5 receive data status register	PSI5nRXDST	<PSI5n_base> + $012C_H$
PSI5 receive data IP timer register	PSI5nRXDTIM	<PSI5n_base> + 0130_H
PSI5 receive data FIFO register	PSI5nRXDFIFO	<PSI5n_base> + 0134_H
PSI5 receive module status register	PSI5nRXMODST	<PSI5n_base> + 0138_H
PSI5 receive module status clear register	PSI5nRXMODSTCLR	<PSI5n_base> + $013C_H$
PSI5 receive module status interrupt enable register	PSI5nRXMODSTINTEN	<PSI5n_base> + 0140_H
PSI5 receive message channel setting register	PSI5nRXMSET	<PSI5n_base> + 0180_H
PSI5 receive-message receive message register	PSI5nRXMRXMSG	<PSI5n_base> + 0184_H

Table 20.8 PSI5n Register Overview (2/2)

Register Name	Symbol	Address
PSI5 receive-message channel receive status register	PSI5nRXMRXST	<PSI5n_base> + 0188_H
PSI5 receive-message channel receive timestamp register	PSI5nRXMRXTIM	<PSI5n_base> + $018C_H$
PSI5 receive-message channel FIFO register	PSI5nRXMFIFO	<PSI5n_base> + 0190_H
PSI5 receive-message channel module status register	PSI5nRXMMST	<PSI5n_base> + 0194_H
PSI5 receive-message channel module status clear register	PSI5nRXMMSTCLR	<PSI5n_base> + 0198_H
PSI5 receive-message channel module status interrupt enable register	PSI5nRXMMSTINTEN	<PSI5n_base> + $019C_H$
PSI5 timestamp function mode selection register	PSI5TSSEL	<PSI50_base> + 3000_H

20.3.1 PSI5nCHCTRL — PSI5 Channel Control Register

This register controls the channel operation.

Access: This register can be read/written in 32-bit units.

Address: <PSI5n_base> + 0000_H

Value after reset: $0000\ 0000_H$ This register is initialized by any reset source.

Bit	31	30	29	28	27	26	25	24	23	22	21	20	19	18	17	16
	—	—	—	—	—	—	—	—	—	—	—	—	—	—	—	—
Value after reset	0	0	0	0	0	0	0	0	0	0	0	0	0	0	0	0
R/W	R	R	R	R	R	R	R	R	R	R	R	R	R	R	R	R

Bit	15	14	13	12	11	10	9	8	7	6	5	4	3	2	1	0
	—	—	—	—	—	—	—	—	—	—	—	—	—	—	—	CHEN
Value after reset	0	0	0	0	0	0	0	0	0	0	0	0	0	0	0	0
R/W	R	R	R	R	R	R	R	R	R	R	R	R	R	R	R	R/W

Table 20.9 PSI5nCHCTRL Register Contents

Bit Position	Bit Name	Function
31 to 1	Reserved	When read, the value after reset is read. When writing, write the value after reset.
0	CHEN	Channel Enable 0: Channel disabled 1: Channel enabled In synchronous mode, the PSI5 starts to send a synchronization pulse after enabling the channel. In asynchronous mode, the PSI5 sets psi5_tx_data according to PSI5nTXSETTING.DEFTXVAL. When the channel is enabled, writing to the following registers is disabled: PSI5nOPMCOMM, PSI5nOPMBITRATE, PSI5nOPMCYCT, PSI5nTXSETTING, PSI5nRXSPLSET, PSI5nRXSmSET, and PSI5nRXMSET After writing to this bit, check that the setting is reflected by reading the bit by software.

CAUTION

The following registers must be set only when channel operation is enabled (PSI5nCHCTRL.CHEN = 1).

- PSI5nRXMODSTINTEN.RXDEXISTINTEN = 1
- PSI5nTXSTINTEN.TXDEMPTYINTEN = 1
- PSI5nTXDATA.TXDATA

20.3.2 PSI5nIPTIMERCTRL — PSI5 IP Timer Control Register

This register controls the IP timer.

Access: This register can be read/written in 32-bit units.

Address: <PSI5n_base> + 0010_H

Value after reset: $0001\ 0000_H$ This register is initialized by any reset source.

Bit	31	30	29	28	27	26	25	24	23	22	21	20	19	18	17	16
	—	—	—	—	—	—	—	—	—	—	—	—	—	—	—	MSTSLV
Value after reset	0	0	0	0	0	0	0	0	0	0	0	0	0	0	0	1
R/W	R	R	R	R	R	R	R	R	R	R	R	R	R	R	R	R/W

Bit	15	14	13	12	11	10	9	8	7	6	5	4	3	2	1	0
	—	—	—	—	—	—	—	TSCLR	—	—	—	—	—	—	—	IPTIMEN
Value after reset	0	0	0	0	0	0	0	0	0	0	0	0	0	0	0	0
R/W	R	R	R	R	R	R	R	R/W	R	R	R	R	R	R	R	R/W

Table 20.10 PSI5nIPTIMERCTRL Register Contents

Bit Position	Bit Name	Function
31 to 17	Reserved	When read, the value after reset is read. When writing, write the value after reset.
16	MSTSLV	Specifies timer master/slave mode. 0: Slave mode is selected 1: Master mode is selected • In slave mode: The IP timer counts up according to the count-up timing signal (psi5_ts_tick_in) input through the master channel. The value of the PSI5nIPTIME register is cleared when the TSCLR bit is set or in response to the input of the clearing timing signal (psi5_ts_clr_in) through the master channel. • In master mode: IPTIMER counts up in response to the clock generated by the internal baud rate generator. PSI5 outputs the count-up timing signal (psi5_ts_tick_out). Setting the TSCLR bit to 1 clears the values in PSI5nIPTIMER (the clearing timing signal (psi5_ts_clr_out) is output).
15 to 9	Reserved	When read, the value after reset is read. When writing, write the value after reset.
8	TSCLR	IP Timer Clear Trigger 0: The IP timer (PSI5nIPTIME register) is not cleared. 1: The IP timer (PSI5nIPTIME register) is cleared. The TSCLR bit setting is valid when the MSTSLV bit is set to 1. When read always read as 0.
7 to 1	Reserved	When read, the value after reset is read. When writing, write the value after reset.
0	IPTIMEN	IP Timer Enable 0: IP timer is disabled. 1: IP timer is enabled. In slave mode, set the IPTIMEN bit after enabling the IP timer of the master channel.

20.3.3 PSI5nIPTIMER — PSI5 IP Timer Counter

This is a counter for the IP timer.

Access: This register can be read/written in 32-bit units.

Address: <PSI5n_base> + 0014_H

Value after reset: $0000\ 0000_H$ This register is initialized by any reset source.

Bit	31	30	29	28	27	26	25	24	23	22	21	20	19	18	17	16
	COUNTVAL[31:16]															
Value after reset	0	0	0	0	0	0	0	0	0	0	0	0	0	0	0	0
R/W	R/W	R/W	R/W	R/W	R/W	R/W	R/W	R/W	R/W	R/W	R/W	R/W	R/W	R/W	R/W	R/W

Bit	15	14	13	12	11	10	9	8	7	6	5	4	3	2	1	0
	COUNTVAL[15:0]															
Value after reset	0	0	0	0	0	0	0	0	0	0	0	0	0	0	0	0
R/W	R/W	R/W	R/W	R/W	R/W	R/W	R/W	R/W	R/W	R/W	R/W	R/W	R/W	R/W	R/W	R/W

Table 20.11 PSI5nIPTIMER Register Contents

Bit Position	Bit Name	Function
31 to 0	COUNTVAL	In master mode, this timer counts up in response to the internal baud rate clock. In slave mode, this timer counts up in response to the input of the count-up timing signal (psi5_ts_tick_in) through the master channel.

20.3.4 PSI5nOPMCOMM — PSI5 Operating Mode/Communication Mode Register

This register sets the communication mode.

Access: This register can be read/written in 32-bit units.

Address: <PSI5n_base> + 0020_H

Value after reset: $0000\ 0000_H$ This register is initialized by any reset source.

Bit	31	30	29	28	27	26	25	24	23	22	21	20	19	18	17	16
	—	—	—	—	—	—	—	—	—	—	—	—	—	—	—	—
Value after reset	0	0	0	0	0	0	0	0	0	0	0	0	0	0	0	0
R/W	R	R	R	R	R	R	R	R	R	R	R	R	R	R	R	R

Bit	15	14	13	12	11	10	9	8	7	6	5	4	3	2	1	0
	—	—	—	—	—	—	—	—	—	—	—	—	—	COMMODE		
Value after reset	0	0	0	0	0	0	0	0	0	0	0	0	0	0	0	0
R/W	R	R	R	R	R	R	R	R	R	R	R	R	R	R/W	R/W	R/W

Table 20.12 PSI5nOPMCOMM Register Contents

Bit Position	Bit Name	Function
31 to 3	Reserved	When read, the value after reset is read. When writing, write the value after reset.
2 to 0	COMMODE	Specify communication mode. 000_B: Asynchronous mode 001_B: Synchronous Parallel Bus Mode 010_B: Synchronous Universal Bus Mode 011_B: Synchronous Daisy Chain Bus Mode 100_B: Variable Time Triggered Synchronous Operation Mode Other than above: Setting prohibited

20.3.5 PSI5nOPMBITRATE — PSI5 Operating-Mode Bit Rate Register

This register sets a bit rate.

Access: This register can be read/written in 32-bit units.

Address: <PSI5n_base> + 0024_H

Value after reset: $0000\ 029F_H$ This register is initialized by any reset source.

Bit	31	30	29	28	27	26	25	24	23	22	21	20	19	18	17	16
	—	—	—	—	—	—	—	—	—	—	—	—	—	—	—	—
Value after reset	0	0	0	0	0	0	0	0	0	0	0	0	0	0	0	0
R/W	R	R	R	R	R	R	R	R	R	R	R	R	R	R	R	R

Bit	15	14	13	12	11	10	9	8	7	6	5	4	3	2	1	0
	BITRATECNT															
Value after reset	0	0	0	0	0	0	1	0	1	0	0	1	1	1	1	1
R/W	R/W	R/W	R/W	R/W	R/W	R/W	R/W	R/W	R/W	R/W	R/W	R/W	R/W	R/W	R/W	R/W

Table 20.13 PSI5nOPMBITRATE Register Contents

Bit Position	Bit Name	Function
31 to 16	Reserved	When read, the value after reset is read. When writing, write the value after reset.
15 to 0	BITRATECNT	Specify the 1-bit clock count considering communication clock tolerance. • For transfer at 80 MHz (12.5 ns) and 125 Kbps (clock tolerance: 5%: 8.4 μs) psi5_com_clk is used as the counter clock. Counting cycle = 8.4 μs/12.5 ns = 672 = $2A0_H$ Setting value: $2A0\text{-}001_H = 29F_H$ This value is used to secure the bit length while no edge is detected in bit judgment.

20.3.6 PSI5nOPMCYCT — PSI5 Operating-Mode Cycle Time Register

This register sets a count value.

Access: This register can be read/written in 32-bit units.

Address: <PSI5n_base> + 0028_H

Value after reset: 0000 $9C3F_H$ This register is initialized by any reset source.

Bit	31	30	29	28	27	26	25	24	23	22	21	20	19	18	17	16
	—	—	—	—	—	—	—	—	—	—	—	—	TTTTCNT			
Value after reset	0	0	0	0	0	0	0	0	0	0	0	0	0	0	0	0
R/W	R	R	R	R	R	R	R	R	R	R	R	R	R	R	R	R

Bit	15	14	13	12	11	10	9	8	7	6	5	4	3	2	1	0
	TTTTCNT															
Value after reset	1	0	0	1	1	1	0	0	0	0	1	1	1	1	1	1
R/W	R/W	R/W	R/W	R/W	R/W	R/W	R/W	R/W	R/W	R/W	R/W	R/W	R/W	R/W	R/W	R/W

Table 20.14 PSI5nOPMCYCT Register Contents

Bit Position	Bit Name	Function
31 to 20	Reserved	When read, the value after reset is read. When writing, write the value after reset.
19 to 0	TTTTCNT	Specify the count value. Specify the count value for the SYNC signal's period. Use psi5_com_clk as the count clock. The default value is 500 μs when counting at 80 MHz (T = 12.5 ns). Count cycle: 500 μs / 12.5 ns = 40000 = $9C40_H$ Setting value: $9C40_H$-001_H = $9C3F_H$

20.3.7 PSI5nPSI5INT — PSI5 Interrupt Status Register

This register indicates the status of an interrupt that occurred in the PSI5.

Access: This register can be read in 32-bit units.

Address: <PSI5n_base> + 0030_H

Value after reset: $0000\ 0000_H$ This register is initialized by any reset source.

Bit	31	30	29	28	27	26	25	24	23	22	21	20	19	18	17	16
	—	—	—	—	—	—	—	—	—	—	—	—	—	INT_SYNCED	INT_SYNCST	INT_TXDEMPTY
Value after reset	0	0	0	0	0	0	0	0	0	0	0	0	0	0	0	0
R/W	R	R	R	R	R	R	R	R	R	R	R	R	R	R	R	R

Bit	15	14	13	12	11	10	9	8	7	6	5	4	3	2	1	0
	—	—	—	—	—	—	—	—	—	INT_RXDSCNFERR	INT_RXDERR	INT_RXDFOVF	INT_RXDEXIST	INT_RXMERR	INT_RXMFOVF	INT_RXMEXIST
Value after reset	0	0	0	0	0	0	0	0	0	0	0	0	0	0	0	0
R/W	R	R	R	R	R	R	R	R	R	R	R	R	R	R	R	R

Table 20.15 PSI5nPSI5INT Register Contents

Bit Position	Bit Name	Function
31 to 19	Reserved	When read, the value after reset is read.
18	INT_SYNCED	INT_SYNCED interrupt generation 0: Was not generated 1: Generated
17	INT_SYNCST	INT_SYNCST interrupt generation 0: Was not generated 1: Generated
16	INT_TXDEMPTY	INT_TXDEMPTY interrupt generation 0: Was not generated 1: Generated
15 to 7	Reserved	When read, the value after reset is read.
6	INT_RXDSCNFERR	INT_RXDSCNFERR interrupt generation 0: Was not generated 1: Generated
5	INT_RXDERR	INT_RXDERR interrupt generation 0: Was not generated 1: Generated
4	INT_RXDFOVF	INT_RXDFOVF interrupt generation 0: Was not generated 1: Generated
3	INT_RXDEXIST	INT_RXDEXIST interrupt generation 0: Was not generated 1: Generated
2	INT_RXMERR	INT_RXMERR interrupt generation 0: Was not generated 1: Generated
1	INT_RXMFOVF	INT_RXMFOVF interrupt generation 0: Was not generated 1: Generated
0	INT_RXMEXIST	INT_RXMEXIST interrupt generation 0: Was not generated 1: Generated

NOTE

For details about interrupts in the PSI5, see **Section 20.4, Interrupt**.

20.3.8 PSI5nEMRXDATA — PSI5 Receive Data Emulation Register

This is a mirror register of the receive data register (PSI5nRXDATA).

For details on PSI5nRXDATA, see **Section 20.3.25, PSI5nRXDATA — PSI5 Receive Data Register**.

Access: This register can be read in 32-bit units.

Address: <PSI5n_base> + 0040_H

Value after reset: $0000\ 0000_H$ This register is initialized by any reset source.

Bit	31	30	29	28	27	26	25	24	23	22	21	20	19	18	17	16
	RXDATA															
Value after reset	0	0	0	0	0	0	0	0	0	0	0	0	0	0	0	0
R/W	R	R	R	R	R	R	R	R	R	R	R	R	R	R	R	R

Bit	15	14	13	12	11	10	9	8	7	6	5	4	3	2	1	0
	RXDATA															
Value after reset	0	0	0	0	0	0	0	0	0	0	0	0	0	0	0	0
R/W	R	R	R	R	R	R	R	R	R	R	R	R	R	R	R	R

Table 20.16 PSI5nEMRXDATA Register Contents

Bit Position	Bit Name	Function
31 to 0	RXDATA	Mirror data of PSI5nRXDATA. Data is not updated even if it is read.

20.3.9 PSI5nEMRXDST — PSI5 Receive Data Status Emulation Register

This is a mirror register of the receive data status register (PSI5nRXDST).

For details on PSI5nRXDST, see **Section 20.3.26, PSI5nRXDST — PSI5 Receive Data Status Register**.

Access: This register can be read in 32-bit units.

Address: <PSI5n_base> + 0044_H

Value after reset: $0000\ 0000_H$ This register is initialized by any reset source.

Bit	31	30	29	28	27	26	25	24	23	22	21	20	19	18	17	16
	—	—	—	—	—	—	—	—	—	—	—	—	—	—	—	—
Value after reset	0	0	0	0	0	0	0	0	0	0	0	0	0	0	0	0
R/W	R	R	R	R	R	R	R	R	R	R	R	R	R	R	R	R

Bit	15	14	13	12	11	10	9	8	7	6	5	4	3	2	1	0
	—	—	—	—	—	RXCHKD			RXSLOTNUM				—	—	—	RXSTATUS
Value after reset	0	0	0	0	0	0	0	0	0	0	0	0	0	0	0	0
R/W	R	R	R	R	R	R	R	R	R	R	R	R	R	R	R	R

Table 20.17 PSI5nEMRXDST Register Contents

Bit Position	Bit Name	Function
30 to 11	Reserved	When read, the value after reset is read.
10 to 8	RXCHKD	These bits act as mirrors of the PSI5nRXDST.RXCHKD bits. Data is not updated even if it is read.
7 to 4	RXSLOTNUM	These bits act as mirrors of the PSI5nRXDST.RXSLOTNUM bits. Data is not updated even if it is read.
3 to 1	Reserved	When read, the value after reset is read.
0	RXSTATUS	This bit acts as a mirror of the PSI5nRXDST.RXSTATUS bit. Data is not updated even if it is read.

20.3.10 PSI5nEMRXDTIM — PSI5 Receive Data IP Timer Emulation Register

This is a mirror register of the receive data IP timer register (PSI5nRXDTIM).

For details on PSI5nRXDTIM, see **Section 20.3.27, PSI5nRXDTIM — PSI5 Receive Data IP Timer Register**.

Access: This register can be read in 32-bit units.

Address: <PSI5n_base> + 0048_H

Value after reset: $0000\ 0000_H$ This register is initialized by any reset source.

Bit	31	30	29	28	27	26	25	24	23	22	21	20	19	18	17	16
	RXDTIM															
Value after reset	0	0	0	0	0	0	0	0	0	0	0	0	0	0	0	0
R/W	R	R	R	R	R	R	R	R	R	R	R	R	R	R	R	R

Bit	15	14	13	12	11	10	9	8	7	6	5	4	3	2	1	0
	RXDTIM															
Value after reset	0	0	0	0	0	0	0	0	0	0	0	0	0	0	0	0
R/W	R	R	R	R	R	R	R	R	R	R	R	R	R	R	R	R

Table 20.18 PSI5nEMRXDTIM Register Contents

Bit Position	Bit Name	Function
31 to 0	RXDTIM	Mirror data of the PSI5nRXDTIM register. Data is not updated even if it is read.

20.3.11 PSI5nEMRXDFIFO — PSI5 Receive Data FIFO Emulation Register

This is a mirror register of the receive data FIFO register (PSI5nRXDFIFO).

For details on PSI5nRXDFIFO, see **Section 20.3.28, PSI5nRXDFIFO — PSI5 Receive Data FIFO Register**.

Access: This register can be read in 32-bit units.

Address: <PSI5n_base> + $004C_H$

Value after reset: $0000\ 0000_H$ This register is initialized by any reset source.

Bit	31	30	29	28	27	26	25	24	23	22	21	20	19	18	17	16
	RXDST															
Value after reset	0	0	0	0	0	0	0	0	0	0	0	0	0	0	0	0
R/W	R	R	R	R	R	R	R	R	R	R	R	R	R	R	R	R

Bit	15	14	13	12	11	10	9	8	7	6	5	4	3	2	1	0
	RXDST															
Value after reset	0	0	0	0	0	0	0	0	0	0	0	0	0	0	0	0
R/W	R	R	R	R	R	R	R	R	R	R	R	R	R	R	R	R

Table 20.19 PSI5nEMRXDFIFO Register Contents

Bit Position	Bit Name	Function
31 to 0	RXDST	Mirror data of the PSI5nRXDFIFO register. Data is not updated even if it is read.

20.3.12 PSI5nEMRXMRXMSG — PSI5 Receive-Message Receive Message Emulation Register

This is a mirror register of the receive-message receive message register (PSI5nRXMRXMSG).

For details on PSI5nRXMRXMSG, see **Section 20.3.33, PSI5nRXMRXMSG — PSI5 Receive-Message Receive Message Register**.

Access: This register can be read in 32-bit units.

Address: <PSI5n_base> + 0050_H

Value after reset: $0000\ 0000_H$ This register is initialized by any reset source.

Bit	31	30	29	28	27	26	25	24	23	22	21	20	19	18	17	16
	CONFIGBIT	—	—	—	—	—	—	—	SERIALID							
Value after reset	0	0	0	0	0	0	0	0	0	0	0	0	0	0	0	0
R/W	R	R	R	R	R	R	R	R	R	R	R	R	R	R	R	R

Bit	15	14	13	12	11	10	9	8	7	6	5	4	3	2	1	0
	DATAFIELD															
Value after reset	0	0	0	0	0	0	0	0	0	0	0	0	0	0	0	0
R/W	R	R	R	R	R	R	R	R	R	R	R	R	R	R	R	R

Table 20.20 PSI5nEMRXMRXMSG Register Contents

Bit Position	Bit Name	Function
31	CONFIGBIT	This bit acts as a mirror of the PSI5nRXMRXMSG.CONFIGBIT bit. Data is not updated even if it is read.
30 to 24	Reserved	When read, the value after reset is read.
23 to 16	SERIALID	These bits act as mirrors of the PSI5nRXMRXMSG.SERIALID bits. Data is not updated even if it is read.
15 to 0	DATAFIELD	These bits act as mirrors of the PSI5nRXMRXMSG.DATAFIELD bits. Data is not updated even if it is read.

20.3.13 PSI5nEMRXMRXST — PSI5 Receive-Message Channel Receive Status Emulation Register

This is a mirror register of the receive-message channel receive status register (PSI5nRXMRXST).

For details on PSI5nRXMRXST, see **Section 20.3.34, PSI5nRXMRXST — PSI5 Receive-message Channel Receive Status Register**.

Access: This register can be read in 32-bit units.

Address: <PSI5n_base> + 0054_H

Value after reset: $0000\ 0000_H$ This register is initialized by any reset source.

Bit	31	30	29	28	27	26	25	24	23	22	21	20	19	18	17	16
	—	—	—	—	—	—	—	—	—	—	—	—	—	RXSYNC		
Value after reset	0	0	0	0	0	0	0	0	0	0	0	0	0	0	0	0
R/W	R	R	R	R	R	R	R	R	R	R	R	R	R	R	R	R

Bit	15	14	13	12	11	10	9	8	7	6	5	4	3	2	1	0
	—	—	RXCRC						SLOTNUM				—	—	—	RXSTATUS
Value after reset	0	0	0	0	0	0	0	0	0	0	0	0	0	0	0	0
R/W	R	R	R	R	R	R	R	R	R	R	R	R	R	R	R	R

Table 20.21 PSI5nEMRXMRXST Register Contents

Bit Position	Bit Name	Function
30 to 19	Reserved	When read, the value after reset is read.
18 to 16	RXSYNC	These bits act as mirrors of the PSI5nRXMRXST.RXSYNC bits. Data is not updated even if it is read.
15, 14	Reserved	When read, the value after reset is read.
13 to 8	RXCRC	These bits act as mirrors of the PSI5nRXMRXST.RXCRC bits. Data is not updated even if it is read.
7 to 4	SLOTNUM	These bits act as mirrors of the PSI5nRXMRXST.SLOTNUM bits. Data is not updated even if it is read.
3 to 1	Reserved	When read, the value after reset is read.
0	RXSTATUS	This bit acts as a mirror of the PSI5nRXMRXST.RXSTATUS bit. Data is not updated even if it is read.

20.3.14 PSI5nEMRXMRXTIM — PSI5 Receive-Message Receive Timestamp Emulation Register

This is a mirror register of the receive-message channel receive timestamp register (PSI5nRXMRXTIM).

For details on PSI5nRXMRXTIM, see **Section 20.3.35, PSI5nRXMRXTIM — PSI5 Receive-message Channel Receive Timestamp Register**.

Access: This register can be read in 32-bit units.

Address: <PSI5n_base> + 0058_H

Value after reset: $0000\ 0000_H$ This register is initialized by any reset source.

Bit	31	30	29	28	27	26	25	24	23	22	21	20	19	18	17	16
	RXMTIM															
Value after reset	0	0	0	0	0	0	0	0	0	0	0	0	0	0	0	0
R/W	R	R	R	R	R	R	R	R	R	R	R	R	R	R	R	R

Bit	15	14	13	12	11	10	9	8	7	6	5	4	3	2	1	0
	RXMTIM															
Value after reset	0	0	0	0	0	0	0	0	0	0	0	0	0	0	0	0
R/W	R	R	R	R	R	R	R	R	R	R	R	R	R	R	R	R

Table 20.22 PSI5nEMRXMRXTIM Register Contents

Bit Position	Bit Name	Function
31 to 0	RXMTIM	Mirror data of the PSI5nRXMRXTIM register. Data is not updated even if it is read.

20.3.15 PSI5nEMRXMFIFO — PSI5 Receive-Message Channel FIFO Emulation Register

This is a mirror register of the receive-message channel FIFO register (PSI5nRXMFIFO).

For details on PSI5nRXMFIFO, see **Section 20.3.36, PSI5nRXMFIFO — PSI5 Receive-message Channel FIFO Register**.

Access: This register can be read in 32-bit units.

Address: <PSI5n_base> + $005C_H$

Value after reset: $0000\ 0000_H$ This register is initialized by any reset source.

Bit	31	30	29	28	27	26	25	24	23	22	21	20	19	18	17	16
	RXMFIFO															
Value after reset	0	0	0	0	0	0	0	0	0	0	0	0	0	0	0	0
R/W	R	R	R	R	R	R	R	R	R	R	R	R	R	R	R	R

Bit	15	14	13	12	11	10	9	8	7	6	5	4	3	2	1	0
	RXMFIFO															
Value after reset	0	0	0	0	0	0	0	0	0	0	0	0	0	0	0	0
R/W	R	R	R	R	R	R	R	R	R	R	R	R	R	R	R	R

Table 20.23 PSI5nEMRXMFIFO Register Contents

Bit Position	Bit Name	Function
31 to 0	RXMFIFO	Mirror data of the PSI5nRXMFIFO register. Data is not updated even if it is read.

20.3.16 PSI5nTXSETTING — PSI5 Transmission Setting Register

This register specifies transmission settings.

Access: This register can be read/written in 32-bit units.

Address: <PSI5n_base> + 0080_H

Value after reset: $1067\ 47F7_H$ This register is initialized by any reset source.

Bit	31	30	29	28	27	26	25	24	23	22	21	20	19	18	17	16
	LONGCNT															
Value after reset	0	0	0	1	0	0	0	0	0	1	1	0	0	1	1	1
R/W	R/W	R/W	R/W	R/W	R/W	R/W	R/W	R/W	R/W	R/W	R/W	R/W	R/W	R/W	R/W	R/W

Bit	15	14	13	12	11	10	9	8	7	6	5	4	3	2	1	0
	PHY MODE	DEF TXVAL	SHORTCNT													
Value after reset	0	1	0	0	0	1	1	1	1	1	1	1	0	1	1	1
R/W	R/W	R/W	R/W	R/W	R/W	R/W	R/W	R/W	R/W	R/W	R/W	R/W	R/W	R/W	R/W	R/W

Table 20.24 PSI5nTXSETTING Register Contents

Bit Position	Bit Name	Function
31 to 16	LONGCNT	Set the allowable upper limit of “long” synchronization pulse width when synchronous signal is output in the Pulse Width method. The upper limit when psi5_com_clk is at 80 MHz is 52.5 μs. Counting cycle: 52.5 μs / 12.5 ns = 4200 = 1068_H Setting value:1068_H- 0001_H = 1067_H
15	PHYMODE	Specifies synchronous pulse PHY layer mode. 0: Tooth Gap method is selected. 1: Pulse Width method is selected. The pulse width should comply with the value within the pulse width specified by the SHORTCNT bits in the Tooth Gap method.
14	DEFTXVAL	Specifies the initial value of synchronization pulse when data is not transmitted. 0: (0) is transmitted. 1: (1) is transmitted.
13 to 0	SHORTCNT	Set the allowable upper limit of “short” synchronization pulse width when synchronous signal is output in the Pulse Width or Tooth Gap method. The upper limit when psi5_com_clk is at 80 MHz is 25.5 μs. Counting cycle: 25.5 μs / 12.5 ns = 2040 = $07F8_H$ Setting value: $07F8_H$- 0001_H = $07F7_H$

CAUTION

- The PSI5nTXSETTING.SHORTCNT bit must be set to 1 or higher.
- The setting value below should be used.
  PSI5nOPMCYCT.TTTTCNT > PSI5nTXSETTING.LONGCNT > PSI5nTXSETTING.SHORTCNT

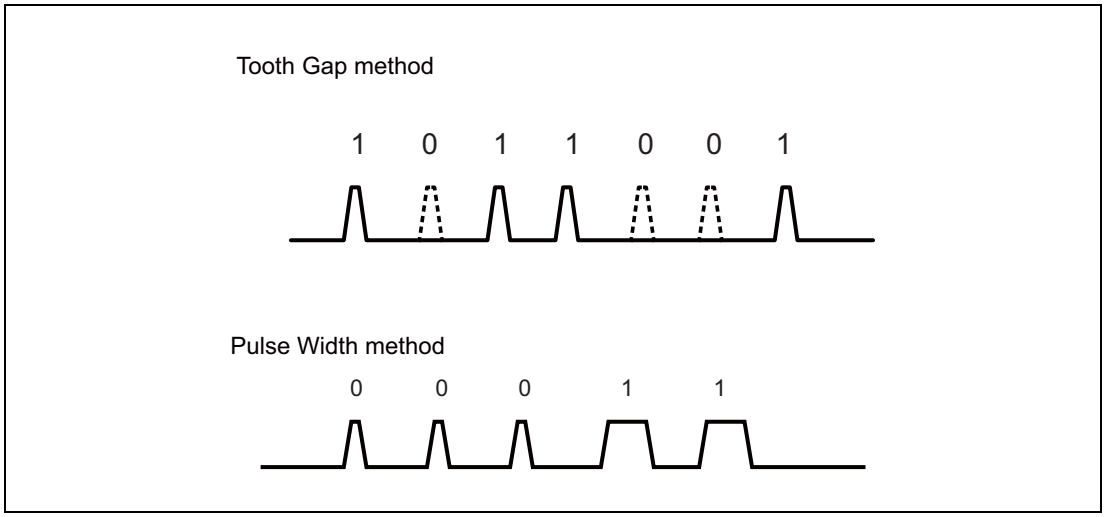

Figure 20.2 Pulse Width Method and Tooth Gap Method

20.3.17 PSI5nSYNCCTRL — PSI5 Synchronization Control Register

This register controls the start trigger in variable time triggered synchronous operation mode.

Access: This register can be read/written in 32-bit units.

Address: <PSI5n_base> + 0084_H

Value after reset: $0000\ 0000_H$ This register is initialized by any reset source.

Bit	31	30	29	28	27	26	25	24	23	22	21	20	19	18	17	16
	—	—	—	—	—	—	—	—	—	—	—	—	—	—	—	—
Value after reset	0	0	0	0	0	0	0	0	0	0	0	0	0	0	0	0
R/W	R	R	R	R	R	R	R	R	R	R	R	R	R	R	R	R

Bit	15	14	13	12	11	10	9	8	7	6	5	4	3	2	1	0
	—	—	—	—	—	—	—	—	—	—	—	—	—	—	—	VALTIM SYNC
Value after reset	0	0	0	0	0	0	0	0	0	0	0	0	0	0	0	0
R/W	R	R	R	R	R	R	R	R	R	R	R	R	R	R	R	R/W

Table 20.25 PSI5nSYNCCTRL Register Contents

Bit Position	Bit Name	Function
31 to 1	Reserved	When read, the value after reset is read. When writing, write the value after reset.
0	VALTIMSYNC	Synchronization signal send trigger in variable time triggered synchronous operation mode 0: Not effective. 1: The synchronization pulse is issued. This bit is always 0 when it is read. Do not write 1 to the VALTIMSYNC bit in any modes other than variable time triggered synchronous operation mode.

20.3.18 PSI5nTXST — PSI5 Transmission Status Register

This register indicates the transmission status.

Access: This register can be read in 32-bit units.

Address: <PSI5n_base> + 0088_H

Value after reset: $0000\ 0001_H$ This register is initialized by any reset source.

Bit	31	30	29	28	27	26	25	24	23	22	21	20	19	18	17	16
	—	—	—	—	—	—	—	—	—	—	—	—	—	—	—	—
Value after reset	0	0	0	0	0	0	0	0	0	0	0	0	0	0	0	0
R/W	R	R	R	R	R	R	R	R	R	R	R	R	R	R	R	R

Bit	15	14	13	12	11	10	9	8	7	6	5	4	3	2	1	0
	—	—	—	—	—	—	SYNCED	SYNCST	—	—	—	—	—	—	—	TXDEMPTY
Value after reset	0	0	0	0	0	0	0	0	0	0	0	0	0	0	0	1
R/W	R	R	R	R	R	R	R	R	R	R	R	R	R	R	R	R

Table 20.26 PSI5nTXST Register Contents

Bit Position	Bit Name	Function
31 to 10	Reserved	When read, the value after reset is read.
9	SYNCED	Indicates synchronization signal transmit complete. 0: Synchronization signal transmit is not started or is incomplete. 1: Synchronization signal transmit is complete. When the SYNCED bit is set, the INT_SYNCED interrupt is asserted. The SYNCED bit is set even when 0 is sent in the Tooth Gap method.
8	SYNCST	Indicates start of synchronization signal transmit 0: Synchronization signal is not sent. 1: Synchronization signal is started to send. When the SYNCST bit is set, the INT_SYNCST interrupt is asserted. The SYNCST bit is set even when 0 is sent in the Tooth Gap method.
7 to 1	Reserved	When read, the value after reset is read.
0	TXDEMPTY	Indicates Tx data buffer empty status. 0: Transmit data buffer is not empty 1: Transmit data buffer is empty When the TXDEMPTY bit is set, the INT_TXDEMPTY interrupt is asserted.

20.3.19 PSI5nTXSTCLR — PSI5 Transmission Status Clear Register

This register clears the setting in the PSI5nTXST register.

Access: This register can be read/written in 32-bit units.

Address: <PSI5n_base> + $008C_H$

Value after reset: $0000\ 0000_H$ This register is initialized by any reset source.

Bit	31	30	29	28	27	26	25	24	23	22	21	20	19	18	17	16
	—	—	—	—	—	—	—	—	—	—	—	—	—	—	—	—
Value after reset	0	0	0	0	0	0	0	0	0	0	0	0	0	0	0	0
R/W	R	R	R	R	R	R	R	R	R	R	R	R	R	R	R	R

Bit	15	14	13	12	11	10	9	8	7	6	5	4	3	2	1	0
	—	—	—	—	—	—	SYNC EDCLR	SYNC STCLR	—	—	—	—	—	—	—	—
Value after reset	0	0	0	0	0	0	0	0	0	0	0	0	0	0	0	0
R/W	R	R	R	R	R	R	R/W	R/W	R	R	R	R	R	R	R	R

Table 20.27 PSI5nTXSTCLR Register Contents

Bit Position	Bit Name	Function
31 to 10	Reserved	When read, the value after reset is read. When writing, write the value after reset.
9	SYNCEDCLR	Clears the value of the PSI5nTXST.SYNCED bit. 0: No operation is done. The read value is always 0. 1: Clears the value of the PSI5nTXST.SYNCED bit
8	SYNCSTCLR	Clears the value of the PSI5nTXST.SYNCST bit. 0: No operation is done. The read value is always 0. 1: Clears the value of the PSI5nTXST.SYNCST bit.
7 to 0	Reserved	When read, the value after reset is read. When writing, write the value after reset.

20.3.20 PSI5nTXSTINTEN — PSI5 Transmission Status Interrupt Enable Register

This register controls transmission status interrupts.

Access: This register can be read/written in 32-bit units.

Address: <PSI5n_base> + 0090_H

Value after reset: $0000\ 0000_H$ This register is initialized by any reset source.

Bit	31	30	29	28	27	26	25	24	23	22	21	20	19	18	17	16
	—	—	—	—	—	—	—	—	—	—	—	—	—	—	—	—
Value after reset	0	0	0	0	0	0	0	0	0	0	0	0	0	0	0	0
R/W	R	R	R	R	R	R	R	R	R	R	R	R	R	R	R	R

Bit	15	14	13	12	11	10	9	8	7	6	5	4	3	2	1	0
	—	—	—	—	—	—	SYNCEDINTEN	SYNCSTINTEN	—	—	—	—	—	—	—	TXDEMPTYINTEN
Value after reset	0	0	0	0	0	0	0	0	0	0	0	0	0	0	0	0
R/W	R	R	R	R	R	R	R/W	R/W	R	R	R	R	R	R	R	R/W

Table 20.28 TXSINTEN Register Contents

Bit Position	Bit Name	Function
31 to 10	Reserved	When read, the value after reset is read. When writing, write the value after reset.
9	SYNCED INTEN	Controls the INT_SYNCED interrupt. 0: Interrupt disabled (Masked) 1: Interrupt enabled
8	SYNCSTINTEN	Controls the INT_SYNCST interrupt. 0: Interrupt disabled (Masked) 1: Interrupt enabled
7 to 1	Reserved	When read, the value after reset is read. When writing, write the value after reset.
0	TXDEMPTYINT EN	Controls the INT_TXDEMPTY interrupt. 0: Interrupt disabled (Masked) 1: Interrupt enabled

20.3.21 PSI5nTXDCTRL — PSI5 Transmit Data Control Register

This register controls transmission status interrupts.

Access: This register can be read/written in 32-bit units.

Address: <PSI5n_base> + 0094_H

Value after reset: $0000\ 0001_H$ This register is initialized by any reset source.

Bit	31	30	29	28	27	26	25	24	23	22	21	20	19	18	17	16
	—	—	—	—	—	—	—	—	—	—	—	—	—	—	—	—
Value after reset	0	0	0	0	0	0	0	0	0	0	0	0	0	0	0	0
R/W	R	R	R	R	R	R	R	R	R	R	R	R	R	R	R	R

Bit	15	14	13	12	11	10	9	8	7	6	5	4	3	2	1	0
	—	—	—	—	—	—	—	—	—	—	—	—	—	FRMFORMAT		
Value after reset	0	0	0	0	0	0	0	0	0	0	0	0	0	0	0	1
R/W	R	R	R	R	R	R	R	R	R	R	R	R	R	R/W	R/W	R/W

Table 20.29 PSI5nTXDCTRL Register Contents

Bit Position	Bit Name	Function
31 to 3	Reserved	When read, the value after reset is read. When writing, write the value after reset.
2 to 0	FRMFORMAT	Specify the Tx frame format. 001_B: Frame 1 (Short) 010_B: Frame 2 (Long: 4-bit data or 8-bit data) 011_B: Frame3 (XLong) 100_B: Frame4 (XXLong) Other than above: Setting prohibited

20.3.22 PSI5nTXDATA — PSI5 Transmit Data Register

This register stores transmit data.

Access: This register can be read/written in 32-bit units.

Address: <PSI5n_base> + 0098_H

Value after reset: Undefined

Bit	31	30	29	28	27	26	25	24	23	22	21	20	19	18	17	16
	TXDATA															
Value after reset	—	—	—	—	—	—	—	—	—	—	—	—	—	—	—	—
R/W	R/W	R/W	R/W	R/W	R/W	R/W	R/W	R/W	R/W	R/W	R/W	R/W	R/W	R/W	R/W	R/W

Bit	15	14	13	12	11	10	9	8	7	6	5	4	3	2	1	0
	TXDATA															
Value after reset	—	—	—	—	—	—	—	—	—	—	—	—	—	—	—	—
R/W	R/W	R/W	R/W	R/W	R/W	R/W	R/W	R/W	R/W	R/W	R/W	R/W	R/W	R/W	R/W	R/W

Table 20.30 PSI5nTXDATA Register Contents

Bit Position	Bit Name	Function
31 to 0	TXDATA	Tx Data Write Tx data without the Start field, Synchronization bit, and CRC field (Tx data is written in LSB first). Data arrangement differs depending on the transmit frame format specified in the PSI5nTXDCTRL.FRMFORMAT bit. (See **Table 20.31**.) The data is sent after these bits are written. When read always read as 0.

Table 20.31 PSI5nTXDATA.TXDATA Data Arrangement in Transmit Frame Format

TXDATA Bit Position	Transmit Frame Format (PSI5nTXDCTRL.FRMFORMAT)									
	Frame1 "Short"		Frame2 "Long" (4-Bit Data Nibbles)		Frame2 "Long" (8-Bit Data Word)		Frame3 "XLong"		Frame4 "XXLong"	
31 to 24	All 0		All 0		All 0		All 0		All 0	
23									Data	D19
22										D18
21							Data	D7		D17
20								D6		D16
19								D5		D15
18								D4		D14
17								D3		D13
16								D2		D12
15			Data	D3	Data	D7		D1		D11
14				D2		D6		D0		D10
13				D1		D5	RAdr	X7		D9
12				D0		D4		X6		D8
11			RAdr	X5		D3		X5		D7
10				X4		D2		X4		D6
9				X3		D1		X3		D5
8				X2		D0		X2		D4
7				X1	RAdr	X1		X1		D3
6				X0		X0		X0		D2
5	FC	F2	FC	F2	FC	F2	FC	F2		D1
4		F1		F1		F1		F1		D0
3		F0		F0		F0		F0	SAdr	C
2	SAdr	A2	SAdr	A2	SAdr	A2	SAdr	A2		A2
1		A1		A1		A1		A1		A1
0		A0		A0		A0		A0		A0

20.3.23 PSI5nRXSPLSET — PSI5 Receive Sampling Setting Register

This register controls the sampling timing for received data.

Access: This register can be read/written in 32-bit units.

Address: <PSI5n_base> + 0100_H

Value after reset: $0000\ 0027_H$ This register is initialized by any reset source.

Bit	31	30	29	28	27	26	25	24	23	22	21	20	19	18	17	16
	—	—	—	—	—	—	—	—	—	—	—	—	—	—	—	—
Value after reset	0	0	0	0	0	0	0	0	0	0	0	0	0	0	0	0
R/W	R	R	R	R	R	R	R	R	R	R	R	R	R	R	R	R

Bit	15	14	13	12	11	10	9	8	7	6	5	4	3	2	1	0
	—	—	—	—	—	—	—	—	SMPLPROD							
Value after reset	0	0	0	0	0	0	0	0	0	0	1	0	0	1	1	1
R/W	R	R	R	R	R	R	R	R	R/W	R/W	R/W	R/W	R/W	R/W	R/W	R/W

Table 20.32 PSI5nRXSPLSET Register Contents

Bit Position	Bit Name	Function
31 to 8	Reserved	When read, the value after reset is read. When writing, write the value after reset.
7 to 0	SMPLPROD	Specify the value of the sampling interval counter for received data. This counter is counted up based on the psi5_com_clk signal. Specify a 16 times sampling for 1-bit length. psi5_com_clk: 80 MHz (T = 12.5 ns), Bit rate: L (125 KHz, T = 8 μs), Count cycle: 500 ns / 12.5 ns = 40 = 28_H Setting value: 28_H- 01_H = 27_H. Example settings when psi5_com_clk = 80 MHz

Baud Rate	Setting Value
125 KHz	27_H
189 KHz	19_H
250 KHz	13_H

20.3.24 PSI5nRXSmSET — PSI5 Receive Slot m Setting Register (m = 1 to 8)

These registers set the receive slots.

Access: This register can be read/written in 32-bit units.

Address: PSI5nRXS1SET: <PSI5n_base> + 0108_H, PSI5nRXS2SET: <PSI5n_base> + $010C_H$,
PSI5nRXS3SET: <PSI5n_base> + 0110_H, PSI5nRXS4SET: <PSI5n_base> + 0114_H,
PSI5nRXS5SET: <PSI5n_base> + 0118_H, PSI5nRXS6SET: <PSI5n_base> + $011C_H$,
PSI5nRXS7SET: <PSI5n_base> + 0120_H, PSI5nRXS8SET: <PSI5n_base> + 0124_H

Value after reset: $00A0\ 0000_H$ This register is initialized by any reset source.

Bit	31	30	29	28	27	26	25	24	23	22	21	20	19	18	17	16
	SLTEN	—	—	—	—	PAS CMP	ERR DET	LENGTH					OFFSETCNT			
Value after reset	0	0	0	0	0	0	0	0	1	0	1	0	0	0	0	0
R/W	R/W	R	R	R	R	R/W	R/W	R/W	R/W	R/W	R/W	R/W	R/W	R/W	R/W	R/W

Bit	15	14	13	12	11	10	9	8	7	6	5	4	3	2	1	0
	OFFSETCNT															
Value after reset	0	0	0	0	0	0	0	0	0	0	0	0	0	0	0	0
R/W	R/W	R/W	R/W	R/W	R/W	R/W	R/W	R/W	R/W	R/W	R/W	R/W	R/W	R/W	R/W	R/W

Table 20.33 PSI5nRXSmSET Register Contents

Bit Position	Bit Name	Function
31	SLTEN	Slot Enable 0: Slot m is disabled. 1: Slot m is enabled.
30 to 27	Reserved	When read, the value after reset is read. When writing, write the value after reset.
26	PASCMP	Specifies PAS compatibility mode. 0: PSI5 mode is selected. (LSB first) 1: PAS compatibility mode is selected. (MSB first)
25	ERRDET	Specifies the error detection scheme. 0: 1-bit parity 1: 3-bit CRC
24 to 20	LENGTH	Specify the data length
19 to 0	OFFSETCNT	Specify the count value of the offset timer. When the count value reaches the specified value, the PSI5 starts to receive the data in Slot m. The value counted by psi5_com_clk is used. • Example settings when psi5_com_clk = 80 MHz Start time: 44 µs psi5_com_clk: 80 MHz (T = 12.5 ns) Offset value: 44 us / 12.5 ns = 3520 = $0DC0_H$ OFFSETCNT: $0DC0_H$- 0001_H = $0DBF_H$

CAUTIONS

1. In asynchronous mode (PSI5nOPMCOMM.COMMODE = 000_B), only PSI5nRXS1SET is available.
2. The ERRDET must always be set to 0 in PAS compatibility mode (PASCMP = 1).

20.3.25 PSI5nRXDATA — PSI5 Receive Data Register

This register is the receive data register.

Access: This register can only be read in 32-bit units.

Address: <PSI5n_base> + 0128_H

Value after reset: $0000\ 0000_H$ This register is initialized by any reset source.

Bit	31	30	29	28	27	26	25	24	23	22	21	20	19	18	17	16
	RXDATA															
Value after reset	0	0	0	0	0	0	0	0	0	0	0	0	0	0	0	0
R/W	R	R	R	R	R	R	R	R	R	R	R	R	R	R	R	R

Bit	15	14	13	12	11	10	9	8	7	6	5	4	3	2	1	0
	RXDATA															
Value after reset	0	0	0	0	0	0	0	0	0	0	0	0	0	0	0	0
R/W	R	R	R	R	R	R	R	R	R	R	R	R	R	R	R	R

Table 20.34 PSI5nRXDATA Register Contents

Bit Position	Bit Name	Function
31 to 0	RXDATA	Received Data These bits hold received data that does not include a start bit and CRC/parity bits (received data is stored in LSB first). These bits are effective only when PSI5nRXMODST.RXDEXIST = 1.

20.3.26 PSI5nRXDST — PSI5 Receive Data Status Register

This register indicates the status of received data.

Access: This register can only be read in 32-bit units.

Address: <PSI5n_base> + $012C_H$

Value after reset: $0000\ 0000_H$ This register is initialized by any reset source.

Bit	31	30	29	28	27	26	25	24	23	22	21	20	19	18	17	16
	—	—	—	—	—	—	—	—	—	—	—	—	—	—	—	—
Value after reset	0	0	0	0	0	0	0	0	0	0	0	0	0	0	0	0
R/W	R	R	R	R	R	R	R	R	R	R	R	R	R	R	R	R

Bit	15	14	13	12	11	10	9	8	7	6	5	4	3	2	1	0
	—	—	—	—	—	RXCHKD			RXSLOTNUM				—	—	—	RXSTATUS
Value after reset	0	0	0	0	0	0	0	0	0	0	0	0	0	0	0	0
R/W	R	R	R	R	R	R	R	R	R	R	R	R	R	R	R	R

Table 20.35 PSI5nRXDST Register Contents

Bit Position	Bit Name	Function
30 to 11	Reserved	When read, the value after reset is read.
10 to 8	RXCHKD	Raw Data of CRC or Parity In parity mode, setting is as below: RXCHKD[2:1]: 00_B RXCHKD[0]: Parity value These bits are effective only when PSI5nRXMODST.RXDEXIST bit = 1
7 to 4	RXSLOTNUM	Indicate the slot number of received PSI5nRXDATA.RXDATA. The slot number of the first received data is 1 (the slot number is from 1 to 8). These bits are effective only when PSI5nRXMODST.RXDEXIST = 1.
3 to 1	Reserved	When read, the value after reset is read.
0	RXSTATUS	Indicates the status of Rx data. 0: No error. 1: CRC, parity, or syntax error occurred. Syntax error includes the following three types: – An illegal start bit – Data shorter than the length specified by PSI5nRXSmSET.LENGTH (A long data error cannot be detected.) – Manchester code error

20.3.27 PSI5nRXDTIM — PSI5 Receive Data IP Timer Register

This register indicates the IPTIMER value in received data.

Access: This register can only be read in 32-bit units.

Address: <PSI5n_base> + 0130_H

Value after reset: $0000\ 0000_H$ This register is initialized by any reset source.

Bit	31	30	29	28	27	26	25	24	23	22	21	20	19	18	17	16
	RXDTIM															
Value after reset	0	0	0	0	0	0	0	0	0	0	0	0	0	0	0	0
R/W	R	R	R	R	R	R	R	R	R	R	R	R	R	R	R	R

Bit	15	14	13	12	11	10	9	8	7	6	5	4	3	2	1	0
	RXDTIM															
Value after reset	0	0	0	0	0	0	0	0	0	0	0	0	0	0	0	0
R/W	R	R	R	R	R	R	R	R	R	R	R	R	R	R	R	R

Table 20.36 PSI5nRXDTIM Register Contents

Bit Position	Bit Name	Function
31 to 0	RXDTIM	Specify the PSI5nIPTIMER value when the last data (CRC or Parity) is received. These bit fields are effective only when the PSI5RXMODST.RXDEXIST bit is set to 1.

20.3.28 PSI5nRXDFIFO — PSI5 Receive Data FIFO Register

This register is the receive data FIFO register.

Access: This register can only be read in 32-bit units.

Address: <PSI5n_base> + 0134_H

Value after reset: $0000\ 0000_H$ This register is initialized by any reset source.

Bit	31	30	29	28	27	26	25	24	23	22	21	20	19	18	17	16
	RXDST															
Value after reset	0	0	0	0	0	0	0	0	0	0	0	0	0	0	0	0
R/W	R	R	R	R	R	R	R	R	R	R	R	R	R	R	R	R

Bit	15	14	13	12	11	10	9	8	7	6	5	4	3	2	1	0
	RXDST															
Value after reset	0	0	0	0	0	0	0	0	0	0	0	0	0	0	0	0
R/W	R	R	R	R	R	R	R	R	R	R	R	R	R	R	R	R

Table 20.37 PSI5nRXDFIFO Register Contents

Bit Position	Bit Name	Function
31 to 0	RXDST	These bits are used for DMA. These bits can be read after data is received (when PSI5nRXMODST.RXDEXIST= 1 and the INT_RXDEXIST interrupt is asserted). This register acts as FIFO whose content includes PSI5nRXDATA, PSI5nRXDST, and PSI5nRXDTIM. Read the receive data three times each. Data is read in the following order: PSI5nRXDATA, PSI5nRXDST, and then PSI5nRXDTIM. Exclusive access is required between PSI5nRXDFIFO and “PSI5nRXDATA, PSI5nRXDST, or PSI5nRXDTIM”.

20.3.29 PSI5nRXMODST — PSI5 Receive Module Status Register

This register is the status register for the receive module.

Access: This register can only be read in 32-bit units.

Address: <PSI5n_base> + 0138_H

Value after reset: $0000\ 0000_H$ This register is initialized by any reset source.

Bit	31	30	29	28	27	26	25	24	23	22	21	20	19	18	17	16
	—	—	—	—	—	—	—	RXD SCNF ERR	—	—	—	—	—	—	—	RXD ERR
Value after reset	0	0	0	0	0	0	0	0	0	0	0	0	0	0	0	0
R/W	R	R	R	R	R	R	R	R	R	R	R	R	R	R	R	R

Bit	15	14	13	12	11	10	9	8	7	6	5	4	3	2	1	0
	—	—	—	—	—	—	—	RXD FOVF	—	—	—	—	—	—	—	RXD EXIST
Value after reset	0	0	0	0	0	0	0	0	0	0	0	0	0	0	0	0
R/W	R	R	R	R	R	R	R	R	R	R	R	R	R	R	R	R

Table 20.38 PSI5nRXMODST Register Contents

Bit Position	Bit Name	Function
31 to 25	Reserved	When read, the value after reset is read.
24	RXDSCNFERR	Indicates collision errors of synchronization pulse and reception of sensor data. 0: No error has occurred. 1: An error has occurred. When this bit is set, the INT_RXDSCNFERR interrupt is asserted.
23 to 17	Reserved	When read, the value after reset is read.
16	RXDERR	Indicates the status of receive data. 0: No error. 1: CRC, parity, or syntax error occurred. This bit is set by PSI5nRXDST.RXSTATUS bit. When this bit is set, the INT_RXDERR interrupt is asserted.
15 to 9	Reserved	When read, the value after reset is read.
8	RXDFOVF	Receive Data FIFO Overflow Flag 0: No overflow. 1: Overflow occurred. When this bit is set, the INT_RXDFOVF interrupt is asserted.
3 to 1	Reserved	When read, the value after reset is read.
0	RXDEXIST	Indicates whether or not Rx data exists. 0: No Rx data exists. 1: Rx data exists. When the PSI5nRXDATA, PSI5nRXDST, and PSI5nRXDTIM registers are read, this bit is cleared. When this bit is set, the INT_RXDEXIST interrupt is asserted.

20.3.30 PSI5nRXMODSTCLR — PSI5 Receive Module Status Clear Register

This register is the status clear register for the receive module.

Access: This register can be read/written in 32-bit units.

Address: <PSI5n_base> + $013C_H$

Value after reset: $0000\ 0000_H$ This register is initialized by any reset source.

Bit	31	30	29	28	27	26	25	24	23	22	21	20	19	18	17	16
	—	—	—	—	—	—	—	RXDSCNFERRCLR	—	—	—	—	—	—	—	RXDERRCLR
Value after reset	0	0	0	0	0	0	0	0	0	0	0	0	0	0	0	0
R/W	R	R	R	R	R	R	R	R/W	R	R	R	R	R	R	R	R/W

Bit	15	14	13	12	11	10	9	8	7	6	5	4	3	2	1	0
	—	—	—	—	—	—	—	RXDFOVFCLR	—	—	—	—	—	—	—	—
Value after reset	0	0	0	0	0	0	0	0	0	0	0	0	0	0	0	0
R/W	R	R	R	R	R	R	R	R/W	R	R	R	R	R	R	R	R

Table 20.39 PSI5nRXMODSTCLR Register Contents

Bit Position	Bit Name	Function
31 to 25	Reserved	When read, the value after reset is read. When writing, write the value after reset.
24	RXDSCNFERRCLR	Clears the PSI5nRXMODST.RXDSCNFERR bit. 0: No operation is done. 1: The RXDSCNFERR bit is cleared. When read always read as 0.
23 to 17	Reserved	When read, the value after reset is read. When writing, write the value after reset.
16	RXDERRCLR	Clears the PSI5nRXMODST.RXDERR bit. 0: No operation is done. 1: The RXDERR bit is cleared. When read always read as 0.
15 to 9	Reserved	When read, the value after reset is read. When writing, write the value after reset.
8	RXDFOVFCLR	Clears the PSI5nRXMODST.RXDFOVF bit. 0: No operation is done. 1: The RXDFOVF bit is cleared. When read always read as 0.
3 to 0	Reserved	When read, the value after reset is read. When writing, write the value after reset.

20.3.31 PSI5nRXMODSTINTEN — PSI5 Receive Module Status Interrupt Enable Register

This register is the status interrupt enable register for the receive module.

Access: This register can be read/written in 32-bit units.

Address: <PSI5n_base> + 0140_H

Value after reset: $0000\ 0000_H$ This register is initialized by any reset source.

Bit	31	30	29	28	27	26	25	24	23	22	21	20	19	18	17	16
	—	—	—	—	—	—	—	RXDSCNFERRINTEN	—	—	—	—	—	—	—	RXDERRINTEN
Value after reset	0	0	0	0	0	0	0	0	0	0	0	0	0	0	0	0
R/W	R	R	R	R	R	R	R	R/W	R	R	R	R	R	R	R	R/W

Bit	15	14	13	12	11	10	9	8	7	6	5	4	3	2	1	0
	—	—	—	—	—	—	—	RXDFOVFINTEN	—	—	—	—	—	—	—	RXDEXISTINTEN
Value after reset	0	0	0	0	0	0	0	0	0	0	0	0	0	0	0	0
R/W	R	R	R	R	R	R	R	R/W	R	R	R	R	R	R	R	R/W

Table 20.40 PSI5nRXMODSTINTEN Register Contents

Bit Position	Bit Name	Function
31 to 25	Reserved	When read, the value after reset is read. When writing, write the value after reset.
24	RXDSCNFERRINTEN	INT_RXDSCNFERR Interrupt Enable 0: Interrupt disabled (Masked) 1: Interrupt enabled
23 to 17	Reserved	When read, the value after reset is read. When writing, write the value after reset.
16	RXDERRINTEN	INT_RXDERR Interrupt Enable 0: Interrupt disabled (Masked) 1: Interrupt enabled
15 to 9	Reserved	When read, the value after reset is read. When writing, write the value after reset.
8	RXDFOVFINTEN	INT_RXDFOVF Interrupt Enable 0: Interrupt disabled (Masked) 1: Interrupt enabled
3 to 1	Reserved	When read, the value after reset is read. When writing, write the value after reset.
0	RXDEXISTINTEN	INT_RXDEXIST Interrupt Enable 0: Interrupt disabled (Masked) 1: Interrupt enabled

20.3.32 PSI5nRXMSET — PSI5 Receive Message Channel Setting Register

This register sets the channels for the receive module.

Access: This register can be read/written in 32-bit units.

Address: <PSI5n_base> + 0180_H

Value after reset: $0000\ 0000_H$ This register is initialized by any reset source.

Bit	31	30	29	28	27	26	25	24	23	22	21	20	19	18	17	16
	—	—	—	—	—	—	—	—	—	—	—	—	—	—	—	—
Value after reset	0	0	0	0	0	0	0	0	0	0	0	0	0	0	0	0
R/W	R	R	R	R	R	R	R	R	R	R	R	R	R	R	R	R

Bit	15	14	13	12	11	10	9	8	7	6	5	4	3	2	1	0
	—	—	—	—	—	—	—	—	RXM8 EN	RXM7 EN	RXM6 EN	RXM5 EN	RXM4 EN	RXM3 EN	RXM2 EN	RXM1 EN
Value after reset	0	0	0	0	0	0	0	0	0	0	0	0	0	0	0	0
R/W	R	R	R	R	R	R	R	R	R/W	R/W	R/W	R/W	R/W	R/W	R/W	R/W

Table 20.41 PSI5nRXMSET Register Contents

Bit Position	Bit Name	Function
31 to 8	Reserved	When read, the value after reset is read. When writing, write the value after reset.
7	RXM8EN	Controls the messaging channel for slot 8. 0: Messaging channel is disabled. 1: Messaging channel is enabled.
6	RXM7EN	Controls the messaging channel for slot 7. 0: Messaging channel is disabled. 1: Messaging channel is enabled.
5	RXM6EN	Controls the messaging channel for slot 6. 0: Messaging channel is disabled. 1: Messaging channel is enabled.
4	RXM5EN	Controls the messaging channel for slot 5. 0: Messaging channel is disabled. 1: Messaging channel is enabled.
3	RXM4EN	Controls the messaging channel for slot 4. 0: Messaging channel is disabled. 1: Messaging channel is enabled.
2	RXM3EN	Controls the messaging channel for slot 3. 0: Messaging channel is disabled. 1: Messaging channel is enabled.
1	RXM2EN	Controls the messaging channel for slot 2. 0: Messaging channel is disabled. 1: Messaging channel is enabled.
0	RXM1EN	Controls the messaging channel for slot 1. 0: Messaging channel is disabled. 1: Messaging channel is enabled.

20.3.33 PSI5nRXMRXMSG — PSI5 Receive-Message Receive Message Register

This register is the receive message register.

Access: This register can be read in 32-bit units.

Address: <PSI5n_base> + 0184_H

Value after reset: $0000\ 0000_H$ This register is initialized by any reset source.

Bit	31	30	29	28	27	26	25	24	23	22	21	20	19	18	17	16
	CONFIGBIT	—	—	—	—	—	—	—	SERIALID							
Value after reset	0	0	0	0	0	0	0	0	0	0	0	0	0	0	0	0
R/W	R	R	R	R	R	R	R	R	R	R	R	R	R	R	R	R

Bit	15	14	13	12	11	10	9	8	7	6	5	4	3	2	1	0
	DATAFIELD															
Value after reset	0	0	0	0	0	0	0	0	0	0	0	0	0	0	0	0
R/W	R	R	R	R	R	R	R	R	R	R	R	R	R	R	R	R

Table 20.42 PSI5nRXMRXMSG Register Contents

Bit Position	Bit Name	Function
31	CONFIGBIT	Configuration Bit in the Received Serial Data Frame See **Figure 20.3**.
30 to 24	Reserved	When read, the value after reset is read.
23 to 16	SERIALID	Serial ID in the Received Serial Data Frame See **Figure 20.3**.
15 to 0	DATAFIELD	Data Field in the Received Serial Data Frame See **Figure 20.3**.

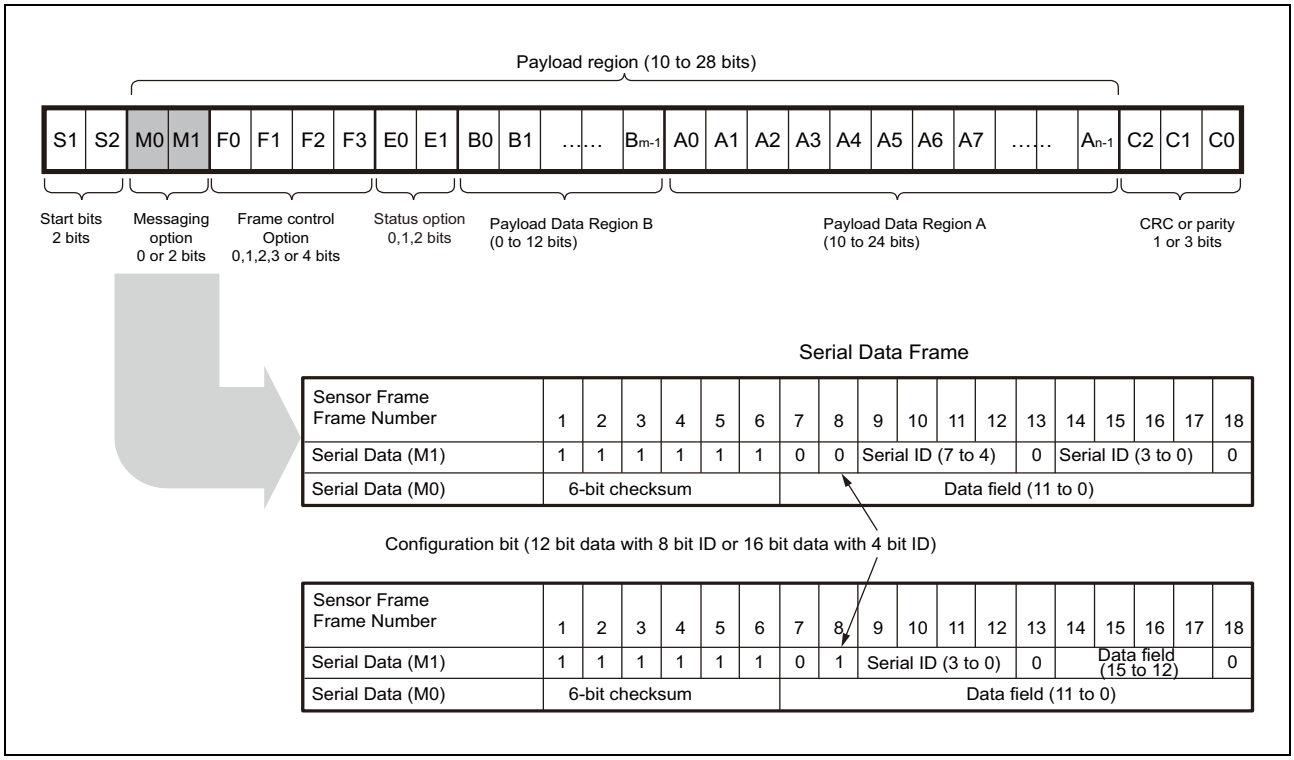

Figure 20.3 Serial Data Frame Configured by the Two Messaging Bits of the Sensor Data Frame (Messaging Channel)

20.3.34 PSI5nRXMRXST — PSI5 Receive-message Channel Receive Status Register

This register is the receive status register for the receive-message channel.

Access: This register can only be read in 32-bit units.

Address: <PSI5n_base> + 0188_H

Value after reset: $0000\ 0000_H$ This register is initialized by any reset source.

Bit	31	30	29	28	27	26	25	24	23	22	21	20	19	18	17	16
	—	—	—	—	—	—	—	—	—	—	—	—	—	RXSYNC		
Value after reset	0	0	0	0	0	0	0	0	0	0	0	0	0	0	0	0
R/W	R	R	R	R	R	R	R	R	R	R	R	R	R	R	R	R

Bit	15	14	13	12	11	10	9	8	7	6	5	4	3	2	1	0
	—	—	RXCRC						SLOTNUM				—	—	—	RXSTATUS
Value after reset	0	0	0	0	0	0	0	0	0	0	0	0	0	0	0	0
R/W	R	R	R	R	R	R	R	R	R	R	R	R	R	R	R	R

Table 20.43 PSI5nRXMRXST Register Contents

Bit Position	Bit Name	Function
30 to 19	Reserved	When read, the value after reset is read.
18 to 16	RXSYNC	Received Synchronization Bit Raw Data (the frame numbers 7, 13, and 18 of the sensor frame) For the sensor frame, see **Figure 20.3**.
15, 14	Reserved	When read, the value after reset is read.
13 to 8	RXCRC	Received CRC Raw Data
7 to 4	SLOTNUM	Received Serial Data Frame's Slot Number
3 to 1	Reserved	When read, the value after reset is read.
0	RXSTATUS	Indicates the error state of Rx data. 0: No error. 1: CRC or Syntax error occurred. A syntax error also occurs when the receive synchronization bit has received a value other than 0 while RXSYNC = 000_B.

20.3.35 PSI5nRXMRXTIM — PSI5 Receive-message Channel Receive Timestamp Register

This register indicates the value of the receive-message channel receive timestamp.

Access: This register can be read in 32-bit units.

Address: <PSI5n_base> + $018C_H$

Value after reset: $0000\ 0000_H$ This register is initialized by any reset source.

Bit	31	30	29	28	27	26	25	24	23	22	21	20	19	18	17	16
	RXMTIM															
Value after reset	0	0	0	0	0	0	0	0	0	0	0	0	0	0	0	0
R/W	R	R	R	R	R	R	R	R	R	R	R	R	R	R	R	R

Bit	15	14	13	12	11	10	9	8	7	6	5	4	3	2	1	0
	RXMTIM															
Value after reset	0	0	0	0	0	0	0	0	0	0	0	0	0	0	0	0
R/W	R	R	R	R	R	R	R	R	R	R	R	R	R	R	R	R

Table 20.44 PSI5nRXMRXTIM Register Contents

Bit Position	Bit Name	Function
31 to 0	RXMTIM	Indicate the PSI5nIPTIMER value when the last data (frame number 18 of the sensor frame) is received. For the sensor frame, see **Figure 20.3**. These bits are effective only when PSI5nRXMMST.RXMEXIST = 1.

20.3.36 PSI5nRXMFIFO — PSI5 Receive-message Channel FIFO Register

This register indicates the receive-message channel FIFO information.

Access: This register can only be read in 32-bit units.

Address: <PSI5n_base> + 0190_H

Value after reset: $0000\ 0000_H$ This register is initialized by any reset source.

Bit	31	30	29	28	27	26	25	24	23	22	21	20	19	18	17	16
	RXMFIFO															
Value after reset	0	0	0	0	0	0	0	0	0	0	0	0	0	0	0	0
R/W	R	R	R	R	R	R	R	R	R	R	R	R	R	R	R	R

Bit	15	14	13	12	11	10	9	8	7	6	5	4	3	2	1	0
	RXMFIFO															
Value after reset	0	0	0	0	0	0	0	0	0	0	0	0	0	0	0	0
R/W	R	R	R	R	R	R	R	R	R	R	R	R	R	R	R	R

Table 20.45 PSI5nRXMFIFO Register Contents

Bit Position	Bit Name	Function
31 to 0	RXMFIFO	These bits can be read after data is received (when PSI5nRXMMST.RXMEXIST= 1: INT_RXMEXIST interrupt is asserted). This register acts as FIFO whose content includes PSI5nRXMRXMSG, PSI5nRXMRXST, and PSI5nRXMTIM. Read the received data three times each. Data is read in the following order: PSI5nRXMRXMSG, PSI5nRXMRXST, and then PSI5nRXMTIM. Exclusive access is required between PSI5nRXMFIFO and “PSI5nRXMRXMSG, PSI5nRXMRXST, or PSI5nRXMTIM”.

20.3.37 PSI5nRXMMST — PSI5 Receive-message Channel Module Status Register

This register is the status register for the receive-message channel module.

Access: This register can only be read in 32-bit units.

Address: <PSI5n_base> + 0194_H

Value after reset: $0000\ 0000_H$ This register is initialized by any reset source.

Bit	31	30	29	28	27	26	25	24	23	22	21	20	19	18	17	16
	—	—	—	—	—	—	—	—	—	—	—	—	—	—	—	RXM ERR
Value after reset	0	0	0	0	0	0	0	0	0	0	0	0	0	0	0	0
R/W	R	R	R	R	R	R	R	R	R	R	R	R	R	R	R	R

Bit	15	14	13	12	11	10	9	8	7	6	5	4	3	2	1	0
	—	—	—	—	—	—	—	RXM FOVF	—	—	—	—	—	—	—	RXM EXIST
Value after reset	0	0	0	0	0	0	0	0	0	0	0	0	0	0	0	0
R/W	R	R	R	R	R	R	R	R	R	R	R	R	R	R	R	R

Table 20.46 PSI5nRXMMST Register Contents

Bit Position	Bit Name	Function
31 to 25	Reserved	When read, the value after reset is read.
16	RXMERR	Rx Message Error 0: No error. 1: Error occurred. When this bit is set, the INT_RXMERR interrupt is asserted.
15 to 9	Reserved	When read, the value after reset is read.
8	RXMFOVF	Rx Message FIFO Overflow Flag 0: No overflow. 1: Overflow occurred. When this bit is set, the INT_RXMFOVF interrupt is asserted.
3 to 1	Reserved	When read, the value after reset is read.
0	RXMEXIST	Indicates whether Rx Serial Data Frame exists. 0: No Rx serial data exists. 1: Rx serial data exists. When the PSI5nRXMRXMSG, PSI5nRXMRXST, and PSI5nRXMTIM registers are read, this bit is cleared. When this bit is set, the INT_RXMEXIST interrupt is asserted.

20.3.38 PSI5nRXMMSTCLR— PSI5 Receive-message Channel Module Status Clear Register

This register is used to clear the receive-message channel module status register.

Access: This register can be read/written in 32-bit units.

Address: <PSI5n_base> + 0198_H

Value after reset: $0000\ 0000_H$ This register is initialized by any reset source.

Bit	31	30	29	28	27	26	25	24	23	22	21	20	19	18	17	16
	—	—	—	—	—	—	—	—	—	—	—	—	—	—	—	RXM ERR CLR
Value after reset	0	0	0	0	0	0	0	0	0	0	0	0	0	0	0	0
R/W	R	R	R	R	R	R	R	R	R	R	R	R	R	R	R	R/W

Bit	15	14	13	12	11	10	9	8	7	6	5	4	3	2	1	0
	—	—	—	—	—	—	—	RXM FOVF CLR	—	—	—	—	—	—	—	—
Value after reset	0	0	0	0	0	0	0	0	0	0	0	0	0	0	0	0
R/W	R	R	R	R	R	R	R	R/W	R	R	R	R	R	R	R	R

Table 20.47 PSI5nRXMMSTCLR Register Contents

Bit Position	Bit Name	Function
31 to 25	Reserved	When read, the value after reset is read. When writing, write the value after reset.
16	RXMERRCLR	Clears the status of the PSI5nRXMMST.RXMERR bit. 0: No operation is done. 1: The RXMERR bit is cleared. When read always read as 0.
15 to 9	Reserved	When read, the value after reset is read. When writing, write the value after reset.
8	RXMFOVFCLR	Clears the status of the PSI5nRXMMST.RXMFOVF bit. 0: No operation is done. 1: The RXMFOVF bit is cleared. When read always read as 0.
3 to 0	Reserved	When read, the value after reset is read. When writing, write the value after reset.

20.3.39 PSI5nRXMMSTINTEN — PSI5 Receive-message Channel Module Status Interrupt Enable Register

This register controls interrupts from the receive-message channel module.

Access: This register can be read/written in 32-bit units.

Address: <PSI5n_base> + $019C_H$

Value after reset: $0000\ 0000_H$ This register is initialized by any reset source.

Bit	31	30	29	28	27	26	25	24	23	22	21	20	19	18	17	16
	—	—	—	—	—	—	—	—	—	—	—	—	—	—	—	RXM ERR INTEN
Value after reset	0	0	0	0	0	0	0	0	0	0	0	0	0	0	0	0
R/W	R	R	R	R	R	R	R	R	R	R	R	R	R	R	R	R/W

Bit	15	14	13	12	11	10	9	8	7	6	5	4	3	2	1	0
	—	—	—	—	—	—	—	RXM FOVF INTEN	—	—	—	—	—	—	—	RXM EXIST INTEN
Value after reset	0	0	0	0	0	0	0	0	0	0	0	0	0	0	0	0
R/W	R	R	R	R	R	R	R	R/W	R	R	R	R	R	R	R	R/W

Table 20.48 PSI5nRXMMSTINTEN Register Contents

Bit Position	Bit Name	Function
31 to 25	Reserved	When read, the value after reset is read. When writing, write the value after reset.
16	RXMERR INTEN	INT_RXMERR Interrupt Enable 0: Interrupt disabled (Masked) 1: Interrupt enabled
15 to 9	Reserved	When read, the value after reset is read. When writing, write the value after reset.
8	RXMFOVF INTEN	INT_RXMFOVF Interrupt Enable 0: Interrupt disabled (Masked) 1: Interrupt enabled
3 to 1	Reserved	When read, the value after reset is read. When writing, write the value after reset.
0	RXMEXIST INTEN	INT_RXMEXIST Interrupt Enable 0: Interrupt disabled (Masked) 1: Interrupt enabled

20.3.40 PSI5TSSEL — PSI5 Timestamp Function Mode Selection Register

This register specifies the timestamp setting.

This register can be controlled when the PSI5 is stopped (PSI5nCHCTRL.CHEN = 0).

Access: This register can be read/written in 32-bit units.

Address: <PSI50_base> + 3000_H

Value after reset: $0000\ 0000_H$ This register is initialized by any reset source.

Bit	31	30	29	28	27	26	25	24	23	22	21	20	19	18	17	16
	—	—	—	—	—	—	—	—	—	—	—	—	—	—	—	—
Value after reset	0	0	0	0	0	0	0	0	0	0	0	0	0	0	0	0
R/W	R	R	R	R	R	R	R	R	R	R	R	R	R	R	R	R

Bit	15	14	13	12	11	10	9	8	7	6	5	4	3	2	1	0
	—	—	—	—	—	—	—	—	—	—	—	—	—	—	—	PSI5MSSEL0
Value after reset	0	0	0	0	0	0	0	0	0	0	0	0	0	0	0	0
R/W	R	R	R	R	R	R	R	R	R	R	R	R	R	R	R	R/W

Table 20.49 PSI5TSSEL Register Contents

Bit Position	Bit Name	Function
31 to 1	Reserved	When read, the value after reset is read. When writing, write the value after reset.
0	PSI5MSSEL0	Timestamp Mode Selection 0: Inputs the timestamp count-up timing and clearing signals from PSI51 to PSI50. 1: Inputs the timestamp count-up timing and clearing signals from PSI50 to PSI51.

20.4 Interrupt

The PSI5 has 10 interrupt signals.

Table 20.50 PSI5 Interrupt Signals and Corresponding Registers

Interrupt Signal	Function	Source Register Bit	Interrupt Enable Register Bit
INT_SYNCED	Synchronization end interrupt	PSI5nTXST. SYNCED	PSI5nTXSTINTEN. SYNCEDINTEN
INT_SYNCST	Synchronization start interrupt	PSI5nTXST. SYNCST	PSI5nTXSTINTEN. SYNCSTINTEN
INT_TXDEMPTY	Transmit data empty interrupt	PSI5nTXST. TXDEMPTY	PSI5nTXSTINTEN. TXDEMPTYINTEN
INT_RXDSCNFERR	Synchronization pulse and receive data conflict error interrupt	PSI5nRXMODST. RXDSCNFERR	PSI5nRXMODSTINTEN. RXDSCNFINTEN
INT_RXDERR	Receive data error interrupt	PSI5nRXMODST. RXDERR	PSI5nRXMODSTINTEN. RXDERRINTEN
INT_RXDFOVF	Receive data FIFO overflow interrupt	PSI5nRXMODST. RXDFOVF	PSI5nRXMODSTINTEN. RXDFOVFINTEN
INT_RXDEXIST	Receive data exist interrupt	PSI5nRXMODST. RXDEXIST	PSI5nRXMODSTINTEN. RXDEXISTINTEN
INT_RXMFOVF	Receive message FIFO overflow interrupt	PSI5nRXMMST. RXMFOVF	PSI5nRXMMSTINTEN. RXMFOVFINTEN
INT_RXMERR	Receive message error interrupt	PSI5nRXMMST. RXMERR	PSI5nRXMMSTINTEN. RXMERRINTEN
INT_RXMEXIST	Receive message exist interrupt	PSI5nRXMMST. RXMEXIST	PSI5nRXMMSTINTEN. RXMEXISTINTEN

The following figure shows the relationship between the PSI5 interrupt signals, and RH850/P1x's interrupt controller INTC and DMA.

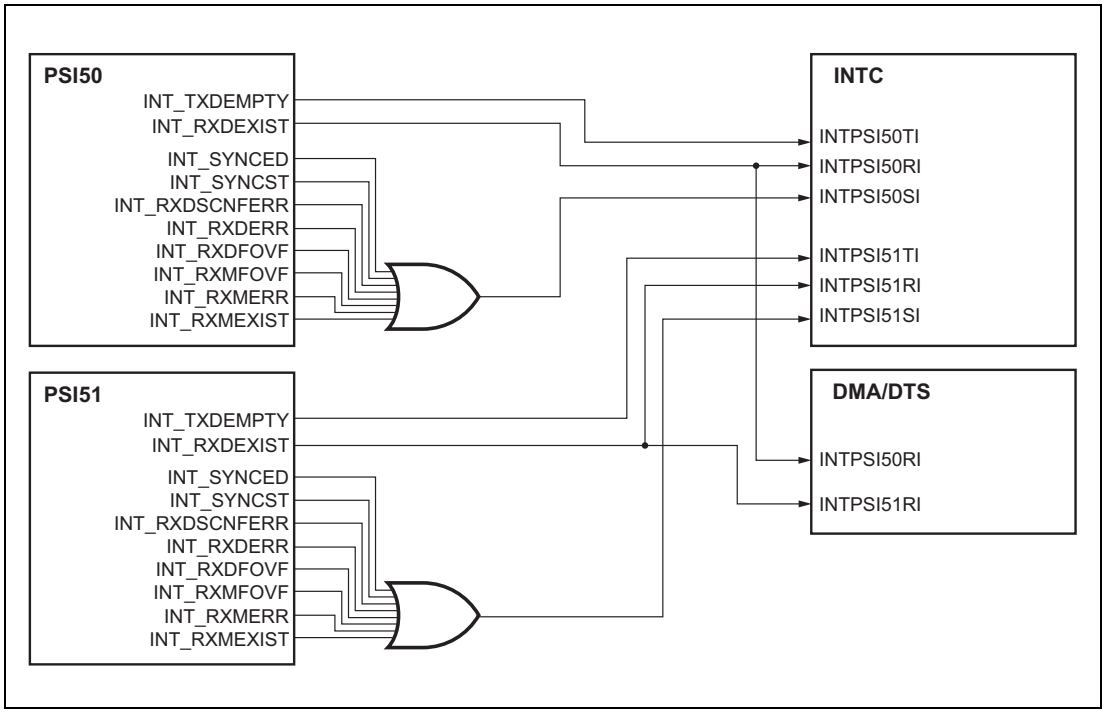

Figure 20.4 PSI5 Interrupt Signals

20.5 Operation

20.5.1 Setting Operation Mode

Before the PSI5n starts operating, initial settings including the sensor connection status and operation mode must be configured. The following describes necessary initial settings.

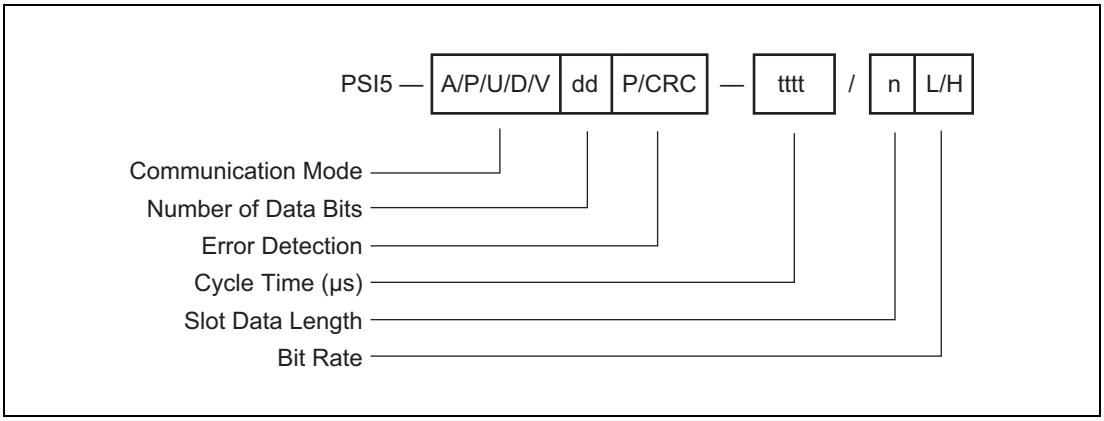

Figure 20.5 Setting PSI5 Operation Mode

Table 20.51 Setting Operation Mode

Item		Description
Communication Modes	A	Asynchronous Mode
	P	Synchronous Parallel Bus Mode
	U	Synchronous Universal Bus Mode
	D	Synchronous Daisy Chain Bus Mode
	V	Variable Time Triggered Synchronous Operation Mode
Number of data bits	dd	Data length of each slot specified in the PSI5nRXSmSET.LENGTH bit (10 to 28 bits)
Error Detection	P	One Parity Bit
	CRC	Three Bits CRC
Cycle time	tttt	Cycle Time (Minimum cycle time allowed in variable time triggered synchronous operation mode)(μs)
Slot count/cycle (n)	n	Select the slot to be used in the PSI5nRXMSET.
Bit Rate	L	125 Kbps
	H	189 Kbps

20.5.1.1 Setting for Transmit/Receive Mode

Set PSI5nOPMCOMM, PSI5nOPMBITRATE, and PSI5nOPMCYCT to the value corresponding to the specification of the PS15 sensor and its connection status.

20.5.1.2 Setting for Data Reception

The RH850/P1x receives data on psi5_com_clk.

A 16-times sampling is used for bit detection.

The bit length depends on the setting of PSI5nRXSPLSET.SMPLPROD[7:0].

- PSI5nRXSPLSET.SMPLPROD[7:0]: Set the sampling interval.

Set the value counted by psi5_com_clk. The RH850/P1x uses a 16-times sampling.

20.5.1.3 Initial Setting for Asynchronous Mode

In asynchronous mode, only PSI5nRXS1SET is available. Writing 1 to SLTEN in PSI5nRXS2SET to PSI5nRXS8SET is prohibited (so disable them).

In asynchronous mode, set the SLTEN, PASCMP, ERRDET, and LENGTH fields in PSI5nRXS1SET. The OFFSETCNT field is not available.

20.5.1.4 Initial Setting for Synchronous Mode

In synchronous mode, specify all fields of PSI5nRXS1SET to PSI5nRXS8SET appropriately.

The recommended setting values for PSI5nRXS1SET.OFFSETCNT and PSI5nRXS2SET to PSI5nRXS8SET.OFFSETCNT can be obtained as the results of the formula in **Figure 20.6** and **Figure 20.7**. In these figures, tcom_clk and psi5_com_clk indicate the time for one cycle. Other variables are the variables specified by the PSI5 standard.

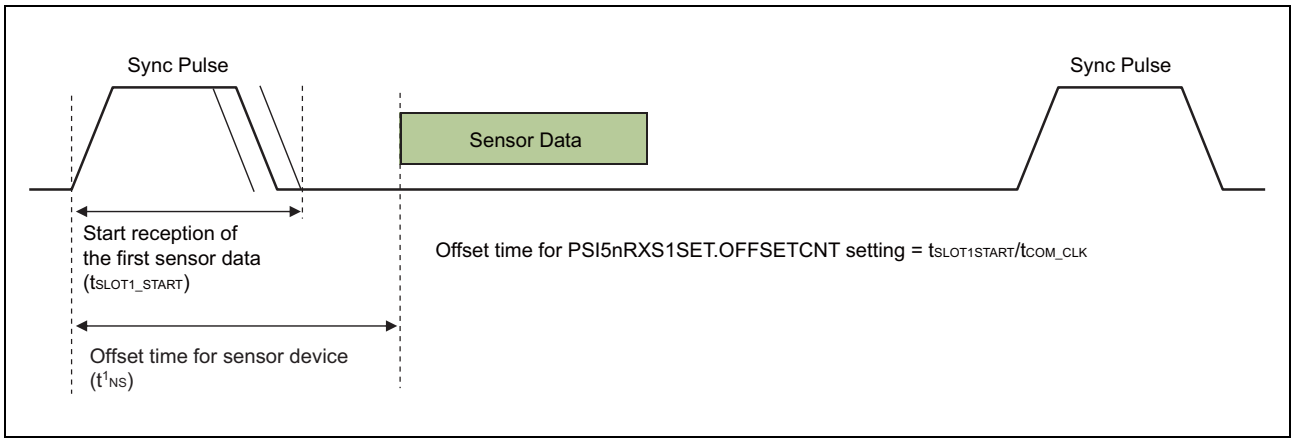

Figure 20.6 Recommended Setting of PSI5nRXS1SET.OFFSETCNT

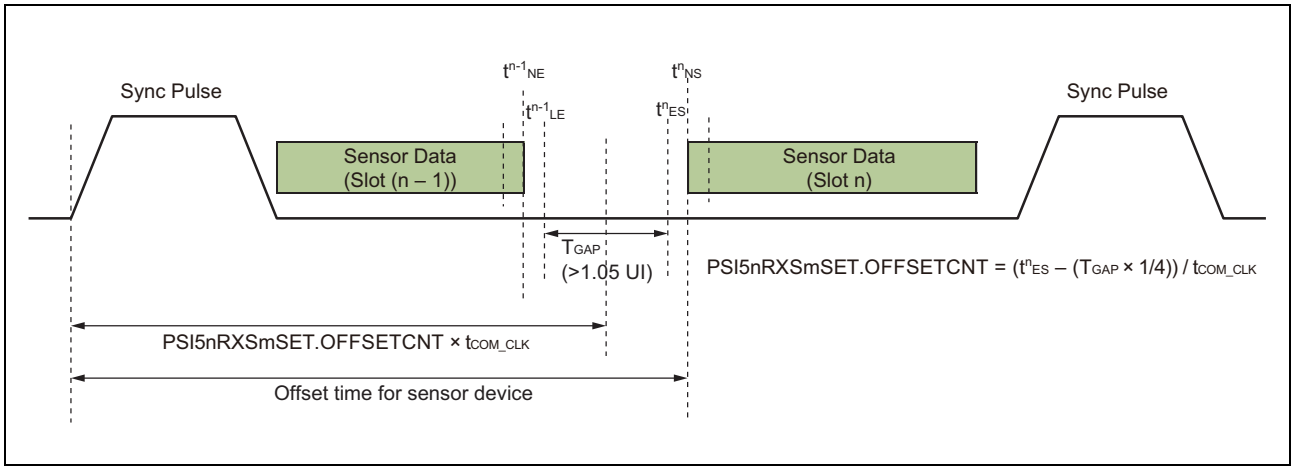

Figure 20.7 Recommended Setting of PSI5nRXSmSET.OFFSETCNT (m = 2 to 8)

20.5.1.5 Setting for Serial Message Reception

To receive a serial message, write 1 to PSI5nRXMSET. RXMmEN (m = 1 to 8) in the corresponding slot.

20.5.1.6 Initial Setting in Asynchronous Mode

In asynchronous mode, registers for transmission are disables except PSI5nTXSETTING.DEFTXVAL fields. Use the value after reset.

The PSI5 outputs the value set in PSI5nTXSETTING. DEFTXVAL after the start of operation (although the standard does not define output data in asynchronous mode). The value after reset is 1.

20.5.1.7 Initial Setting in Synchronous Mode

Set the value in PSI5nTXSETTING.

PSI5nTXSETTING.DEFTXVAL sets a synchronization pulse value for the period during which data is not transmitted. In Tooth GAP mode, set the PSI5nTXSETTING.DEFTXVAL to 1. In pulse width mode, the value is not specified in the standard. Set the value specified by a system designer.

In variable time triggered synchronous operation mode, the user must specify the timing for synchronization pulse output.

When issuing a synchronization pulse, write 1 to the PSI5nSYNCCTRL.VALTIMSYNC bits.

Set the data format to be transmitted to the sensor in PSI5nTXDCTRL.FRMFORMAT.

20.5.1.8 Setting for Timestamping

A timestamp is appended to the received data so that the order of the received data and messages can be identified.

Timestamping is available in two modes: master mode for generation of the timing for counting up within the PSI5, and slave mode for counting with an input signal from the master. In master mode, the count-up timing is output to the output signal psi5_ts_tick_out. In slave mode, the input signal psi5_ts_tick_in is used for counting up.

To use a timestamp, set PSI5nIPTIMERCTRL.IPTIMEN to 1. Specify master or slave in PSI5nIPTIMERCTRL.MSTSLV.

In master mode, the count-up timing is complete when the internal baud rate counter is complete. The value to complete the baud rate counter is the setting of PSI5nOPMBITRATE.BITRATECNT.

The timestamp can be cleared by writing 1 to PSI5nIPTIMERCTRL.TSCLR irrespective of master or slave. In master mode, the clearing timing is output to the output signal psi5_ts_clr_out. In slave mode, the input signal psi5_ts_clr_in from the master can be used to clear the timestamp.

(1) Setting of Master/Slave Mode in Timestamp Mode

For PSI50 and PSI51, the timestamp mode can be selected from master mode and slave mode.

The following shows the setting of master or slave mode.

Table 20.52 Setting of Master/Slave Mode

PSI5TSSEL. PSI5MSSEL0 Bit	IPTIMERCTRL. MSTSLV Bit in PSI50	IPTIMERCTRL. MSTSLV Bit in PSI51	Timestamp Mode		Operation
			PSI50	PSI51	
1	1	0	Master of PSI51	Slave of PSI50	PSI50 operates as master and PSI51 operates as slave.
1	1	1	Master (No slave)	Master (No slave)	PSI50 and PSI51 operate in master mode without slaves.
0	0	1	Slave of PSI51	Master of PSI50	PSI51 operates as master, and PSI50 operates as slave.
0	1	1	Master (No slave)	Master (No slave)	PSI50 and PSI51 operates in master mode without slaves.
Other than above			Setting prohibited		

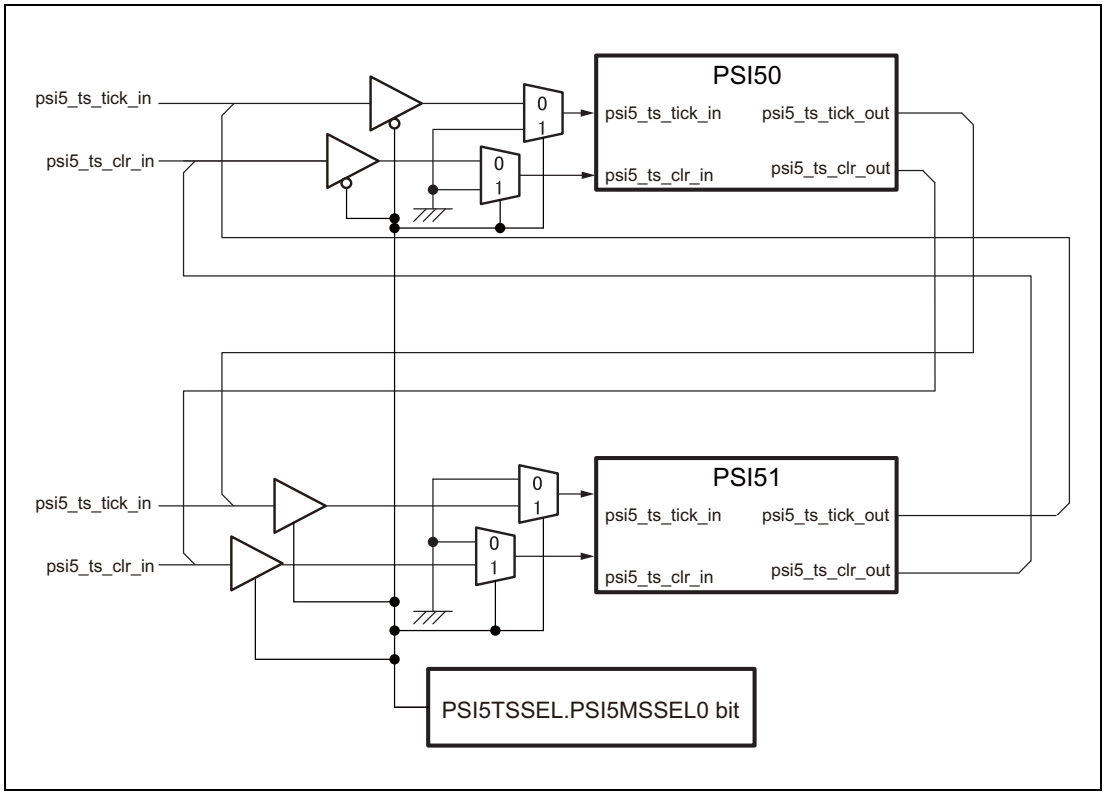

Figure 20.8 Relationship Between PSI50 and PSI51

20.5.2 Operation Flow

20.5.2.1 Starting Operation

Figure 20.9 shows the flow from initialization to the start of operation. When resetting the sensor or releasing it from reset, issue instructions to the PHY as these operations are performed by the PHY.

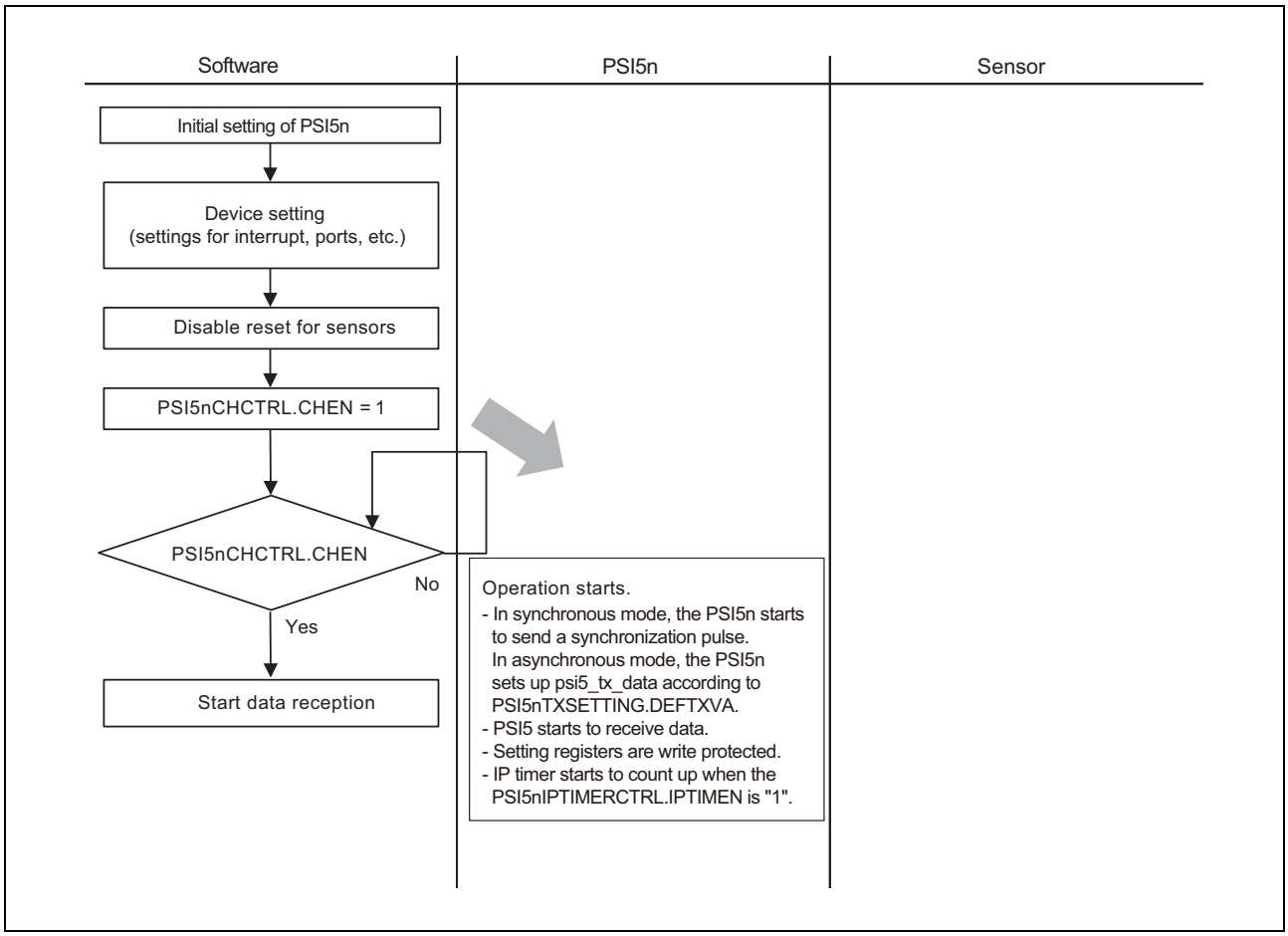

Figure 20.9 Flow of Starting Operation

20.5.2.2 Flow of Data Reception

Figure 20.10 shows the flow of data reception. The interrupt enable (PSI5nRXMODSTINTEN.RXDEXISTINTEN = 1) in the flowchart is not required when polling is used for detection of reception, or when it is always enabled (this applies to enabling of other interrupts in the subsequent sections).

The received data without the start bit and CRC/parity bits can be read out from PSI5nRXDATA.RXDATA.

Regarding the FIFO buffer shown in **Figure 20.10**, when data are received, that state is retained, and even if the register is empty, the received data are set from the FIFO buffer to the register. In cases of overflow because of delays in the reading out of data, new data are written to the buffer.

When reading data from the FIFO buffer, check that the value of PSI5nRXMDST.RXDEXIST is 0. Since PSI5nRXMDST.RXDEXIST being 1 indicates that data which have not been read out remain in the FIFO buffer, repeat the processing for reading.

The PSI5nRXDST. RXSTATUS is set to 1 in response to a start-bit error, Manchester code error, CRC error, or parity error during data reception. Specifically, in cases where multiple errors are detected during the reception of a single frame, the FIFO buffer for received data is updated every time an error occurs.

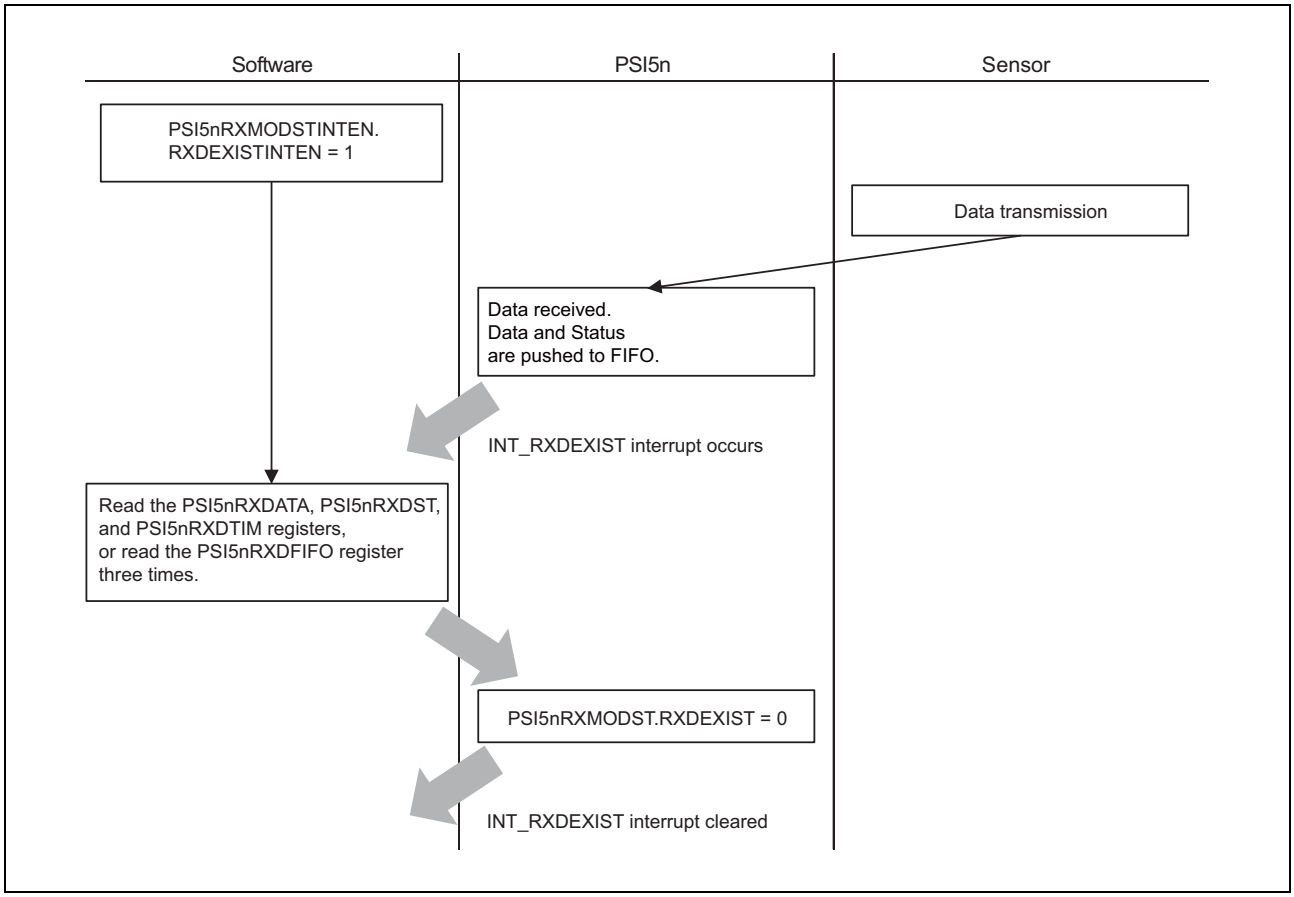

Figure 20.10 Data Reception Flow

20.5.2.3 Flow of Data Transmission

Figure 20.11 shows the flow of data transmission.

Transmit data arrangement to be written to the PSI5nTXDATA.TXDATA differs depending on the transmit frame format specified in the PSI5nTXDCTRL.FRMFORMAT bit (See **Table 20.31**). The data must not include a start bit, synchronization bit, or CRC (these are automatically appended).

Once PSI5nTXDCTRL.FRMFORMAT has been set, it does not need to be set again after that.

The PSI5 module does not have a FIFO buffer for transmission, so processing for transmission is sequential. When you intend to write to the transmission buffer, read the state of the buffer empty flag to check if it currently indicates the buffer empty state (PSI5nTXST.TXDEMPTY = 1). If the transmission buffer holds data to be transmitted at the time of writing (PSI5nTXST.TXDEMPTY = 0), transmitted data become undefined when data are written to the transmission buffer.

PSI5nTXST.TXDEMPTY becomes 1 to indicate the completion of transmission when reading of the last bit of the data from the transmission buffer starts.

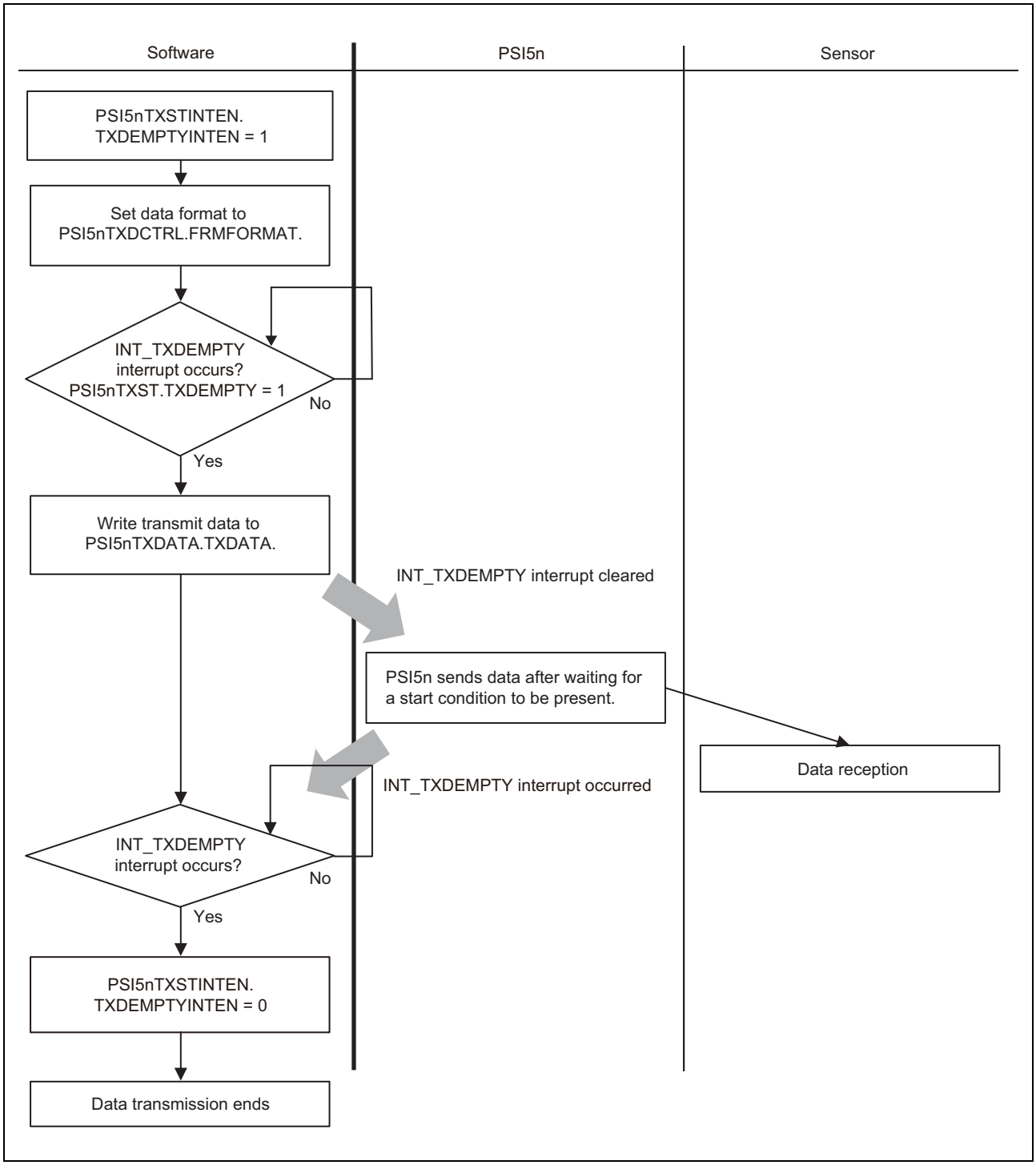

Figure 20.11 Data Transmission Flow

20.5.2.4 Serial Message Reception Flow

Figure 20.12 shows the flow of serial message reception.

The received serial message can be read out from PSI5nRXMRXMSG.RXDATA.

In **Figure 20.12**, the FIFO buffer holds the serial message and its state and the received data are set from the FIFO buffer to the register if the register is empty. In cases of overflow because of delays in the reading out of data, new data are written to the buffer.

When reading data from the FIFO buffer, check that the value of PSI5nRXMMST.RXMEXIST is 0. Since PSI5nRXMMST.RXMEXIST being 1 indicates that data which have not been read out remain in the FIFO buffer, repeat the processing for reading.

If either a CRC error or a receive data error occurs after the detection of the start bit in the message (after reception of M1 (Frame No.) = 111111_B), PSI5nRXMRXST.RXSTATUS is set to 1. In this case, handling of the received message is system-dependent. When an receive data error occurs, the message up to that data is stored in order from the least-significant bit of PSI5nRXMRXMSG.

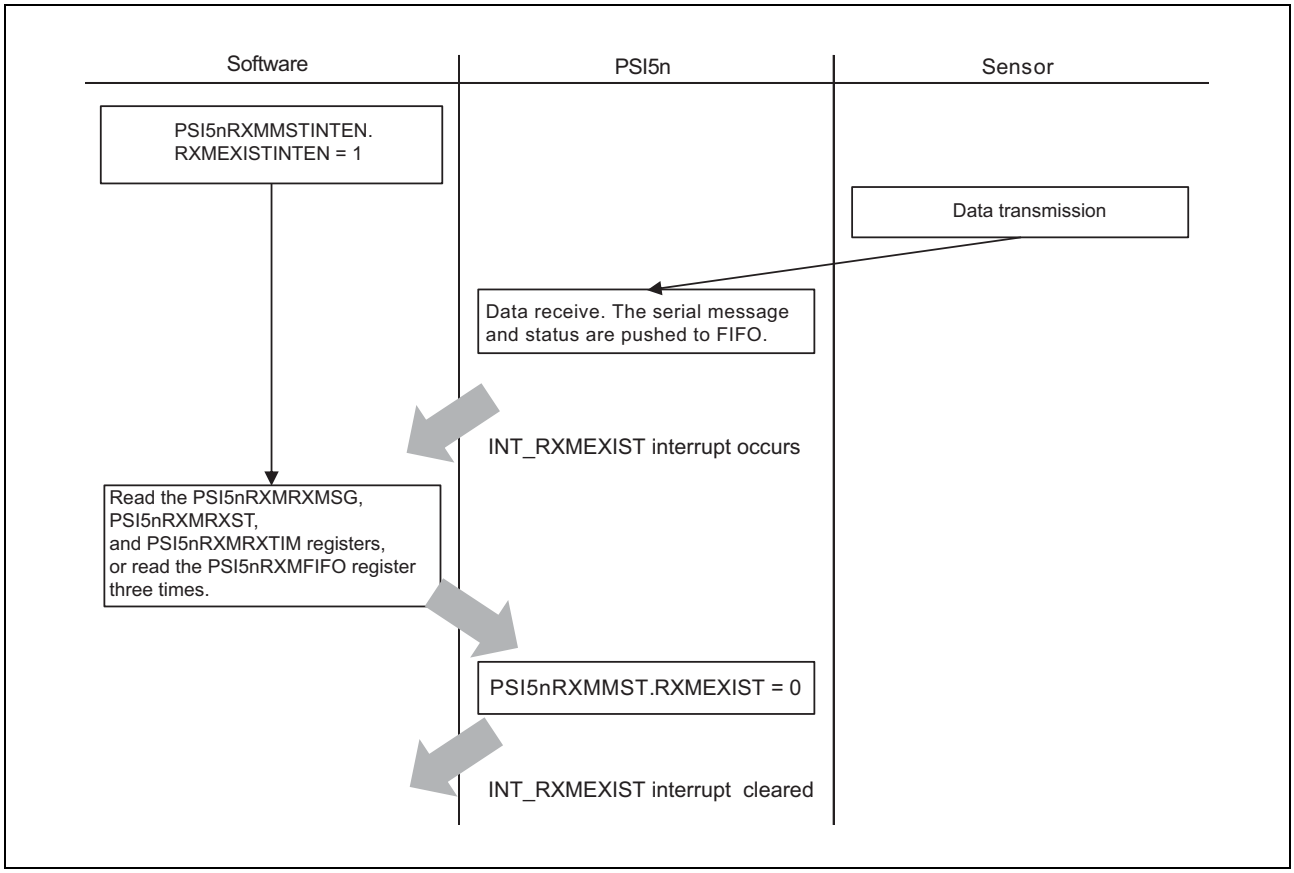

Figure 20.12 Serial Message Reception Flow

20.5.2.5 Parity and CRC Errors in Received Data

Error flags (PSI5nRXMODST.RXDERR and PSI5nRXMMST.RXMERR) are set in response to the detection of parity or CRC errors in received data. Reception operations proceed whether or not errors are detected.

Each of the error flags has a corresponding clearing bit (PSI5nRXMODSTCLR.RXDERRCLR and PSI5nRXMMSTCLR.RXMERRCLR).

20.5.2.5.1 Operation after Error Detection in Asynchronous Mode and PAS Compatibility Mode

When external noise and so on lead to errors in the Manchester code during the reception of data while the PSI5 is in the asynchronous mode or PAS compatibility mode, reception of the data being received is assumed to be complete, the parity or CRC error flag is set, and the data are stored in the reception FIFO buffer. Even when only a single error in the Manchester code occurs, the next data reception soon commences. Due to this specification, even if external noise while data are being received leads to a single error in the Manchester code occurring, the start bit for the following data is assumed, and reception starts. In this situation, if multiple errors in the Manchester code occur, multiple reception-complete interrupts can be generated. In such cases, the maximum number of errors corresponds to the number of bits in the unit of data.

Accordingly, this raises the possibility of producing an overflow. Whether or not the uptake of data envisaged at the time of system design is proceeding, an overflow being produced indicates the possibility of noise and so on having led to malfunctions in transfer.

In synchronous mode, data reception is halted at slot n + 1 in response to an error in the Manchester code while reception in slot n is in progress. Accordingly, further errors in slot n are ignored even if the data are resent.

20.5.3 PAS Compatibility Mode

The RH850/P1x has a PAS compatibility mode. The PAS compatibility mode supported by the RH850/P1x is as shown in **Table 20.7**.

In PAS compatibility mode, set 1 in PSI5nRXS1SET.PASCMP. At that time, set 0 (parity) in PSI5nRXS1SET.ERRDET.

20.5.4 Baud Rate

The communication clock is generated, by dividing 1 cycle of psi5_com_clk by 1 to 2^{16}.

1 bit cycle waveform = (value set in PSI5nOPMBITRATE.BITRATECNT) / psi5_com_clk

Baud rate = 1/1 bit cycle waveform

The following shows an example baud rate setting.

Table 20.53 Example Baud Rate Setting

Baud Rate [Kbps]	psi5_com_clk		Value Set in PSI5nOPMBITRATE. BITRATECNT	Bit Time [µs]
	Frequency [MHz]	Cycle [ns]		
125	80	12.5	$29F_H$	8.4
189	80	12.5	$1BC_H$	5.57
250	80	12.5	$14F_H$	4.2

Section 21 Window Watchdog Timer (WDTA)

This section contains a generic description of the Window Watchdog Timer (WDTA).

The first part of this section describes all RH850/P1x specific properties, such as the number of units, register base addresses, etc.

The remainder of the section describes the functions and registers of WDTA.

21.1 Features of RH850/P1x WDTA

21.1.1 Units and Channels

This microcontroller has the following number of WDTA units.

Table 21.1 Units

Product	RH850/P1x 100 pins	RH850/P1x 144 pins
Number of Units	1	
Name	WDTAn (n = 0)	

Table 21.2 Unit Configurations and Channels

Unit Name WDTAn	Channels per Unit	RH850/P1x 100 pins (1 ch)	RH850/P1x 144 pins (1 ch)
WDTA0	1	√	√

Note: The channel names are same as those of the corresponding units.

Table 21.3 Index

Index	Meaning
n	Throughout this section, the individual WDTA units are identified by the index “n” (n = 0): for example, WDTAnWDTE (n = 0) is the WDTAn enable register.

21.1.2 Register Base Address

WDTAn base addresses are listed in the following table.

WDTAn register addresses are given as offsets from the base addresses in general.

Table 21.4 Register Base Address

Base Address Name	Base Address
<WDTA0_base>	$FFD7\ 4000_H$

21.1.3 Clock Supply

Clock supply by and to WDTAn is listed in the following table.

Table 21.5 Clock Supply

Unit Name	Clock for the Unit	Supply Clock Name
WDTA0	PCLK	High-speed peripheral clock CLK_HSB
	WDTATCKI	High-speed mode: High-speed internal oscillator (HS IntOSC): 8 MHz Low-speed mode: High-speed internal oscillator (HS IntOSC)/32: 250 kHz

21.1.4 Interrupt Request

WDTAn interrupt requests are listed in the following table.

Table 21.6 Interrupt Requests

Unit Interrupt Signal	Outline	Interrupt Number	DMA Trigger Number
WDTA0			
INTWDTAn	WDTA0 75% interrupt	9	—

21.1.5 Reset Sources

WDTAn reset sources are listed in the following table. WDTAn is initialized by the following reset source.

Table 21.7 Reset Source

Unit Name	Reset Source
WDTA0	Reset controller SYSRES

21.2 Overview

21.2.1 Functional Overview

The WDTA has the following functions:

- Selection of the operation mode after release from the reset state, by using start-up options

Starting/stopping of the counter after reset, the setting of the overflow time of the counter, enabling/disabling of the VAC function, and clock mode can be selected. WDTA startup options are described in **Table 21.8, WDTA Start-up Options**.

- WDTA trigger function

Writing an activation code to the WDTA trigger register starts WDTA and restarts the counter. Activation codes include fixed activation codes and variable activation codes (VAC function). In a variable activation code, a different value from the previous time (variable value) is written to the WDTA trigger register, which causes the counter to be restarted.

- 75% interrupt request signals

An interrupt request signal can be generated when the WDTA counter reaches 75% of the overflow interval time (this function can be enabled or disabled by the setting of WDTAnMD.WDTAnWIE).

- Window function

The period during which writing to the WDTA trigger register is valid (window-open period) can be set. Writing to the WDTA trigger register at a time outside the window-open period causes an error.

- WDTA error detection function

When an error is detected, an error signal WDTAnTERR is generated. The error signal WDTAnTERR is connected to the ECM module.
For details about the error sources, refer to **Section 21.5.3, WDTA Error Detection**.

Table 21.8 WDTA Start-up Options

Start-up Option	Function	Description	Option Byte
OPWDRUN	Start mode setting	Specifies the start mode: 0: Software trigger start mode 1: Default start mode For details, refer to **Section 21.5.1, WDTA after Release from the Reset State**.	OPBT0.OPBT0[31]
OPWDOVF[2:0]	Overflow interval time reset value setting	Specifies the reset value of the overflow interval time control bits WDTAnMD.WDTAnOVF[2:0].	OPBT0.OPBT0[27:25]
OPWDVAC	Variable Activation Code (VAC) selection	Specifies the trigger register for the generation of counter re-start triggers to keep the counter from overflowing. 0: WDTAnWDTE (fixed) 1: WDTAnEVAC (variable) When WDTAnWDTE is selected, the value to be written to the register (activation code) is fixed (AC_H). When WDTAnEVAC is selected, the activation code to be written to the register is variable. For details, refer to **Section 21.5.2, WDTA Trigger**, **Section 21.5.2.1, Calculating an Activation Code when the VAC Function is Used**.	OPBT0.OPBT0[22]
OPWDMDS	Clock mode selection	Selects the counter clock source of WDTAn. 0: High-speed mode (high-speed internal oscillation: 8 MHz) 1: Low-speed mode (high-speed internal oscillation/32: 250 kHz)	OPBT0.OPBT0[21]

21.2.2 Block Diagram

Figure 21.1 shows the main components of the WDTA.

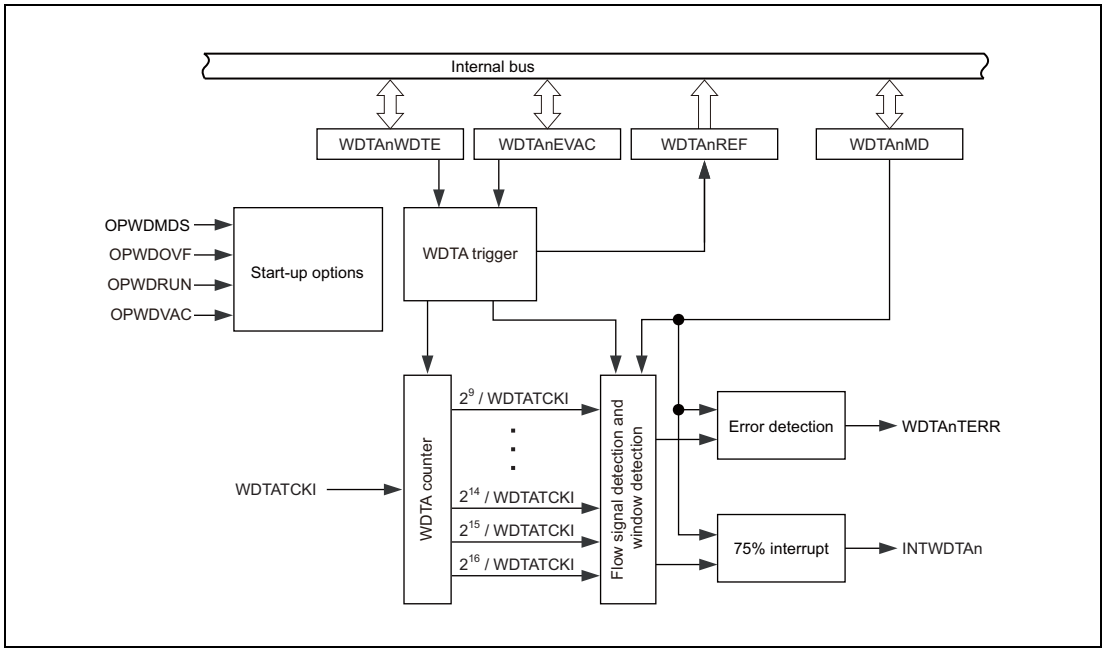

Figure 21.1 Block Diagram of the WDTA

21.3 Registers

21.3.1 List of Registers

WDTA registers are listed in the following table.

For details about <WDTA_base>, see **Section 21.1.2, Register Base Address**.

Table 21.9 Registers

Module	Register	Symbol	Address
WDTAn	WDTA enable register	WDTAnWDTE	<WDTAn_base> + 0000_H
WDTAn	WDTA enable VAC register	WDTAnEVAC	<WDTAn_base> + 0004_H
WDTAn	WDTA reference value register	WDTAnREF	<WDTAn_base> + 0008_H
WDTAn	WDTA mode register	WDTAnMD	<WDTAn_base> + $000C_H$

21.3.2 WDTAnWDTE — WDTA Enable Register

This register is the WDTA trigger register if the VAC function is not used (start-up option OPWDVAC = 0).

Writing AC_H to this register generates a WDTA trigger and starts or restarts the WDTA counter. Refer to **Section 21.5.2, WDTA Trigger**, for details.

The behavior of this register depends on the setting of the start-up option (OPWDVAC). Refer to **Table 21.12, WDTAnWDTE Behavior**.

Access: This register can be read/written in 8-bit units.

Address: <WDTAn_base> + 0000_H

Value after reset: The initial value depends on the start-up options OPWDRUN and OPWDVAC. Refer to **Table 21.11, WDTAnRUN Value after a Reset**.
This register is initialized by a reset of any type.

Bit	7	6	5	4	3	2	1	0
	WDTAnRUN[7:0]							
Value after reset		0	1	0	1	1	0	0
R/W	R/W	R/W	R/W	R/W	R/W	R/W	R/W	R/W

Table 21.10 WDTAnWDTE Register Contents

Bit Position	Bit Name	Function
7 to 0	WDTAnRUN [7:0]	Writing a fixed activation code (AC_H) generates a WDTA trigger to control WDTAn count start and restart. Writing a value other than ACH generates an error. After WDTAn starts, it cannot be stopped. When these bits are read or written, see **Table 21.12, WDTAnWDTE Behavior**.

The WDTAnRUN7 bit is only valid if the VAC function is disabled (OPWDVAC = 0). **Table 21.11** lists the values of the WDTAnRUN7 bit after reset according to the start-up options.

Table 21.11 WDTAnRUN Value after a Reset

Start-up options		Start Mode	Value of WDTAnRUN7 after Reset
OPWDVAC	OPWDRUN		
0	1	Default start	1
	0	Software trigger start	0

The behavior of WDTAnWDTE during read/write accesses depends on the OPWDVAC setting, as shown in **Table 21.12, WDTAnWDTE Behavior**.

Table 21.12 WDTAnWDTE Behavior

OPWDVAC	Description	WDTAnWDTE	
		Read	Write
0	The VAC function is disabled. WDTAnWDTE is enabled.	$2C_H$ is read (before WDTAn starts in software trigger start mode). AC_H is read (after WDTAn has started).	WDTA trigger Write AC_H*1
1	The VAC function is enabled. WDTAnWDTE is disabled.	$2C_H$ is read.	Writing is ignored.

Note 1. Any other write value will cause an error.

21.3.3 WDTAnEVAC — WDTA Enable VAC Register

This register is the WDTA trigger register when the VAC function is used (start-up option OPWDVAC = 1).

Writing a correct activation code to this register generates a WDTA trigger and starts or restarts the WDTA counter. For details, see **Section 21.5.2, WDTA Trigger**. For details about the activation codes when the VAC function is used, see **Section 21.5.2.1, Calculating an Activation Code when the VAC Function is Used**.

The behavior of this register depends on the setting of the start-up option (OPWDVAC). Refer to **Table 21.15, WDTAnEVAC Behavior**.

Access: This register can be read/written in 8-bit units.

Address: <WDTAn_base> + 0004_H

Value after reset: The initial value depends on the start-up options OPWDRUN and OPWDVAC. Refer to **Table 21.14, WDTAnEVAC7 Value after a Reset**.
This register is initialized by a reset of any type.

Bit	7	6	5	4	3	2	1	0
	WDTAnEVAC[7:0]							
Value after reset		0	1	0	1	1	0	0
R/W	R/W	R/W	R/W	R/W	R/W	R/W	R/W	R/W

Table 21.13 WDTAnEVAC Register Contents

Bit Position	Bit Name	Function
7 to 0	WDTAnEVAC [7:0]	Writing a variable activation code generates a WDTA trigger to control WDTAn count start and restart. Writing an incorrect value generates an error. After WDTAn starts, it cannot be stopped. When these bits are read or written, see **Table 21.15, WDTAnEVAC Behavior**

The WDTAnEVAC7 bit is only valid if the VAC function is enabled (OPWDVAC = 1). **Table 21.14** lists the values of the WDTAnEVAC7 bit after reset according to the start-up options.

Table 21.14 WDTAnEVAC7 Value after a Reset

Start-up options		Start Mode	Value of WDTAnEVAC7 after a Reset
OPWDVAC	OPWDRUN		
1	1	Default start	1
	0	Software trigger start	0

The behavior of WDTAnEVAC during read/write accesses depends on the OPWDVAC setting, as shown in **Table 21.15**.

Table 21.15 WDTAnEVAC Behavior

OPWDVAC	Description	WDTAnEVAC	
		Read	Write
0	The VAC function is disabled. WDTAnEVAC is disabled.	$2C_H$ is read.	Writing is ignored.
1	The VAC function is enabled. WDTAnEVAC is enabled.	$2C_H$ is read (before WDTAn starts in software trigger start mode). The variable activation code written last is read (after WDTAn has started).	Write the variable activation code*[1]. For details, see **Section 21.5.2.1, Calculating an Activation Code when the VAC Function is Used**.

Note 1. Any other write value will cause an error.

21.3.4 WDTAnREF — WDTA Reference Value Register

This register contains the reference value for calculating the activation code of the VAC function. It is automatically updated after every trigger operation. For details, see **Section 21.5.2.1, Calculating an Activation Code when the VAC Function is Used**.

If VAC function is disabled (OPWDVAC = 0), reading this register returns 00_H.

Access: This register can be read in 8-bit units.

Address: <WDTAn_base> + 0008_H

Value after reset: 00_H This register is initialized by a reset of any type.

Bit	7	6	5	4	3	2	1	0
	WDTAnREF[7:0]							
Value after reset	0	0	0	0	0	0	0	0
R/W	R	R	R	R	R	R	R	R

Table 21.16 WDTAnREF Register Contents

Bit Position	Bit Name	Function
7 to 0	WDTAnREF[7:0]	Reference value to calculate activation code of VAC function.

21.3.5 WDTAnMD — WDTA Mode Register

This register specifies the overflow interval time, the 75% interrupt enable/disable, and the window-open period.

The value of this register can be updated only once after release from the reset state and before the first WDTA trigger is generated. The updated value will be effective after the WDTA trigger register is written to.

When this register is updated after the first WDTA trigger has been generated, an error occurs. No error occurs when the same value is written to it.

Access: This register can be read/written in 8-bit units.

Address: <WDTAn_base> + $000C_H$

Value after reset: The initial value depends on the start-up options OPWDOVF[2:0].
Refer to **Table 21.8, WDTA Start-up Options**.
This register is initialized by a reset of any type.

Bit	7	6	5	4	3	2	1	0
	—	WDTAnOVF[2:0]			WDTAnWIE	—	WDTAnWS[1:0]	
Value after reset	0	*1	*1	*1	0	1	1	1
R/W	R	R/W	R/W	R/W	R/W	R/W	R/W	R/W

Note 1. The WDTAnOVF[2:0] value after reset can be set by the start-up options OPWDOVF[2:0].

Table 21.17 WDTAnMD Register Contents (1/2)

Bit Position	Bit Name	Function
7	Reserved	When writing, write the value after reset.
6 to 4	WDTAnOVF[2:0]	Select the overflow interval time:

WDTAn OVF2	WDTAn OVF1	WDTAn OVF0	Overflow interval time
0	0	0	2^9/ WDTATCKI
0	0	1	2^{10}/ WDTATCKI
0	1	0	2^{11}/ WDTATCKI
0	1	1	2^{12}/ WDTATCKI
1	0	0	2^{13}/ WDTATCKI
1	0	1	2^{14}/ WDTATCKI
1	1	0	2^{15}/ WDTATCKI
1	1	1	2^{16}/ WDTATCKI

- WDTATCKI frequency can be selected from the following two count clocks by the start-up option OPBT0[21].
  - High-speed mode (high-speed internal oscillation: 8 MHz)
  - Low-speed mode (high-speed internal oscillation/32: 250 kHz)

3	WDTAnWIE	Enables or disables the 75% interrupt request INTWDTAn: 0: INTWDTAn disabled 1: INTWDTAn enabled
2	Reserved	When writing, write the value after reset.

Table 21.17 WDTAnMD Register Contents (2/2)

Bit Position	Bit Name	Function
1, 0	WDTAnWS[1:0]	Select the window-open period:

WDTAn WS1	WDTAn WS0	Window-open Period
0	0	25%
0	1	50%
1	0	75%
1	1	100%

21.4 Interrupt Sources

The WDTA detects the status of the WDTA counter value or illegal accesses to the WDTA-related registers, and generates an interrupt request. The following are WDTA interrupt requests:

(1) INTWDTAn (WDTA timer count 75% interrupt request)
An interrupt request signal is generated at 75% of the counter overflow time of the WDTA timer. An interrupt request signal can be set to be enabled or disabled by using the WDTA mode register (WDTAnMD).

(2) WDTAnTERR (WDTA error signal)
Detection of a WDTA error generates an error signal WDTAnTERR.
The WDTAnTERR signal is connected to the ECM module.

21.5 Function

21.5.1 WDTA after Release from the Reset State

21.5.1.1 Start Modes

There are two start modes (software start mode and default start mode) when WDTAn starts after release from the reset state. The start mode can be selected by the start-up option. The start modes are listed in **Table 21.18**.

Table 21.18 Start Mode Selection

Start-up options		
OPWDRUN	**Start mode**	**Description**
0	Software trigger	• The WDTA counter stops (0000_H) after release from the reset state. • Writing an activation code to the WDTA trigger register starts WDTA.
1	Default start mode	The WDTA counter starts after release from the reset state.

21.5.1.2 Count Clock Selection

The count clock WDTATCKI can be selected by the start-up options.

The selection of the count clock WDTATCKI is listed in **Table 21.19**.

Table 21.19 Count Clock Selection

Start-up Options		
OPWDMDS	**Mode**	**Count Clock**
0	High-speed mode	High-speed internal oscillation (8 MHz)
1	Low-speed mode	High-speed internal oscillation/32 (250 kHz)

21.5.1.3 WDTA Settings after Release From The Reset State,

Table 21.20 shows the WDTA settings after release from the Reset State,.

Table 21.20 WDTA Settings after Release From The Reset State,

Function	Setting	Remark
Start mode	Specified by start-up options	
VAC function		
Count clock selection		
WDTA overflow interval time	Specified by start-up options	Modification is possible only once by the setting of the WDTA mode register (WDTAnMD).
75% interrupt mode	75% interrupt disabled	
Behavior on error detection	Error signal WDTAnTERR generation	
Window-open period	100%	

The setting of the WDTA mode register (WDTAnMD) is enabled when the first WDTA trigger is generated (writing an activation code to WDTAnWDTE and WDTAnEVAC). Change the setting of the WDTAnMD register before a WDTA trigger is generated.

Setting of WDTA by using WDTAnMD is possible only once. If the value set for WDTAnMD is changed after a WDTA trigger is generated, an error occurs. However, an error does not occur if the same value has been set.

21.5.1.4 Default Start Mode Timing

The default start mode timing and the changes to the WDTA settings are illustrated in **Figure 21.2**.

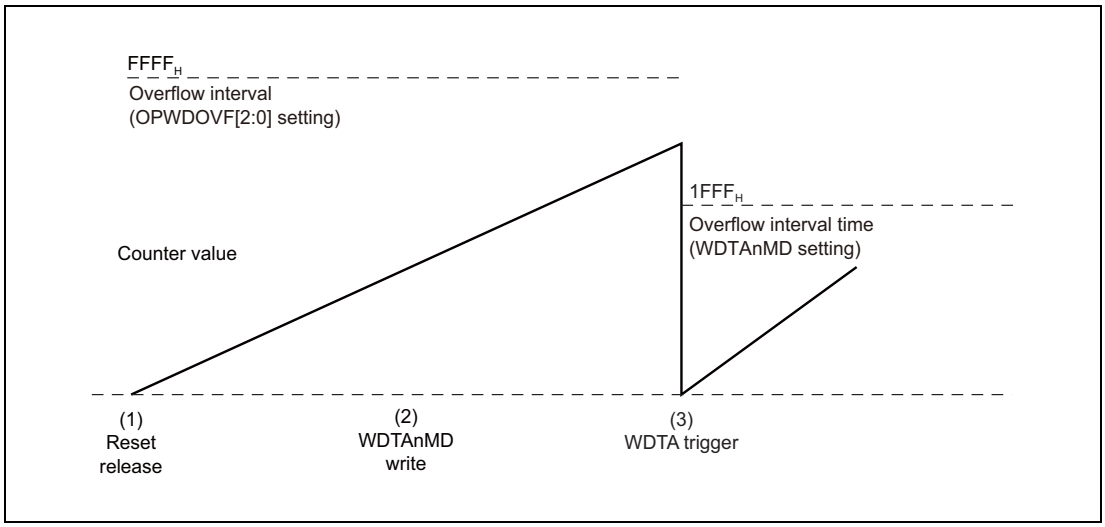

Figure 21.2 Timing Diagram of WDTA Start in Default Start Mode

The timing diagram shown in **Figure 21.2** shows the following behaviors:

(1) In default start mode, the WDTA counter starts after release from the reset state,. The overflow interval time after release from the reset state, is set by start-up options.
Example: Overflow interval time after release from the reset state,
$= 2^{16}$/WDTATCKI (OPWDOVF[2:0] = 111_B)

(2) WDTAnMD is set before a WDTA trigger is generated. Note, however, that the setting is not applied immediately.

(3) Write to the WDTA trigger register before the WDTA counter overflows.
The WDTAnMD setting is applied due to the WDTA trigger.
Example: Overflow interval time after a WDTA trigger is generated
$= 2^{13}$/WDTATCKI

21.5.1.5 Software Trigger Start Mode Timing

The software trigger start mode timing and the changes to the WDTA settings are illustrated in **Figure 21.3**.

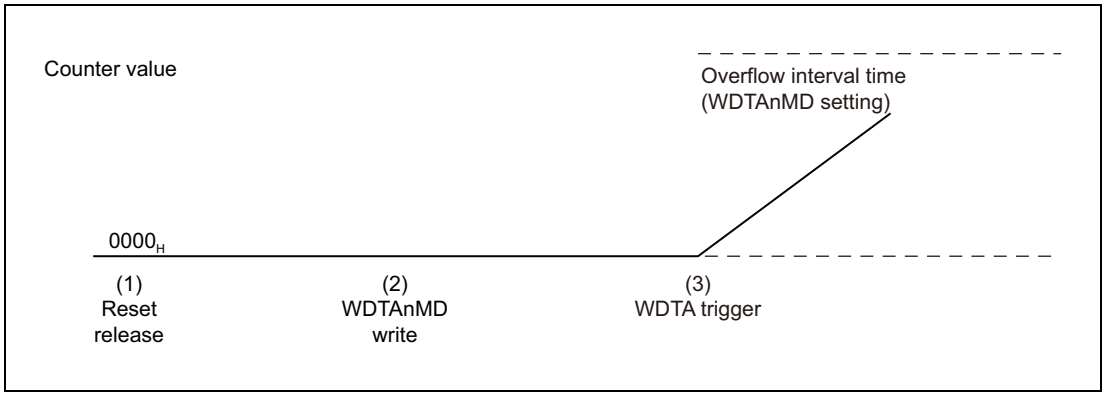

Figure 21.3 Timing Diagram of WDTA Start in Software Trigger Start Mode

The timing diagram above shows the following:

(1) After release from the reset state,, the counter remains 0000_H until the first trigger.
The count clock is specified by the start-up options, but it does not have any effect.

(2) WDTAnMD is written before the first trigger. However, the settings are not applied immediately.

(3) The WDTA counter starts at the first WDTA trigger.
The count clock and other settings specified in WDTAnMD are applied.

21.5.2 WDTA Trigger

Writing a special value called an activation code to the WDTA enable register (WDTAnWDTE) and the WDTA enable VAC register (WDTAnEVAC) leads to generation of a WDTA trigger.

The WDTA trigger has the following functions:

- Starting the WDTA counter in software trigger start mode
- Restarting the WDTA counter
- WDTA mode setting by the WDTAnMD register (only for the first WDTA trigger after release from the reset state,)

The WDTA trigger register, which generates a WDTA trigger, is specified by the start-up option OPWDVAC.

Table 21.21 lists the WDTA trigger registers and activation codes.

Table 21.21 WDTA Trigger Register and Activation Code

Type of activation code	Trigger register	Activation code
Fixed (OPWDVAC = 0)	WDTAnWDTE	AC_H
Variable (OPWDVAC = 1)	WDTAnEVAC	For details, refer to **Section 21.5.2.1, Calculating an Activation Code when the VAC Function is Used**.

21.5.2.1 Calculating an Activation Code when the VAC Function is Used

Use the following expression to calculate the variable activation code (ExpectWDTE) to be set to the WDTA trigger register (WDTAnEVAC) when the VAC function is used, by using the WDTA reference value register (WDTAnREF):

$$\text{ExpectWDTE} = AC_H - \text{WDTAnREF (old)}$$

Note that the value in the WDTAnREF register is updated every time a activation code is written to the trigger register WDTAnEVAC. Use the following expression to calculate the updated value of the WDTAnREF register:

WDTAnREF (new) = (rotate the value of ExpectWDTE to the left by 1 bit)

Table 21.22 lists the variable activation codes according to the number of WDTA triggers.

Table 21.22 Expected Variable Activation Code Development

No*1	WDTAnREF (old)		ExpectWDTE (AC_H - WDTAnREF)		WDTAnREF (new)	
0	0000 0000	00_H	1010 1100	AC_H	0101 1001	59_H
1	0101 1001	59_H	0101 0011	53_H	1010 0110	$A6_H$
2	1010 0110	$A6_H$	0000 0110	06_H	0000 1100	$0C_H$
…	…	…	…	…	…	…

Note 1. Number of triggers after reset

NOTE

Writing an incorrect activation code generates an error.

21.5.3 WDTA Error Detection

WDTA detects an error, including generation of WDTA count overflow or illegal operations.
The following shows when a WDTA error is detected:

- WDTA counter overflow
- Wrong activation code is written to the WDTA trigger register.
- Writing to the trigger register at a time outside the window-open period
- When it is attempted to change the setting value of the WDTA mode register WDTAnMD after the first WDTA trigger has been generated
- When updating the setting value of the WDTA mode register WDTAnMD twice before the first WDTA trigger is generated

Figure 21.4 shows generation of an error signal WDTAnTERR when default mode is selected and the counter overflows.

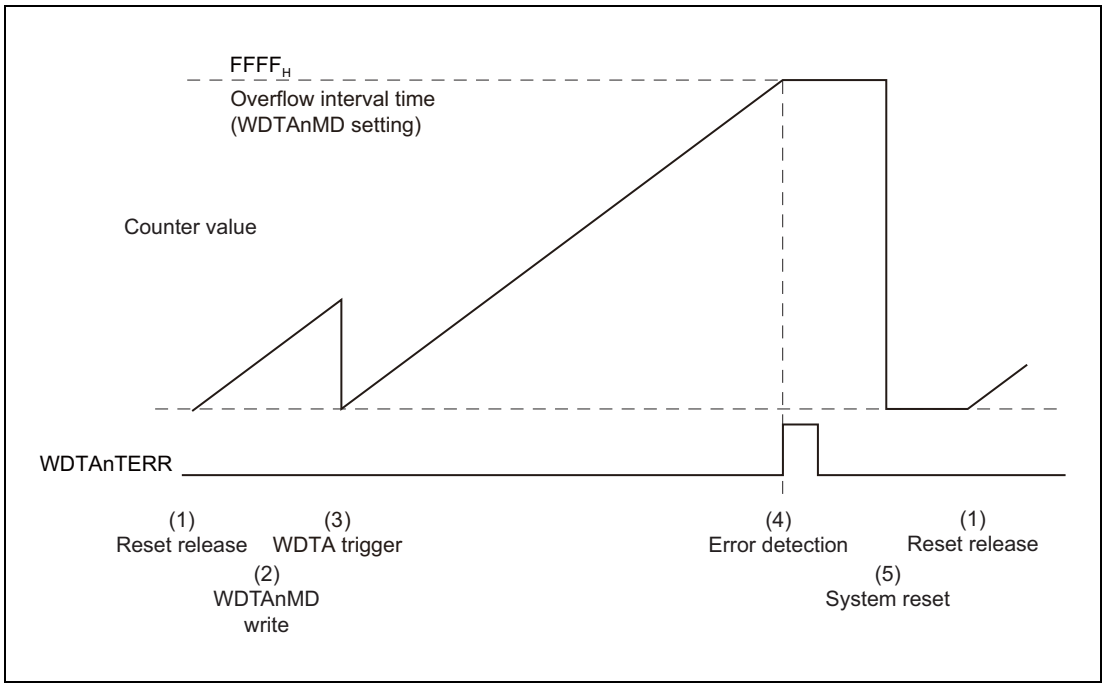

Figure 21.4 Timing Diagram of WDTA Error Signal WDTAnTERR Generation

The timing diagram above shows the following:

(1) In default start mode, the WDTA counter starts after release from the reset state,. The overflow interval time after release from the reset state, is set by start-up options.

(2) WDTAnMD is set before a WDTA trigger is generated. In this case, 2^{16}/WDTATCKI is set for the overflow interval time.

(3) The WDTAnMD setting is applied due to the WDTA trigger.

(4) When the counter overflows, an error is detected. An error signal WDRAnTERR is generated. The counter value remains until a system reset is performed.

(5) When the system is reset, the counter is cleared and stopped until release from the reset state.

21.5.4 75% Interrupt Request Signals

When the WDTA counter reaches 75% of the time set for the overflow interval, the interrupt request INTWDTAn is generated.

By use of WDTAnMD.WDTAnWIE this function can be enabled or disabled afterwards.

Figure 21.5 shows the 75% interrupt request generation under following conditions:

- Default start mode selected
- 75% interrupt request is enabled after the first WDTA trigger is generated
- WDTA overflow interval time: 2^{16}/WDTATCKI

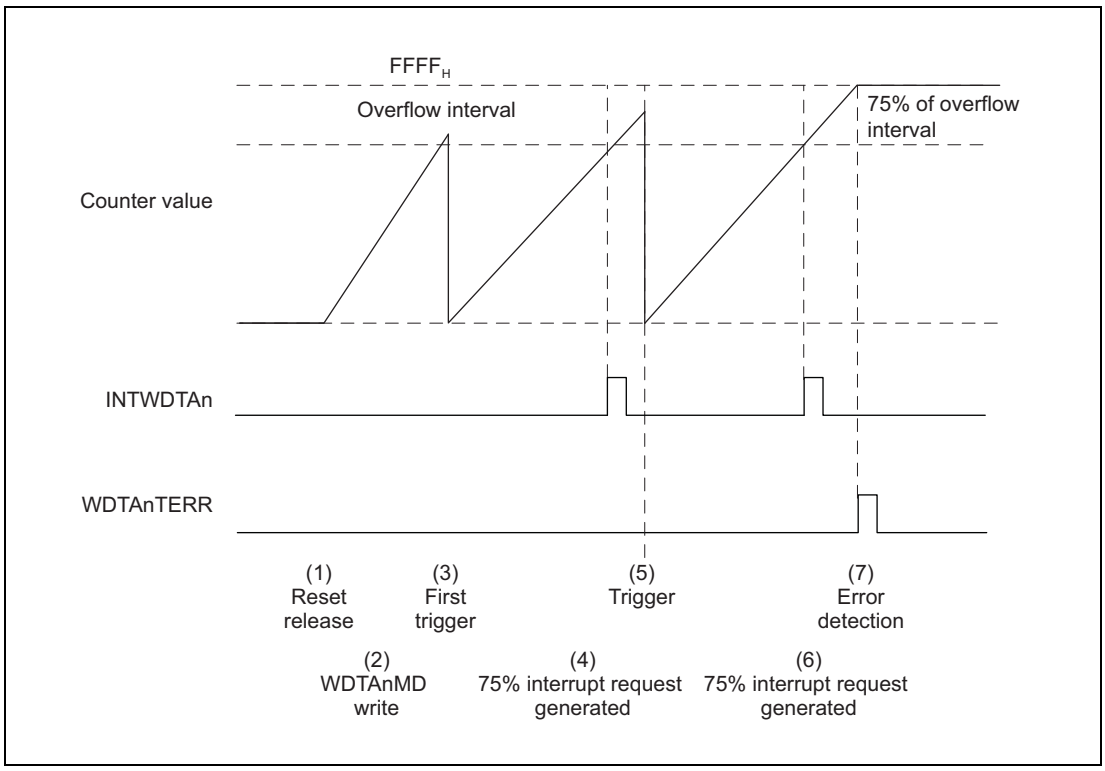

Figure 21.5 Timing Diagram of WDTA 75% Interrupt Request Signals

(1) In default start mod, WDTA count starts after reset is released.
The overflow interval time period after reset is released is set by the start-up options.

(2) WDTAnMD is set before the WDTA trigger is generated. In this figure, 2^{16}/WDTATCKI is set as the overflow interval time period.

(3) The WDTAnMD setting is applied at the WDTA trigger.

(4) When the WDTA counter reaches 75% of the set overflow interval time, an interrupt request INTWDTAn is generated.

(5) The count restarts at the WDTA trigger.

(6) When the WDTA counter reaches 75% of the set overflow interval time, an interrupt request INTWDTAn is generated.

(7) When the counter overflows, an error is detected. An error signal WDTAnTERR is generated. The counter value remains unchanged until a system reset is performed.

21.5.5 Window Function

The period when a WDTA trigger is valid (window-open period) can be set. If the window-open period is set to the value less than 100%, an error occurs by the WDTA trigger generated not in the window-open period. The window-open period after release from the reset state, is 100%. The period is set to the value by the WDTAnMD.WDTAnWS[1:0] setting after the first WDTA trigger is generated.

Figure 21.6 shows window function operations under the following conditions.

- Default start mode is selected.
- The 25% window open period is valid (WDTAnWS[1:0] = 00_B) after the first WDTA trigger
- WDTA overflow interval time period: 2^{16}/WDTATCKI

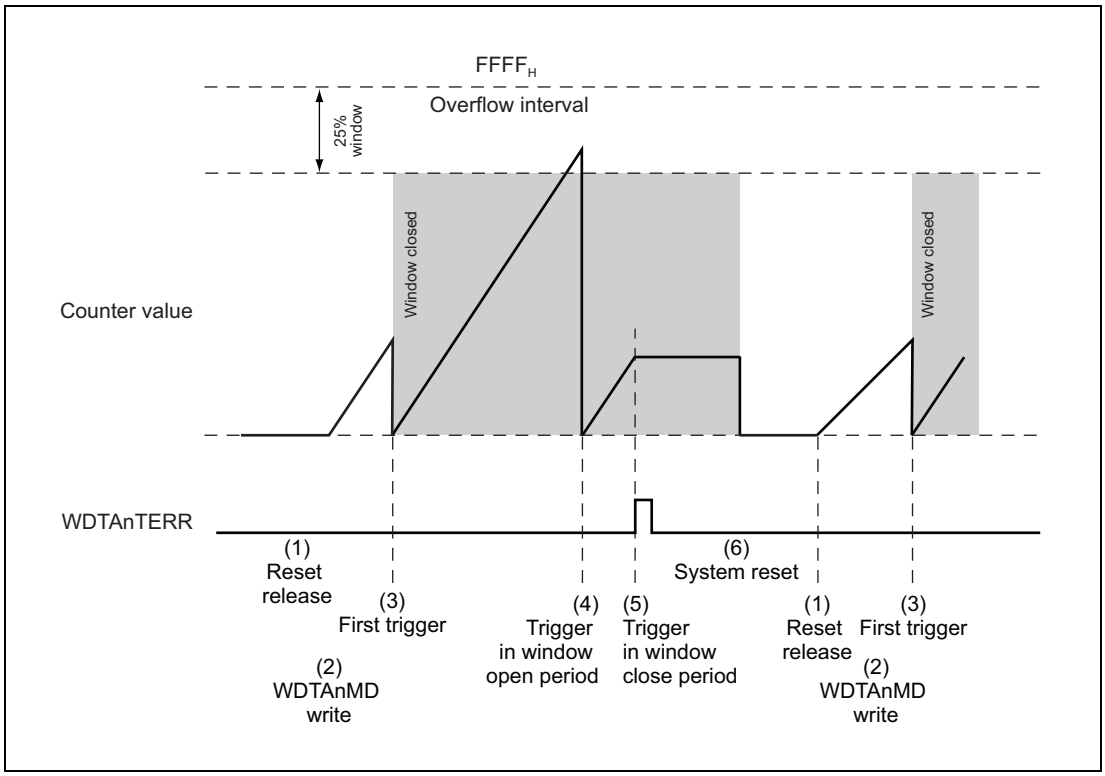

Figure 21.6 Timing Diagram of WDTA Window Function

(1) In default start mode, WDTA count starts after reset is released.
The overflow interval time period after reset is released is set by the start-up options.

(2) WDTAnMD is set before the WDTA trigger is generated. In this figure, 2^{16}/WDTATCKI is set as the overflow interval time period.

(3) The WDTAnMD setting is applied at the WDTA trigger.

(4) WDTA count restarts at the WDTA trigger during the window open period.

(5) An error is detected at the WDTA trigger during the window close period.
An error signal WDTAnTERR is generated. The counter value remains unchanged until a system reset is performed.

(6) When the system is reset, the counter is cleared and stops until the reset is released.

Section 22 OS Timer (OSTM)

This section contains a generic description of the OS Timer (OSTM).

The first part of this section describes all RH850/P1x specific properties, such as the number of units, register base addresses, etc. The remainder of the section describes the functions and registers of the OSTM.

22.1 Features of RH850/P1x OSTMn

22.1.1 Number of Units

This microcontroller has the following number of units of the OSTMn.

Table 22.1 Units

Product	RH850/P1x
Number of Units	7
Name	OSTM0, OSTM1, and OSTM3 to OSTM7

Table 22.2 Index

Index	Meaning
n	Throughout this section, the individual OSTMn units are identified by the index “n”: for example, OSTMnCNT is the OSTMn counter register.

22.1.2 Register Base Addresses

OSTMn base addresses are listed in the following table.

OSTMn register addresses are given as offsets from these base addresses.

Table 22.3 Register Base Address

Base Address Name	Base Address
<OSTM0_base>	FFDD 8000_H
<OSTM1_base>	FFDD 9000_H
<OSTM3_base>	FFD7 0000_H
<OSTM4_base>	FFD7 0040_H
<OSTM5_base>	FFD7 0080_H
<OSTM6_base>	FFD7 $00C0_H$
<OSTM7_base>	FFD7 0100_H

22.1.3 Clock Supply

Clock supply by and to OSTMn is listed in the following table.

Table 22.4 Clock Supply

Unit Name	Clock for the Unit	Clock Supply Name
OSTM0	PCLK	High speed peripheral clock CLK_HSB*1
OSTM1	PCLK	High speed peripheral clock CLK_HSB*1
OSTM3	PCLK	High speed peripheral clock CLK_HSB
OSTM4	PCLK	High speed peripheral clock CLK_HSB
OSTM5	PCLK	High speed peripheral clock CLK_HSB
OSTM6	PCLK	High speed peripheral clock CLK_HSB
OSTM7	PCLK	High speed peripheral clock CLK_HSB

Note 1. A counter-clock-enable signal (OSTMnTCKE) is selectable as the counter source clock. Refer to **Section 22.2.3, Counter clock**.

22.1.4 Interrupt Request

OSTMn interrupt requests are listed in the following table.

Table 22.5 Interrupt Requests

Unit Interrupt Signal	Outline	Interrupt Number	DMA/DTS Trigger Number
OSTM0			
INTOSTM0	OSTM0 interrupt	74	—
OSTM1			
INTOSTM1	OSTM1 interrupt	75	—
OSTM3			
INTOSTM3	OSTM3 interrupt	(FEINT)	—
OSTM4			
INTOSTM4	OSTM4 interrupt	(FEINT)	—
OSTM5			
INTOSTM5	OSTM5 interrupt	(FEINT)	—
OSTM6			
INTOSTM6	OSTM6 interrupt	(FEINT)	—
OSTM7			
INTOSTM7	OSTM7 interrupt	(FEINT)	—

22.1.5 Reset Sources

An OSTMn reset source is listed in the following table. OSTMn is initialized by the following reset source.

Table 22.6 Reset Sources

Unit Name	Reset Source
OSTMn	Reset controller SYSRES

22.1.6 External Input/Output Signal

An OSTMn input/output signals are listed in the following table.

Table 22.7 External Input/Output Signal

Unit Signal Name	Outline	Alternative Port Signal Name
OSTM0:		
OSTM0TTOUT	OSTM0 output	OSTM0O
OSTM1:		
OSTM1TTOUT	OSTM1 output	OSTM1O

22.2 Overview

Each OSTMn is a 32-bit timer/counter.

OSTMn can be used in interval timer mode or in free-running comparison mode. The settings for operating mode specify the direction of counting (up or down) in control of the generation of interrupt requests.

The OSTMn is synchronized with other peripheral modules by the counter-clock-enable signal (OSTMnTCKE) and the count start signal (OSTMnTSST).

22.2.1 Functional Overview

The OSTMn has the following features.

- Two operating modes
  - Interval timer mode
  - Free-running comparison mode
- INTOSTMn interrupt
- Generation of an output signal from the OSTMnO pin (OSTM0, OSTM1)
  - Software control mode
  - Timer output toggle mode
- Using the timing protection timer (TPT) to monitor times
  - Monitoring of the times taken in processing tasks and interrupts is possible by using INTOSTM3 to INTOSTM7 assigned as FEINT interrupts.

22.2.2 Block Diagram

The following block diagram shows the main components of the OSTMn.

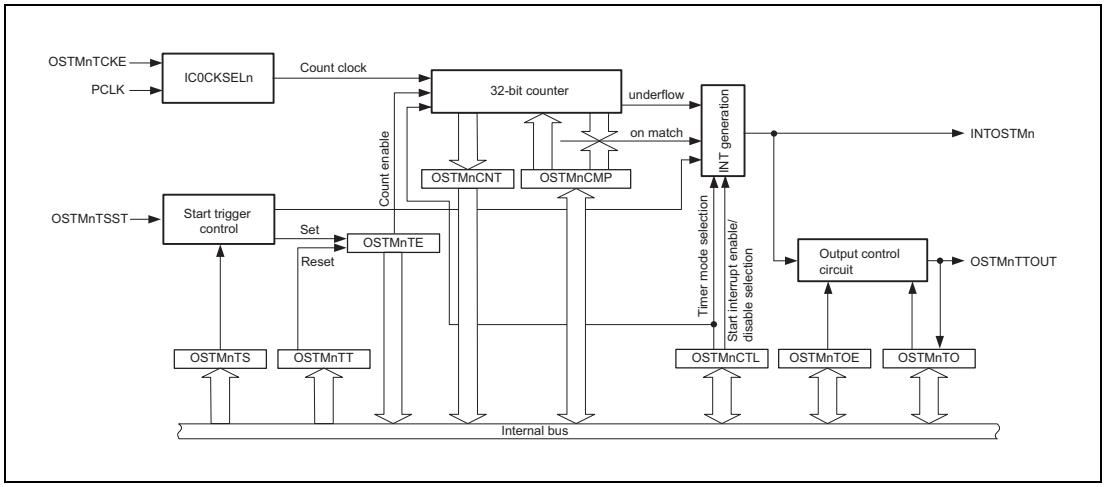

Figure 22.1 Block Diagram of the OSTMn (OSTM0, OSTM1)

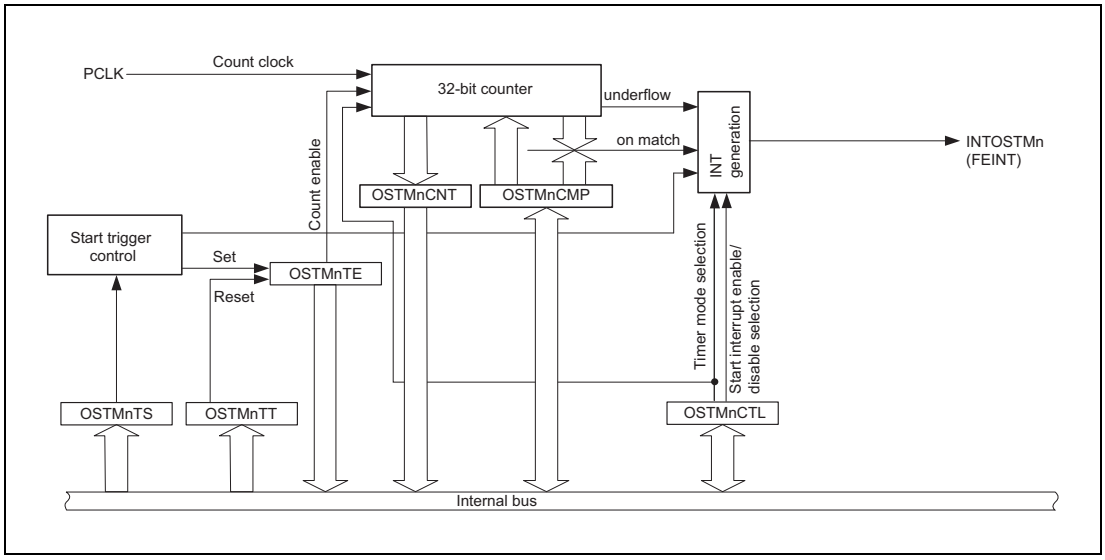

Figure 22.2 Block Diagram of the OSTMn (OSTM3 to OSTM7)

22.2.3 Counter clock

The clock signals for counting by OSTM0 and OSTM1 are defined by PCLK and OSTMnTCKE in the following ways. The count signals for counting by OSTM3 to OSTM7 are always defined by PCLK.

- If C0KSELn.IC0TMENn = 0, the OSTMnTCKE signal being at the high level (logical 1) selects counting of cycles of PCLK.
- IC0KSELn.IC0TMENn being set to 1 selects the TAUDn or TAUJn signal as the counter-clock-enable signal, OSTMnTCKE. The cycles of the clock signals for counting by OSTMn are synchronized with the cycles of the clock signals generated as TAUDn or TAUJn (any from among CK0 to CK3).

This is illustrated in the following figures.

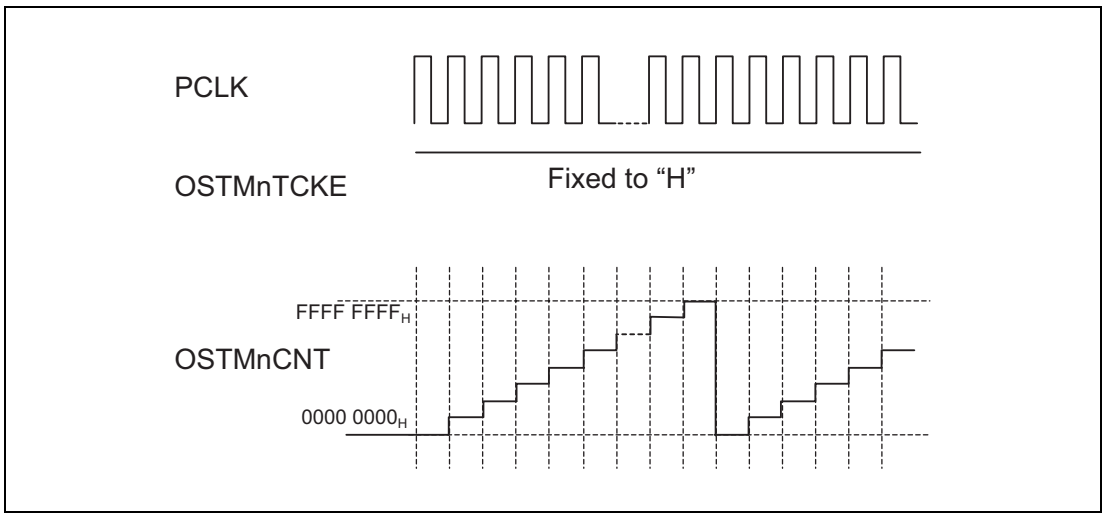

Figure 22.3 Counting when OSTMnTCKE is Fixed to H

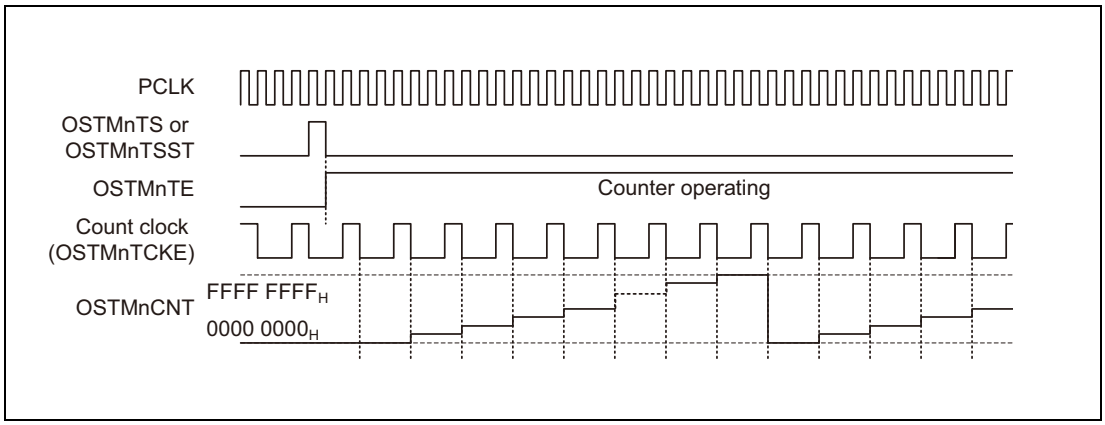

Figure 22.4 Counting in Response to Transitions of the OSTMnTCKE Input Signal

The counter-clock-enable signal (OSTMnTCKE) for each OSTMn can be selected by the IC0CKSEL0 or IC0CKSEL1 register from among 40 channels: 16 channels from each of TAUD0 and TAUD1, and 4 channels from each of TAUJ0 and TAUJ1.

For the counter-clock-enable signals for TAUDn and TAUJn (TAUDnTCKENm and TAUJnTCKENm) and the clock signals generated in TAUDn and TAUJn (CK0 to CK3), see **Figure 23.2** and **Figure 24.2**.

CAUTIONS

1. **Select a counter-clock-enable signal for OSTMn while the operation of OSTMn is stopped (the OSTMnTE.OSTMnTE bit is 0).**
2. **After using the IC0CKSELn.IC0TMSELn[1:0], IC0CKSELn.IC0CKSELn3[1:0], IC0CKSELn.IC0CKSELn2[1:0], IC0CKSELn.IC0CKSELn1[3:0], and IC0CKSELn.IC0CKSELn0[3:0] bits to select the counter-clock-enable signal for OSTMn, set the IC0CKSELn.IC0TMENn bit to 1.**
3. **If TAUDn or TAUJn is selected as the source of the counter-clock-enable signal for OSTMn (the IC0CKSELn.IC0TMENn bit is 1), do not change the operation of TAUDn or TAUJn while the OSTMn is operating (the OSTMnTE.OSTMnTE bit is 1).**

   [Setting procedure]
   - **(1) Confirm that the OSTMnTE.OSTMnTE bit is 0 (OSTMn operation is stopped).**
   - **(2) Set the IC0CKSELn.IC0TMSELn[1:0], IC0CKSELn.IC0CKSELn3[1:0], IC0CKSELn.IC0CKSELn2[1:0], IC0CKSELn.IC0CKSELn1[3:0], and IC0CKSELn.IC0CKSELn0[3:0] bits to select the counter-clock enable signal for the OSTMn.**
   - **(3) Set the IC0CKSELn.IC0TMENn bit to 1.**
   - **(4) Enable OSTMn operation by setting the OSTMnTS.OSTMnTS bit to 1.**
4. **Operating system timers OSTM3 to OSTM7 do not have IC0CKSELn registers. Only PCLK is available as the clock for counting.**

22.2.4 Output Modes (OSTM0 and OSTM1)

The OSTMn has the following output modes. The mode is selected by the setting of the OSTMnTOE.OSTMnTOE bit.

- Software control mode (the OSTMnTOE.OSTMnTOE bit is 0): The value set in the OSTMnTO.OSTMnTO bit is output to OSTMnTTOUT.
- Timer-output toggling mode (the OSTMnTOE.OSTMnTOE bit is 1): The OSTMnTTOUT output is toggled each time an INTOSTMn request is generated.

Both output modes are illustrated in the following figure.

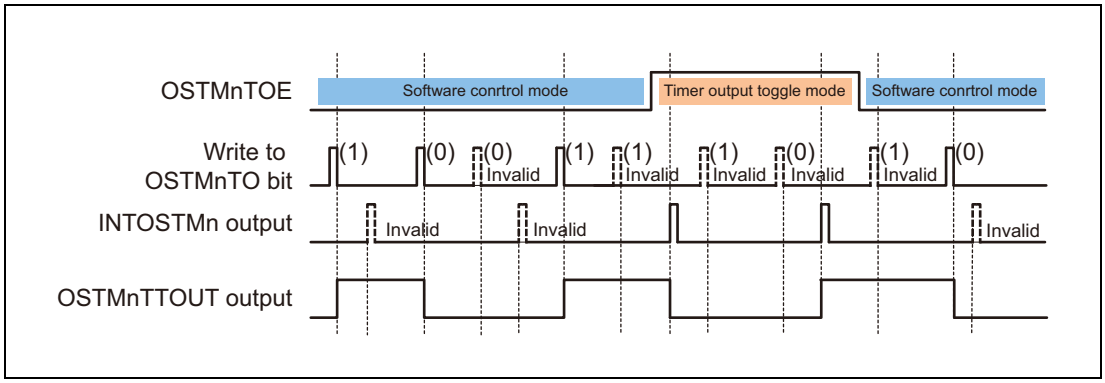

Figure 22.5 Timing Diagram of Output Modes

The above timing diagram shows the following operations.

- In software control mode, the level of the OSTMnTTOUT output changes in accord with the value set in the OSTMnTO.OSTMnTO bit.
- In timer-output toggling mode, the value of the OSTMnTO.OSTMnTO bit and level of the OSTMnTTOUT output are toggled each time an INTOSTMn interrupt request is generated.

22.2.5 Interrupt Requests (INTOSTMn)

An INTOSTMn interrupt request is generated on counter underflow (interval timer mode) or when the counter matches the compare value (free-running comparison mode).

An interrupt request can also be generated on starting and restarting of the counter. This is controlled by the OSTMnCTL.OSTMnMD0 bit.

The INTOSTMn is the trigger for toggling of the OSTMnTTOUT output in the timer output toggling mode (OSTMnTOE.OSTMnTOE = 1), so the setting of the OSTMnCTL.OSTMnMD0 bit also affects OSTMnTTOUT output.

This is illustrated in the following figure.

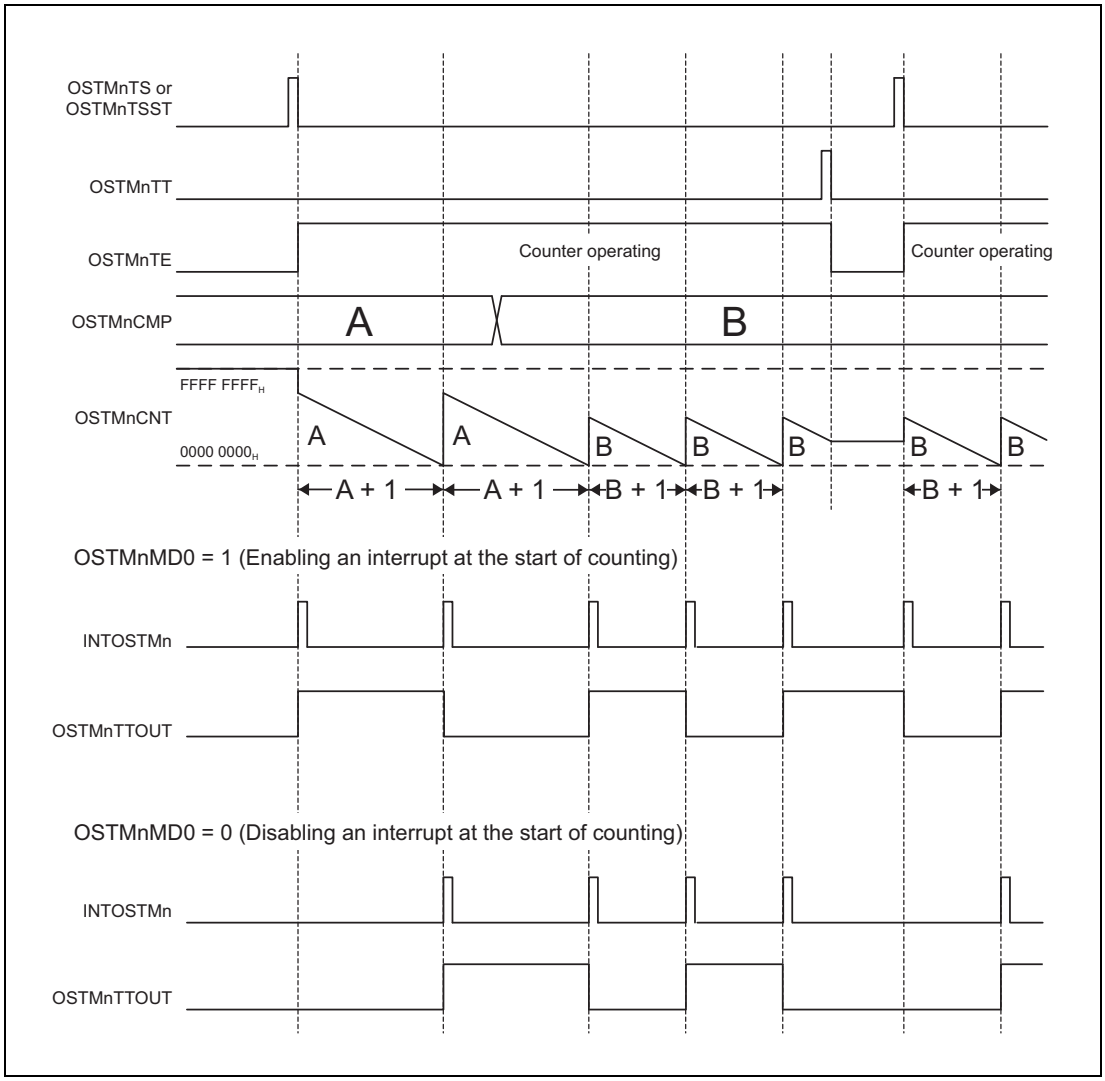

Figure 22.6 Generating an Interrupt when Counting Starts (Interval Timer Mode)

22.3 Registers

22.3.1 List of Registers

OSTMn registers are listed in the following table.

For details about <OSTMn_base>, see **Section 22.1.2, Register Base Addresses**.

Table 22.8 List of Registers

Module Name	Register Name	Symbol	Address
OSTMn	OSTMn compare register	OSTMnCMP	<OSTMn_base> + 00_H
OSTMn	OSTMn counter register	OSTMnCNT	<OSTMn_base> + 04_H
OSTMn	OSTMn output register	OSTMnTO	<OSTMn_base> + 08_H
OSTMn	OSTMn output enable register	OSTMnTOE	<OSTMn_base> + $0C_H$
OSTMn	OSTMn count enable status register	OSTMnTE	<OSTMn_base> + 10_H
OSTMn	OSTMn count start trigger register	OSTMnTS	<OSTMn_base> + 14_H
OSTMn	OSTMn count stop trigger register	OSTMnTT	<OSTMn_base> + 18_H
OSTMn	OSTMn control register	OSTMnCTL	<OSTMn_base> + 20_H
OSTM	OSTM0 clock select register	IC0CKSEL0	FFDD 6000_H
OSTM	OSTM1 clock select register	IC0CKSEL1	FFDD 6004_H

22.3.2 Details of OSTMn Registers

22.3.2.1 OSTMnCMP — OSTMn Compare Register

This register stores the start value of the down-counter or the value with which the counter is compared, depending on the mode of operation.

Access: This register can be read/written in 32-bit units.

Address: <OSTMn_base> + 00_H

Value after reset: $0000\ 0000_H$. This register is initialized by a reset of any type.

Bit	31	30	29	28	27	26	25	24	23	22	21	20	19	18	17	16
	OSTMnCMP[31:16]															
Value after reset	0	0	0	0	0	0	0	0	0	0	0	0	0	0	0	0
R/W	R/W	R/W	R/W	R/W	R/W	R/W	R/W	R/W	R/W	R/W	R/W	R/W	R/W	R/W	R/W	R/W

Bit	15	14	13	12	11	10	9	8	7	6	5	4	3	2	1	0
	OSTMnCMP[15:0]															
Value after reset	0	0	0	0	0	0	0	0	0	0	0	0	0	0	0	0
R/W	R/W	R/W	R/W	R/W	R/W	R/W	R/W	R/W	R/W	R/W	R/W	R/W	R/W	R/W	R/W	R/W

Table 22.9 OSTMnCMP Register Contents

Bit Position	Bit Name	Function
31 to 0	OSTMnCMP [31:0]	• In interval timer mode: start value of the down-counter • In free-running comparison mode: compare value

22.3.2.2 OSTMnCNT — OSTMn Counter Register

This register indicates the counter value of the timer.

Access: This register can be read in 32-bit units.

Address: <OSTMn_base> + 04_H

Value after reset: FFFF $FFFF_H$. This register is initialized by a reset of any type.

Bit	31	30	29	28	27	26	25	24	23	22	21	20	19	18	17	16
	OSTMnCNT[31:16]															
Value after reset	1	1	1	1	1	1	1	1	1	1	1	1	1	1	1	1
R/W	R	R	R	R	R	R	R	R	R	R	R	R	R	R	R	R

Bit	15	14	13	12	11	10	9	8	7	6	5	4	3	2	1	0
	OSTMnCNT[15:0]															
Value after reset	1	1	1	1	1	1	1	1	1	1	1	1	1	1	1	1
R/W	R	R	R	R	R	R	R	R	R	R	R	R	R	R	R	R

Table 22.10 OSTMnCNT Register Contents

Bit Position	Bit Name	Function
31 to 0	OSTMnCNT [31:0]	Timer counter value

Table 22.11 shows the correspondence between operating mode, counting direction and start value of the OSTMn. The start value is the value read from the counter after a change to the operating mode.

Table 22.11 Correspondence between Operating Mode, Counting Direction and Start Value

Timer operating mode	OSTMnCTL.OSTMnMD1	Counting direction	Start value
Interval timer mode	0*1	Down	FFFF $FFFF_H$
Free-running comparison mode	1	Up	0000 0000_H

Note 1. Value after reset.

OSTMnCNT is loaded with the value in the OSTMnCMP register if it is in interval timer mode or with the counter value 0000 0000_H if it is in free-running comparison mode at the start of a cycle of counting after OSTMnTE has become 1.

22.3.2.3 OSTMnTO — OSTMn Output Register

The OSTM Output Register is used to specify and read the level of an OSTMnTTOUT output signal. The setting of this register is only valid in OSTMn (n = 0, 1).

Access: This register can be read/written in 8-bit units. Writing can only proceed when the software control mode is selected (OSTMnTOE.OSTMnTOE = 0).

Address: <OSTMn_base>+ 08_H

Value after reset: 00_H
This register is initialized by a reset from any source.

Bit	7	6	5	4	3	2	1	0
	—	—	—	—	—	—	—	OSTMnTO
Value after reset	0	0	0	0	0	0	0	0
R/W	R	R	R	R	R	R	R	R/W

Table 22.12 OSTMnTO Register Contents

Bit Position	Bit Name	Function
7 to 1	Reserved	When read, the value after reset is read. When writing, write the value after reset.
0	OSTMnTO	This bit specifies or indicates the level of the OSTMnTTOUT output signal. 0: Low level 1: High level

22.3.2.4 OSTMnTOE — OSTMn Output Enable Register

The OSTM Output Enable Register specifies OSTMnTTOUT output mode. The setting of this register is only valid in OSTMn (n = 0, 1).

Access: This register can be read/written in 8-bit units.

Address: <OSTMn_base>+ $0C_H$

Value after reset: 00_H
This register is initialized by a reset from any source.

Bit	7	6	5	4	3	2	1	0
	—	—	—	—	—	—	—	OSTMnTOE
Value after reset	0	0	0	0	0	0	0	0
R/W	R	R	R	R	R	R	R	R/W

Table 22.13 OSTMnTOE Register Contents

Bit Position	Bit Name	Function
7 to 1	Reserved	When read, the value after reset is read. When writing, write the value after reset.
0	OSTMnTOE	This bit specifies the OSTMnTTOUT output mode. 0: Software control mode: The level corresponding to the setting of OSTMnTO.OSTMnTO is output to OSTMnTTOUT. 1: Timer-output toggling mode: OSTMnTTOUT output is toggled whenever an INTOSTMn interrupt request is generated.

22.3.2.5 OSTMnTE — OSTMn Count Enable Status Register

This register indicates whether the counter is enabled or disabled.

Access: This register can only be read in 8-bit units.

Address: <OSTMn_base> + 10_H

Value after reset: 00_H. This register is initialized by a reset of any type.

Bit	7	6	5	4	3	2	1	0
	—	—	—	—	—	—	—	OSTMnTE
Value after reset	0	0	0	0	0	0	0	0
R/W	R	R	R	R	R	R	R	R

Table 22.14 OSTMnTE Register Contents

Bit Position	Bit Name	Function
7 to 1	Reserved	When read, the value after reset is read.
0	OSTMnTE	Indicates whether the counter is enabled or disabled: 0: Counter disabled 1: Counter enabled This bit is set to 1 in response to OSTMnTS.OSTMnTS being set to 1, or to OSTMnTSST being 1. Setting OSTMnTT.OSTMnTT to 1 resets this bit to 0.

NOTE

If the counter is disabled, the counter value OSTMnCNT retains its value.

If the counter is restarted, it

- restarts counting down from the value in the OSTMnCMP register if it is in interval timer mode or
- restarts counting up from the counter value 0000 0000_H if it is in free-running comparison mode.

22.3.2.6 OSTMnTS — OSTMn Count Start Trigger Register

This register starts the counter.

Access: This register can only be written in 8-bit units. It is always read as 00_H.

Address: <OSTMn_base> + 14_H

Value after reset: 00_H. This register is initialized by a reset of any type.

Bit	7	6	5	4	3	2	1	0
	—	—	—	—	—	—	—	OSTMnTS
Value after reset	0	0	0	0	0	0	0	0
R/W	R	R	R	R	R	R	R	W

Table 22.15 OSTMnTS Register Contents

Bit Position	Bit Name	Function
7 to 1	Reserved	When writing, write the value after reset.
0	OSTMnTS	Starts the counter: 0: This setting disables the counter. 1: Starts the counter and sets OSTMnTE.OSTMnTE = 1. • In interval timer mode, a forced restart is executed if this bit is set while OSTMnTE.OSTMnTE = 1. • In free-running comparison mode, setting this bit is ignored as long as OSTMnTE.OSTMnTE = 1.

22.3.2.7 OSTMnTT — OSTMn Count Stop Trigger Register

This register stops the counter.

Access: This register can only be written in 8-bit units. It is always read as 00_H.

Address: <OSTMn_base> + 18_H

Value after reset: 00_H. This register is initialized by a reset of any type.

Bit	7	6	5	4	3	2	1	0
	—	—	—	—	—	—	—	OSTMnTT
Value after reset	0	0	0	0	0	0	0	0
R/W	R	R	R	R	R	R	R	W

Table 22.16 OSTMnTT Register Contents

Bit Position	Bit Name	Function
7 to 1	Reserved	When writing, write the value after reset.
0	OSTMnTT	Stops the counter: 0: This setting disables the counter. 1: Stops the counter and clears the OSTMnTE.OSTMnTE bit.

22.3.2.8 OSTMnCTL — OSTMn Control Register

This register specifies the operating mode for the counter and controls the generation of INTOSTMn interrupt requests when counting starts.

Although this register is readable and writable, writing to it is only possible when OSTMnTE.OSTMnTE = 0; that is, the register becomes read-only when OSTMnTE.OSTMnTE = 1.

Access: This register can be read/written in 8-bit units.

Address: <OSTMn_base> + 20_H

Value after reset: 00_H. This register is initialized by a reset of any type.

Bit	7	6	5	4	3	2	1	0
	—	—	—	—	—	—	OSTMnMD1	OSTMnMD0
Value after reset	0	0	0	0	0	0	0	0
R/W	R	R	R	R	R	R	R/W	R/W

Table 22.17 OSTMnCTL Register Contents

Bit Position	Bit Name	Function
7 to 2	Reserved	When read, the value after reset is read. When writing, write the value after reset.
1	OSTMnMD1	Specifies the operating mode for the counter: 0: Interval timer mode 1: Free-running comparison mode
0	OSTMnMD0	Controls the generation of INTOSTMn interrupt requests at the start of counting: 0: Interrupts when counting starts are disabled. 1: Interrupts when counting starts are enabled.

22.3.2.9 IC0CKSEL0 — OSTM0 Clock Select Register

This register selects the counter-clock-enable signal as the clock source to drive counting for the OSTM0 counter.

Access: This register can be read/written in 16-bit units.

Address: FFDD 6000_H

Value after reset: 0000_H. This register is initialized by a reset of any type.

Bit	15	14	13	12	11	10	9	8	7	6	5	4	3	2	1	0
	IC0TMEN0	—	IC0TMSEL0 [1:0]		IC0CKSEL03 [1:0]		IC0CKSEL02 [1:0]		IC0CKSEL01 [3:0]				IC0CKSEL00 [3:0]			
Value after reset	0	0	0	0	0	0	0	0	0	0	0	0	0	0	0	0
R/W	R/W	R	R/W	R/W	R/W	R/W	R/W	R/W	R/W	R/W	R/W	R/W	R/W	R/W	R/W	R/W

Table 22.18 IC0CKSEL0 Register Contents (1/2)

Bit Position	Bit Name	Function
15	IC0TMEN0	Selects the counter-clock-enable signal for OSTM0. 0: The counter-clock-enable signal is fixed to 1 (PCLK is selected as the source of the clock signal for counting) 1: Selects the peripheral module selected by IC0TMSEL0[1:0] as the counter-clock-enable signal.
14	Reserved	When read, the value after reset is read. When writing, write the value after reset.
13, 12	IC0TMSEL0 [1:0]	Select the counter-clock-enable signal for the OSTM0 counter (Enabled only when IC0TMEN0 = 1).

IC0TMSEL0[1:0]	Selected Peripheral Function
00_B	TAUD0
01_B	TAUD1
10_B	TAUJ0
11_B	TAUJ1

Bit Position	Bit Name	Function
11, 10	IC0CKSEL03 [1:0]	Select the counter-clock-enable signal for the OSTM0 counter (Enabled only when IC0TMEN0 = 1 and IC0TMSEL0[1:0] = 11_B).

IC0CKSEL03[1:0]	Selected TAUJ1 Channel
00_B	TAUJ1 channel 0
01_B	TAUJ1 channel 1
10_B	TAUJ1 channel 2
11_B	TAUJ1 channel 3

Bit Position	Bit Name	Function
9, 8	IC0CKSEL02 [1:0]	Select the counter-clock-enable signal for the OSTM0 counter (Enabled only when IC0TMEN0 = 1 and IC0TMSEL0[1:0] = 10_B).

IC0CKSEL02[1:0]	Selected TAUJ0 Channel
00_B	TAUJ0 channel 0
01_B	TAUJ0 channel 1
10_B	TAUJ0 channel 2
11_B	TAUJ0 channel 3

Table 22.18 IC0CKSEL0 Register Contents (2/2)

Bit Position	Bit Name	Function
7 to 4	IC0CKSEL01 [3:0]	Select the counter-clock-enable signal for the OSTM0 counter (Enabled only when IC0TMEN0 = 1 and IC0TMSEL0[1:0] = 01_B). **IC0CKSEL01[3:0]** — **Selected TAUD1 Channel** 0000_B — TAUD1 channel 0 0001_B — TAUD1 channel 1 0010_B — TAUD1 channel 2 : 1101_B — TAUD1 channel 13 1110_B — TAUD1 channel 14 1111_B — TAUD1 channel 15
3 to 0	IC0CKSEL00 [3:0]	Select the counter-clock-enable signal for the OSTM0 counter (Enabled only when IC0TMEN0 = 1 and IC0TMSEL0[1:0] = 00_B). **IC0CKSEL00[3:0]** — **Selected TAUD0 Channel** 0000_B — TAUD0 channel 0 0001_B — TAUD0 channel 1 0010_B — TAUD0 channel 2 : 1101_B — TAUD0 channel 13 1110_B — TAUD0 channel 14 1111_B — TAUD0 channel 15

22.3.2.10 IC0CKSEL1 — OSTM1 Clock Select Register

This register selects the counter-clock-enable signal as the clock source to drive counting for the OSTM1 counter.

Access: This register can be read/written in 16-bit units.

Address: FFDD 6004_H

Value after reset: 0000_H. This register is initialized by a reset of any type.

Bit	15	14	13	12	11	10	9	8	7	6	5	4	3	2	1	0
	IC0TMEN1	—	IC0TMSEL1 [1:0]		IC0CKSEL13 [1:0]		IC0CKSEL12 [1:0]		IC0CKSEL11 [3:0]				IC0CKSEL10 [3:0]			
Value after reset	0	0	0	0	0	0	0	0	0	0	0	0	0	0	0	0
R/W	R/W	R	R/W	R/W	R/W	R/W	R/W	R/W	R/W	R/W	R/W	R/W	R/W	R/W	R/W	R/W

Table 22.19 IC0CKSEL1 Register Contents (1/2)

Bit Position	Bit Name	Function
15	IC0TMEN1	Selects the counter-clock-enable signal for OSTM1. 0: The counter-clock-enable signal is fixed to 1 (PCLK is selected as the source of the clock signal for counting) 1: Selects the peripheral module selected by IC0TMSEL1[1:0] as the counter-clock-enable signal.
14	Reserved	When read, the value after reset is read. When writing, write the value after reset.
13, 12	IC0TMSEL1 [1:0]	Select the counter-clock-enable signal for the OSTM1 counter (Enabled only when IC0TMEN1 = 1). **IC0TMSEL1[1:0]** — **Selected Peripheral Function** 00_B — TAUD0 01_B — TAUD1 10_B — TAUJ0 11_B — TAUJ1
11, 10	IC0CKSEL13 [1:0]	Select the counter-clock-enable signal for the OSTM1 counter (Enabled only when IC0TMEN1 = 1 and IC0TMSEL1[1:0] = 11_B). **IC0CKSEL13[1:0]** — **Selected TAUJ1 Channel** 00_B — TAUJ1 channel 0 01_B — TAUJ1 channel 1 10_B — TAUJ1 channel 2 11_B — TAUJ1 channel 3
9, 8	IC0CKSEL12 [1:0]	Select the counter-clock-enable signal for the OSTM1 counter (Enabled only when IC0TMEN1 = 1 and IC0TMSEL1[1:0] = 10_B). **IC0CKSEL12[1:0]** — **Selected TAUJ0 Channel** 00_B — TAUJ0 channel 0 01_B — TAUJ0 channel 1 10_B — TAUJ0 channel 2 11_B — TAUJ0 channel 3

Table 22.19 IC0CKSEL1 Register Contents (2/2)

Bit Position	Bit Name	Function
7 to 4	IC0CKSEL11 [3:0]	Select the counter-clock-enable signal for the OSTM1 counter (Enabled only when IC0TMEN1 = 1 and IC0TMSEL1[1:0] = 01_B). **IC0CKSEL11[3:0]** — **Selected TAUD1 Channel** 0000_B — TAUD1 channel 0 0001_B — TAUD1 channel 1 0010_B — TAUD1 channel 2 : 1101_B — TAUD1 channel 13 1110_B — TAUD1 channel 14 1111_B — TAUD1 channel 15
3 to 0	IC0CKSEL10 [3:0]	Select the counter-clock-enable signal for the OSTM1 counter (Enabled only when IC0TMEN1 = 1 and IC0TMSEL1[1:0] = 00_B). **IC0CKSEL10[3:0]** — **Selected TAUD0 Channel** 0000_B — TAUD0 channel 0 0001_B — TAUD0 channel 1 0010_B — TAUD0 channel 2 : 1101_B — TAUD0 channel 13 1110_B — TAUD0 channel 14 1111_B — TAUD0 channel 15

22.4 Operation

22.4.1 Starting and Stopping OSTMn

The OSTMn is started and stopped as follows:

Starting the timer

The timer is started in either of the following ways:

- setting the OSTMnTS.OSTMnTS bit to 1 or
- transitions of the OSTMnTSST signal from 0 to 1

The OSTMnTE.OSTMnTE status flag is set to 1.

The counter starts to count up or down in accord with the settings for operating mode. For details, refer to **Section 22.4.2, Interval Timer Mode** and **Section 22.4.3, Free-Running Comparison Mode**.

If the OSTMnTS.OSTMnTS bit is to be used to start the timer, the OSTMnTSST input must correspond to logical zero.

Stopping the timer

Setting the OSTMnTT.OSTMnTT bit to 1 stops the OSTMn.

This also clears the OSTMnTE.OSTMnTE status flag.

When the counter is stopped, the OSTMnTO register and the OSTMnCNT register retain their current values and the output signal OSTMnTTOUT stays at the same level until the next time counting is started.

Synchronous start

The OSTMnTSST signal can be used to start the timer in synchronization with other peripheral functions. Refer to **Section 29.2.3.1, Simultaneous Start Triggers Function**.

22.4.2 Interval Timer Mode

In interval timer mode, the OSTMn can be used as a reference timer generating interrupt requests at fixed intervals.

22.4.2.1 Basic Operation in Interval Timer Mode

In interval timer mode, the timer counts down from the value specified in the OSTMnCMP register. An INTOSTMn interrupt request is generated when the counter underflows (reaches $0000\ 0000_H$).

To select interval timer mode, set OSTMnCTL.OSTMnMD1 = 0.

New values can be written to the OSTMnCMP register at any time. When a new value is written while counting is in progress, the new OSTMnCMP value will only be loaded the next time the counter reaches $0000\ 0000_H$. The counter then continues with the new value.

Intervals for INTOSTMn and OSTMnTTOUT output

The intervals for INTOSTMn and OSTMnTTOUT output are as follows.

- INTOSTMn generation cycle = counter-clock cycle × (OSTMnCMP + 1)
- OSTMnTTOUT output cycle = INTOSTMn generation cycle × 2

The following figure shows the basic operation of the OSTMn in interval timer mode with counter-start interrupts enabled.

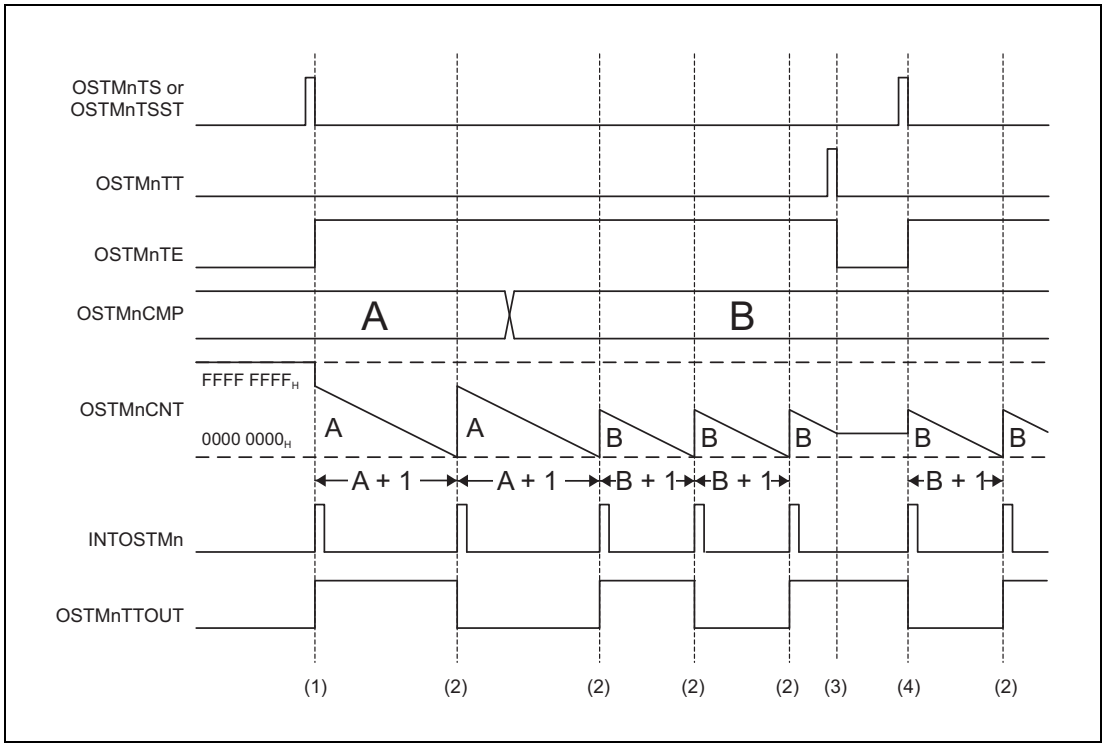

Figure 22.7 Timing Diagram of OSTMn in Interval Timer Mode

The timing diagram above shows the following:

(1) The counter starts counting when OSTMnTS.OSTMnTS = 1 or OSTMnTSST = 1. The OSTMnTE.OSTMnTE bit is set to indicate enabling of the counter.
The counter starts counting-down from the value of OSTMnCMP.
If OSTMnCTL.OSTMnMD0 is 1, INTOSTMn interrupt requests are generated at the start of counting and the OSTMnTTOUT signal is toggled. The OSTMnCNT register contains the current value as the counter.

(2) When the counter reaches 0000 0000_H, an INTOSTMn interrupt request is generated and the OSTMnTTOUT signal is toggled. The counter loads the new start value from OSTMnCMP and continues counting down.

(3) When the counter is stopped (OSTMnTT.OSTMnTT = 1), the OSTMnTE.OSTMnTE bit is cleared to indicate disabling of the counter. The counter retains its current value until it is restarted.

(4) When counting is restarted (OSTMnTS.OSTMnTS = 1, or OSTMnTSST = 1), the counter loads the new start value from OSTMnCMP and starts counting down.

Forced restart

The counter is forcibly restarted by setting OSTMnTS.OSTMnTS = 1 or by a transition of the OSTMnTSST signal from 0 to 1 during counting.

The counter loads the start value from the OSTMnCMP register and continues counting down.

The following figure shows a timing diagram in interval timer mode, with counter-start interrupts enabled (OSTMnCTL.OSTMnMD0 = 1), and in timer output toggling mode, where OSTMnTTOUT is toggled (OSTMnTOE.OSTMnTOE = 1).

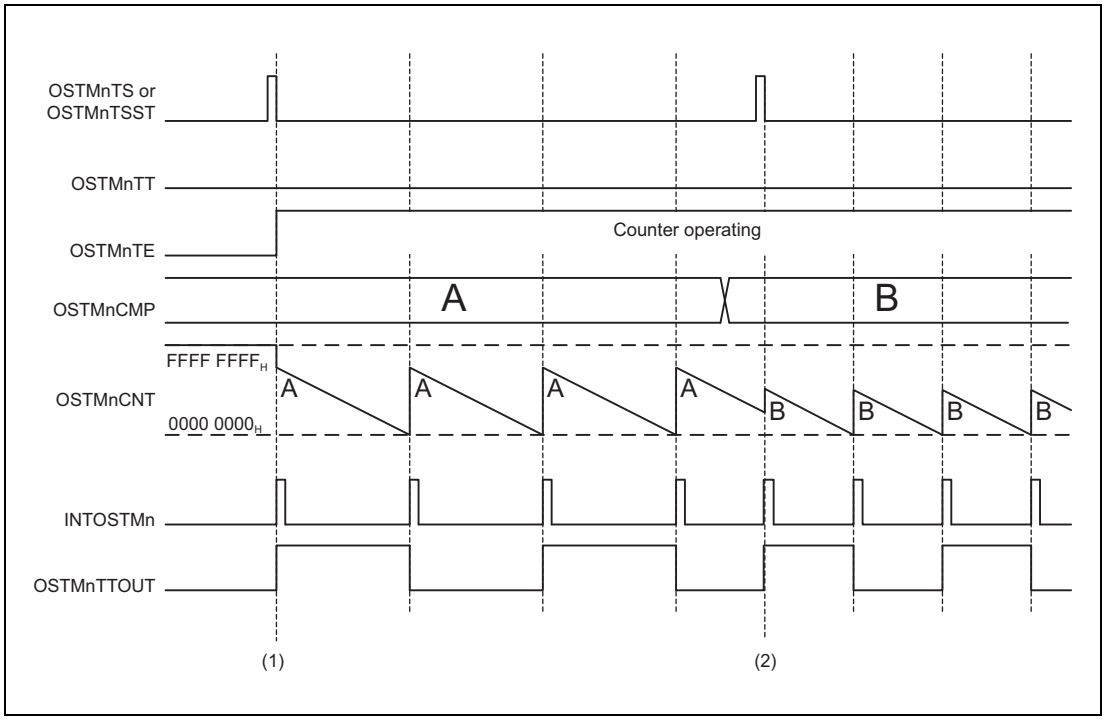

Figure 22.8 Timing Diagram of Forced Restart in Interval Timer Mode

Operations shown in the above timing diagram are as follows.

(1) The counter is started and stopped as described under **Figure 22.7, Timing Diagram of OSTMn in Interval Timer Mode**.

(2) Setting OSTMnTS.OSTMnTS = 1 or OSTMnTSST = 1 restarts the counter while counting is in progress (i.e. while OSTMnTE.OSTMnTE = 1).
The counter immediately restarts counting down, starting with the current value of OSTMnCMP.
When OSTMnCTL.OSTMnMD0 = 1, an INTOSTMn interrupt request is generated when counting starts and the OSTMnTTOUT signal is toggled.

22.4.2.2 Operation when OSTMnCMP = 0000 0000_H

When PCLK is selected as the source of the clock signal for counting and OSTMnCMP = 0000 0000_H, the OSTMn behaves as follows.

- If the counter is enabled, the INTOSTMn interrupt request will always be set to 1. The INTOSTMn interrupt request is generated only when the counter starts counting. However, the timer (OSTMnTTOUT) output signal can still be used. Timer (OSTMnTTOUT) output using timer output toggling mode results in OSTMnTTOUT being toggled on every cycle of the counter clock.

The following figure shows operations of the OSTMn when PCLK is selected as the source of the clock signal for counting and OSTMnCMP = 0000 0000_H, the counter start interrupt is enabled (OSTMnCTL.OSTMnMD0 = 1), and the timer is in timer output toggling mode, where OSTMnTTOUT is toggled (OSTMnTOE.OSTMnTOE = 1).

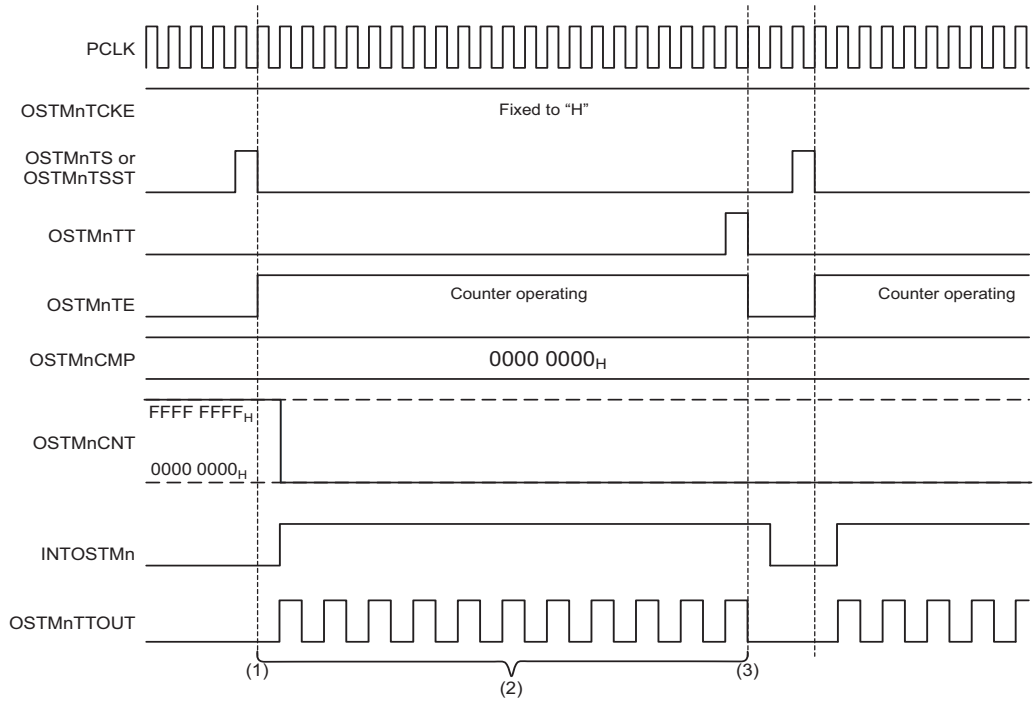

Figure 22.9 Timing Diagram when Counter Clock = PCLK (OSTMnTCKE is at High Level) and OSTMnCMP = 0000 0000_H in Interval Timer Mode

The timing diagram above shows the following operations:

(1) The counter is reloaded with the value in OSTMnCMP as soon as it starts counting, so the value 0000 0000_H is retained in OSTMnCMP.

(2) While the INTOSTMn interrupt request signal is continuously asserted, OSTMnTTOUT is toggled (in **Figure 22.9**, INTOSTMn is fixed to the high level because PCLK is selected as the counter clock).

(3) After the counter stops, the INTOSTMn interrupt request signal is deasserted and the output level of the OSTMnTTOUT signal is maintained.

When an interrupt is prohibited when the counter starts, 1 clock cycle of the counter clock is not generated at the start timing of the counter.

22.4.2.3 Setting Procedure for Interval Timer Mode

The procedure for setting up interval timer mode after release from the reset state is described below.

Setting procedure

(1) Set the start value of the counter in the OSTMnCMP register.

(2) To output OSTMnTTOUT:
- Initialize the OSTMnTO register in software control mode (OSTMnTOE.OSTMnTOE = 0).
- Select timer output toggle mode (OSTMnTOE.OSTMnTOE = 1).

(3) Select interval timer mode by clearing the OSTMnCTL.OSTMnMD1 bit.

(4) Select whether to enable or disable an interrupt when counting starts by using the OSTMnCTL.OSTMnMD0 bit.

22.4.3 Free-Running Comparison Mode

22.4.3.1 Basic Operation in Free-Running Comparison Mode

In free-running comparison mode, the counter counts up from 0000 0000_H to FFFF $FFFF_H$. When the value of the OSTMnCMP register matches the current counter value, an INTOSTMn interrupt request is generated.

When the free-running comparison mode is used, set the OSTMnCTL.OSTMnMD1 to 1.

New values can be written to the OSTMnCMP register at any time.

The following figure shows the basic operation of the OSTMn in free-running compare mode with the start of counting enabled (OSTMnCTL.OSTMnMD0 = 1) and with the timer in timer output toggling mode, where OSTMnTTOUT is toggled (OSTMnTOE.OSTMnTOE = 1).

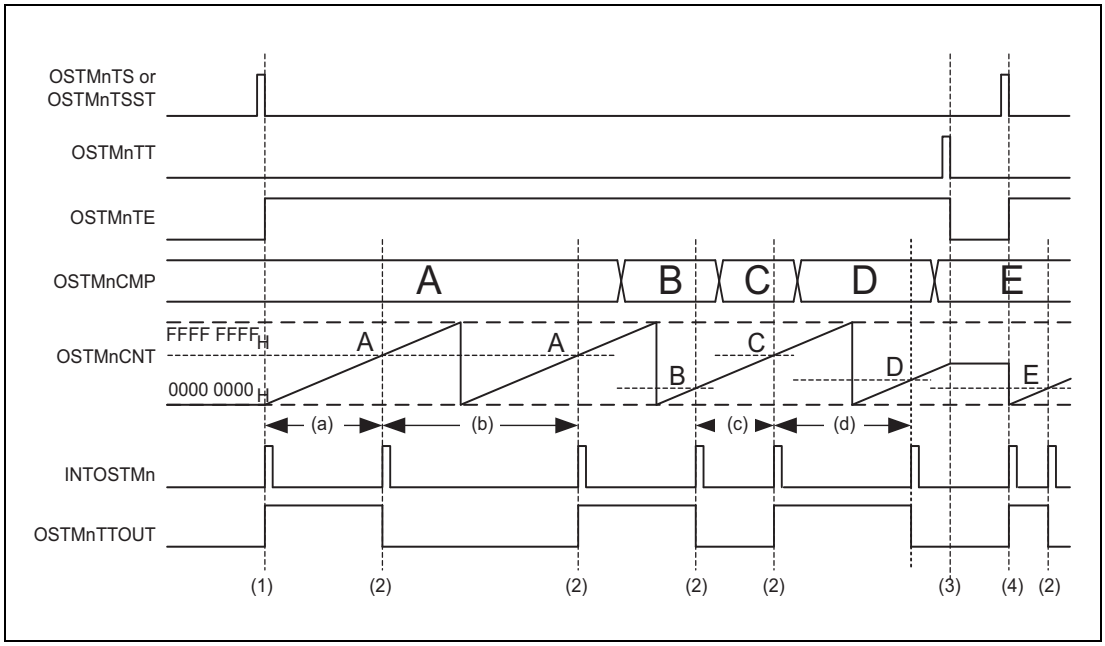

Figure 22.10 Timing Diagram of OSTMn in Free-Running Comparison Mode

The timing diagram above shows the following:

(1) The counter starts counting when OSTMnTS.OSTMnTS = 1, or when OSTMnTSST = 1. The OSTMnTE.OSTMnTE bit is set to indicate enabling of the counter. The counter counts up from 0000 0000_H to FFFF $FFFF_H$. The OSTMnCNT register is the counter, so it contains the current value. When the OSTMnCTL.OSTMnMD0 set to 1, the interrupt request INTOSTMn is generated when the counting starts.

(2) When the current counter value matches the value in the OSTMnCMP register, an INTOSTMn interrupt request is generated and the OSTMnTTOUT signal is toggled.

(3) When the counter is stopped (OSTMnTT.OSTMnTT = 1), the OSTMnTE.OSTMnTE bit is cleared to indicate disabling of the counter.
The counter retains its current value until it is restarted.

(4) Counting by the counter restarts from 0000 0000_H when OSTMnTS.OSTMnTS = 1, or when OSTMnTSST = 1.

INTOSTMn Period

The INTOSTMn generation period is different depending on the start of counting and depends on the old and new comparison values if OSTMnCMP is rewritten during operation.

Table 22.20 Timing of INTOSTMn Generation

Old value for comparison	New value for comparison	Counter value at time of rewriting	Period of INTOSTMn Generation	Label in timing diagram
Counter starts			(A + 1) × counter clock period	(a)
A	A	No rewriting	(FFFF $FFFF_H$ + 1) × counter clock period	(b)
B	C > B	B < counter value < C	(C - B) × counter clock period	(c)
C	D < C	Counter value > D,C	(FFFF $FFFF_H$ - C + D + 1) × counter clock period	(d)

Forced restart

Forced restarting does not proceed during counting even if the OSTMnTS.OSTMnTS bit is set, or if OSTMnTSST = 1. The counter ignores the attempted setting and continues counting.

22.4.3.2 Operation when OSTMnCMP = 0000 0000_H

The following figure shows the operation of the OSTMn when PCLK is selected as the source of the clock signal for counting and OSTMnCMP = 0000 0000_H, counter-start interrupts are enabled (OSTMnCTL.OSTMnMD0 = 1) and the timer is in timer output toggling mode, where OSTMnTTOUT is toggled (OSTMnTOE.OSTMnTOE = 1).

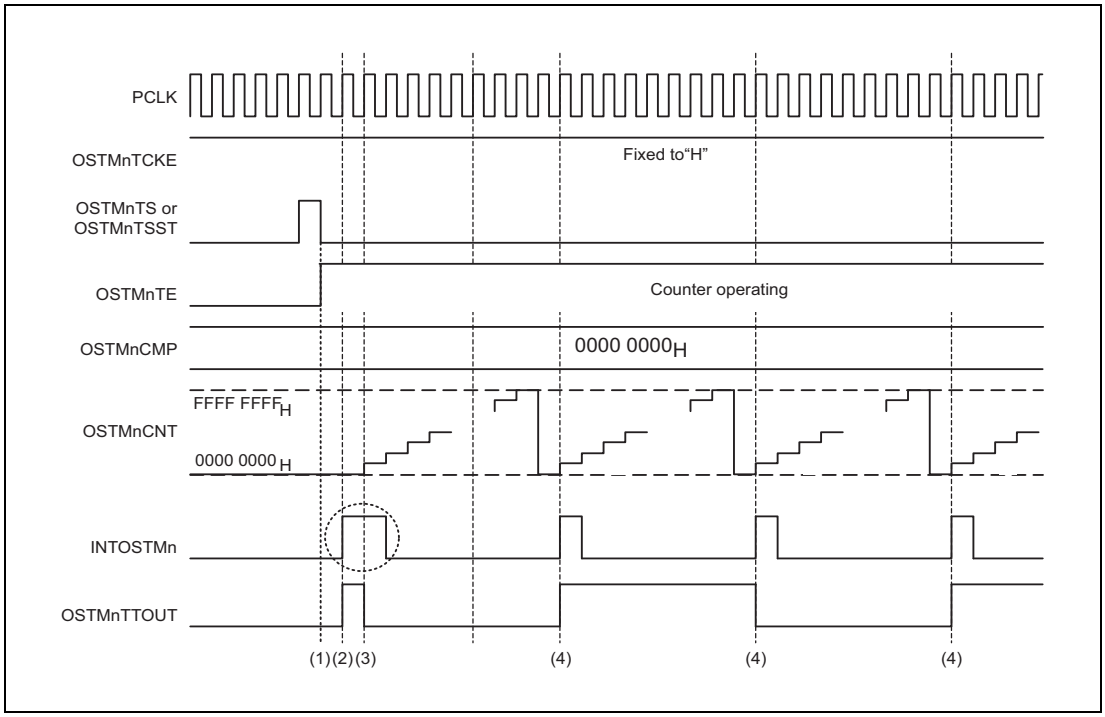

Figure 22.11 Timing Diagram when Counter Clock = PCLK (OSTMnTCKE is at High Level) and OSTMnCMP = 0000 0000_H in Free-Running Comparison Mode

The timing diagram above shows the following operations.

(1) Once the counter starts, it counts up from 0000 0000_H to FFFF $FFFF_H$.

(2) An INTOSTMn interrupt request is generated when counting starts and the OSTMnTTOUT signal is toggled. Though INTOSTMn is at the high level for the period of two cycles of PCLK at the start of counting operations, only a single interrupt request is generated on the rising edge of INTOSTMn.

(3) If the current counter value matches OSTMnCMP, the interrupt request INTOSTMn is generated. If OSTMnCMP = 0000 0000_H in the above case, INTOSTMn is generated over two clock cycles and the OSTMnTTOUT signal is toggled.

(4) For every (FFFF $FFFF_H$ + 1) clock cycles the INTOSTMn interrupt request signal is asserted and the OSTMnTTOUT signal is toggled.

When an interrupt is prohibited when the counter starts, 1 clock cycle of the counter clock is not generated at the start timing of the counter.

22.4.3.3 Setting Procedure for Free-Running Comparison Mode

The setting procedure in free-running compare mode after reset release is described below:

Initialization

(1) Set the comparison value in the OSTMnCMP register.

(2) To output OSTMnTTOUT:
- Initialize the OSTMnTO register in software control mode (OSTMnTOE.OSTMnTOE = 0).
- Select timer output toggle mode (OSTMnTOE.OSTMnTOE = 1).

(3) Select free-running compare mode by setting the OSTMnCTL.OSTMnMD1 bit.

(4) Enable or disable an interrupt when counting is started by the OSTMnCTL.OSTMnMD0 bit.

Section 23 Timer Array Unit D (TAUD)

This section contains a generic description of the Timer Array Unit D (TAUD).

The first part of this section describes all RH850/P1x specific properties, such as the number of units, register base addresses, etc. The remainder of the section describes the functions and registers of the TAUD.

23.1 Features of RH850/P1x TAUD

23.1.1 Units and Channels

This microcontroller has the following number of TAUD units.

Table 23.1 Units

Product	RH850/P1x 100 pins	RH850/P1x 144 pins
Number of Units	3	
Name	TAUDn (n = 0 to 2)	

TAUDn has the following number of channels of timers.

Table 23.2 TAUDn Unit Configurations and Channels

Unit Name (Channel Name) TAUDn	Channels per Unit	RH850/P1x 100 pins (16 ch)	RH850/P1x 144 pins (16 ch)
TAUD0	16	√	√
TAUD1	16	√	√
TAUD2	16	√	√

Table 23.3 Index

Index	Meaning
n	Throughout this section, the individual TAUD units are identified by the index “n” (n = 0 to 2); for example, TAUDnTOM is the TAUDn channel output mode register.
m	The TAUD has 16 channels. Throughout this section, the individual channels are identified by the index “m” (m = 0 to 15), thus a certain channel is denoted as CHm. The even-numbered channels (m = 0, 2, 4, 6, 8, 10, 12, 14) are denoted as CHm_even. The odd-numbered channels (m = 1, 3, 5, 7, 9, 11, 13, 15) are denoted as CHm_odd.

23.1.2 Register Base Address

TAUDn base addresses are listed in the following table.

TAUDn register addresses are given as offsets from the base addresses in general.

Table 23.4 Register Base Address

Base Address Name	Base Address
<TAUD0_base>	FFE2 0000_H
<TAUD1_base>	FFE2 1000_H
<TAUD2_base>	FFE2 2000_H

23.1.3 Clock Supply

Clock supply by and to TAUDn is listed in the following table.

Table 23.5 Clock Supply

Unit Name	Clock for the Unit	Supply Clock Name
TAUDn	PCLK	High-speed peripheral clock CLK_HSB

23.1.4 Interrupt Requests

TAUDn interrupt requests are listed in the following table:

Table 23.6 Interrupt Requests (1/2)

Unit Interrupt Name	Outline	Interrupt Number	DMA/DTS Trigger Number
TAUD0			
INTTAUD0I0	Channel 0 interrupt	141	13
INTTAUD0I1	Channel 1 interrupt	142	14
INTTAUD0I2	Channel 2 interrupt	143	15
INTTAUD0I3	Channel 3 interrupt	144	16
INTTAUD0I4	Channel 4 interrupt	145	17
INTTAUD0I5	Channel 5 interrupt	146	18
INTTAUD0I6	Channel 6 interrupt	147	19
INTTAUD0I7	Channel 7 interrupt	148	20
INTTAUD0I8	Channel 8 interrupt	149	21
INTTAUD0I9	Channel 9 interrupt	150	22
INTTAUD0I10	Channel 10 interrupt	151	23
INTTAUD0I11	Channel 11 interrupt	152	24
INTTAUD0I12	Channel 12 interrupt	153	25
INTTAUD0I13	Channel 13 interrupt	154	26
INTTAUD0I14	Channel 14 interrupt	155	27
INTTAUD0I15	Channel 15 interrupt	156	28
TAUD1			
INTTAUD1I0	Channel 0 interrupt	158	29
INTTAUD1I1	Channel 1 interrupt	159	30
INTTAUD1I2	Channel 2 interrupt	160	31
INTTAUD1I3	Channel 3 interrupt	161	32
INTTAUD1I4	Channel 4 interrupt	162	33
INTTAUD1I5	Channel 5 interrupt	163	34
INTTAUD1I6	Channel 6 interrupt	164	35
INTTAUD1I7	Channel 7 interrupt	165	36
INTTAUD1I8	Channel 8 interrupt	166	37
INTTAUD1I9	Channel 9 interrupt	167	38
INTTAUD1I10	Channel 10 interrupt	168	39
INTTAUD1I11	Channel 11 interrupt	169	40
INTTAUD1I12	Channel 12 interrupt	170	41
INTTAUD1I13	Channel 13 interrupt	171	42

Table 23.6 Interrupt Requests (2/2)

Unit Interrupt Name	Outline	Interrupt Number	DMA/DTS Trigger Number
INTTAUD1I14	Channel 14 interrupt	172	43
INTTAUD1I15	Channel 15 interrupt	173	44
TAUD2			
INTTAUD2I0	Channel 0 interrupt	260	45
INTTAUD2I1	Channel 1 interrupt	261	46
INTTAUD2I2	Channel 2 interrupt	262	47
INTTAUD2I3	Channel 3 interrupt	263	48
INTTAUD2I4	Channel 4 interrupt	264	49
INTTAUD2I5	Channel 5 interrupt	265	50
INTTAUD2I6	Channel 6 interrupt	266	51
INTTAUD2I7	Channel 7 interrupt	267	52
INTTAUD2I8	Channel 8 interrupt	268	53
INTTAUD2I9	Channel 9 interrupt	269	54
INTTAUD2I10	Channel 10 interrupt	270	—
INTTAUD2I11	Channel 11 interrupt	271	—
INTTAUD2I12	Channel 12 interrupt	272	—
INTTAUD2I13	Channel 13 interrupt	273	—
INTTAUD2I14	Channel 14 interrupt	274	—
INTTAUD2I15	Channel 15 interrupt	275	—

23.1.5 Reset Sources

TAUDn reset sources are listed in the following table. TAUDn is initialized by these reset sources.

Table 23.7 Reset Sources

Unit Name	Reset Source
TAUDn	Reset controller SYSRES

23.1.6 External Input/Output Signals

External input/output signals of TAUDn are listed below.

Table 23.8 External Input/Output Signals

Unit Signal Name	Outline	Alternative port pin signal
TAUD0		
TAUDnTTIN0 to TAUDnTTIN15*2	Inputs for channel 0 to 15	TAUD0I0 to TAUD0I15
TAUDnTTOUT0 to TAUDnTTOUT15	Outputs for channel 0 to 15	TAUD0O0 to TAUD0O15
TAUD1		
TAUDnTTIN0 to TAUDnTTIN15*2	Inputs for channel 0 to 15	TAUD1I0 to TAUD1I15
TAUDnTTOUT0 to TAUDnTTOUT15	Outputs for channel 0 to 15	TAUD1O0 to TAUD1O15
TAUD2		
TAUDnTTIN0 to TAUDnTTIN15*2	Inputs for channel 0 to 15	TAUD2I0 to TAUD2I15*1
TAUDnTTOUT0 to TAUDnTTOUT15	Outputs for channel 0 to 15	TAUD2O0 to TAUD2O15

Note 1. The input signals can be switched by PIC. For details, see **Section 29.2.3.11, TAUD Input Select Function**, and **Section 29.2.3.13, Timer Output Monitor Function (PWM-Diag)**.

Note 2. Setting of the noise filter for the port is required when the channel input pin is used. For details, see **Section 2.6, Noise Filter and Edge Level Detection Circuit**.

23.2 Overview

23.2.1 Functional Overview

The TAUD has the following functions:

- 16 channels
- 16-bit counter and 16-bit data register per channel
- Independent channel operation
- Synchronous channel operation (master and slave operation)
- Generation of different types of output signal
- Real-time output
- Counter can be triggered by external signal
- Interrupt generation

The Timer Array Unit D is used to perform various count or timer operations and to output a signal which depends on the result of the operation. It contains one prescaler block for count clock generation and 16 channels, each equipped with a 16 bit counter TAUDnCNTm and a 16-bit data register TAUDnCDRm to hold the start or compare value of the counter.

It also contains several control and status registers.

Independent and synchronous operation

Every channel can operate in different operation modes, either independently or in combination with other channels (synchronously), i.e. multiple channels depend on each other with one master and one or more slave channels.

When a channel is operated independently, its operation mode and functions are not affected by those of other channels. When a channel is operated synchronously it is either a master or a slave. A master channel can have multiple slaves, and the state of one channel affects that of the other channels. For example, this means that one channel can control when another starts to count, is reset, etc.

23.2.2 Terms

In this chapter, the following terms are used:

Independent / synchronous channel operation

Independent or synchronous channel operation describes the dependency of channels on each other:

- If a channel operates independent of all other channels, this is called independent channel operation.
- If a channel operates depending on other channels, this is called synchronous channel operation.

Channel group

In synchronous channel operation, all channels that depend on each other are referred to as a “channel group”.

A channel group has one master channel and one or more slave channels.

Operation mode

An operation mode can be selected for every channel m. The operation mode defines the basic operation and features of a channel.

In synchronous channel operation, every channel in the channel group can operate in a different operation mode.

Examples are “Capture Mode”, “Event Count Mode”, and “Interval Timer Mode”.

Channel output mode

The channel output mode defines the operation of TAUDnTTOUTm

- of a single channel (independent output operation) or
- of all channels in a channel group (synchronous output operation).

Examples are “Independent Channel Output Mode 1” and “Synchronous Channel Output Mode 2 with Dead Time Output”.

Channel operation function

The channel operation function defines the complete function and all features

- of a single channel (independent channel operation) or
- of all channels in a channel group (synchronous channel operation).

Upper / lower channel

Depending on the channel number m, a channel with a smaller number or with a larger number is referred to as “upper” or “lower” channel, respectively.

- Upper channel: Channel with a smaller channel number
- Lower channel: Channel with a larger channel number

Example:

For channel 5, channel 3 is an upper channel and channel 9 is a lower channel.

23.2.3 Functional List of Timer Operations

This timer provides the following functions by operating each channel independently or by combining multiple channels.

Table 23.9 Functional List of TAUD Operations

Function of Independent Operation	Example
Independent Channel Operation Functions	**Section 23.12**
Interval Timer Function	**Section 23.12.1**
TAUDnTTINm Input Interval Timer Function	**Section 23.12.2**
Clock Divider Function	**Section 23.12.3**
External Event Count Function	**Section 23.12.4**
Delay Count Function	**Section 23.12.5**
One-Pulse Output Function	**Section 23.12.6**
TAUDnTTINm Input Pulse Interval Measurement Function	**Section 23.12.7**
TAUDnTTINm Input Signal Width Measurement Function	**Section 23.12.8**
TAUDnTTINm Input Position Detection Function	**Section 23.12.9**
TAUDnTTINm Input Period Count Detection Function	**Section 23.12.10**
TAUDnTTINm Input Pulse Interval Judgment Function	**Section 23.12.11**
TAUDnTTINm Input Signal Width Judgment Function	**Section 23.12.12**
One-Phase PWM Output Function	**Section 23.12.13**
Real Time Output Function Type 1	**Section 23.12.14**
Real-Time Output Function Type 2	**Section 23.12.15**
Simultaneous Rewrite Trigger Generation Function Type 1	**Section 23.12.16**
Synchronous Channel Operation Functions	**Section 23.13**
PWM Output Function	**Section 23.13.1**
One-Shot Pulse Output Function	**Section 23.13.2**
Delay Pulse Output Function	**Section 23.13.3**
Offset Trigger Output Function	**Section 23.13.4**
A/D Conversion Trigger Output Function Type 1	**Section 23.13.5**
Triangle PWM Output Function	**Section 23.13.6**
Triangle PWM Output Function with Dead Time	**Section 23.13.7**
A/D Conversion Trigger Output Function Type 2	**Section 23.13.8**
Interrupt Request Signals Culling Function	**Section 23.13.9**
Synchronous Non-Complementary and Complementary Modulation Output Functions	**Section 23.14**
Non-Complementary Modulation Output Function Type 1	**Section 23.14.1**
Non-Complementary Modulation Output Function Type 2	**Section 23.14.2**
Complementary Modulation Output Function	**Section 23.14.3**

23.2.4 TAUD I/O and Interrupt Request Signals

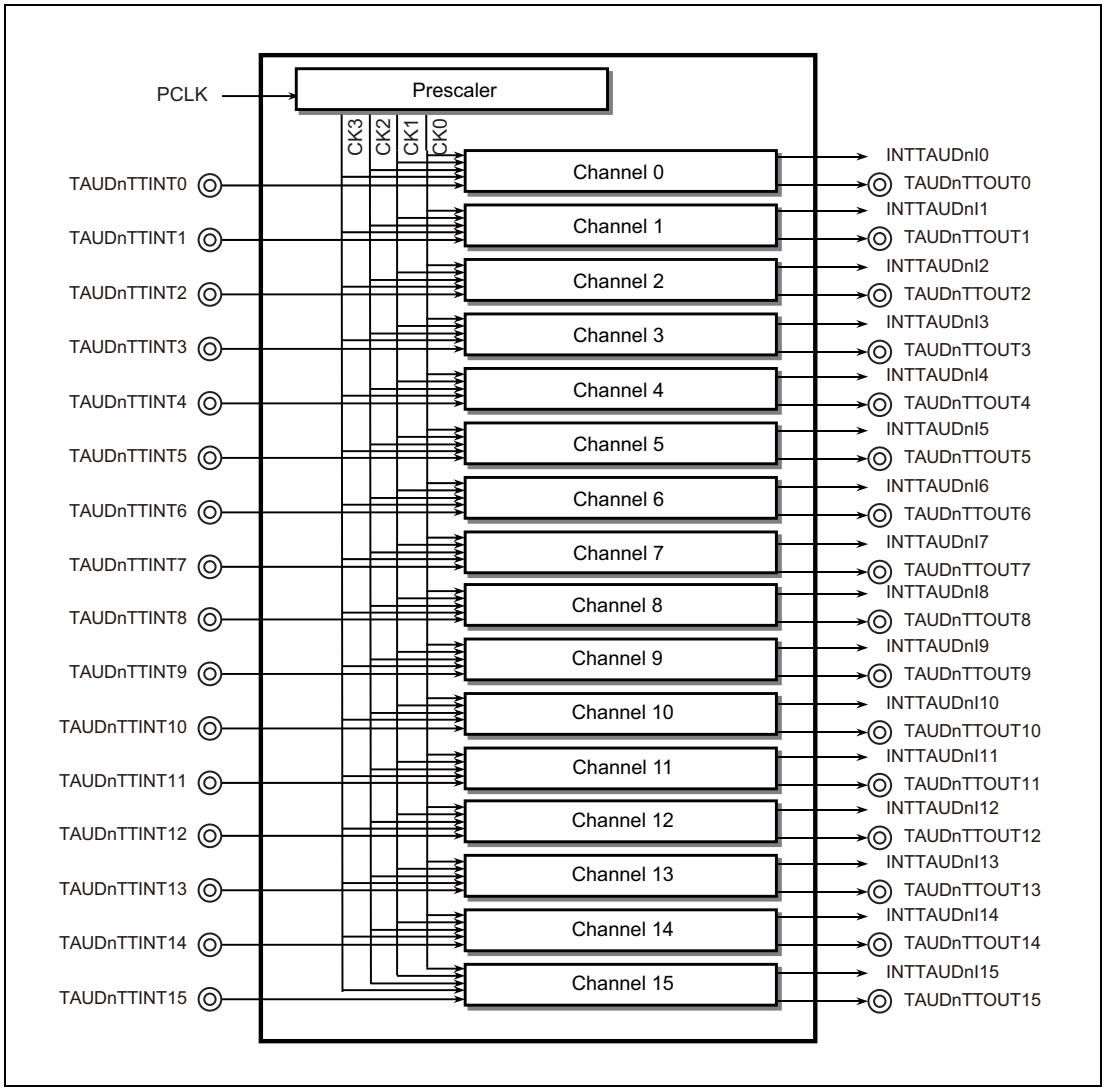

Figure 23.1 TAUD I/O and Interrupt Request Signals

23.2.5 Block Diagram

Figure 23.2 shows the main components of the TAUD:

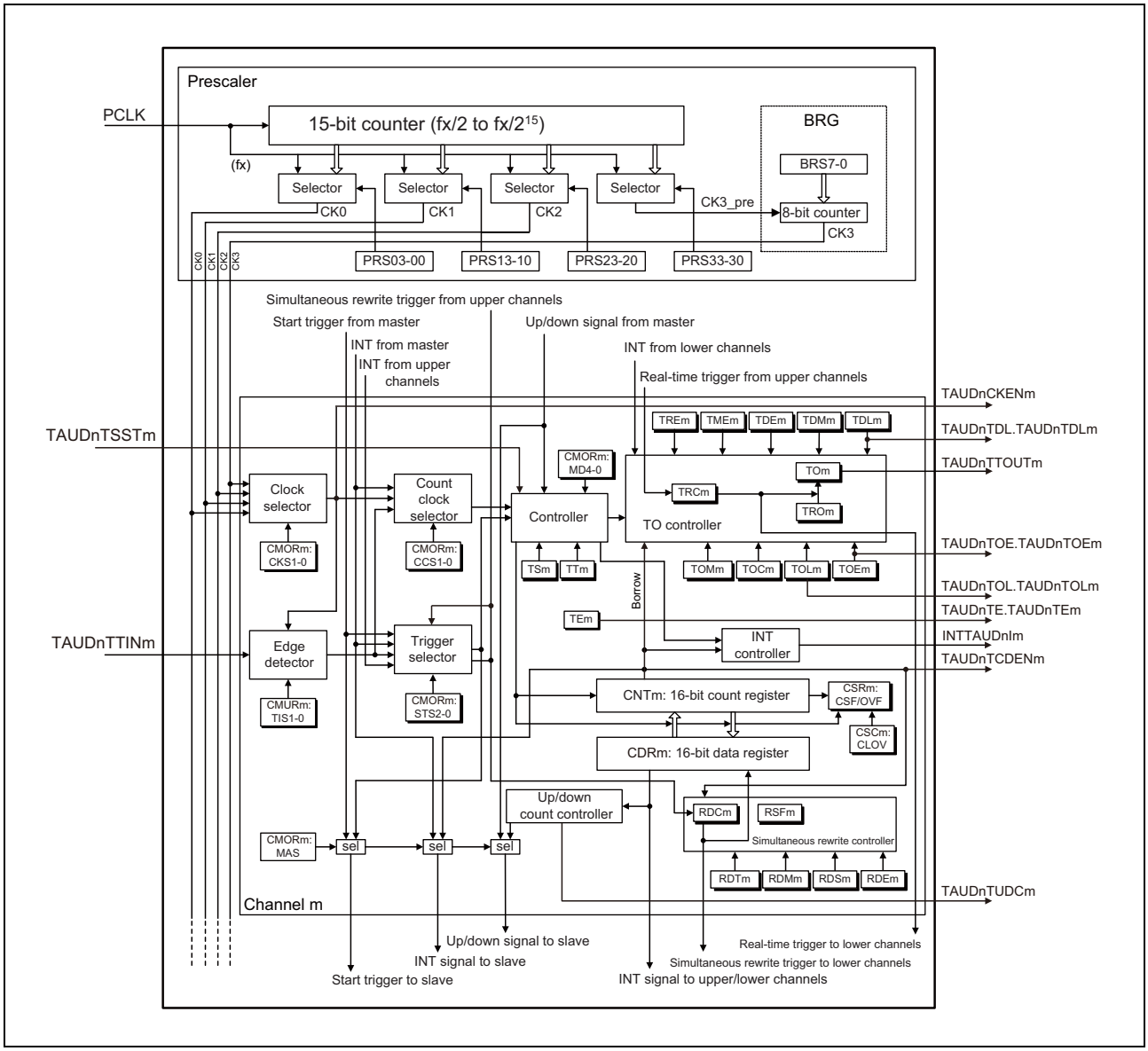

Figure 23.2 Block Diagram of the TAUD

The prefix "TAUDn" has been omitted from the module names for the sake of clarity in the above figure.

23.2.6 Description of Blocks

The following describes the functional blocks:

Prescaler

The prescaler provides up to 4 clock signals (CK0 to CK3) that can be used as count clocks for all channels.

Count clocks CK0 to CK2 are derived from PCLK by configurable prescaler division factors of 2^0 to 2^{15}. The fourth count clock CK3 can be adjusted more precisely by using the BRG to set an additional division factor that is not a power of 2.

Clock and count clock selection

For every channel, the count clock selector selects which of the following is used as the clock source:

- One of the clocks CK0 to CK3 (selected by the clock selector)
- INTTAUDnIm from master channel
- TAUDnTTINm input signal valid edge

Controller

The controller controls the main operations of the counter:

- Operation mode (selected by bits TAUDnCMORm.TAUDnMD[4:0])
- Counter start enable (TAUDnTS.TAUDnTSm) and counter stop (TAUDnTT.TAUDnTTm)

When counter start is enabled, status flag TAUDnTE.TAUDnTEm is set.

- Count direction (up/down) (can be controlled by master channel)

Trigger selector

Depending on the selected operation mode, the counter starts automatically when it is enabled (TAUDnTE.TAUDnTEm = 1), or it waits for an external start trigger signal. Any of the following signals can be used as the start trigger:

- Synchronous channel start trigger input TAUDnTSSTm
- INTTAUDnIm from the master or any upper channel
- Up/down output trigger signal of the master channel
- Dead-time output signal of the TAUDnTTOUTm generation
- TAUDnTTINm input signal valid edge

Simultaneous rewrite controller

Simultaneous rewrite control is a special function that can be used in synchronous operation modes. The data registers (TAUDnCDRm) of all channels in a channel group can be rewritten at any time. The simultaneous rewrite controller ensures that new data register values of all channels become effective at the same time.

TAUDnTO controller

The output control of every channel enables the generation of various output signal forms such as PWM signals or triangular waves.

23.3 Registers

23.3.1 List of Registers

TAUDn registers are listed in the following table.

For details about <TAUDn_base>, see **Section 23.1.2, Register Base Address**.

Table 23.10 Registers

Module	Register	Symbol	Address
TAUDn prescaler registers			
TAUDn	TAUDn prescaler clock select register	TAUDnTPS	<TAUDn_base> + 240_H
TAUDn	TAUDn prescaler baud rate setting register	TAUDnBRS	<TAUDn_base> + 244_H
TAUDn control registers			
TAUDn	TAUDn channel data register m	TAUDnCDRm	<TAUDn_base> + m × 4_H
TAUDn	TAUDn channel counter register m	TAUDnCNTm	<TAUDn_base> + 80_H + m × 4_H
TAUDn	TAUDn channel mode OS register m	TAUDnCMORm	<TAUDn_base> + 200_H + m × 4_H
TAUDn	TAUDn channel mode user register m	TAUDnCMURm	<TAUDn_base> + $C0_H$ + m × 4_H
TAUDn	TAUDn channel status register m	TAUDnCSRm	<TAUDn_base> + 140_H + m × 4_H
TAUDn	TAUDn channel status clear register m	TAUDnCSCm	<TAUDn_base> + 180_H + m × 4_H
TAUDn	TAUDn channel start trigger register	TAUDnTS	<TAUDn_base> + $1C4_H$
TAUDn	TAUDn channel enable status register	TAUDnTE	<TAUDn_base> + $1C0_H$
TAUDn	TAUDn channel stop trigger register	TAUDnTT	<TAUDn_base> + $1C8_H$
TAUDn output registers			
TAUDn	TAUDn channel output enable register	TAUDnTOE	<TAUDn_base> + $5C_H$
TAUDn	TAUDn channel output register	TAUDnTO	<TAUDn_base> + 58_H
TAUDn	TAUDn channel output mode register	TAUDnTOM	<TAUDn_base> + 248_H
TAUDn	TAUDn channel output configuration register	TAUDnTOC	<TAUDn_base> + $24C_H$
TAUDn	TAUDn channel output active level register	TAUDnTOL	<TAUDn_base> + 040_H
TAUDn	TAUDn channel dead time output enable register	TAUDnTDE	<TAUDn_base> + 250_H
TAUDn	TAUDn channel dead time output mode register	TAUDnTDM	<TAUDn_base> + 254_H
TAUDn	TAUDn channel dead time output level register	TAUDnTDL	<TAUDn_base> + 54_H
TAUDn	TAUDn channel real-time output register	TAUDnTRO	<TAUDn_base> + $4C_H$
TAUDn	TAUDn channel real-time output enable register	TAUDnTRE	<TAUDn_base> + 258_H
TAUDn	TAUDn channel real-time output control register	TAUDnTRC	<TAUDn_base> + $25C_H$
TAUDn	TAUDn channel modulation output enable register	TAUDnTME	<TAUDn_base> + 50_H
TAUDn reload data registers			
TAUDn	TAUDn channel reload data enable register	TAUDnRDE	<TAUDn_base> + 260_H
TAUDn	TAUDn channel reload data mode register	TAUDnRDM	<TAUDn_base> + 264_H
TAUDn	TAUDn channel reload data control CH select register	TAUDnRDS	<TAUDn_base> + 268_H
TAUDn	TAUDn channel reload data control register	TAUDnRDC	<TAUDn_base> + $26C_H$
TAUDn	TAUDn channel reload data trigger register	TAUDnRDT	<TAUDn_base> + 44_H
TAUDn	TAUDn channel reload status register	TAUDnRSF	<TAUDn_base> + 48_H

23.3.2 Details of TAUDn Prescaler Registers

23.3.2.1 TAUDnTPS — TAUDn Prescaler Clock Select Register

This register specifies clocks CK0, CK1, CK2, and CK3_PRE for all channels of the PCLK prescaler. CK3 is generated by dividing CK3_PRE by the factor specified in TAUDnBRS.

Access: Readable/writable in 16-bit units. Write to this register when TAUDnTE.TAUDnTEm = 0.

Address: <TAUDn_base> + 240_H

Value after reset: $FFFF_H$ This register is initialized by any reset source.

Bit	15	14	13	12	11	10	9	8	7	6	5	4	3	2	1	0
	TAUDnPRS3[3:0]				TAUDnPRS2[3:0]				TAUDnPRS1[3:0]				TAUDnPRS0[3:0]			
Value after reset	1	1	1	1	1	1	1	1	1	1	1	1	1	1	1	1
R/W	R/W	R/W	R/W	R/W	R/W	R/W	R/W	R/W	R/W	R/W	R/W	R/W	R/W	R/W	R/W	R/W

Table 23.11 TAUDnTPS Register Contents (1/3)

Bit Position	Bit Name	Function
15 to 12	TAUDnPRS3 [3:0]	Specify the CK3_PRE clock. CK3_PRE clock is an input clock to BRG unit which supplies the CK3 operating clock to all channels. **TAUDnPRS3[3:0]** — **CK3_PRE Clock** 0000_B — $PCLK/2^0$ 0001_B — $PCLK/2^1$ 0010_B — $PCLK/2^2$ 0011_B — $PCLK/2^3$ 0100_B — $PCLK/2^4$ 0101_B — $PCLK/2^5$ 0110_B — $PCLK/2^6$ 0111_B — $PCLK/2^7$ 1000_B — $PCLK/2^8$ 1001_B — $PCLK/2^9$ 1010_B — $PCLK/2^{10}$ 1011_B — $PCLK/2^{11}$ 1100_B — $PCLK/2^{12}$ 1101_B — $PCLK/2^{13}$ 1110_B — $PCLK/2^{14}$ 1111_B — $PCLK/2^{15}$ The above bits are rewritable only when all the counters using CK3 are stopped (TAUDnTE.TAUDnTEm = 0).

Table 23.11 TAUDnTPS Register Contents (2/3)

Bit Position	Bit Name	Function
11 to 8	TAUDnPRS2 [3:0]	Specify the CK2 clock. **TAUDnPRS2[3:0]** / **CK2 Clock** 0000_B / $PCLK/2^0$ 0001_B / $PCLK/2^1$ 0010_B / $PCLK/2^2$ 0011_B / $PCLK/2^3$ 0100_B / $PCLK/2^4$ 0101_B / $PCLK/2^5$ 0110_B / $PCLK/2^6$ 0111_B / $PCLK/2^7$ 1000_B / $PCLK/2^8$ 1001_B / $PCLK/2^9$ 1010_B / $PCLK/2^{10}$ 1011_B / $PCLK/2^{11}$ 1100_B / $PCLK/2^{12}$ 1101_B / $PCLK/2^{13}$ 1110_B / $PCLK/2^{14}$ 1111_B / $PCLK/2^{15}$ The above bits are rewritable only when all the counters using CK2 are stopped (TAUDnTE.TAUDnTEm = 0).
7 to 4	TAUDnPRS1 [3:0]	Specify the CK1 clock. **TAUDnPRS1[3:0]** / **CK1 Clock** 0000_B / $PCLK/2^0$ 0001_B / $PCLK/2^1$ 0010_B / $PCLK/2^2$ 0011_B / $PCLK/2^3$ 0100_B / $PCLK/2^4$ 0101_B / $PCLK/2^5$ 0110_B / $PCLK/2^6$ 0111_B / $PCLK/2^7$ 1000_B / $PCLK/2^8$ 1001_B / $PCLK/2^9$ 1010_B / $PCLK/2^{10}$ 1011_B / $PCLK/2^{11}$ 1100_B / $PCLK/2^{12}$ 1101_B / $PCLK/2^{13}$ 1110_B / $PCLK/2^{14}$ 1111_B / $PCLK/2^{15}$ The above bits are rewritable only when all the counters using CK1 are stopped (TAUDnTE.TAUDnTEm = 0).

Table 23.11 TAUDnTPS Register Contents (3/3)

Bit Position	Bit Name	Function
3 to 0	TAUDnPRS0 [3:0]	Specify the CK0 clock.

TAUDnPRS0[3:0]	CK0 Clock
0000_B	$PCLK/2^0$
0001_B	$PCLK/2^1$
0010_B	$PCLK/2^2$
0011_B	$PCLK/2^3$
0100_B	$PCLK/2^4$
0101_B	$PCLK/2^5$
0110_B	$PCLK/2^6$
0111_B	$PCLK/2^7$
1000_B	$PCLK/2^8$
1001_B	$PCLK/2^9$
1010_B	$PCLK/2^{10}$
1011_B	$PCLK/2^{11}$
1100_B	$PCLK/2^{12}$
1101_B	$PCLK/2^{13}$
1110_B	$PCLK/2^{14}$
1111_B	$PCLK/2^{15}$

The above bits are rewritable only when all the counters using CK0 are stopped (TAUDnTE.TAUDnTEm = 0).

NOTE

The TAUDn clock input PCLK is specified in the first part of this section, **Section 23.1.3, Clock Supply**.

23.3.2.2 TAUDnBRS — TAUDn Prescaler Baud Rate Setting Register

This register specifies the division factor of prescaler clock CK3.

CK3 is generated by dividing CK3_PRE by the factor specified in this register plus one. The PCLK prescaler for CK3_PRE is specified in TAUDnTPS.TAUDnPRS3[3:0].

Access: Readable/writable in 8-bit units. Write to this register when TAUDnTE.TAUDnTEm = 0.

Address: <TAUDn_base> + 244_H

Value after reset: 00_H This register is initialized by any reset source.

Bit	7	6	5	4	3	2	1	0
	TAUDnBRS[7:0]							
Value after reset	0	0	0	0	0	0	0	0
R/W	R/W	R/W	R/W	R/W	R/W	R/W	R/W	R/W

Table 23.12 TAUDnBRS Register Contents

Bit Position	Bit Name	Function
7 to 0	TAUDnBRS[7:0]	Specify a CK3_PRE clock division factor for generating CK3.

TAUDnBRS[7:0]	CK3 Clock
$0000\ 0000_B$	CK3_PRE / 1
$0000\ 0001_B$	CK3_PRE / 2
$0000\ 0010_B$	CK3_PRE / 3
$0000\ 0011_B$	CK3_PRE / 4
...	...
$1111\ 1110_B$	CK3_PRE / 255
$1111\ 1111_B$	CK3_PRE / 256

23.3.3 Details of TAUDn Control Registers

23.3.3.1 TAUDnCDRm — TAUDn Channel Data Register

This register functions either as a compare register or as a capture register, depending on the operating mode specified in TAUDnCMORm.TAUDnMD[4:1].

Access: Readable/writable in 16-bit units.
When this register functions as a capture register, only reading is possible. Any write operation is ignored.
When this register functions as a compare register, reading and writing is possible.

Address: <TAUDn_base> + m × 4_H

Value after reset: 0000_H This register is initialized by any reset source.

Bit	15	14	13	12	11	10	9	8	7	6	5	4	3	2	1	0
	TAUDnCDR[15:0]															
Value after reset	0	0	0	0	0	0	0	0	0	0	0	0	0	0	0	0
R/W	R/W	R/W	R/W	R/W	R/W	R/W	R/W	R/W	R/W	R/W	R/W	R/W	R/W	R/W	R/W	R/W

Table 23.13 TAUDnCDRm Register Contents

Bit Position	Bit Name	Function
15 to 0	TAUDnCDR [15:0]	Data register for capture/compare values

23.3.3.2 TAUDnCNTm — TAUDn Channel Counter Register

This is a channel m counter register.

Access: Readable in 16-bit units.

Address: <TAUDn_base> + 80_H + m × 4_H

Value after reset: $FFFF_H$

Bit	15	14	13	12	11	10	9	8	7	6	5	4	3	2	1	0
	TAUDnCNT[15:0]															
Value after reset	1	1	1	1	1	1	1	1	1	1	1	1	1	1	1	1
R/W	R	R	R	R	R	R	R	R	R	R	R	R	R	R	R	R

Table 23.14 TAUDnCNTm Register Contents

Bit Position	Bit Name	Function
15 to 0	TAUDnCNT [15:0]	16-bit counter value

A read value depends on a counter value, a changed operating mode, TAUDnTS.TAUDnTSm or TAUDnTT.TAUDnTTm bit value.

The initial read value of the counter depends on an operating mode and how the counter is stopped.

- Stop by a reset
- Stop by a counter stop trigger (TAUDnTT.TAUDnTTm = 1)

Table 23.15 lists the initial counter read values after the counter is stopped (TAUDnTE.TAUDnTEm = 0) and re-enabled (TAUDnTS.TAUDnTSm = 1).

The table also contains the counter read value one count after the counter is enabled (TAUDnTS.TAUDnTSm = 1) with the counter waiting for a start trigger.

Table 23.15 TAUDnCNTm Read Values after Re-Enabling Counter

Mode Name	Count Method (Up/Down)	TAUDnCNTm Value		
		Start value*1	After Stop Trigger	After One Count
Interval timer mode	Count down	$FFFF_H$	Stop value	—
Judge mode	Count down	$FFFF_H$	Stop value	—
Capture mode	Count up	0000_H	Stop value	—
Event count mode	Count down	$FFFF_H$	Stop value	—
One-count mode	Count down	$FFFF_H$	Stop value	Stop value
Capture and one-count mode	Count up	0000_H	Stop value	Capture value + 1 (TAUDnCDRm)
Judge and one-count mode	Count down	$FFFF_H$	Stop value	TAUDnCNTm value – 1
Up/down count mode	Count down/up	$FFFF_H$	Stop value	—
Pulse one count mode	Count down	$FFFF_H$	Stop value	0000_H
Count capture mode	Count up	0000_H	Stop value	—
Capture and gate count mode	Count up	0000_H	Stop value	Stop value

Note 1. The value set in TAUDnCNTm when operation mode is changes after reset release.

23.3.3.3 TAUDnCMORm — TAUDn Channel Mode OS Register

This register controls channel m operation.

Access: Readable/writable in 16-bit units. Write to this register when TAUDnTE.TAUDnTEm = 0.

Address: <TAUDn_base> + 200_H + m × 4_H

Value after reset: 0000_H This register is initialized by any reset source.

Bit	15	14	13	12	11	10	9	8	7	6	5	4	3	2	1	0
	TAUDnCKS [1:0]		TAUDnCCS [1:0]		TAUDn MAS	TAUDnSTS[2:0]			TAUDnCOS [1:0]		—	TAUDnMD[4:0]				
Value after reset	0	0	0	0	0	0	0	0	0	0	0	0	0	0	0	0
R/W	R/W	R/W	R/W	R/W	R/W	R/W	R/W	R/W	R/W	R/W	R	R/W	R/W	R/W	R/W	R/W

Table 23.16 TAUDnCMORm Register Contents (1/3)

Bit Position	Bit Name	Function
15, 14	TAUDnCKS[1:0]	Selects an operating clock. The operating clock is used for the following two operations. • Used for the TAUDnTTINm input edge detection circuit. • Used as a counter clock as TAUDnCNTm by the TAUDnCMORm.TAUDnCCS[1:0] bit setting. **TAUDn CKS1 / TAUDn CKS0 / Selection of Operating Clock** 0 / 0 / CK0 0 / 1 / CK1 1 / 0 / CK2 1 / 1 / CK3
13, 12	TAUDnCCS[1:0]	Selects a count clock for TAUDnCNTm counter. **TAUDn CCS1 / TAUDn CCS0 / Selection of Count Clock** 0 / 0 / Operating clock specified by TAUDnCMORm.TAUDnCKS[1:0] 0 / 1 / Valid edge of TAUDnTTINm input signal 1 / 0 / Setting prohibited 1 / 1 / INTTAUDnIm signal of master channel
11	TAUDnMAS	Specifies whether the channel is a master channel or slave channel during synchronous channel operation. 0: Slave 1: Master This bit setting is valid only for even-numbered channels (CHm_even). Odd-numbered channels (CHm_odd) are fixed to 0.

Table 23.16 TAUDnCMORm Register Contents (2/3)

Bit Position	Bit Name	Function
10 to 8	TAUDnSTS[2:0]	Selects an external start trigger.

TAUDn STS2	TAUDn STS1	TAUDn STS0	Functional description
0	0	0	Software trigger
0	0	1	Valid edge of TAUDnTTINm input signal, which is specified by TAUDnCMURm.TAUDnTIS[1:0].
0	1	0	Valid edge of TAUDnTTINm input signal is used as a start trigger and the opposite edge as a stop trigger.
0	1	1	Triggers simultaneous rewrite.
1	0	0	INT of master channel
1	0	1	INT of upper channel (m - 1) regardless of master setting
1	1	0	Dead time output signal of the TO controller at the TAUDnTTOUTm output
1	1	1	Up/down output trigger signal of master channel

Bit Position	Bit Name	Function
7, 6	TAUDnCOS[1:0]	Specify the timing for updating capture register TAUDnCDRm and overflow flag TAUDnCSRm.TAUDnOVF of channel m. These bits are valid only when channel m is in capture modes (capture and capture & one-count). • Capture mode • Capture and one-count mode • Capture and gate count mode • Count capture mode

TAUDn COS1	TAUDn COS0	TAUDnCDRm	TAUDnCSRm.TAUDnOVF
0	0	Updated upon detection of valid edge of TAUDnTTINm input.	Updated (cleared or set) by detecting valid edge of TAUDnTTINm input: • If a counter overflow has occurred since the last detection of valid edge, set TAUDnCSRm.TAUDnOVF. • If no counter overflow has occurred since the last detection of valid edge, clear TAUDnCSRm.TAUDnOVF.
0	1		Set when a counter overflow occurs, and cleared when TAUDnCSCm.TAUDnCLOV is set to 1.
1	0	Updated upon detection of valid edge of TAUDnTTINm input and at the occurrence of counter overflow: • Detection of valid edge of TAUDnTTINm input: Counter value is written into TAUDnCDRm. • Occurrence of overflow: $FFFF_H$ is loaded into TAUDnCDRm. The next detection of valid of TAUDnTTINm input is ignored.	Not operating
1	1		Set when a counter overflow occurs, and cleared when TAUDnCSCm.TAUDnCLOV is set to 1.

Bit Position	Bit Name	Function
5	Reserved	When read, the value after reset is read. When writing, write the value after reset.

Table 23.16 TAUDnCMORm Register Contents (3/3)

Bit Position	Bit Name	Function
4 to 0	TAUDnMD[4:0]	Specify an operating mode.

TAUDn MD4	TAUDn MD3	TAUDn MD2	TAUDn MD1	TAUDn MD0	Functional Description
0	0	0	0	1/0	Interval timer mode
0	0	0	1	1/0	Judge mode
0	0	1	0	1/0	Capture mode
0	0	1	1	0	Event count mode
0	1	0	0	1/0	One-count mode
0	1	0	1	1/0	Setting prohibited
0	1	1	0	0	Capture and one-count mode
0	1	1	1	1/0	Judge and one-count mode
1	0	0	0	0	Setting prohibited
1	0	0	1	0	Up/down count mode
1	0	1	0	1/0	Pulse one-count mode
1	0	1	1	1/0	Count capture mode
1	1	0	0	0	Setting prohibited
1	1	0	1	0	Capture and gate count mode

Mode	Role of TAUDnMD0 Bit
Interval timer mode Capture mode Count capture mode	Specifies whether INTTAUDnIm is generated at the beginning of count operation (when a start trigger is entered) or not. 0: INTTAUDnIm is not generated. 1: INTTAUDnIm is generated.
Event count mode Up/down count mode	This bit should be set to 0. 0: INTTAUDnIm generation prohibited
One-count mode Pulse one-count mode	Enables/disables start trigger detection during counting. 0: Disables detection. 1: Enables detection. **CAUTION** • In one-count mode, INTTAUDnIm signal is not output at the beginning of count operation. • In pulse one-count mode, INTTAUDnIm signal is output at the beginning of count operation.
Capture and one-count mode Capture and gate count mode	This bit should be set to 0. **CAUTION** INTTAUDnIm signal is not output at the beginning of count operation. In addition, start trigger detected during counting is disabled.
Judge mode Judge and one-count mode	Specifies INTTAUDnIm output timing. 0: When TAUDnCNTm ≤ TAUDnCDRm 1: When TAUDnCNTm > TAUDnCDRm

23.3.3.4 TAUDnCMURm — TAUDn Channel Mode User Register

This register specifies a type of valid edge detection used for TAUDnTTINm input.

Access: Readable/writable in 8-bit units.

Address: <TAUDn_base> + $C0_H$ + m × 4_H

Value after reset: 00_H This register is initialized by any reset source.

Bit	7	6	5	4	3	2	1	0
	—	—	—	—	—	—	TAUDnTIS[1:0]	
Value after reset	0	0	0	0	0	0	0	0
R/W	R	R	R	R	R	R	R/W	R/W

Table 23.17 TAUDnCMURm Register Contents

Bit position	Bit name	Function
7 to 2	Reserved	When read, the value after reset is read. When writing, write the value after reset.
1, 0	TAUDnTIS[1:0]	Specify a valid edge of TAUDnTTINm input signal.

TAUDn TIS1	TAUDn TIS0	Functional Description
0	0	Falling edge
0	1	Rising edge
1	0	Detection of rising and falling edges (selects low width measurement) • Start trigger: Falling edge • Stop trigger (capture): Rising edge
1	1	Detection of rising and falling edges (selects high width measurement) • Start trigger: Rising edge • Stop trigger (capture): Falling edge

Edge detection of TAUDnTTINm input signal is based on the operating clock selected by TAUDnCMORm.TAUDnCKS[1:0].

23.3.3.5 TAUDnCSRm — TAUDn channel status register

This register indicates the up/down count and overflow status of channel m counter.

Access: Readable in 8-bit units.

Address: <TAUDn_base> + 140_H + m × 4_H

Value after reset: 00_H This register is initialized by any reset source.

Bit	7	6	5	4	3	2	1	0
	—	—	—	—	—	—	TAUDnCSF	TAUDnOVF
Value after reset	0	0	0	0	0	0	0	0
R/W	R	R	R	R	R	R	R	R

Table 23.18 TAUDnCSRm Register Contents

Bit position	Bit name	Function
7 to 2	Reserved	When read, the value after reset is read. When writing, write the value after reset.
1	TAUDnCSF	Indicates a count direction. 0: Count-up 1: Count-down The read value of this bit is valid only in up/down count mode. In other modes, an undefined value is read.
0	TAUDnOVF	Indicates counter overflow status. 0: No overflow occurs. 1: Overflow occurs. This bit is used only in the following modes: • Capture mode • Capture and one-count mode The function of this bit depends on the setting of control bit TAUDnCMORm.TAUDnCOS[1:0]. In other modes, an undefined value is read.

23.3.3.6 TAUDnCSCm - TAUDn Channel Status Clear Register

This is a trigger register for clearing the overflow flag TAUDnCSRm.TAUDnOVF of channel m.

Access: Writable in 8-bit units. This value is always read as 00_H.

Address: <TAUDn_base> + 180_H + m × 4_H

Value after reset: 00_H This register is initialized by any reset source.

Bit	7	6	5	4	3	2	1	0
	—	—	—	—	—	—	—	TAUDnCLOV
Value after reset	0	0	0	0	0	0	0	0
R/W	R	R	R	R	R	R	R	W

Table 23.19 TAUDnCSCm Register Contents

Bit position	Bit name	Function
7 to 1	Reserved	When read, the value after reset is read. When writing, write the value after reset.
0	TAUDnCLOV	This bit clears the overflow flag of channel m. Writing 1 to this bit clears the overflow flag TAUDnCSRm.TAUDnOVF, though writing 0 is ignored.

23.3.3.7 TAUDnTS — TAUDn Channel Start Trigger Register

This register enables the counter operation of each channel.

Access: Writable in 16-bit units. This value is always read as 0000_H.

Address: <TAUDn_base> + $1C4_H$

Value after reset: 0000_H This register is initialized by any reset source.

Bit	15	14	13	12	11	10	9	8	7	6	5	4	3	2	1	0
	TAUDnTS15	TAUDnTS14	TAUDnTS13	TAUDnTS12	TAUDnTS11	TAUDnTS10	TAUDnTS09	TAUDnTS08	TAUDnTS07	TAUDnTS06	TAUDnTS05	TAUDnTS04	TAUDnTS03	TAUDnTS02	TAUDnTS01	TAUDnTS00
Value after reset	0	0	0	0	0	0	0	0	0	0	0	0	0	0	0	0
R/W	W	W	W	W	W	W	W	W	W	W	W	W	W	W	W	W

Table 23.20 TAUDnTS Register Contents

Bit position	Bit name	Function
15 to 0	TAUDnTSm	Enables the counter operation of channel m. Writing 1 to this bit enables the counter operation and sets TAUDnTE.TAUDnTEm to 1, though writing 0 is ignored.

23.3.3.8 TAUDnTE — TAUDn Channel Enable Status Register

This register indicates the enable/disable state of the counter operation.

Access: Readable in 16-bit units.

Address: <TAUDn_base> + $1C0_H$

Value after reset: 0000_H This register is initialized by any reset source.

Bit	15	14	13	12	11	10	9	8	7	6	5	4	3	2	1	0
	TAUDnTE15	TAUDnTE14	TAUDnTE13	TAUDnTE12	TAUDnTE11	TAUDnTE10	TAUDnTE09	TAUDnTE08	TAUDnTE07	TAUDnTE06	TAUDnTE05	TAUDnTE04	TAUDnTE03	TAUDnTE02	TAUDnTE01	TAUDnTE00
Value after reset	0	0	0	0	0	0	0	0	0	0	0	0	0	0	0	0
R/W	R	R	R	R	R	R	R	R	R	R	R	R	R	R	R	R

Table 23.21 TAUDnTE Register Contents

Bit position	Bit name	Function
15 to 0	TAUDnTEm	Indicates the enable/disable state of the counter operation of channel m. 0: The counter operation is disabled. 1: The counter operation is enabled. This bit is set to 1 when trigger input of TAUDnTSSTm (synchronous channel start trigger signal) is detected or when TAUDnTS.TAUDnTSm is set to 1. This bit is set to 0 when TAUDnTT.TAUDnTTm is set to 1.

23.3.3.9 TAUDnTT — TAUDn Channel Stop Trigger Register

This register stops the counter operation of each channel.

Access: Writable in 16-bit units. This value is always read as 0000_H.

Address: <TAUDn_base> + $1C8_H$

Value after reset: 0000_H This register is initialized by any reset source.

Bit	15	14	13	12	11	10	9	8	7	6	5	4	3	2	1	0
	TAUDnTT15	TAUDnTT14	TAUDnTT13	TAUDnTT12	TAUDnTT11	TAUDnTT10	TAUDnTT09	TAUDnTT08	TAUDnTT07	TAUDnTT06	TAUDnTT05	TAUDnTT04	TAUDnTT03	TAUDnTT02	TAUDnTT01	TAUDnTT00
Value after reset	0	0	0	0	0	0	0	0	0	0	0	0	0	0	0	0
R/W	W	W	W	W	W	W	W	W	W	W	W	W	W	W	W	W

Table 23.22 TAUDnTT Register Contents

Bit position	Bit name	Function
15 to 0	TAUDnTTm	Stops the counter operation of channel m. Writing 1 to this bit stops the counter operation and clears TAUDnTE.TAUDnTEm to 0, though writing 0 is ignored. TAUDnCNTm, TAUDnTO.TAUDnTOm, and TAUDnTTOUTm retain the values provided before the counter is stopped.

23.3.4 Details of TAUDn Simultaneous Rewrite Registers

23.3.4.1 TAUDnRDE — TAUDn Channel Reload Data Enable Register

This register enables/disables simultaneous rewrite of TAUDnCDRm/TAUDnTOLm data register.

Access: Readable/writable in 16-bit units. Writable only while TAUDnTE.TAUDnTEm = 0.

Address: <TAUDn_base> + 260_H

Value after reset: 0000_H This register is initialized by any reset source.

Bit	15	14	13	12	11	10	9	8	7	6	5	4	3	2	1	0
	TAUDn RDE15	TAUDn RDE14	TAUDn RDE13	TAUDn RDE12	TAUDn RDE11	TAUDn RDE10	TAUDn RDE09	TAUDn RDE08	TAUDn RDE07	TAUDn RDE06	TAUDn RDE05	TAUDn RDE04	TAUDn RDE03	TAUDn RDE02	TAUDn RDE01	TAUDn RDE00
Value after reset	0	0	0	0	0	0	0	0	0	0	0	0	0	0	0	0
R/W	R/W	R/W	R/W	R/W	R/W	R/W	R/W	R/W	R/W	R/W	R/W	R/W	R/W	R/W	R/W	R/W

Table 23.23 TAUDnRDE Register Contents

Bit position	Bit name	Function
15 to 0	TAUDnRDEm	Enables/disables simultaneous rewrite of the data register of channel m. 0: Disables simultaneous rewrite (Loaded by the detection of its own channel match) 1: Enables simultaneous rewrite

23.3.4.2 TAUDnRDS — TAUDn Channel Reload Data Control Channel Select Register

This register selects a channel that controls simultaneous rewrite.

Access: Readable/writable in 16-bit units. Writable only while TAUDnTE.TAUDnTEm = 0.

Address: <TAUDn_base> + 268_H

Value after reset: 0000_H This register is initialized by any reset source.

Bit	15	14	13	12	11	10	9	8	7	6	5	4	3	2	1	0
	TAUDn RDS15	TAUDn RDS14	TAUDn RDS13	TAUDn RDS12	TAUDn RDS11	TAUDn RDS10	TAUDn RDS09	TAUDn RDS08	TAUDn RDS07	TAUDn RDS06	TAUDn RDS05	TAUDn RDS04	TAUDn RDS03	TAUDn RDS02	TAUDn RDS01	TAUDn RDS00
Value after reset	0	0	0	0	0	0	0	0	0	0	0	0	0	0	0	0
R/W	R/W	R/W	R/W	R/W	R/W	R/W	R/W	R/W	R/W	R/W	R/W	R/W	R/W	R/W	R/W	R/W

Table 23.24 TAUDnRDS Register Contents

Bit position	Bit name	Function
15 to 0	TAUDnRDSm	Selects a channel that controls a simultaneous rewrite trigger. 0: Master channel 1: Another upper channel (The channel when TAUDnRDE.TAUDnRDEm = 1)

23.3.4.3 TAUDnRDM — TAUDn Channel Reload Data Mode Register

This register selects the timing for generating a simultaneous rewrite control signal.

Access: Readable/writable in 16-bit units. Writable only while TAUDnTE.TAUDnTEm = 0.

Address: <TAUDn_base> + 264_H

Value after reset: 0000_H This register is initialized by any reset source.

Bit	15	14	13	12	11	10	9	8	7	6	5	4	3	2	1	0
	TAUDnRDM15	TAUDnRDM14	TAUDnRDM13	TAUDnRDM12	TAUDnRDM11	TAUDnRDM10	TAUDnRDM09	TAUDnRDM08	TAUDnRDM07	TAUDnRDM06	TAUDnRDM05	TAUDnRDM04	TAUDnRDM03	TAUDnRDM02	TAUDnRDM01	TAUDnRDM00
Value after reset	0	0	0	0	0	0	0	0	0	0	0	0	0	0	0	0
R/W	R/W	R/W	R/W	R/W	R/W	R/W	R/W	R/W	R/W	R/W	R/W	R/W	R/W	R/W	R/W	R/W

Table 23.25 TAUDnRDM Register Contents

Bit position	Bit name	Function
15 to 0	TAUDnRDMm	Selects the timing for generating a simultaneous rewrite trigger signal. 0: When the master channel counter starts to count 1: At the peak of cycle of triangular wave These bit settings are applied only when TAUDnRDE.TAUDnRDEm = 1 and TAUDnRDS.TAUDnRDSm = 0.

23.3.4.4 TAUDnRDC — TAUDn Channel Reload Data Control Register

This register specifies a channel which generates an INTTAUDnIm signal to trigger simultaneous rewrite.

Access: Readable/writable in 16-bit units. Writable only while TAUDnTE.TAUDnTEm = 0.

Address: <TAUDn_base> + $26C_H$

Value after reset: 0000_H This register is initialized by any reset source.

Bit	15	14	13	12	11	10	9	8	7	6	5	4	3	2	1	0
	TAUDnRDC15	TAUDnRDC14	TAUDnRDC13	TAUDnRDC12	TAUDnRDC11	TAUDnRDC10	TAUDnRDC09	TAUDnRDC08	TAUDnRDC07	TAUDnRDC06	TAUDnRDC05	TAUDnRDC04	TAUDnRDC03	TAUDnRDC02	TAUDnRDC01	TAUDnRDC00
Value after reset	0	0	0	0	0	0	0	0	0	0	0	0	0	0	0	0
R/W	R/W	R/W	R/W	R/W	R/W	R/W	R/W	R/W	R/W	R/W	R/W	R/W	R/W	R/W	R/W	R/W

Table 23.26 TAUDnRDC Register Contents

Bit position	Bit name	Function
15 to 0	TAUDnRDCm	Specify whether the channel generates a simultaneous rewrite trigger signal or not. 0: Not operate as a simultaneous rewrite trigger channel. 1: Operates as a simultaneous rewrite trigger channel. These bit settings are applied only when TAUDnRDE.TAUDnRDEm = 1 and TAUDnRDS.TAUDnRDSm = 1.

23.3.4.5 TAUDnRDT — TAUDn Channel Reload Data Trigger Register

This register triggers the enabling state of simultaneous rewrite.

Access: Writable in 16-bit units. This value is always read as 0000_H.

Address: <TAUDn_base> + 044_H

Value after reset: 0000_H This register is initialized by any reset source.

Bit	15	14	13	12	11	10	9	8	7	6	5	4	3	2	1	0
	TAUDn RDT15	TAUDn RDT14	TAUDn RDT13	TAUDn RDT12	TAUDn RDT11	TAUDn RDT10	TAUDn RDT09	TAUDn RDT08	TAUDn RDT07	TAUDn RDT06	TAUDn RDT05	TAUDn RDT04	TAUDn RDT03	TAUDn RDT02	TAUDn RDT01	TAUDn RDT00
Value after reset	0	0	0	0	0	0	0	0	0	0	0	0	0	0	0	0
R/W	W	W	W	W	W	W	W	W	W	W	W	W	W	W	W	W

Table 23.27 TAUDnRDT Register Contents

Bit position	Bit name	Function
15 to 0	TAUDnRDTm	These bits specify the trigger to the enabling state of simultaneous rewrite. 0: No function 1: The simultaneous rewrite enabling flag (TAUDnRSFm) is set to 1. The system waits for the simultaneous rewrite trigger. The setting of these bits is applied only when TAUJnRDE.TAUJnRDEm is 1.

23.3.4.6 TAUDnRSF — TAUDn Channel Reload Status Register

This flag register indicates simultaneous rewrite status.

Access: Readable in 16-bit units.

Address: <TAUDn_base> + 048_H

Value after reset: 0000_H This register is initialized by any reset source.

Bit	15	14	13	12	11	10	9	8	7	6	5	4	3	2	1	0
	TAUDn RSF15	TAUDn RSF14	TAUDn RSF13	TAUDn RSF12	TAUDn RSF11	TAUDn RSF10	TAUDn RSF09	TAUDn RSF08	TAUDn RSF07	TAUDn RSF06	TAUDn RSF05	TAUDn RSF04	TAUDn RSF03	TAUDn RSF02	TAUDn RSF01	TAUDn RSF00
Value after reset	0	0	0	0	0	0	0	0	0	0	0	0	0	0	0	0
R/W	R	R	R	R	R	R	R	R	R	R	R	R	R	R	R	R

Table 23.28 TAUDnRSF Register Contents

Bit position	Bit name	Function
15 to 0	TAUDnRSFm	Indicates simultaneous rewrite status. 0: Indicates that a simultaneous rewrite has completed by the generation of a simultaneous rewrite trigger. 1: Indicates that a simultaneous rewrite trigger is waited in a simultaneous rewrite enable state (TAUDnRDTm = 1).

23.3.5 Details of TAUDn Output Registers

23.3.5.1 TAUDnTOE — TAUDn Channel Output Enable Register

This register enables/disables the independent channel output mode controlled by software.

Access: Readable/writable in 16-bit units.

Address: <TAUDn_base> + $5C_H$

Value after reset: 0000_H This register is initialized by any reset source.

Bit	15	14	13	12	11	10	9	8	7	6	5	4	3	2	1	0
	TAUDnTOE15	TAUDnTOE14	TAUDnTOE13	TAUDnTOE12	TAUDnTOE11	TAUDnTOE10	TAUDnTOE09	TAUDnTOE08	TAUDnTOE07	TAUDnTOE06	TAUDnTOE05	TAUDnTOE04	TAUDnTOE03	TAUDnTOE02	TAUDnTOE01	TAUDnTOE00
Value after reset	0	0	0	0	0	0	0	0	0	0	0	0	0	0	0	0
R/W	R/W	R/W	R/W	R/W	R/W	R/W	R/W	R/W	R/W	R/W	R/W	R/W	R/W	R/W	R/W	R/W

Table 23.29 TAUDnTOE Register Contents

Bit position	Bit name	Function
15 to 0	TAUDnTOEm	Enables or disables the independent channel output mode. 0: Disables the independent timer output function (software control) 1: Enables the independent timer output function.

23.3.5.2 TAUDnTO — TAUDn Channel Output Register

This register specifies and reads a TAUDnTTOUTm level.

Access: Readable/writable in 16-bit units.

Address: <TAUDn_base> + 58_H

Value after reset: 0000_H This register is initialized by any reset source.

Bit	15	14	13	12	11	10	9	8	7	6	5	4	3	2	1	0
	TAUDnTO15	TAUDnTO14	TAUDnTO13	TAUDnTO12	TAUDnTO11	TAUDnTO10	TAUDnTO09	TAUDnTO08	TAUDnTO07	TAUDnTO06	TAUDnTO05	TAUDnTO04	TAUDnTO03	TAUDnTO02	TAUDnTO01	TAUDnTO00
Value after reset	0	0	0	0	0	0	0	0	0	0	0	0	0	0	0	0
R/W	R/W	R/W	R/W	R/W	R/W	R/W	R/W	R/W	R/W	R/W	R/W	R/W	R/W	R/W	R/W	R/W

Table 23.30 TAUDnTO Register Contents

Bit position	Bit name	Function
15 to 0	TAUDnTOm	Specify and reads a TAUDnTTOUTm level. 0: Low level 1: High level Writing to these bits is enabled only when TAUDnTOE.TAUDnTOEm is 0.

23.3.5.3 TAUDnTOM — TAUDn Channel Output Mode Register

This register specifies the output mode of each channel.

Access: Readable/writable in 16-bit units. Writable only while the counter is stopped (TAUDnTE.TAUDnTEm = 0).

Address: <TAUDn_base> + 248_H

Value after reset: 0000_H This register is initialized by any reset source.

Bit	15	14	13	12	11	10	9	8	7	6	5	4	3	2	1	0
	TAUDnTOM15	TAUDnTOM14	TAUDnTOM13	TAUDnTOM12	TAUDnTOM11	TAUDnTOM10	TAUDnTOM09	TAUDnTOM08	TAUDnTOM07	TAUDnTOM06	TAUDnTOM05	TAUDnTOM04	TAUDnTOM03	TAUDnTOM02	TAUDnTOM01	TAUDnTOM00
Value after reset	0	0	0	0	0	0	0	0	0	0	0	0	0	0	0	0
R/W	R/W	R/W	R/W	R/W	R/W	R/W	R/W	R/W	R/W	R/W	R/W	R/W	R/W	R/W	R/W	R/W

Table 23.31 TAUDnTOM Register Contents

Bit position	Bit name	Function
15 to 0	TAUDnTOMm	Specify an output mode. 0: Independent channel operation 1: Synchronous channel operation

23.3.5.4 TAUDnTOC — TAUDn Channel Output Configuration Register

This register specifies the output mode of each channel in combination with TAUDnTOM.TAUDnTOMm.

Access: Readable/writable in 16-bit units. Writable only while the counter is stopped (TAUDnTE.TAUDnTEm = 0).

Address: <TAUDn_base> + $24C_H$

Value after reset: 0000_H This register is initialized by any reset source.

Bit	15	14	13	12	11	10	9	8	7	6	5	4	3	2	1	0
	TAUDnTOC15	TAUDnTOC14	TAUDnTOC13	TAUDnTOC12	TAUDnTOC11	TAUDnTOC10	TAUDnTOC09	TAUDnTOC08	TAUDnTOC07	TAUDnTOC06	TAUDnTOC05	TAUDnTOC04	TAUDnTOC03	TAUDnTOC02	TAUDnTOC01	TAUDnTOC00
Value after reset	0	0	0	0	0	0	0	0	0	0	0	0	0	0	0	0
R/W	R/W	R/W	R/W	R/W	R/W	R/W	R/W	R/W	R/W	R/W	R/W	R/W	R/W	R/W	R/W	R/W

Table 23.32 TAUDnTOC Register Contents

Bit position	Bit name	Function
15 to 0	TAUDnTOCm	Specify an output mode. 0: Operating mode 1 1: Operating mode 2 These bits specify the operating mode of TAUDnTTOUTm by the setting of TAUDnTOM.TAUDnTOMm and TAUDnTOC.TAUDnTOCm.

TOMm	TOCm	Functional Description
0	0	Toggle mode: Toggle operation is conducted when INTTAUDnIm occurs.
0	1	Set/reset mode: Set when INTTAUDnIm occurs at the beginning of count operation, and reset when INTTAUDnIm is caused by detection of a match between TAUDnCNTm and TAUDnCDRm.
1	0	Synchronous channel operating mode 1: Set when INT occurs on master channels, and reset when INT occurs on slave channels.
1	1	Synchronous channel operating mode 2: • Set when INTTAUDnIm occurs in count-down status. • Reset when INTTAUDnIm occurs in count-up status.

23.3.5.5 TAUDnTOL — TAUDn Channel Output Active Level Register

This register specifies the output logic of channel output bit (TAUDnTO.TAUDnTOm).

Access: Readable/writable in 16-bit units.

Address: <TAUDn_base> + 040_H

Value after reset: 0000_H This register is initialized by any reset source.

Bit	15	14	13	12	11	10	9	8	7	6	5	4	3	2	1	0
	TAUDnTOL15	TAUDnTOL14	TAUDnTOL13	TAUDnTOL12	TAUDnTOL11	TAUDnTOL10	TAUDnTOL09	TAUDnTOL08	TAUDnTOL07	TAUDnTOL06	TAUDnTOL05	TAUDnTOL04	TAUDnTOL03	TAUDnTOL02	TAUDnTOL01	TAUDnTOL00
Value after reset	0	0	0	0	0	0	0	0	0	0	0	0	0	0	0	0
R/W	R/W	R/W	R/W	R/W	R/W	R/W	R/W	R/W	R/W	R/W	R/W	R/W	R/W	R/W	R/W	R/W

Table 23.33 TAUDnTOL Register Contents

Bit position	Bit name	Function
15 to 0	TAUDnTOLm	Specify the output logic of channel m output bit (TAUDnTO.TAUDnTOm). 0: Positive logic (active high) 1: Negative logic (active low) The value of these bits are enabled when the combination of following three conditions is enabled and TAUDnTOE.TAUDnTOEm = 1. • TAUDnTOM.TAUDnTOMm = 0, TAUDnTOC.TAUDnTOCm = 1 • TAUDnTOM.TAUDnTOMm = 1, TAUDnTOC.TAUDnTOCm = 1 • TAUDnTOM.TAUDnTOMm = 1, TAUDnTOC.TAUDnTOCm = 0

23.3.6 Details of TAUDn Dead Time Output Registers

23.3.6.1 TAUDnTDE — TAUDn Channel Dead Time Output Enable Register

This register enables/disables the dead time operation of every channel.

Access: Readable/writable in 16-bit units. Writable only while the counter is stopped (TAUDnTE.TAUDnTEm = 0).

Address: <TAUDn_base> + 250_H

Value after reset: 0000_H This register is initialized by any reset source.

Bit	15	14	13	12	11	10	9	8	7	6	5	4	3	2	1	0
	TAUDnTDE15	TAUDnTDE14	TAUDnTDE13	TAUDnTDE12	TAUDnTDE11	TAUDnTDE10	TAUDnTDE09	TAUDnTDE08	TAUDnTDE07	TAUDnTDE06	TAUDnTDE05	TAUDnTDE04	TAUDnTDE03	TAUDnTDE02	TAUDnTDE01	TAUDnTDE00
Value after reset	0	0	0	0	0	0	0	0	0	0	0	0	0	0	0	0
R/W	R/W	R/W	R/W	R/W	R/W	R/W	R/W	R/W	R/W	R/W	R/W	R/W	R/W	R/W	R/W	R/W

Table 23.34 TAUDnTDE Register Contents

Bit position	Bit name	Function
15 to 0	TAUDnTDEm	Enables/disables the dead time control operation of channel m. 0: Disables dead time operation 1: Enables dead time operation. The same setting should be made for both even- and odd-numbered slave channels in pairs. These bit settings are applied when: • TAUDnTOE.TAUDnTOEm = 1, TAUDnTOM.TAUDnTOMm = 1, TAUDnTOC.TAUDnTOCm = 1

23.3.6.2 TAUDnTDM — TAUDn Channel Dead Time Output Mode Register

This register specifies the timing to add dead time during dead time output.

Access: Readable/writable in 16-bit units. Writable only while the counter is stopped (TAUDnTE.TAUDnTEm = 0).

Address: <TAUDn_base> + 254_H

Value after reset: 0000_H This register is initialized by any reset source.

Bit	15	14	13	12	11	10	9	8	7	6	5	4	3	2	1	0
	TAUDnTDM15	TAUDnTDM14	TAUDnTDM13	TAUDnTDM12	TAUDnTDM11	TAUDnTDM10	TAUDnTDM09	TAUDnTDM08	TAUDnTDM07	TAUDnTDM06	TAUDnTDM05	TAUDnTDM04	TAUDnTDM03	TAUDnTDM02	TAUDnTDM01	TAUDnTDM00
Value after reset	0	0	0	0	0	0	0	0	0	0	0	0	0	0	0	0
R/W	R/W	R/W	R/W	R/W	R/W	R/W	R/W	R/W	R/W	R/W	R/W	R/W	R/W	R/W	R/W	R/W

Table 23.35 TAUDnTDM Register Contents

Bit position	Bit name	Function
15 to 0	TAUDnTDMm	Specify the timing to add dead time during dead time output. 0: When detecting the duty cycle of an upper even-numbered channel (duty dead time output). 1: When detecting the TAUDnTTINm input edge of a lower odd-numbered channel (one-phase dead time output). The same setting should be made for both even- and odd-numbered slave channels in pairs. These bit settings are applied when: • TAUDnTOE.TAUDnTOEm = 1, TAUDnTOM.TAUDnTOMm = 1, TAUDnTOC.TAUDnTOCm = 1, TAUDnTDE.TAUDnTDEm = 1

23.3.6.3 TAUDnTDL — TAUDn Channel Dead Time Output Level Register

This register selects a phase in which dead time is added.

Access: Readable/writable in 16-bit units.

Address: <TAUDn_base> + 54_H

Value after reset: 0000_H This register is initialized by any reset source.

Bit	15	14	13	12	11	10	9	8	7	6	5	4	3	2	1	0
	TAUDnTDL15	TAUDnTDL14	TAUDnTDL13	TAUDnTDL12	TAUDnTDL11	TAUDnTDL10	TAUDnTDL09	TAUDnTDL08	TAUDnTDL07	TAUDnTDL06	TAUDnTDL05	TAUDnTDL04	TAUDnTDL03	TAUDnTDL02	TAUDnTDL01	TAUDnTDL00
Value after reset	0	0	0	0	0	0	0	0	0	0	0	0	0	0	0	0
R/W	R/W	R/W	R/W	R/W	R/W	R/W	R/W	R/W	R/W	R/W	R/W	R/W	R/W	R/W	R/W	R/W

Table 23.36 TAUDnTDL Register Contents

Bit position	Bit name	Function
15 to 0	TAUDnTDLm	Selects a phase in which dead time is added. 0: Normal phase 1: Reverse phase These bit settings are applied when: • TAUDnTOE.TAUDnTOEm = 1, TAUDnTOM.TAUDnTOMm = 1, TAUDnTOC.TAUDnTOCm = 1, TAUDnTDE.TAUDnTDEm = 1

23.3.7 Details of TAUDn Real-time/Modulation Output Registers

23.3.7.1 TAUDnTRE — TAUDn Channel Real-time Output Enable Register

This register enables/disables real-time output.

Access: Readable/writable in 16-bit units. Writable only while TAUDnTE.TAUDnTEm = 0.

Address: <TAUDn_base> + 258_H

Value after reset: 0000_H This register is initialized by any reset source.

Bit	15	14	13	12	11	10	9	8	7	6	5	4	3	2	1	0
	TAUDnTRE15	TAUDnTRE14	TAUDnTRE13	TAUDnTRE12	TAUDnTRE11	TAUDnTRE10	TAUDnTRE09	TAUDnTRE08	TAUDnTRE07	TAUDnTRE06	TAUDnTRE05	TAUDnTRE04	TAUDnTRE03	TAUDnTRE02	TAUDnTRE01	TAUDnTRE00
Value after reset	0	0	0	0	0	0	0	0	0	0	0	0	0	0	0	0
R/W	R/W	R/W	R/W	R/W	R/W	R/W	R/W	R/W	R/W	R/W	R/W	R/W	R/W	R/W	R/W	R/W

Table 23.37 TAUDnTRE Register Contents

Bit position	Bit name	Function
15 to 0	TAUDnTREm	Enables or disables real-time output of channel m. 0: Disables real-time output 1: Enables real-time output. These bit settings are applied only when TAUDnTOE.TAUDnTOEm = 1. When TAUDnTRE.TAUDnTREm = 0, TAUDnTTOUTm is not affected by real-time output. When TAUDnTRE.TAUDnTREm = 1, TAUDnTTOUTm outputs the value of real-time output bit TAUDnTRO.TAUDnTROm in response to a timer operation.

23.3.7.2 TAUDnTRC — TAUDn Channel Real-time Output Control Register

This register controls the real-time output trigger of each channel.

Access: Readable/writable in 16-bit units. Writable only while TAUDnTE.TAUDnTEm = 0.

Address: <TAUDn_base> + $25C_H$

Value after reset: 0000_H This register is initialized by any reset source.

Bit	15	14	13	12	11	10	9	8	7	6	5	4	3	2	1	0
	TAUDnTRC15	TAUDnTRC14	TAUDnTRC13	TAUDnTRC12	TAUDnTRC11	TAUDnTRC10	TAUDnTRC09	TAUDnTRC08	TAUDnTRC07	TAUDnTRC06	TAUDnTRC05	TAUDnTRC04	TAUDnTRC03	TAUDnTRC02	TAUDnTRC01	TAUDnTRC00
Value after reset	0	0	0	0	0	0	0	0	0	0	0	0	0	0	0	0
R/W	R/W	R/W	R/W	R/W	R/W	R/W	R/W	R/W	R/W	R/W	R/W	R/W	R/W	R/W	R/W	R/W

Table 23.38 TAUDnTRC Register Contents

Bit position	Bit name	Function
15 to 0	TAUDnTRCm	Specify a channel on which the real-time output trigger for channel m is generated. 0: Next upper channel with this bit set to 1 1: Channel m These bit settings are applied only when TAUDnTRE.TAUDnTREm = 1.

23.3.7.3 TAUDnTRO — TAUDn Channel Real-time Output Register

This register sets a value which is output to TAUDnTTOUTm.

Access: Readable/writable in 16-bit units.

Address: <TAUDn_base> + $04C_H$

Value after reset: 0000_H This register is initialized by any reset source.

Bit	15	14	13	12	11	10	9	8	7	6	5	4	3	2	1	0
	TAUDnTRO15	TAUDnTRO14	TAUDnTRO13	TAUDnTRO12	TAUDnTRO11	TAUDnTRO10	TAUDnTRO09	TAUDnTRO08	TAUDnTRO07	TAUDnTRO06	TAUDnTRO05	TAUDnTRO04	TAUDnTRO03	TAUDnTRO02	TAUDnTRO01	TAUDnTRO00
Value after reset	0	0	0	0	0	0	0	0	0	0	0	0	0	0	0	0
R/W	R/W	R/W	R/W	R/W	R/W	R/W	R/W	R/W	R/W	R/W	R/W	R/W	R/W	R/W	R/W	R/W

Table 23.39 TAUDnTRO Register Contents

Bit position	Bit name	Function
15 to 0	TAUDnTROm	Sets a value which is output to TAUDnTTOUTm. 0: Low 1: High TAUDnTROm value is not output to TAUDnTTOUTm when TAUDnTRE.TAUDnTREm = 0, even if a real-time output trigger occurs.

23.3.7.4 TAUDnTME — TAUDn Channel Modulation Output Enable Register

This register enables/disables modulation output for timer output and real-time output.

Access: Readable/writable in 16-bit units.

Address: <TAUDn_base> + 050_H

Value after reset: 0000_H This register is initialized by any reset source.

Bit	15	14	13	12	11	10	9	8	7	6	5	4	3	2	1	0
	TAUDnTME15	TAUDnTME14	TAUDnTME13	TAUDnTME12	TAUDnTME11	TAUDnTME10	TAUDnTME09	TAUDnTME08	TAUDnTME07	TAUDnTME06	TAUDnTME05	TAUDnTME04	TAUDnTME03	TAUDnTME02	TAUDnTME01	TAUDnTME00
Value after reset	0	0	0	0	0	0	0	0	0	0	0	0	0	0	0	0
R/W	R/W	R/W	R/W	R/W	R/W	R/W	R/W	R/W	R/W	R/W	R/W	R/W	R/W	R/W	R/W	R/W

Table 23.40 TAUDnTME Register Contents

Bit position	Bit name	Function
15 to 0	TAUDnTMEm	Enables/disables modulation output for timer output and real-time output of channel m. 0: Disables modulation 1: Enables modulation These bit settings are applied only when TAUDnTOE.TAUDnTOEm and TAUDnTRE.TAUDnTREm = 1.

23.4 Operating Procedure

The following lists the general operation procedure for the TAUDn:

After reset release, the operation of each channel is stopped. Clock supply is started and writing to each register is enabled. All circuits and registers of all channels are initialized. The control register of TAUDnTTOUTm is also initialized and outputs a low level.

(1) Set the TAUDnTPS and TAUDnBRS registers to specify the clock frequency of CK0 to CK3.

(2) Configure the desired TAUDn function:
- Set the operation mode
- Set the channel output mode
- Set any other control bits

(3) Enable the counter by setting the TAUDnTS.TAUDnTSm bit to 1.
The counter starts to count immediately, or when an appropriate trigger is detected, depending on the bit settings.

(4) If desired, and if possible for the configured function, stop the counter or perform a forced restart operation during count operation. The counter can be stopped by setting the TAUDnTT.TAUDnTTm bit to 1. The counter can be forcibly restarted by setting the TAUDnTS.TAUDnTSm bit to 1.

(5) Stop the function by setting the TAUDnTT.TAUDnTTm bit to 1.

NOTES

1. A detailed description of the required control bits and the operation of the individual functions is given below:
   - **Section 23.12, Independent Channel Operation Functions**
   - **Section 23.13, Synchronous Channel Operation Functions**
2. Change function while count operation is stopped (TAUDnTE.TAUDnTEm = 0).

23.5 Concepts of Synchronous Channel Operation

The synchronous channel operation function is implemented using a combination of channel groups (consisted of master and slave channels). Several rules apply to the settings of channels. These rules are detailed in **Section 23.5.1, Rules of Synchronous Channel Operation**.

Two special features for synchronous channel operation are detailed in the following subchapters:

- **Section 23.5.2, Simultaneous Start and Stop of Synchronous Channel Counters**
- **Section 23.6, Simultaneous Rewrite**

23.5.1 Rules of Synchronous Channel Operation

Number of masters and slaves

- Only even-numbered channels (CH0, CH2, CH4, …) can be set as master channels. Any channel apart from CH0 can be set as a slave channel.
- Only channels lower than the master channel can be set as slave channels, and several slave channels can be set for one master channel.
  Example: If CH2 is a master channel, CH3 and the lower channels (CH4, CH5, …) can be set as slave channels.
- If multiple master channels are used, slave channels cannot cross the master channels.
  Example: If CH0 and CH4 are master channels, CH1 to CH3 can be set as slave channels for CH0, but CH5 to CH15 cannot.

Operating clock

- The same operating clock must be set for the slave channel and the master channel. This is achieved using the TAUDnCMORm.TAUDnCKS[1:0] bits of the slave and master channel.

The basic concepts of master/slave usage and operating clocks are illustrated in **Figure 23.3**.

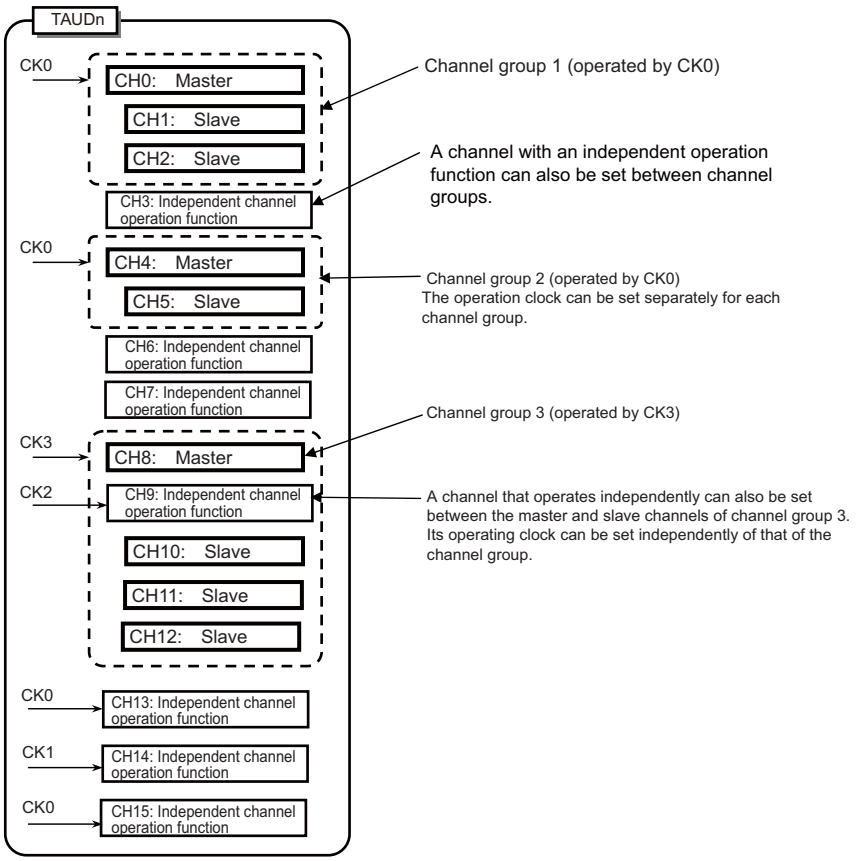

Figure 23.3 Grouping of Channels and Assignment of Operating Clocks

Control trigger signal for master/salve channels

- Master channels can output control trigger signals to slave channels.
- Slave channels can use control trigger signals from master channels but cannot output control trigger signals for their own to lower channels.
- Master channels cannot use control trigger signals from upper master channels.

23.5.2 Simultaneous Start and Stop of Synchronous Channel Counters

Channels that are operated synchronously can be started and stopped simultaneously within the same unit and between the units.

23.5.2.1 Simultaneous Start and Stop within the Same Unit

- To simultaneously start synchronized channels, the TAUDnTS.TAUDnTSm bits of the channels should be set at the same time.
- To simultaneously stop synchronized channels, the TAUDnTT.TAUDnTTm bits of the channels should be set at the same time.

Setting to the TAUDnTS.TAUDnTSm bits to 1 also sets the corresponding TAUDnTE.TAUDnTEm bits to 1, enabling counting. The count start timing depends on operating mode.

23.5.2.2 Simultaneous Start between the Units

Counters in different units can also be started simultaneously if the corresponding counters are enabled before receiving the simultaneous trigger signal.

For details on simultaneous start between the units and other timer functions, **Section 29, Peripheral Interconnection (PIC)**, **29.2.3.1, Simultaneous Start Trigger Function**.

23.6 Simultaneous Rewrite

23.6.1 Overview of Operations

Simultaneous rewrite describes the ability to change the compare/start value and the output logic of multiple channels at the same time.

The corresponding data and control registers (TAUDnCDRm and TAUDnTOLm) can nevertheless be written at any time. The new value does not affect the counter operation or the output signal until simultaneous rewrite is triggered.

Simultaneous rewrite can be triggered by:

- The counter on the master channel or upper channel (depending on the selected operation mode) reaching a certain value
- INTTAUDnIm being issued on the upper channel specified by TAUDnRDC.TAUDnRDCm

There are four methods for simultaneous rewrite. These are listed in **Table 23.41**, along with how to specify them and when they cause simultaneous rewrite to be triggered.

Table 23.41 Simultaneous Rewrite Methods and when They are Triggered

Method	Simultaneous Rewrite Triggered when	TAUDnRDE. TAUDnRDEm	TAUDnRDS. TAUDnRDSm	TAUDnRDM. TAUDnRDMm
—	No simultaneous rewrite	0	0	0
A	The master channel (re)starts counting	1	0	0
B	The master channel starts counting down at the peaks of the triangular waves in the corresponding slave channel.	1	0	1
C1	INTTAUDnIm is generated on an upper channel specified by TAUDnRDC.TAUDnRDCm	1	1	0/1
C2	INTTAUDnIm is generated on an upper channel specified by TAUDnRDC.TAUDnRDCm that in turn is triggered by an external signal	1	1	0/1

Table 23.42 lists which of these four methods is available for each channel operation function. For more information about the individual channel operation functions, see the corresponding sections in **Section 23.12, Independent Channel Operation Functions** and **Section 23.13, Synchronous Channel Operation Functions**.

Table 23.42 Channel Operation Functions and Methods They Use

Function	A	B	C1	C2	TAUDnTOL. TAUDnTOLm
Simultaneous Rewrite Trigger Output Function Type 1			X		
PWM Output Function	X		X		X
One-Shot Pulse Output Function	X				
Trigger Start PWM Output Function	X			X	
Delay Pulse Output Function	X				
Triangle PWM Output Function		X	X		X
Triangle PWM Output Function with Dead Time		X	X		
Interrupt Request Signals Culling Function	X	X	X		
AD Conversion Trigger Output Function Type 1	X		X		
AD Conversion Trigger Output Function Type 2		X	X		
Non-Complementary Modulation Output Function Type 1	X		X		
Non-Complementary Modulation Output Function Type 2		X	X		
Complementary Modulation Output Function		X	X		

Note: X: Available, (Blank): Unavailable

23.6.2 How to Control Simultaneous Rewrite

Figure 23.4 shows the general procedure for simultaneous rewrite. The three main blocks (initial settings, start and counter count operation, and simultaneous rewrite) are explained afterwards.

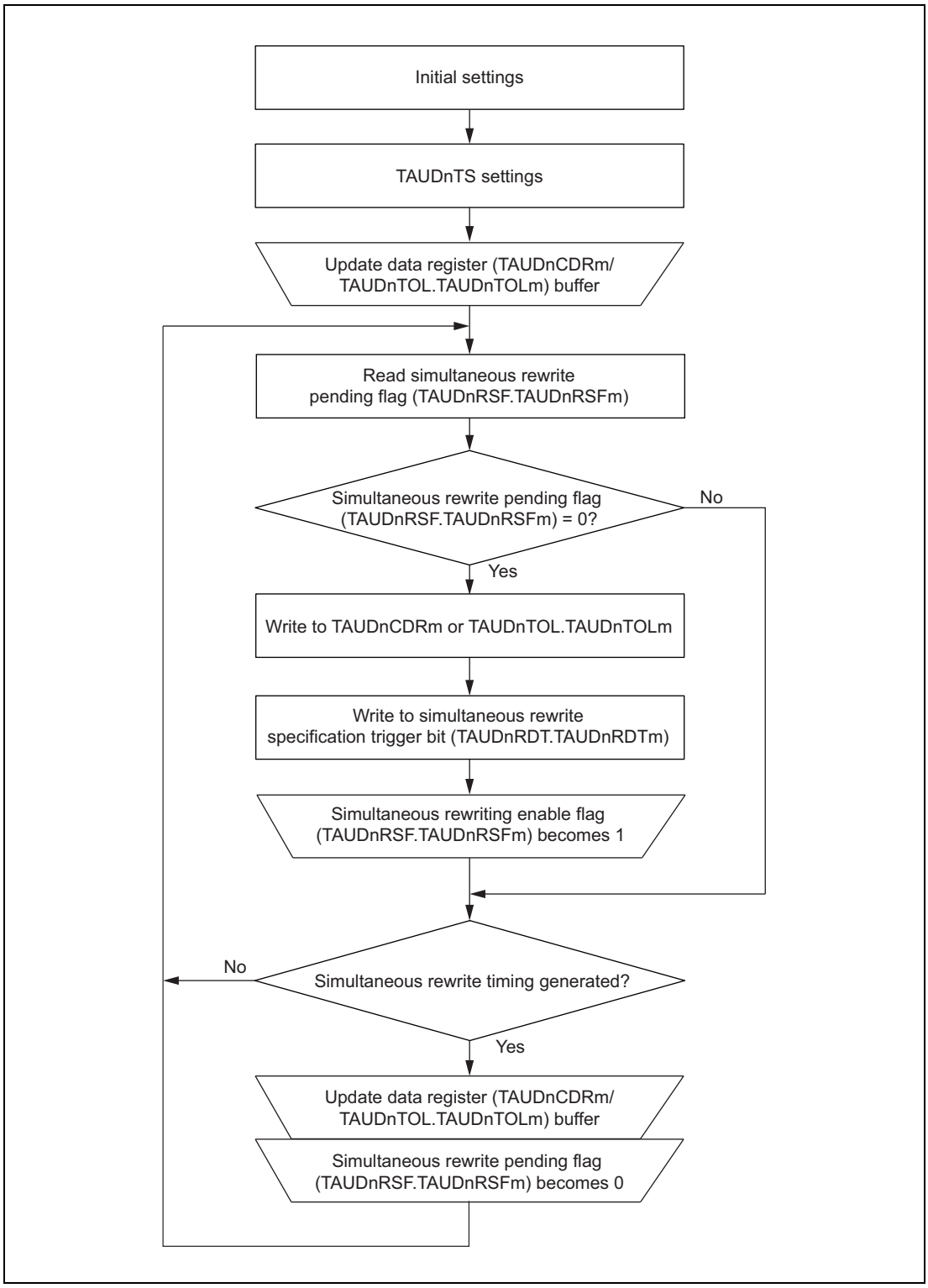

Figure 23.4 General Procedure for Simultaneous Rewrite

23.6.2.1 Initial Settings

- To enable simultaneous rewrite in channel m, set TAUDnRDE.TAUDnRDEm = 1
- To select the type of simultaneous rewrite, set TAUDnRDM.TAUDnRDMm and TAUDnRDS.TAUDnRDSm according to the values listed in **Table 23.41, Simultaneous Rewrite Methods and when They are Triggered**.
- To select which upper channel is monitored for simultaneous rewrite triggers, use TAUDnRDC.TAUDnRDCm (prerequisite: TAUDnRDS.TAUDnRDSm is set in upper channel.)

23.6.2.2 Start Counter and Count Operation

- To start all the TAUDnCNTm counters of the channel group, set the corresponding TAUDnTS.TAUDnTSm bits to 1. The values of TAUDnTOL.TAUDnTOLm and the data registers (TAUDnCDRm) are loaded into the corresponding TAUDnTOL.TAUDnTOLm buffer (TAUDnTOL.TAUDnTOLm buf) and data buffer registers (TAUDnCDRm buf) and the counters start.
- Setting the reload data trigger bit (TAUDnRDT.TAUDnRDTm) to 1 sets the reload flag (TAUDnRSF.TAUDnRSFm) to 1, enabling simultaneous rewrite. TAUDnRSF.TAUDnRSFm remains set to 1 until simultaneous rewrite is completed.
- When the specified trigger for simultaneous rewrite is detected, the TAUDnRSF.TAUDnRSFm bit is checked to see if simultaneous rewrite is enabled (TAUDnRSF.TAUDnRSFm = 1). If it is, simultaneous rewrite is carried out. Otherwise the simultaneous rewrite is not carried out and waits for the next trigger detection.

23.6.2.3 Simultaneous Rewrite

- When simultaneous rewrite is enabled (TAUDnRSF.TAUDnRSFm = 1) and the simultaneous rewrite trigger is detected, the current values of the data registers are copied to their buffers. These values are then loaded into the corresponding counters and are applied the next time the counter starts or restarts.
- The TAUDnRSF.TAUDnRSFm bit is set to 0, and the system awaits the next simultaneous rewrite trigger.

23.6.3 Other General Rules of Simultaneous Rewrite

The following rules also apply:

- TAUDnRDE.TAUDnRDEm, TAUDnRDS.TAUDnRDSm, TAUDnRDM.TAUDnRDMm, and TAUDnRDC.TAUDnRDCm cannot be changed while the counter is in operation (TAUDnTE.TAUDnTEm = 1).
- TAUDnTOL.TAUDnTOLm can only be rewritten during operation with PWM output function or triangle PWM output function. For all other output functions, TAUDnTOL.TAUDnTOLm should be written before the counter starts. If it is rewritten while any other function is used, TAUDnTTOUTm outputs an invalid wave.
- When an upper channel is used as a channel issuing the simultaneous rewrite trigger (TAUDnRDS.TAUDnRDSm = 1), the TAUDnRDC.TAUDnRDCm bit controls all the lower channels. This means that if the TAUDnRDC.TAUDnRDCm bits of CH2 and CH7 are set to 1 and the TAUDnRDC.TAUDnRDCm bits of other channels are set to 0, CH2 and CH7 serve as simultaneous rewrite trigger generation channels. CH2 controls the lower channels CH3 to CH6, and CH7 controls the lower channels CH8 to CH15.
- If simultaneous rewrite is enabled and an upper channel is selected for the simultaneous rewrite trigger (TAUDnRDE.TAUDnRDEm and TAUDnRDS.TAUDnRDSm = 1) but no upper channel is set (TAUDnRDC.TAUDnRDC[15:0] = 0), simultaneous rewrite cannot take place.

23.6.4 Types of Simultaneous Rewrite

In the following section, the four simultaneous rewrite methods are explained using timing diagrams.

23.6.4.1 Simultaneous Rewrite when the Master Channel (Re)starts Counting (Method A)

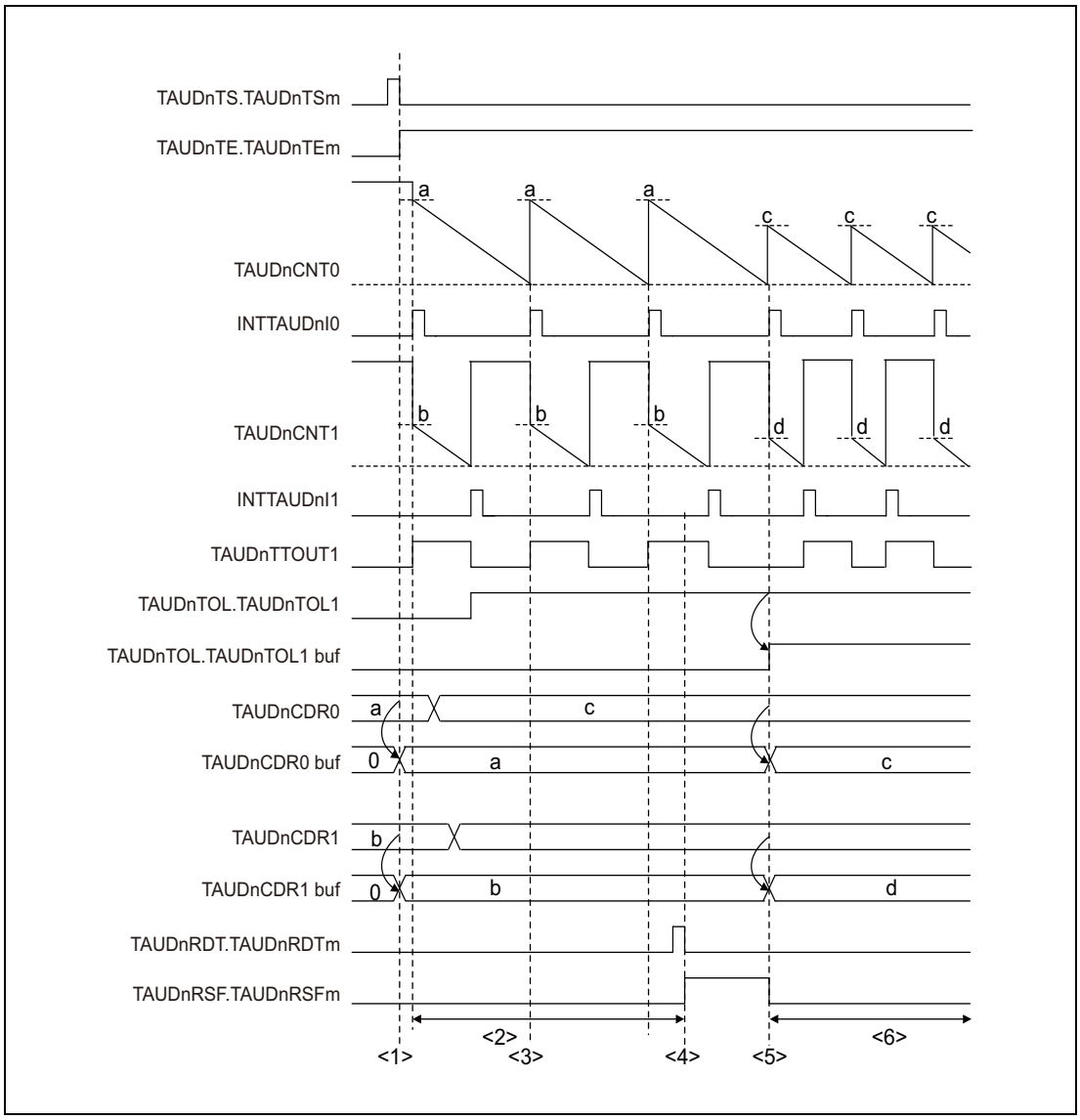

Figure 23.5 Simultaneous Rewrite when the Master Channel (Re)starts Counting

Setup:

CH0 is the master channel, which starts counting down, and CH1 represents an arbitrary slave channel. The simultaneous rewrite method A is applied.

Description:

(1) When TAUDnTS.TAUDnTSm = 1 is set, the value of TAUDnCDRm is copied to the TAUDnCDRm buffer and the value of TAUDnTOL.TAUDnTOLm is copied to the TAUDnTOL.TAUDnTOLm buffer.

(2) The TAUDnCDRm and TAUDnTOL.TAUDnTOLm registers can be written at any time.

(3) CH0 restarts counting, but simultaneous rewrite does not occur because it is disabled (TAUDnRSF.TAUDnRSFm = 0)

(4) The reload data trigger bit (TAUDnRDT.TAUDnRDTm) is set to 1 which sets the status flag (TAUDnRSF.TAUDnRSFm = 1), enabling simultaneous rewrite.

(5) Because simultaneous rewrite is enabled, it is triggered when CH0 restarts counting. The TAUDnCDRm value is loaded into the TAUDnCDRm buffer and the TAUDnTOL.TAUDnTOLm value is loaded into the TAUDnTOL.TAUDnTOLm buffer.

(6) The counters count down and await the next simultaneous rewrite trigger. The values of TAUDnCDRm and TAUDnTOL.TAUDnTOLm can be changed again.

23.6.4.2 Simultaneous Rewrite at the Peak of a Triangular Wave of Slave Channel (Method B)

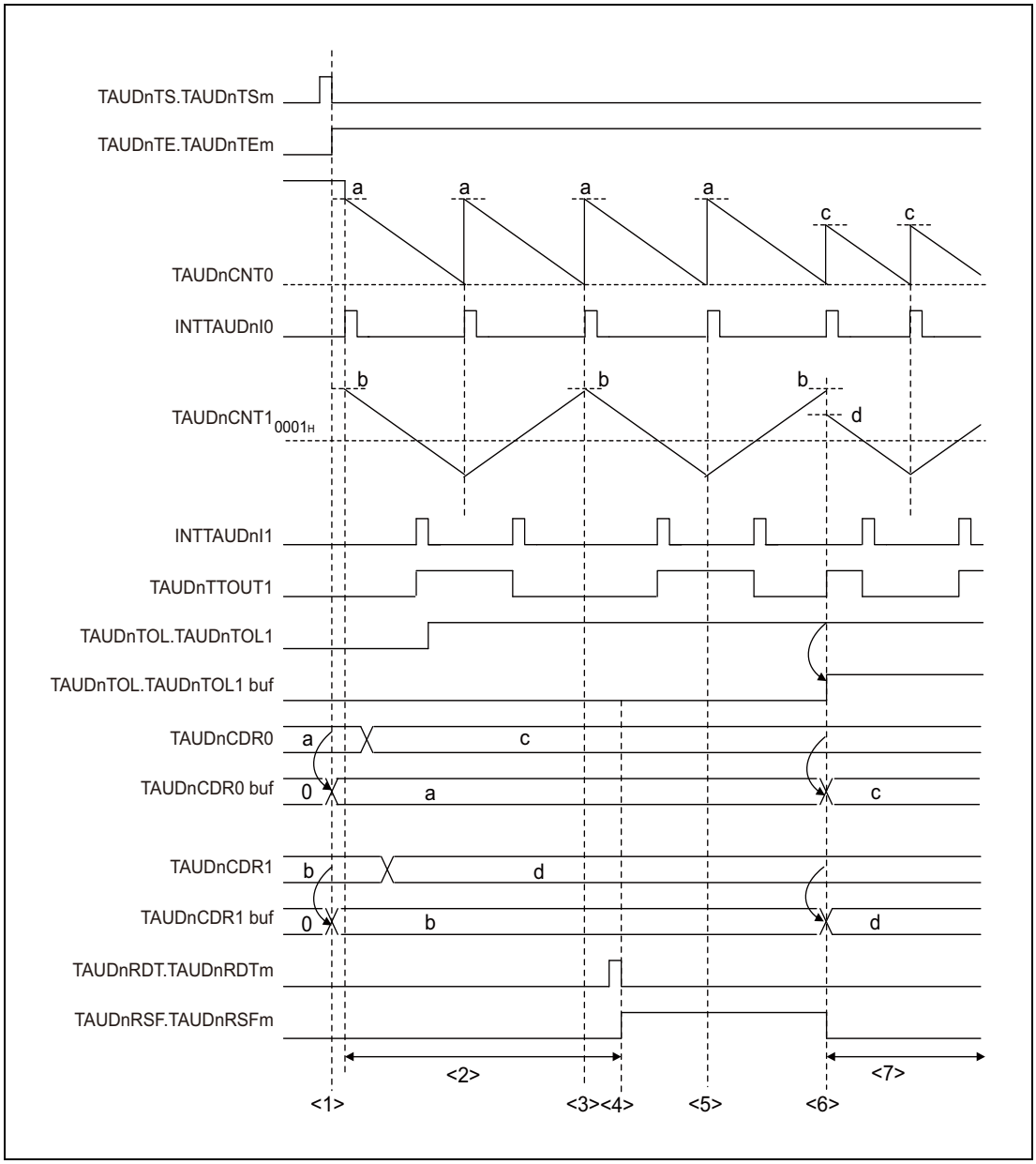

Figure 23.6 Simultaneous Rewrite at the Peak of a Triangular Wave of Slave Channel

Setting

CH0 is the master channel which performs counting down, and CH1 represents an arbitrary slave channel. The simultaneous rewrite method B is applied.

Description:

(1) When TAUDnTS.TAUDnTSm = 1 is set, the value of TAUDnCDRm is copied to the TAUDnCDRm buffer.

(2) The TAUDnCDRm and TAUDnTOL registers can be written at any time.

(3) Simultaneous rewrite does not occur because it is disabled (TAUDnRSF.TAUDnRSFm = 0).

(4) The reload data trigger bit (TAUDnRDT.TAUDnRDTm) is set to 1 which sets the status flag (TAUDnRSF.TAUDnRSFm = 1), enabling simultaneous rewrite.

(5) Simultaneous rewrite does not take place at the bottom of the triangular cycle.

(6) Simultaneous rewrite takes place at the top of the triangular cycle. The TAUDnCDRm value is loaded into the TAUDnCDRm buffer, the TAUDnTOL.TAUDnTOLm value is loaded into the TAUDnTOL.TAUDnTOLm buffer.

(7) The counters count down and await the next simultaneous rewrite trigger. The values of TAUDnCDRm and TAUDnTOL.TAUDnTOLm can be changed again.

23.6.4.3 Simultaneous Rewrite when INTTAUDnIm is Generated on an Upper Channel Specified by TAUDnRDC.TAUDnRDCm (Method C1)

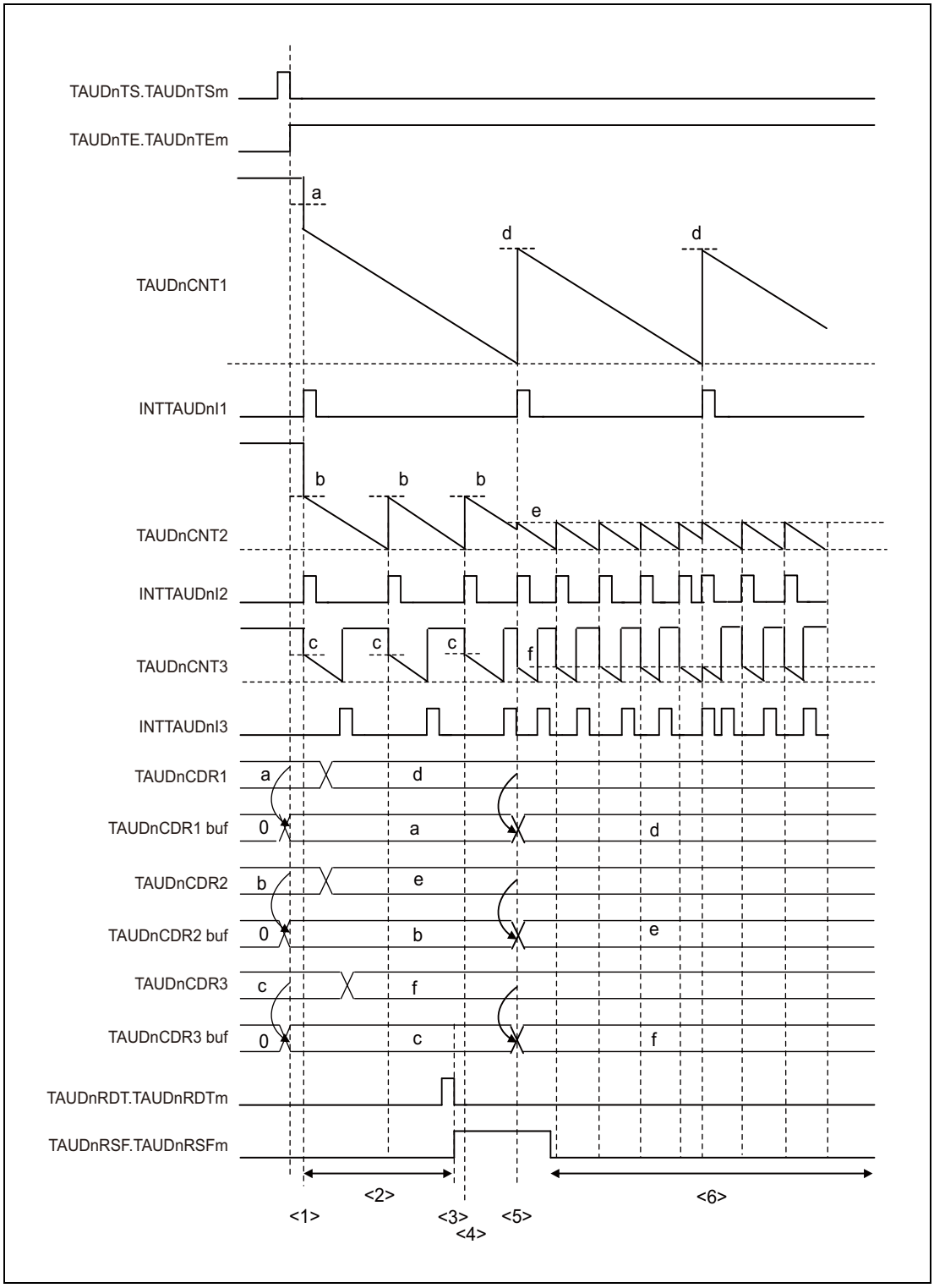

Figure 23.7 Simultaneous Rewrite When INTTAUDnIm Is Generated on an Upper Channel Specified by TAUDnRDC.TAUDnRDCm

Setting

CH1 is an upper channel used counting down, CH2 is a master channel, and CH3 is the slave channel. The simultaneous rewrite method C1 is applied. The TAUDnRDC register specifies a channel which generates simultaneous rewrite triggers.

Description:

(1) When TAUDnTS.TAUDnTSm is set to 1, TAUDnCDRm value is copied to the TAUDnCDRm buffer.

(2) The TAUDnCDRm register is always ready to write.

(3) By setting the reload data trigger bit (TAUDnRDT.TAUDnRDTm) to 1, the status flag is set (TAUDnRSF.TAUDnRSFm = 1) to enable simultaneous rewrite.

(4) Simultaneous rewrite is triggered only by a CH1 interrupt. Therefore, simultaneous rewrite is not conducted even if enabled.

(5) Simultaneous rewrite is triggered by INT1 which is generated when counter1 reaches 0000_H. The TAUDnCDRm values are loaded into the corresponding TAUDnCDRm buffers.

(6) The counter counts down and awaits the next simultaneous rewrite trigger. The values of the TAUDnCDRm registers can be rechanged.

23.6.4.4 Simultaneous Rewrite when INTTAUDnIm is Generated on an Upper Channel Specified by TAUDnRDC.TAUDnRDCm that in Turn is Triggered by an External Signal (Method C2)

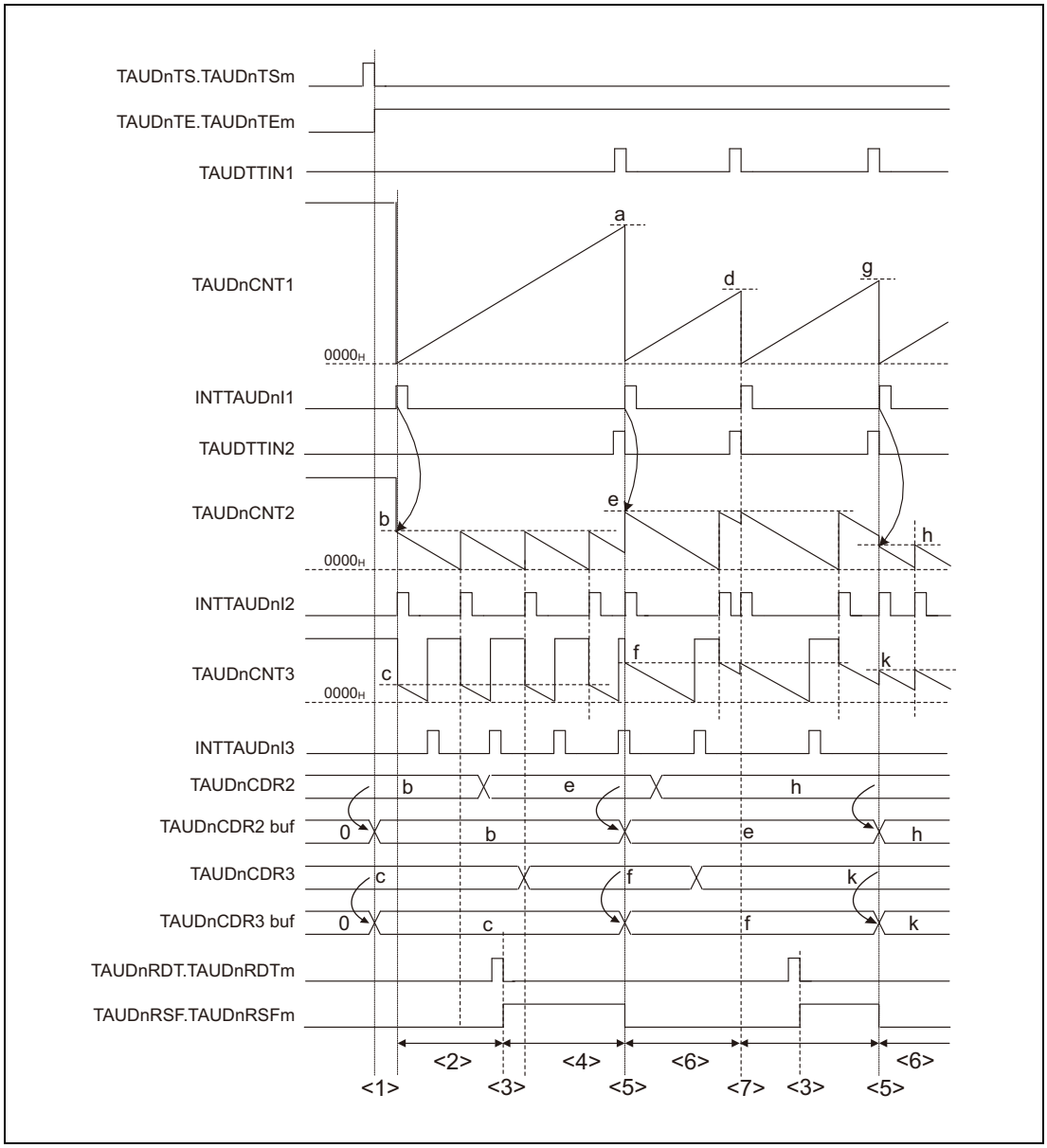

Figure 23.8 Simultaneous Rewrite when INTTAUDnIm is Generated on an Upper Channel Specified by TAUDnRDC.TAUDnRDCm that in Turn is Triggered by an External Signal

Setup:

CH1 is an upper channel used counting up, CH2 is a master channel, and CH3 is the slave channel. The synchronous channel operation method C2 is applied. The TAUDnRDC register specifies which upper channel is monitored for an INTTAUDnIm trigger.

Description:

(1) When TAUDnTS.TAUDnTSm is set to 1, TAUDnCDRm value is copied to the TAUDnCDRm buffer. However, the TAUDnCDR1 value is not copied to the TAUDnCDR1 buffer because TAUDnCDR1 is in capture mode.

(2) The TAUDnCDRm register is always ready to write.

(3) By setting the reload data trigger bit (TAUDnRDT.TAUDnRDTm) to 1, the status flag is set (TAUDnRSF.TAUDnRSFm = 1) to enable simultaneous rewrite.

(4) Simultaneous rewrite is triggered only by a CH1 interrupt. Therefore, simultaneous rewrite is not conducted even if enabled.

(5) Simultaneous rewrite is triggered by INT1 which is caused by external signal TIN1. The TAUDnCDRm values are written to the corresponding TAUDnCDRm buffers.

(6) The counters count down and await the next simultaneous rewrite trigger. The values of the TAUDnCDRm registers can be changed again.

(7) An external signal occurs at TIN2 but simultaneous rewrite does not take place because it is disabled (TAUDnRSF.TAUDnRSFm = 0).

23.7 Channel Output Modes

The output of the TAUDnTTOUTm pin can be controlled in two ways, the latter of which can be further split into individual modes.

- By software (TAUDnTOE.TAUDnTOEm = 0)
  When controlled by software, the value written in the output register bit (TAUDnTO.TAUDnTOm) is sent out of the output pin (TAUDnTTOUTm).
- By TAUD signals (TAUDnTOE.TAUDnTOEm = 1)
  When controlled by TAUD signals, the output level of TAUDnTTOUTm is set or reset or toggled by internal signals. The value of TAUDnTO.TAUDnTOm is updated accordingly to reflect the value of TAUDnTTOUTm
  - Independently (TAUDnTOM.TAUDnTOMm = 0)
    In case of independent operation, the output of the TAUDnTTOUTm pin is only affected by settings of channel m. Therefore, independent channel operation should be selected (TAUDnTOM.TAUDnTOMm = 0).
  - Synchronously (TAUDnTOM.TAUDnTOMm = 1)
    In case of synchronous operation, the output of the TAUDnTTOUTm pin is affected by settings of channel m and those of other channels. Therefore, synchronous channel operation should be selected for all synchronized channels (TAUDnTOM.TAUDnTOMm = 1).

The TAUDnTO.TAUDnTOm bit can always be read to determine the current value of TAUDnTTOUTm, regardless of whether the pin is controlled by software, operated independently, or operated synchronously.

Control bits

The settings of the control bits required to select a specific channel output mode are listed in **Table 23.43, Channel Output Modes**.

The channel output modes are described in details below.

- **Section 23.7.2, Channel Output Modes Controlled Independently by TAUDn Signals**
- **Section 23.7.3, Channel Output Modes Controlled Synchronously by TAUDn Signals**

Batch operation of TAUDnTOm bit

Whether a set value is reflected to the TAUDnTOm bit or not is controlled by the TAUDnTOE.TAUDnTOEm bit.

The TAUDnTOm setting is written only to the bit (channel) set with TAUDnTOE.TAUDnTOEm bit = 0 when a write to the TAUDnTO register is attempted. No TAUDnTOm setting is reflected to the bit (channel) set with TAUDnTOE.TAUDnTOEm bit = 1.

NOTE

TAUDnTO.TAUDnTOm bit is placed so that its bit number corresponds to a channel number.

Output logic

Positive logic or negative logic of the output is specified by control bit TAUDnTOL.TAUDnTOLm.

The value of TAUDnTOL.TAUDnTOLm bit should be set before the counter is started. It can only be changed during operation with PWM output function or triangle PWM output function. Otherwise, changes to TAUDnTOL.TAUDnTOLm result in an invalid TAUDnTTOUTm signal output.

See **Section 23.6, Simultaneous Rewrite**.

The various channel output modes and the channel output control bits are listed in **Table 23.43**.

Table 23.43 Channel Output Modes

Channel Output Mode	TAUDn TOE. TAUDn TOEm	TAUDn TOM. TAUDn TOMm	TAUDn TOC. TAUDn TOCm	TAUDn TDE. TAUDn TDEm	TAUDn TRE. TAUDn TREm	TAUDn TME. TAUDn TMEm	TAUDn TDM. TAUDn TDMm
By software							
Independent channel output mode controlled by software	0	X					
By TAUD signals, independently							
Independent channel output mode 1	1	0	0	0	0	0	0
with real-time output					1		
Independent channel output mode 2			1		0		
By TAUD signals, synchronously							
Synchronous channel output mode 1	1	1	0	0	0	0	0
with non-complementary modulation output					1	X	
Synchronous channel output mode 2			1	0	0	0	0
with dead time output				1			
with one-phase PWM output							1
with complementary modulation output					1	1	0
with non-complementary modulation output			1	0			

- All combinations not listed in this table are forbidden.
- Bits marked with an x can be set to any value.

NOTES

1. The following bits cannot be changed during count operation (TAUDnTE.TAUDnTEm = 1):
   - TAUDnTOM.TAUDnTOMm
   - TAUDnTOC.TAUDnTOCm
   - TAUDnTDE.TAUDnTDEm
   - TAUDnTRE.TAUDnTREm
   - TAUDnTDM.TAUDnTDMm
2. The following bits cannot be changed during count operation (TAUDnTE.TAUDnTEm = 1) except in channel output modes with modulation output:
   - TAUDnTME.TAUDnTMEm
   - TAUDnTDL.TAUDnTDLm

23.7.1 General Procedures for Specifying a Channel Output Mode

This section describes the general procedures for specifying a TAUDnTTOUTm channel output mode. The prerequisite is that timer output operation is disabled (TAUDnTOE.TAUDnTOEm = 0).

(1) Set TAUDnTO.TAUDnTOm to specify the initial level of the TAUDnTTOUTm output.

(2) Set channel output mode according to **Table 23.43, Channel Output Modes**, and the output logic using the TAUDnTOL.TAUDnTOLm bit.

(3) Start the counter (TAUDnTS.TAUDnTSm = 1).

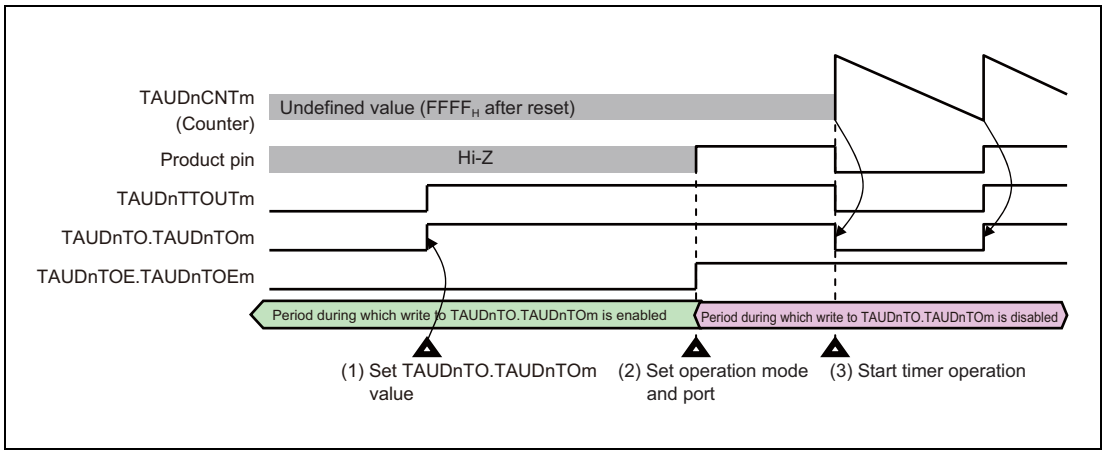

Figure 23.9 General Procedure for Specifying a TAUDnTTOUTm Channel Output Mode

23.7.2 Channel Output Modes Controlled Independently by TAUDn Signals

This section lists the channel output modes that are controlled independently by TAUDn signals. The control bits used to specify a mode are listed in **Table 23.43, Channel Output Modes**.

23.7.2.1 Independent Channel Output Mode 1

Set/reset conditions

In this output mode, TAUDnTTOUTm toggles when INTTAUDnIm is detected. The value of TAUDnTOL.TAUDnTOLm is ignored.

Prerequisites

There are no prerequisites other than those shown in **Table 23.43, Channel Output Modes**

23.7.2.2 Independent Channel Output Mode 1 with Real-Time Output

In this output mode, the value of TAUDnTRO.TAUDnTROm bit of the trigger channel is output to TAUDnTTOUTm. The trigger channel is specified by setting the corresponding TAUDnTRC.TAUDnTRCm bit to 1. It controls all lower channels for which TAUDnTRC.TAUDnTRCm = 0.

Set/reset conditions

The value of TAUDnTRO.TAUDnTROm bit is sent to TAUDnTTOUTm only when an INTTAUDnIm interrupt occurs on the trigger channel. The interrupt is generated either:

- at certain specified intervals or
- on detection of a valid TAUDnTTINm input edge/counter start

The type of trigger is set using the TAUDnCMORm.TAUDnMD[4:1] bits.

Prerequisites

Both master and slave channels can be set as a trigger generation channel. A channel for which TAUDnTRC.TAUDnTRCm is set to 1 serves as a trigger generation channel even if TAUDnTRE.TAUDnTREm is set to 0.

If there is no channel for which TAUDnTRC.TAUDnTRCm is set to 1 or if TAUDnTRC.TAUDnTRC0 = 0, real-time output cannot take place.

This can be seen in **Figure 23.10**.

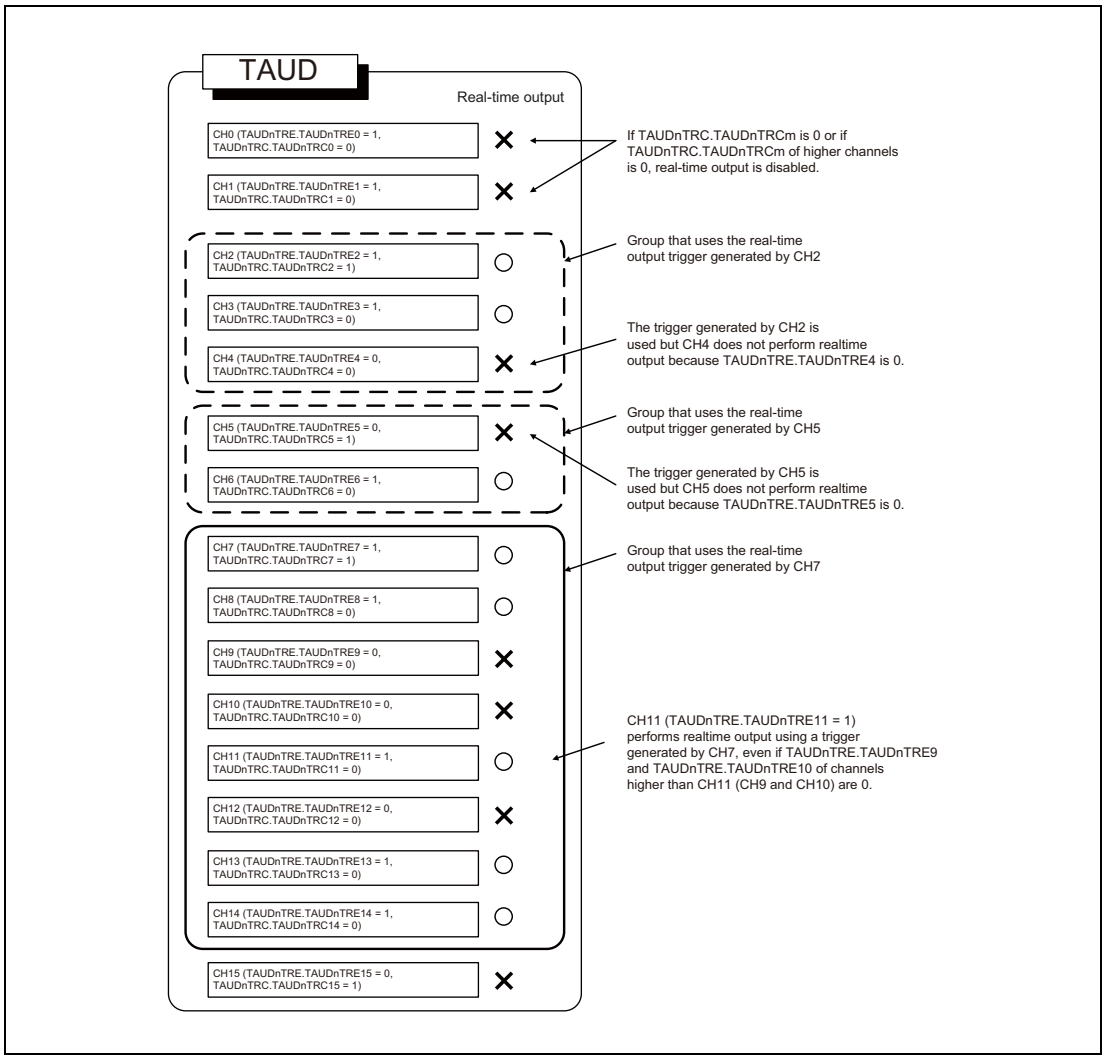

Figure 23.10 Real-Time Output

23.7.2.3 Independent Channel Output Mode 2

Set/reset conditions

In this output mode, TAUDnTTOUTm is set when INTTAUDnIm occurs at the time of count start, and reset when INTTAUDnIm occurs due to a match between TAUDnCNTm and TAUDnCDRm.

Prerequisites

There are no prerequisites other than those shown in **Table 23.43, Channel Output Modes**.

23.7.3 Channel Output Modes Controlled Synchronously by TAUDn Signals

This section lists the channel output modes that are controlled synchronously by TAUDn signals. The control bits used to specify a mode are listed in **Table 23.43, Channel Output Modes**.

23.7.3.1 Synchronous Channel Output Mode 1

Set/reset conditions

In this output mode, INTTAUDnIm of master channel serves as a set signal and INTTAUDnIm of the slave channel as a reset signal. If INTTAUDnIm of master channel and INTTAUDnIm of the slave channel are generated at the same time, INTTAUDnIm of the slave channel (reset signal) has priority over INTTAUDnIm (set signal) of master channel, i.e., the master channel is ignored.

Prerequisites

There are no prerequisites other than those shown in **Table 23.43, Channel Output Modes**.

23.7.3.2 Synchronous Channel Output Mode 1 with Non-Complementary Modulation Output

Set/reset conditions

In this output mode, TAUDnTTOUTm outputs the result of an AND operation between the PWM output and the real-time output bit (TAUDnTRO.TAUDnTROm) of a channel.

The phase period to which the dead time is added is specified using the TAUDnTDL.TAUDnTDLm bit; for positive phase set TAUDnTDL.TAUDnTDLm = 0 and for negative phase set TAUDnTDL.TAUDnTDLm = 1.

Prerequisites

A set of at least three channels is required to generate the PWM output. The master channel and slave channel 1 generate a period, and slave channel 2 generates the duty cycle. In typical applications, five more slave channels are also used that operate in the same manner as slave channel 2.

Only the PWM output and the real-time output bit of the same channel can be combined.

TAUDnTRO.TAUDnTROm, TAUDnTME.TAUDnTMEm, and TAUDnTDL.TAUDnTDLm can only be changed during count operation.

- If TAUDnTME.TAUDnTMEm is changed, its new value is applied upon detection of INTTAUDnIm on the specified channel.
- If TAUDnTME.TAUDnTMEm and TAUDnTDL.TAUDnTDLm are changed, their new values are applied upon detection of INTTAUDnIm on the master channel.

23.7.3.3 Synchronous Channel Output Mode 2

In this output mode, the operating mode should be set to up/down count mode. The result is a triangle PWM wave at TAUDnTTOUTm. For details, see **Section 23.13.6, Triangle PWM Output Function**.

Set/reset conditions

TAUDnCNTm of the slave channel counts down and up alternatively. When it passes 0001_H it generates an interrupt, causing TAUDnTTOUTm to toggle.

Prerequisites

A set of two channels is required to generate the triangle PWM output. TAUDnTTOUTm should be set to 0 before the function starts.

23.7.3.4 Synchronous Channel Output Mode 2 with Dead Time Output

In this output mode, a dead time delay is added to TAUDnTTOUTm. The set/reset conditions are shown in **Figure 23.11**.

Set/reset conditions

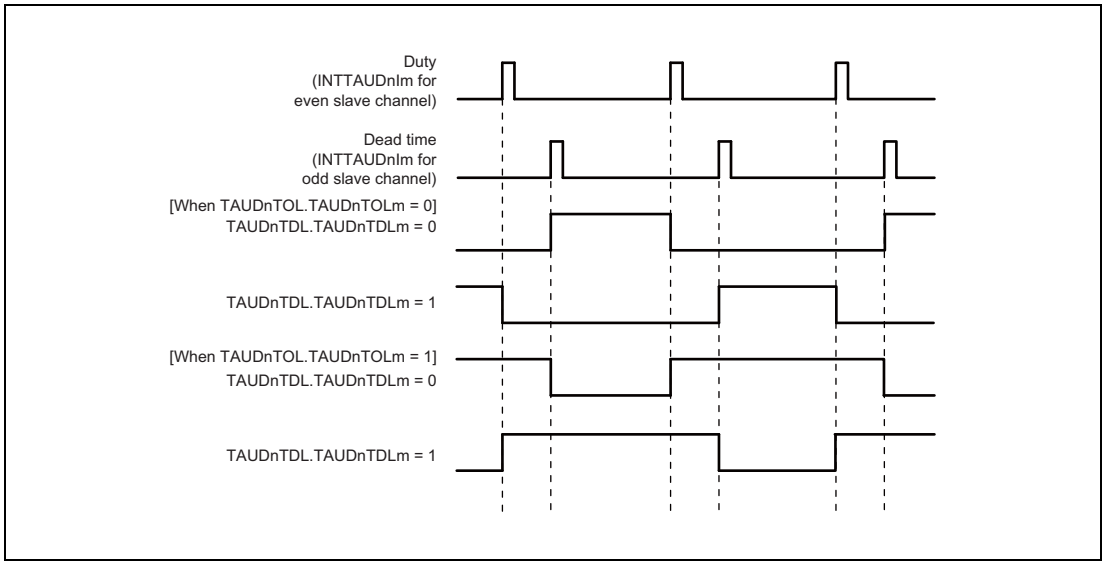

Figure 23.11 Set/Reset Conditions for Synchronous Channel Output Mode 2 with Dead Time Output

With regard to the edge to which dead time is added, set TAUDnTDL.TAUDnTDLm = 0 for rising edges and TAUDnTDL.TAUDnTDLm = 1 for falling edges.

Prerequisites

Dead time control requires a set of three channels, each operating in the following modes:

- One master channel
  The master channel should be set to interval timer mode.
- One even-numbered slave channel
  The even-numbered slave channel should be set up/down count mode.
- One odd-numbered slave channel (even-numbered channel + 1)
  The odd-numbered slave channel should be set to one-count mode.

The values of the following bits should be the same for the odd-numbered channel and the even-numbered channel:

- TAUDnTOE.TAUDnTOEm
- TAUDnTME.TAUDnTMEm
- TAUDnTRE.TAUDnTREm
- TAUDnTOM.TAUDnTOMm
- TAUDnTOC.TAUDnTOCm
- TAUDnTDE.TAUDnTDEm
- TAUDnTDM.TAUDnTDMm

23.7.3.5 Synchronous Channel Output Mode 2 with One-Phase PWM Output

In this output mode, a dead time delay is added to TAUDnTTOUTm. The set/reset conditions are shown in **Figure 23.12**.

Set/reset conditions

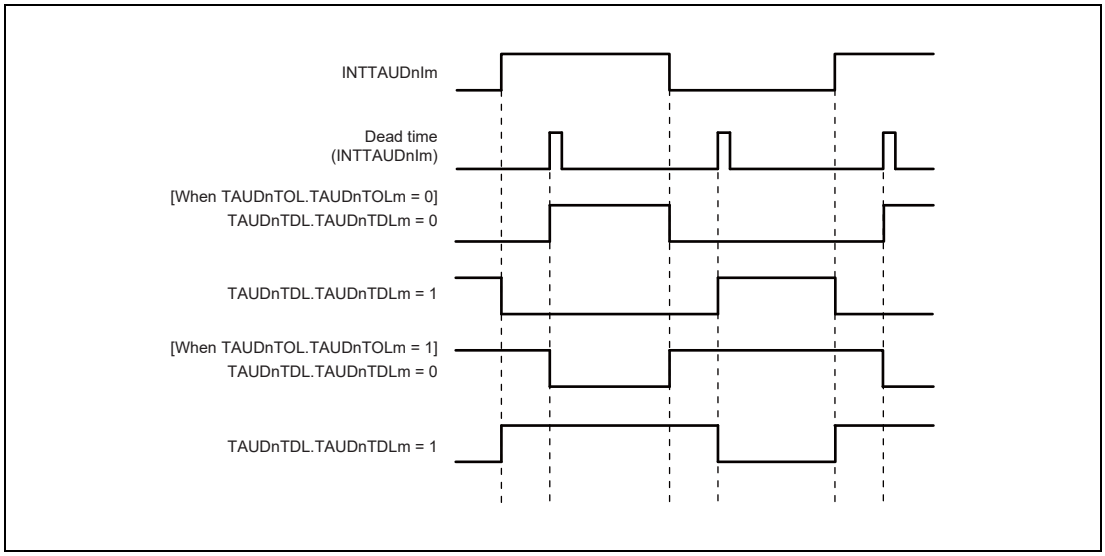

Figure 23.12 Set/Reset Conditions for Synchronous Channel Output Mode 2 with One-Phase PWM Output

With regard to the edge to which dead time is added, set TAUDnTDL.TAUDnTDLm = 0 for rising edges and TAUDnTDL.TAUDnTDLm = 1 for falling edges.

Prerequisites

One-phase PWM output control requires a set of two channels:

- One even-numbered slave channel
- One odd-numbered slave channel (even-numbered channel + 1)
  The odd-numbered slave channel should be set to one-count mode.

The values of the following bits should be the same for the odd-numbered channel and the even-numbered channel:

- TAUDnTOE.TAUDnTOEm
- TAUDnTME.TAUDnTMEm
- TAUDnTRE.TAUDnTREm
- TAUDnTOM.TAUDnTOMm
- TAUDnTOC.TAUDnTOCm
- TAUDnTDE.TAUDnTDEm
- TAUDnTDM.TAUDnTDMm

23.7.3.6 Synchronous Channel Output Mode 2 with Complementary Modulation Output

Set/reset conditions

In this output mode, TAUDnTTOUTm outputs a PWM signal, a high signal, or a low signal depending on the value of real-time output bit (TAUDnTRO.TAUDnTROm), the modulation output bit (TAUDnTME.TAUDnTMEm), and the output level bit (TAUDnTOL.TAUDnTOLm) of a pair of slave channels.

For details, see **Section 23.14.3, Complementary Modulation Output Function**.

Prerequisites

A set of at least four channels is required for this mode. The master channel and slave channel 1 generate a period, slave channel 2 generates a duty cycle, and slave channel 3 generates dead time. Slave channels 2 and 3 are a pair. In typical applications, 4 more channels are also used, which operates in the same manner as slave channels 2 and 3 respectively.

TAUDnTRO.TAUDnTROm, TAUDnTME.TAUDnTMEm, and TAUDnTDL.TAUDnTDLm can only be changed during count operation.

- If TAUDnTME.TAUDnTMEm is changed during operation, its new value is applied upon detection of INTTAUDnIm at the specified channel.
- If TAUDnTME.TAUDnTMEm and TAUDnTDL.TAUDnTDLm are changed, their new values are applied upon detection of INTTAUDnIm on an even-numbered slave channel.

23.7.3.7 Synchronous Channel Output Mode 2 with Non-Complementary Modulation Output

The difference from synchronous channel output mode 1 with non-complementary modulation output is the PWM wave shape.

Mode 1 has a rectangular wave while mode 2 has a triangular wave.

23.8 Start Timing in Each Operating Modes

This section describes the timing at which the counter starts after TAUDnTS.TAUDnTSm is set to 1 in each operating mode.

In all modes, the value of data register and whether or not an interrupt occurs depends on mode and register settings.

CAUTION

The count start timing described in this section is for your reference. Actually, the count start timing depends on the count clock timing.

23.8.1 Interval Timer Mode, Judge Mode, Capture Mode, and Up/Down Count Mode

The counter starts operating with the next count clock after TAUDnTS.TAUDnTSm is set to 1. The value of data register is also loaded when the counter starts.

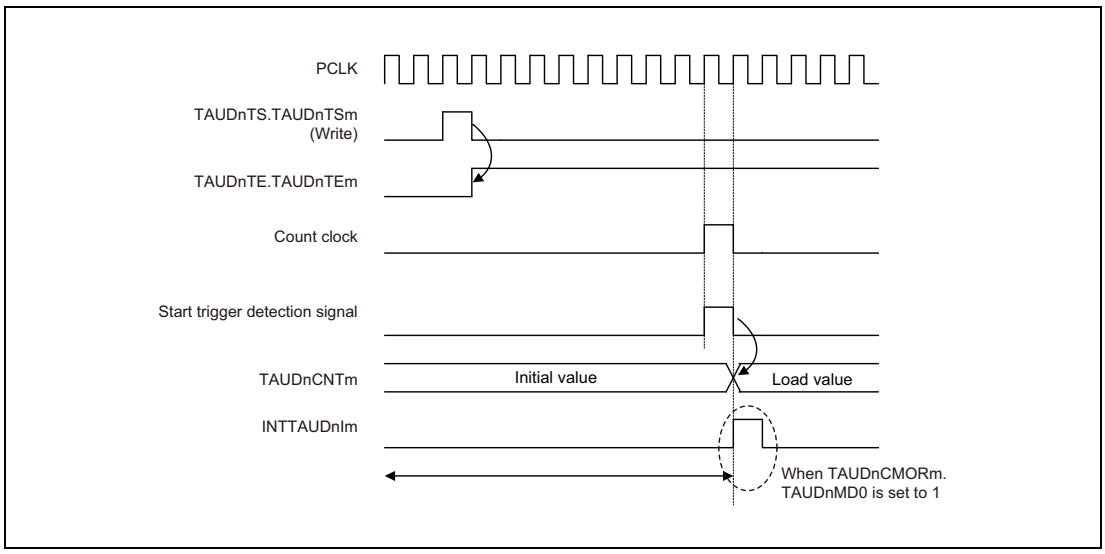

Figure 23.13 Start Timing in Interval Timer Mode, Judge Mode, Capture Mode, and Up/Down Count Mode

NOTE

Make sure to set TAUDnCMORm.TAUDnMD0 = 0 when using the up/down count mode.

23.8.2 Event Count Mode

The value of data register is loaded as soon as TAUDnTS.TAUDnTSm is set to 1. The counter also starts immediately. The value of data register increments with subsequent count clocks.

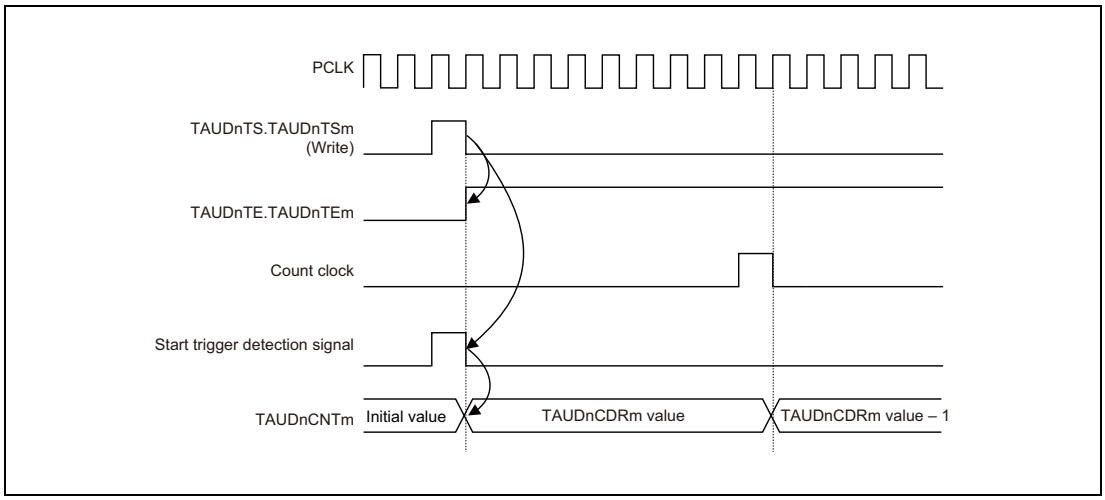

Figure 23.14 Start Timing in Event Count Mode

23.8.3 Other Operating Modes

In other operating modes, the counter operation start timing is triggered only upon detection of a valid edge of TAUDnTTINm. Once the counter starts, the value of data register is also loaded. The count clock cycles, which is irrelevant to start of counter operation, determine the frequency with which all operations take place.

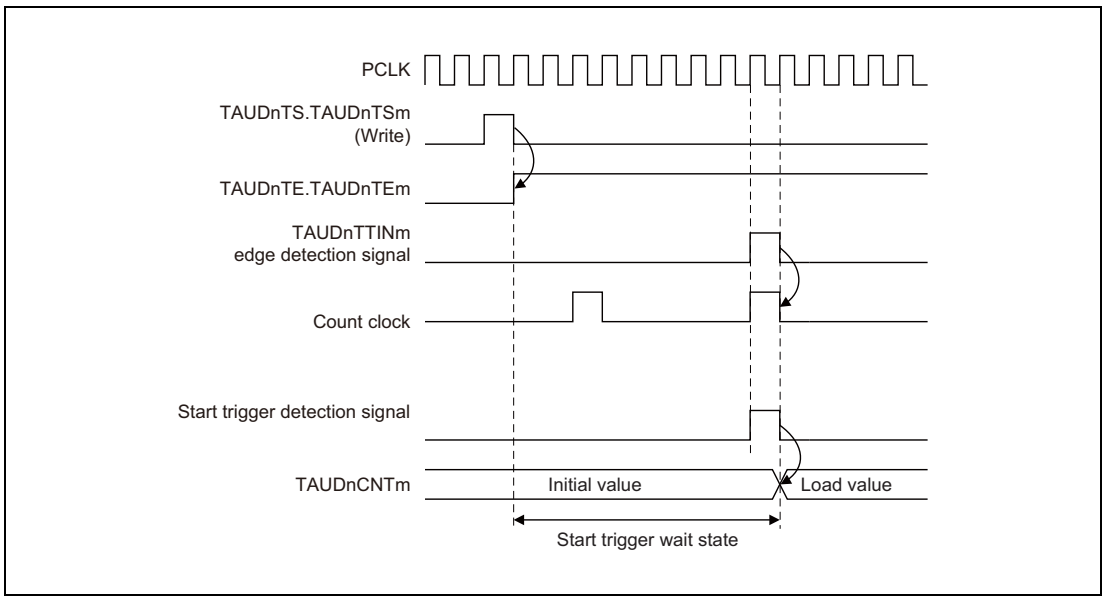

Figure 23.15 Start Timing in Other Operating Modes

23.9 TAUDnTTOUTm Output and INTTAUDnIm Generation when Counter Starts or Restarts

When the counter starts, it is possible to specify whether an INTTAUDnIm is generated using the TAUDnCMOR.TAUDnMD0 bit. The way in which the setting of the TAUDnCMORm.TAUDnMD0 bit determines whether an INTTAUDnIm interrupt is generated at the start of counting and the operation of TAUDTTOUTm depends on the selected mode. For details, see the description of TAUDnCMORm.TAUDnMD0 in the relevant individual functional blocks.

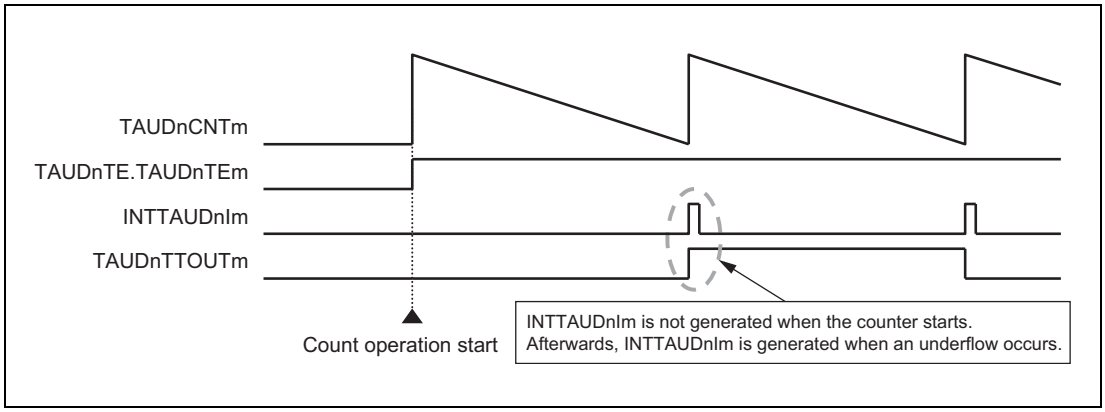

Figure 23.16 INTTAUDnIm Generation Timing (When TAUDnCMORm.TAUDnMD0 = 0)

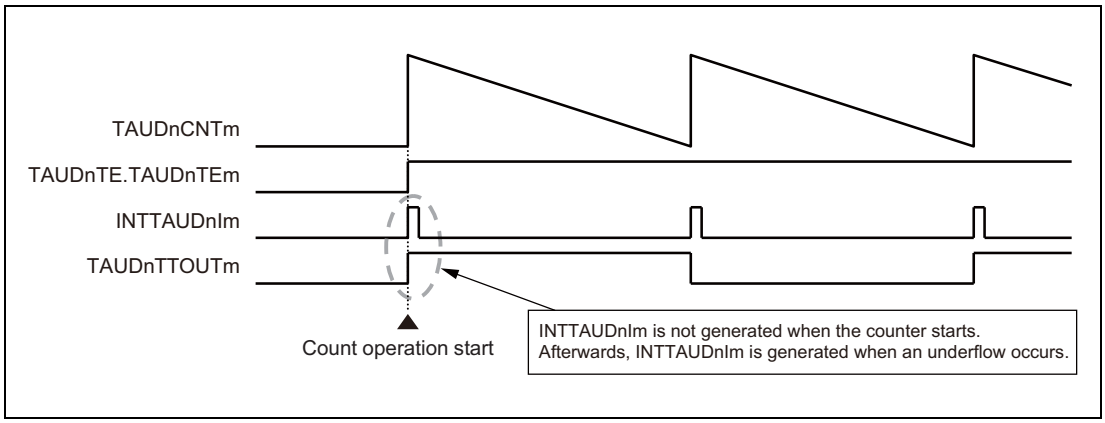

Figure 23.17 INTTAUDnIm Generation Timing (When TAUDnCMORm.TAUDnMD0 = 1)

23.10 Interrupt Generation upon Overflow

Certain independent functions that count up, overflow without generating an interrupt when they reach $FFFF_H$. This section describes how it is possible to generate an interrupt, by combining a channel operating in one of these modes with a channel in a different operation mode which counts down.

The appropriate operation mode for the second channel depends on the operation mode of the first channel. Nevertheless, the principle is the same for all combinations:

- Find an operation mode for the second channel that counts down in such a manner, that it reaches 0000_H at the same time as the first channel overflows (TAUDnCNTm = $FFFF_H$).
- Set TAUDnCDRm of the second channel to $FFFF_{H.}$
- The two channels must count at the same speed (i.e. they must have the same count clock).
- Both channels are triggered by the same TAUDnTTINm input signal.
- The trigger detection settings (TAUDnCMORm.TAUDnSTS[2:0] and TAUDnCMURm.TAUDnTIS[1:0]) must be identical for both channels.

Result:

The down-counter of the second channel reaches 0000_H at exactly the same time as the up-counter of the first channel overflows (TAUDnCNTm = $FFFF_H$). Thus the second channel generates the desired interrupt.

The following sections list the operating modes that count down that are required to match specific operating modes that count up, as well as example timing diagrams.

23.10.1 Combination of TAUDTTINm Input Pulse Interval Measuring Function and TAUDTTINm Input Interval Timer Function

When a capture trigger is input to TAUDTTINm of both channels simultaneously, an overflow from $FFFF_H$ in TAUDnCNTm of the TAUDTTINm input pulse interval measuring function is detected by INTTAUDnIm from the TAUDTTINm input interval timer function.

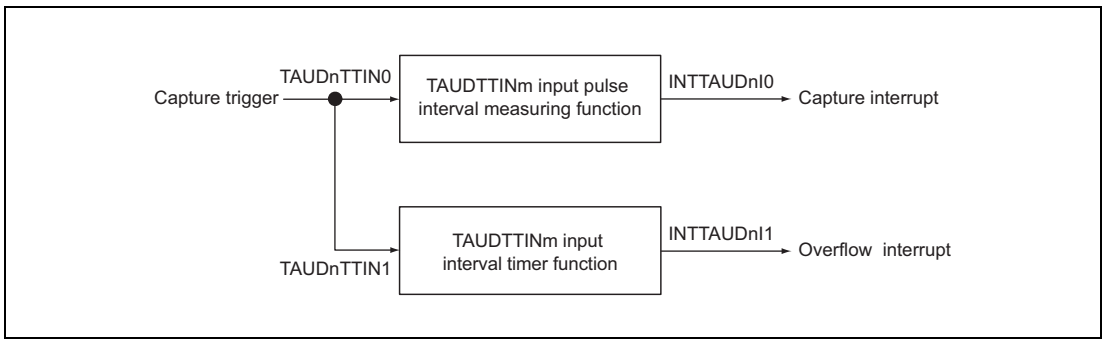

Figure 23.18 Combination of TAUDTTINm Input Pulse Interval Measuring Function and TAUDTTINm Input Interval Timer Function

Timing diagram

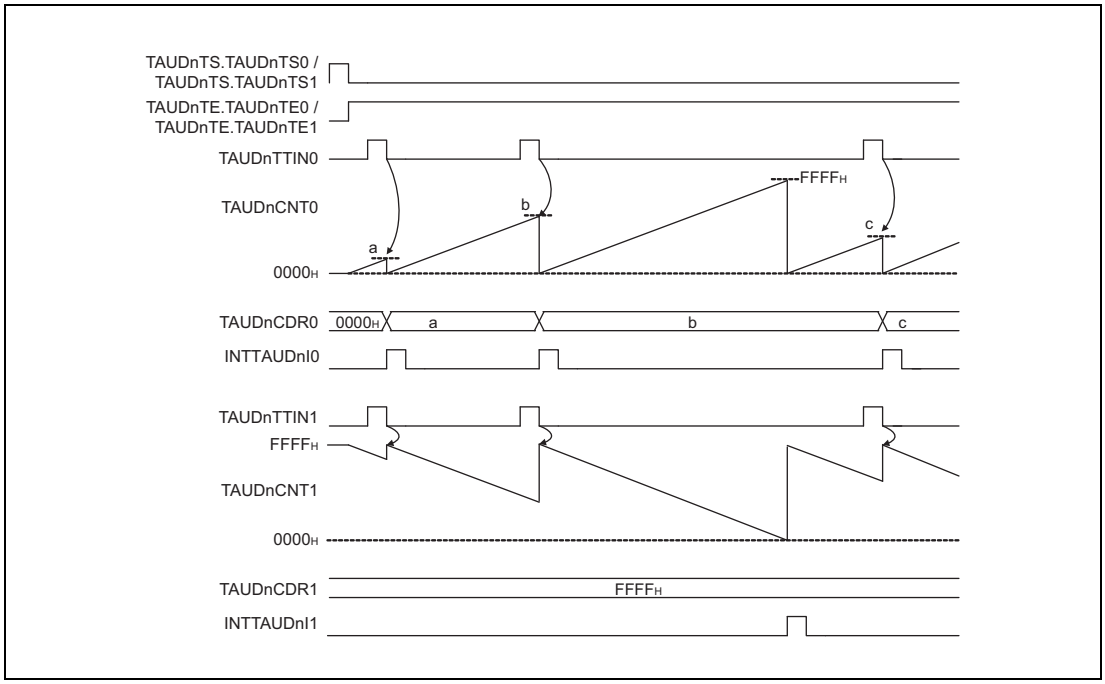

Figure 23.19 Interrupt Generation via Combination of TAUDTTINm Input Pulse Interval Measuring Function and TAUDTTINm Input Interval Timer Function

23.10.2 Combination of TAUDTTINm Input Signal Width Measuring Function and Overflow Interrupt Output Function (during TAUDTTINm Width Measurement)

When a capture trigger is input to TAUDTTINm of both channels simultaneously, an overflow from $FFFF_H$ in TAUDnCNTm of the TAUDTTINm input signal width measuring function is detected by INTTAUDnIm from the overflow interrupt output function (during TAUDTTINm width measurement).

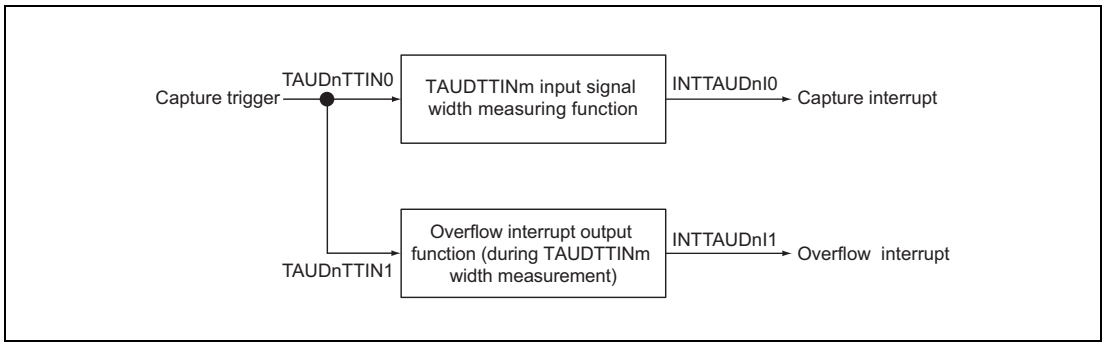

Figure 23.20 Combination of TAUDTTINm Input Signal Width Measuring Function and Overflow Interrupt Output Function (during TAUDTTINm Width Measurement)

Timing diagram

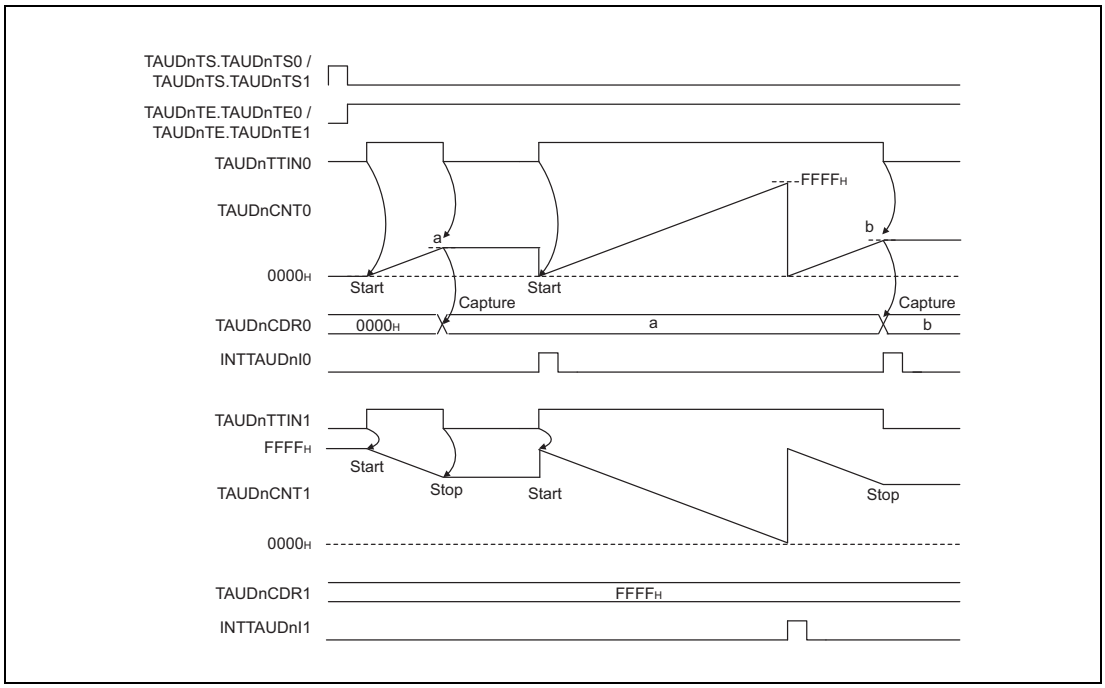

Figure 23.21 Interrupt Generation via Combination of AUDTTINm Input Signal Width Measuring Function and Overflow Interrupt Output Function (during TAUDTTINm Width Measurement)

23.10.3 Combination of TAUDTTINm Input Position Detecting Function and Interval Timer Function

When the counters of both channels are started simultaneously, an overflow from $FFFF_H$ in TAUDnCNTm of the TAUDTTINm input position detecting function is detected by INTTAUDnIm from the interval timer function.

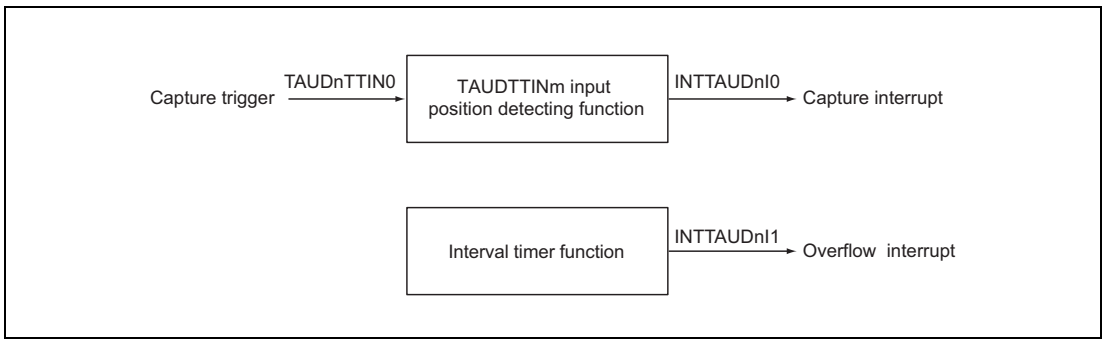

Figure 23.22 Combination of TAUDTTINm Input Position Detecting Function and Interval Timer Function

Timing diagram

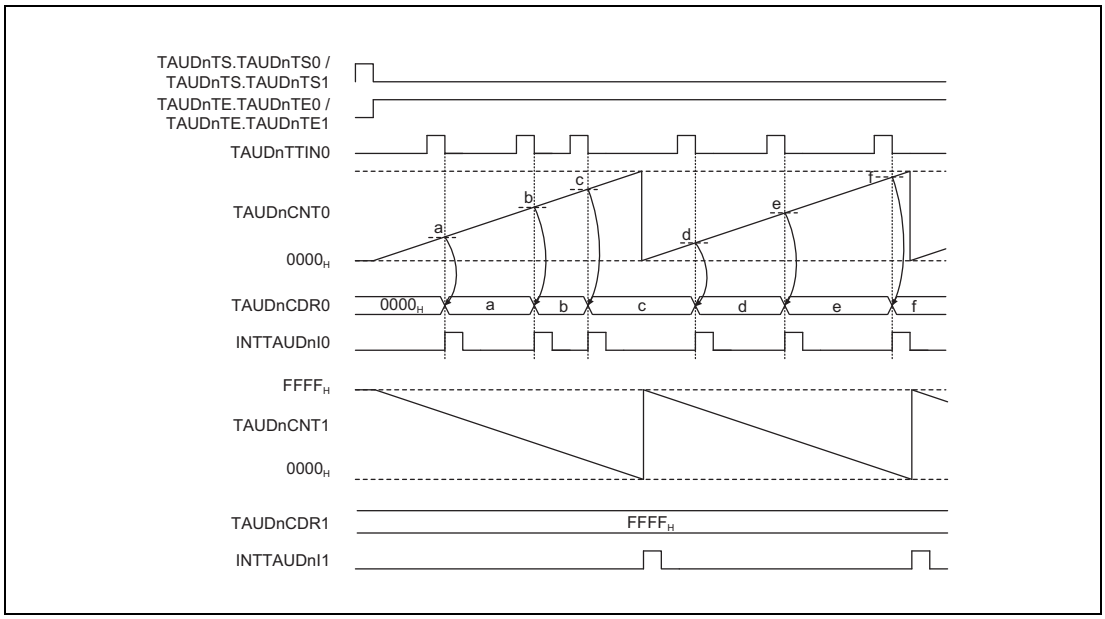

Figure 23.23 Interrupt Generation via Combination of TAUDTTINm Input Position Detecting Function and Interval Timer Function

23.10.4 Combination of TAUDTTINm Input Period Count Detecting Function and Overflow Interrupt Output Function (during TAUDTTINm Input Period Count Detection)

When a capture trigger is input to TAUDTTINm of both channels simultaneously, an overflow from $FFFF_H$ in TAUDnCNTm of the TAUDTTINm input period count detecting function is detected by INTTAUDnIm from the overflow interrupt output function (during TAUDTTINm input period count detection).

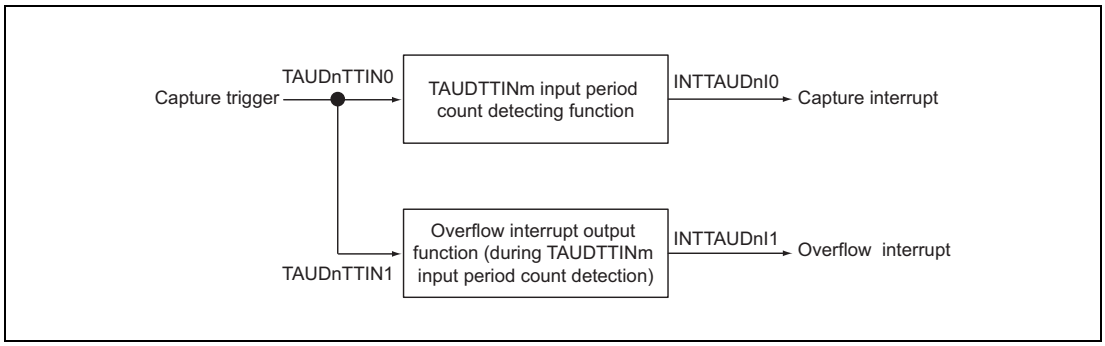

Figure 23.24 Combination of TAUDTTINm Input Period Count Detecting Function and Overflow Interrupt Output Function (during TAUDTTINm Input Period Count Detection)

Timing diagram

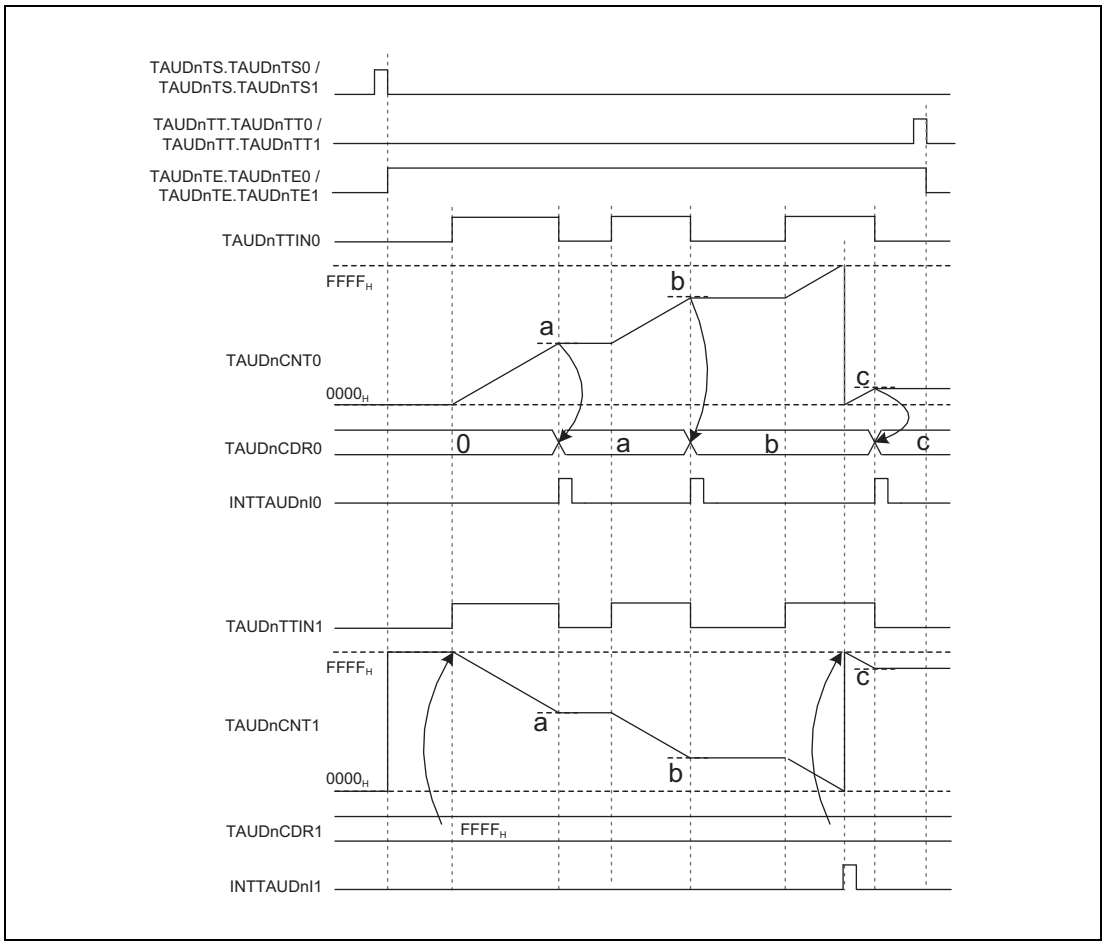

Figure 23.25 Interrupt Generation via Combination of TAUDTTINm Input Period Count Detecting Function and Overflow Interrupt Output Function (during TAUDTTINm Input Period Count Detection)

23.11 TAUDnTTINm Edge Detection

Edge detection is based on the operating clock. This means that an edge can only be detected at the next rising edge of the operating clock. This can lead to a maximum delay of one operating clock cycle.

Figure 23.26 shows when edge detection takes place.

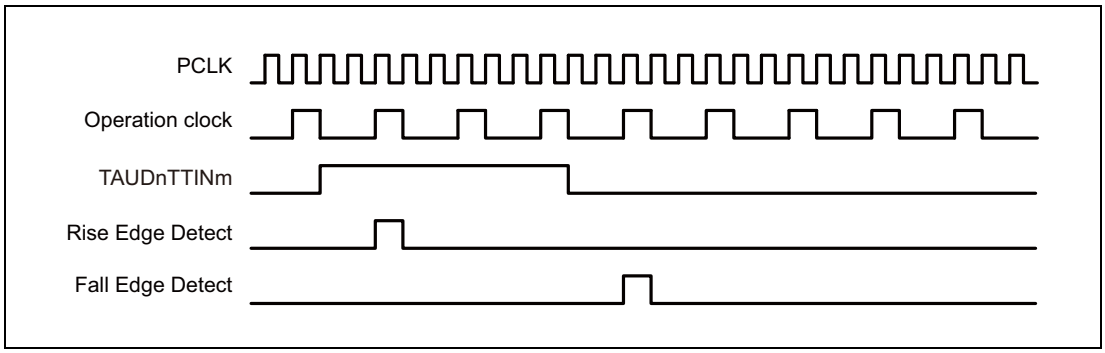

Figure 23.26 Basic Edge Detection Timing

Figure 23.26 shows an operation timing image. Actually, a noise filter or synchronization circuit which is located between the TAUDnIm pin and TAUDn causes a delay time.

23.12 Independent Channel Operation Functions

The following sections list the independent channel operation functions provided by the Timer Array Unit D. For a general overview of independent channel operation, see **Section 23.2, Overview**.

This section describes functions that generate interrupts at regular intervals or with a specified delay.

23.12.1 Interval Timer Function

23.12.1.1 Overview

Summary

This function is used as a reference timer for generating timer interrupts (INTTAUDnIm) at regular intervals. When an interrupt is generated, the TAUDnTTOUTm signal toggles, resulting in a square wave.

Prerequisites

- The operation mode must be set to Interval Timer Mode, refer to **Table 23.44, Contents of the TAUDnCMORm register for Interval Timer Function**
- The channel output mode must be set to Independent Channel Output Mode 1, refer to **Section 23.7, Channel Output Modes**

Functional description

The counter is started by setting the channel trigger bit (TAUDnTS.TAUDnTSm) to 1. This in turn sets TAUDnTE.TAUDnTEm = 1, enabling count operation. The current value of TAUDnCDRm is written to TAUDnCNTm and the counter starts to count down from this value.

When the counter reaches 0000_H, INTTAUDnIm is generated and the TAUDnTTOUTm signal toggles. TAUDnCNTm then reloads the TAUDnCDRm value and subsequently continues operation.

The value of TAUDnCDRm can be rewritten at any time, and the changed value of TAUDnCDRm is applied the next time the counter starts to count down.

The counter can be stopped by setting TAUDnTT.TAUDnTTm to 1, which in turn sets TAUDnTE.TAUDnTEm to 0. TAUDnCNTm and TAUDnTTOUTm stop but retain their values. The counter can be restarted by setting TAUDnTS.TAUDnTSm to 1. The counter can also be forcibly restarted (without stopping it first) by setting TAUDnTS.TAUDnTSm to 1 during operation.

Conditions

If the TAUDnCMORm.TAUDnMD0 bit is set to 0, the first interrupt after a start or restart is not generated, and therefore TAUDnTTOUTm does not toggle. This results in an inverted TAUDnTTOUTm signal compared to when TAUDnCMORm.TAUDnMD0 is set to 1. For details refer to **Section 23.9, TAUDnTTOUTm Output and INTTAUDnIm Generation when Counter Starts or Restarts**.

23.12.1.2 Equations

INTTAUDnIm cycle = count clock cycle × (TAUDnCDRm + 1)

TAUDnTTOUTm square wave cycle = count clock cycle × (TAUDnCDRm + 1) × 2

23.12.1.3 Block Diagram and General Timing Diagram

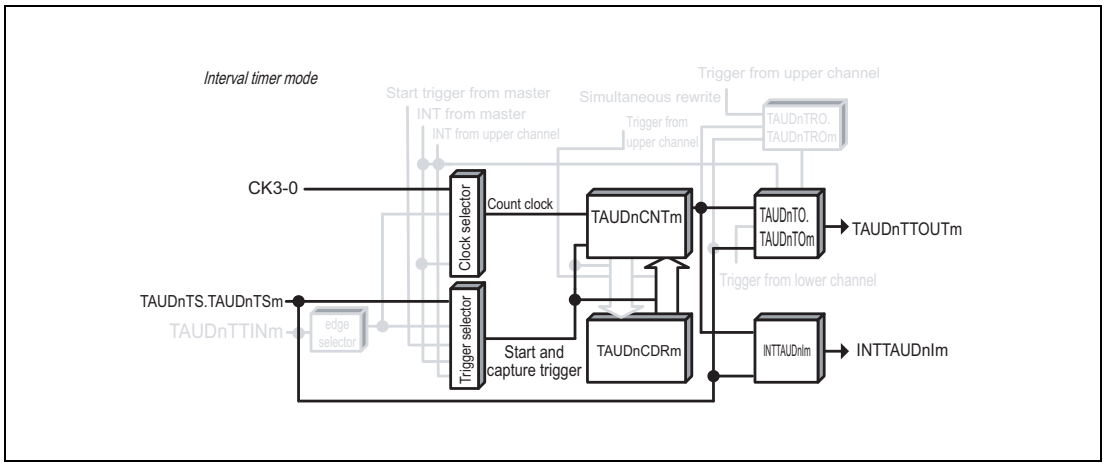

Figure 23.27 Block Diagram of Interval Timer Function

The following settings apply to the general timing diagram.

- INTTAUDnIm is generated at the beginning of operation (TAUDnCMORm.TAUDnMD0 = 1)

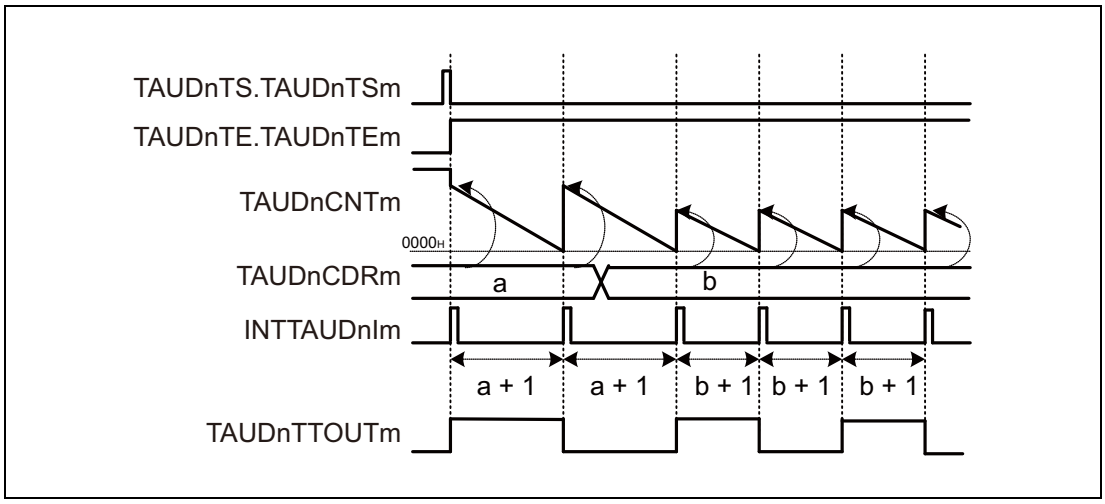

Figure 23.28 General Timing Diagram of Interval Timer Function

23.12.1.4 Register Settings

(1) TAUDnCMORm

Bit	15	14	13	12	11	10	9	8	7	6	5	4	3	2	1	0
	TAUDnCKS [1:0]		TAUDnCCS [1:0]		TAUDn MAS	TAUDnSTS[2:0]			TAUDnCOS [1:0]		—	TAUDnMD[4:1]				TAUDn MD0
Value after reset	0	0	0	0	0	0	0	0	0	0	0	0	0	0	0	0
R/W	R/W	R/W	R/W	R/W	R/W	R/W	R/W	R/W	R/W	R/W	R	R/W	R/W	R/W	R/W	R/W

Table 23.44 Contents of the TAUDnCMORm register for Interval Timer Function

Bit Position	Bit Name	Function
15, 14	TAUDnCKS [1:0]	Operating Clock Selection 00: Prescaler output CK0 01: Prescaler output CK1 10: Prescaler output CK2 11: Prescaler output CK3
13, 12	TAUDnCCS[1:0]	00: Uses an operating clock as a count clock
11	TAUDnMAS	0: Unused. Set to 0.
10 to 8	TAUDnSTS[2:0]	000: Triggers the counter by software.
7, 6	TAUDnCOS[1:0]	00: Unused. Set to 00.
5	Reserved	When read, the value after reset is read. When writing, write the value after reset.
4 to 1	TAUDnMD[4:1]	0000: Interval timer mode
0	TAUDnMD0	0: INTTAUDnIm is not generated to toggle TAUDnTTOUTm at the beginning of an operation. 1: INTTAUDnIm is generated to toggle TAUDnTTOUTm at the beginning of an operation.

(2) TAUDnCMURm

Bit	7	6	5	4	3	2	1	0
	—	—	—	—	—	—	TAUDnTIS[1:0]	
Value after reset	0	0	0	0	0	0	0	0
R/W	R	R	R	R	R	R	R/W	R/W

Table 23.45 Contents of the TAUDnCMURm register for Interval Timer Function

Bit Position	Bit Name	Function
7 to 2	Reserved	When read, the value after reset is read. When writing, write the value after reset.
1, 0	TAUDnTIS[1:0]	00: Unused. Set to 00.

(3) Channel output mode

Table 23.46 Control Bit Settings in Independent Channel Output Mode 1

Bit Name	Setting
TAUDnTOE.TAUDnTOEm	1: Enables independent channel output mode
TAUDnTOM.TAUDnTOMm	0: Independent channel output
TAUDnTOC.TAUDnTOCm	0: Operating mode 1 (Toggle mode if TAUDnTOM.TAUDnTOMm = 0)
TAUDnTOL.TAUDnTOLm	0: The setting is disabled in toggle mode. (the value after reset).
TAUDnTDE.TAUDnTDEm	0: Disables dead time operation
TAUDnTDM.TAUDnTDMm	0: When dead time operation is disabled (TAUDnTDE.TAUDnTDEm = 0), set these bits to 0
TAUDnTDL.TAUDnTDLm	
TAUDnTRE.TAUDnTREm	0: Disables real-time output
TAUDnTRO.TAUDnTROm	0: When real-time output is disabled (TAUDnTRE.TAUDnTREm = 0), set these bits to 0
TAUDnTRC.TAUDnTRCm	
TAUDnTME.TAUDnTMEm	0: Disables modulation

NOTE

The channel output mode can also be set to Channel Output Mode Controlled by Software by setting TAUDnTOE.TAUDnTOEm = 0. TAUDnTTOUTm can then be controlled independently of the interrupts. For details, see **Section 23.7, Channel Output Modes**.

(4) Simultaneous rewrite

The simultaneous rewrite registers (TAUDnRDE, TAUDnRDS, TAUDnRDM, and TAUDnRDC) cannot be used with the interval timer function. Therefore, these registers should be set to 0.

Table 23.47 Simultaneous Rewrite Settings for Interval Timer Function

Bit Name	Setting
TAUDnRDE.TAUDnRDEm	0: Disables simultaneous rewrite
TAUDnRDS.TAUDnRDSm	0: When simultaneous rewrite is disabled (TAUDnRDE.TAUDnRDEm = 0), set these bits to 0
TAUDnRDM.TAUDnRDMm	
TAUDnRDC.TAUDnRDCm	

23.12.1.5 Operating Procedure for Interval Timer Function

Table 23.48 Operating Procedure for Interval Timer Function

	Operation	TAUDn Status
Initial Channel Setting	Set TAUDnCMORm and TAUDnCMURm registers as described in **Table 23.44, Contents of the TAUDnCMORm register for Interval Timer Function**, and **Table 23.45, Contents of the TAUDnCMURm register for Interval Timer Function**. Set the value of TAUDnCDRm register. Set channel output mode by setting the control bits as described in**Table 23.46, Control Bit Settings in Independent Channel Output Mode 1**.	Channel operation is stopped.
Start Operation	Set TAUDnTS.TAUDnTSm to 1. TAUDnTS.TAUDnTSm is a trigger bit, which is automatically cleared to 0.	TAUDnTE.TAUDnTEm is set to 1 and the counter starts. The TAUDnCDRm value is loaded in TAUDnCNTm. When TAUDnCMORm.TAUDnMD0 = 1, INTTAUDnIm is generated and TAUDnTTOUTm toggles.
During Operation	The TAUDnCDRm register value can be changed at any time. The TAUDnCNTm register can be read at all times.	TAUDnCNTm counts down. When the counter reaches 0000_H: • The TAUDnCDRm value is loaded in TAUDnCNTm again and count operation continues. • INTTAUDnIm is generated and TAUDnTTOUTm toggles.
Stop Operation	Set TAUDnTT.TAUDnTTm to 1. TAUDnTT.TAUDnTTm is a trigger bit, which is automatically cleared to 0.	TAUDnTE.TAUDnTEm is cleared to 0 and the counter stops. TAUDnCNTm and TAUDnTTOUTm stop and retain their current values.

Restart

23.12.1.6 Specific Timing Diagrams

(1) TAUDnCDRm = 0000_H, count clock = PCLK/2

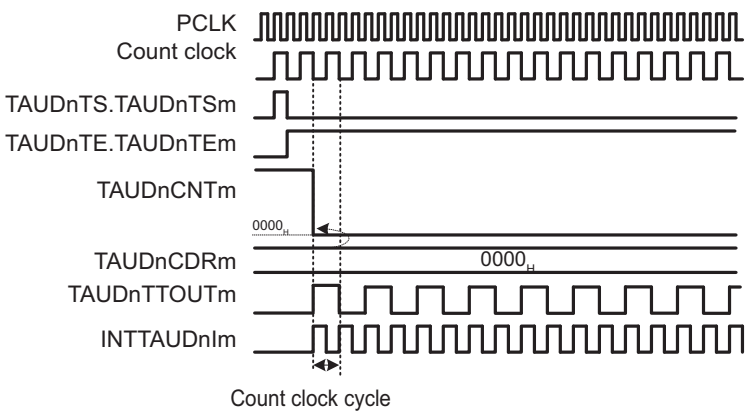

Figure 23.29 TAUDnCDRm = 0000_H, Count Clock = PCLK/2

- If TAUDnCDRm = 0000_H and the count clock = PCLK/2, the TAUDnCDRm value is loaded into TAUDnCNTm every count clock, meaning that TAUDnCNTm is always 0000_H.
- INTTAUDnIm is generated every count clock, resulting in TAUDnTTOUTm toggling every count clock.

(2) TAUDnCDRm = 0000_H, count clock = PCLK

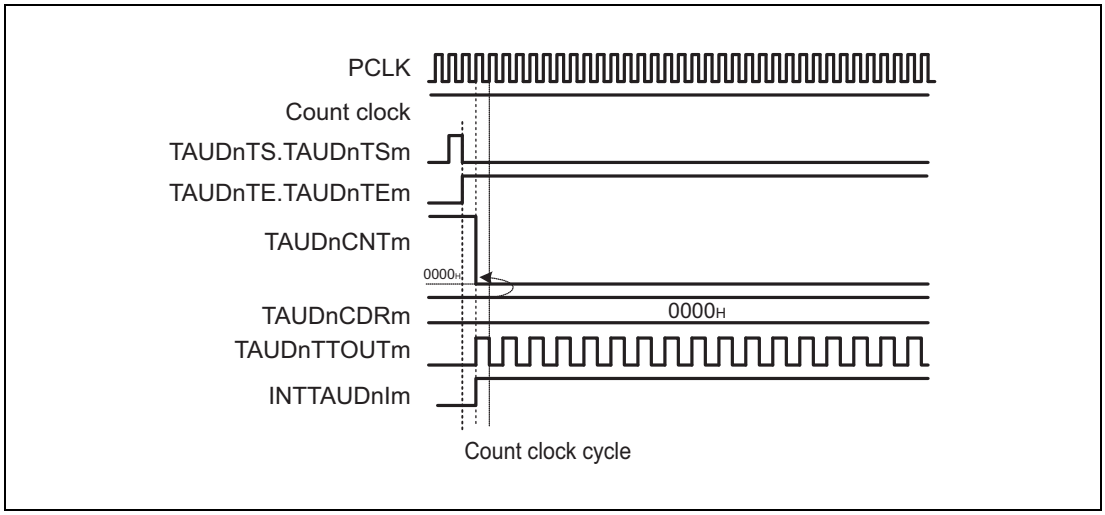

Figure 23.30 TAUDnCDRm = 0000_H, Count Clock = PCLK

- If TAUDnCDRm = 0000_H and the count clock = PCLK, the TAUDnCDRm value is loaded into TAUDnCNTm every PCLK clock, meaning that TAUDnCNTm is always 0000_H.
- INTTAUDnIm is fixed to the high level. Though the first interrupt is generated, subsequent interrupts are not generated. TAUDTTOUTm is toggled every PCLK clock.

NOTE

INTTAUDnIm is fixed to high level.

(3) Operation stop and restart

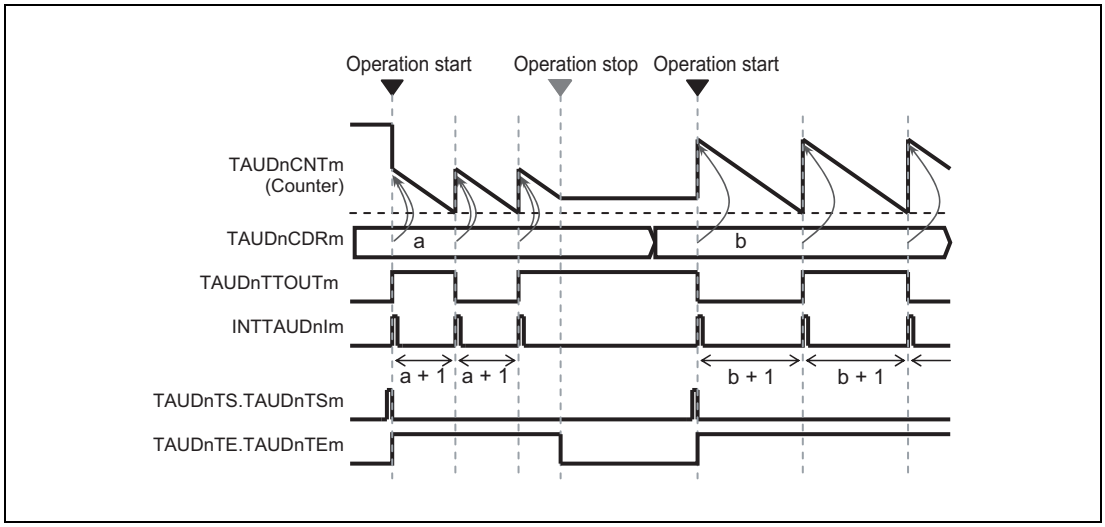

Figure 23.31 Operation Stop and Restart (TAUDnCMORm.TAUDnMD0 = 1)

- The counter can be stopped by setting TAUDnTT.TAUDnTTm to 1. This sets TAUDnTE.TAUDnTEm to 0.
- TAUDnCNTm and TAUDnTTOUTm stop but retain their values.
- The counter can be restarted by setting TAUDnTS.TAUDnTSm to 1.

(4) Forced restart (TAUDnCMORm.TAUDnMD0 = 1)

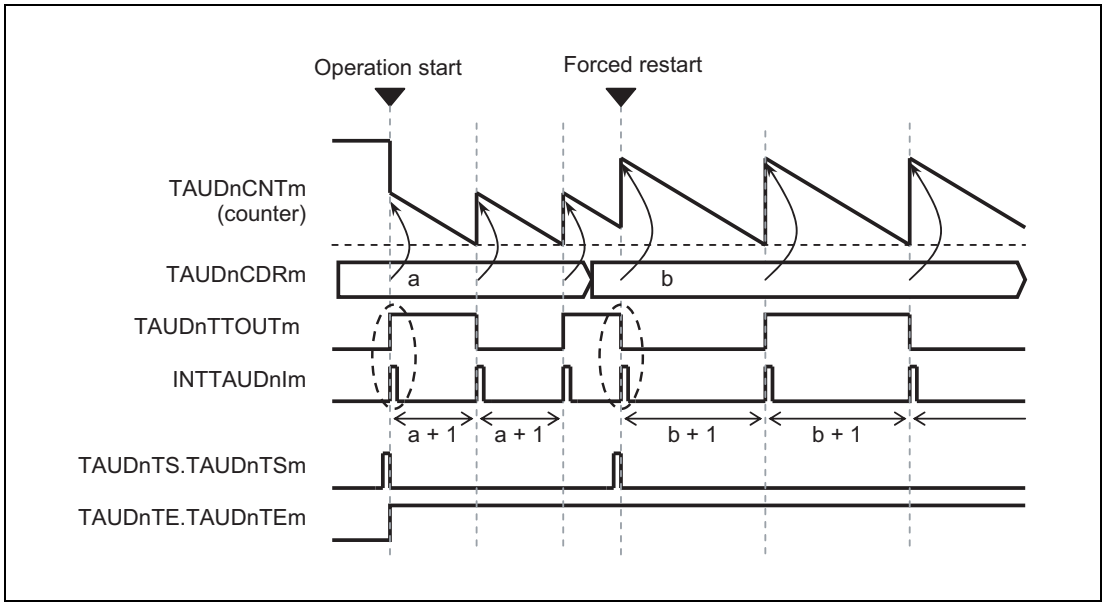

Figure 23.32 Forced Restart Operation (TAUDnCMORm.TAUDnMD0 = 1)

- The counter can be forcibly restarted (without stopping it first) by setting TAUDnTS.TAUDnTSm to 1 during operation.
- If the TAUDnCMORm.TAUDnMD0 bit is set to 1, the first interrupt after a start or restart is generated.
- When the counter is forcibly restarted, the TAUDnCDRm value is reflected in TAUDnCNTm and the counter starts.
  A forced restart causes immediate reflection of changes to the value of TAUDnCDRm.
- When the counter is forcibly restarted, an interrupt (INTTAUDnIm) is generated and TAUDnTOUTm is inverted.

(5) Forced restart (TAUDnCMORm.TAUDnMD0 = 0)

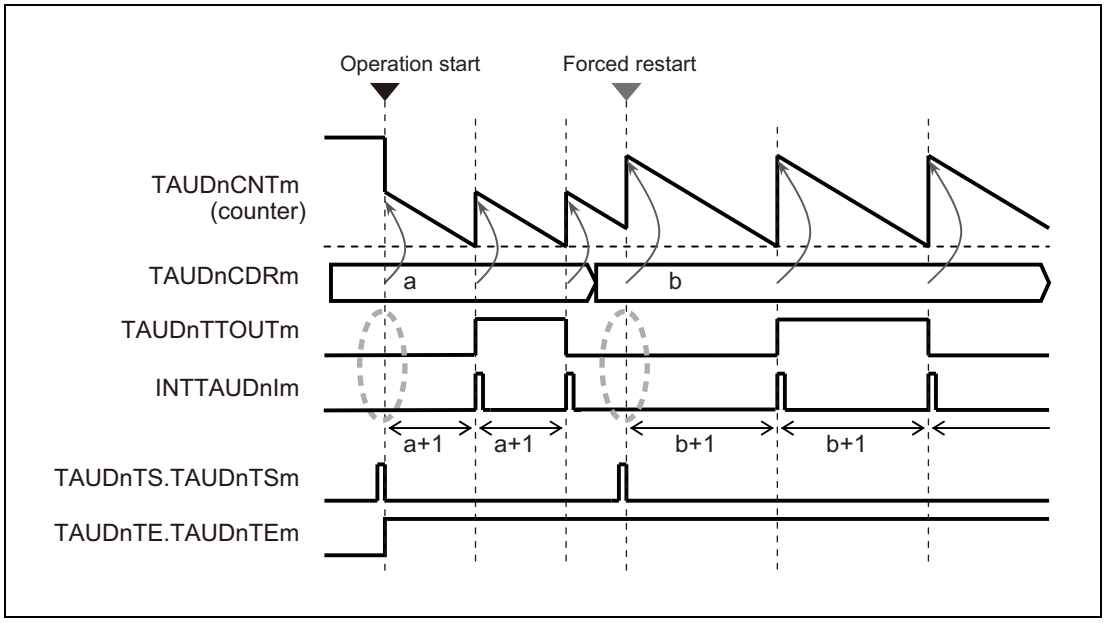

Figure 23.33 Forced Restart Operation (TAUDnCMORm.TAUDnMD0 = 0)

- When the counter is forcibly restarted, an interrupt (INTTAUDnIm) is not generated or TAUDnTOUTm is not inverted.

23.12.2 TAUDnTTINm Input Interval Timer Function

23.12.2.1 Overview

Summary

This function is used as a reference timer for generating timer interrupts (INTTAUDnIm) at regular intervals or when a valid TAUDnTTINm input edge is detected. When an interrupt is generated, the TAUDnTTOUTm signal toggles, resulting in a square wave.

Prerequisites

- The operating mode should be set to interval timer mode. See **Table 23.49, Contents of the TAUDnCMORm register for TAUDnTTINm Input Interval Timer Function**.
- The channel output mode should be set to independent channel output mode 1. See **Section 23.7, Channel Output Modes**.

Functional description

This function operates in an identical manner to the interval timer function (see **Section 23.12.1, Interval Timer Function**) except that this function is restarted by a valid TAUDnTTINm input edge. The type of edge used as a trigger is specified using the TAUDnCMURm.TAUDnTIS[1:0] bits. Either rising edge, falling edge, or rising and falling edge can be selected.

23.12.2.2 Equations

INTTAUDnIm cycle = count clock cycle × (TAUDnCDRm + 1)

TAUDnTTOUTm square wave cycle = count clock cycle × (TAUDnCDRm + 1) × 2

23.12.2.3 Block Diagram and General Timing Diagram

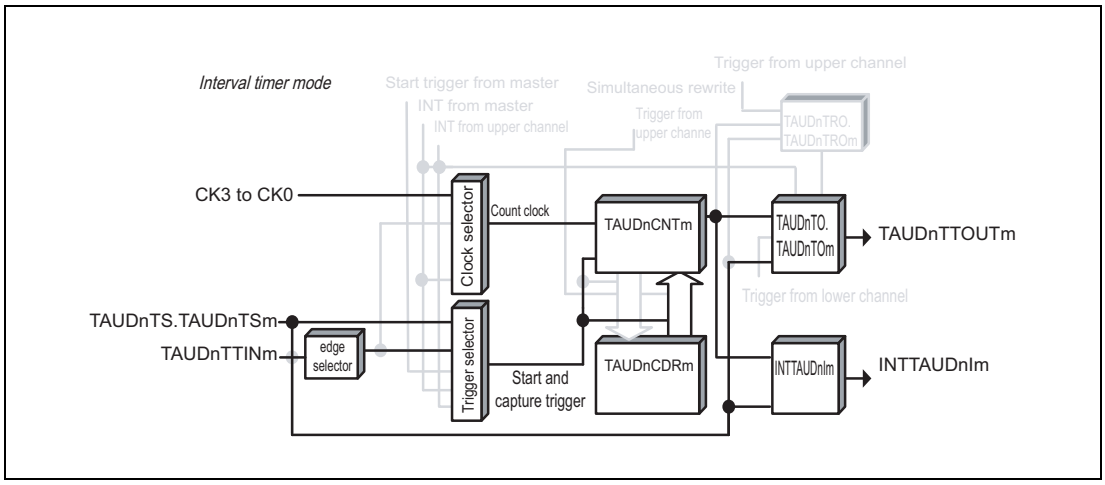

Figure 23.34 Block Diagram of TAUDnTTINm Input Interval Timer Function

The following settings apply to the general timing diagram.

- INTTAUDnIm is generated at the beginning of operation (TAUDnCMORm.TAUDnMD0 = 1)
- Rising edge detection (TAUDnCMURm.TAUDnTIS[1:0] = 01_B)

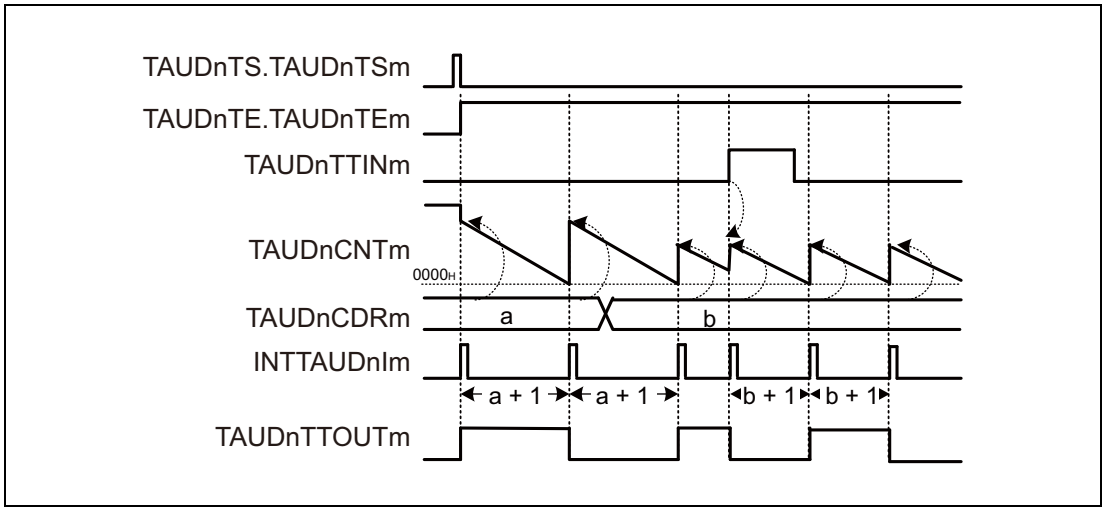

Figure 23.35 General Timing Diagram of TAUDnTTINm Input Interval Timer Function

(1) TAUDnCMORm

Bit	15	14	13	12	11	10	9	8	7	6	5	4	3	2	1	0
	TAUDnCKS [1:0]		TAUDnCCS [1:0]		TAUDn MAS	TAUDnSTS[2:0]			TAUDnCOS [1:0]		—	TAUDnMD[4:1]				TAUDn MD0
Value after reset	0	0	0	0	0	0	0	0	0	0	0	0	0	0	0	0
R/W	R/W	R/W	R/W	R/W	R/W	R/W	R/W	R/W	R/W	R/W	R	R/W	R/W	R/W	R/W	R/W

Table 23.49 Contents of the TAUDnCMORm register for TAUDnTTINm Input Interval Timer Function

Bit Position	Bit Name	Function
15, 14	TAUDnCKS [1:0]	Operating Clock Selection 00: Prescaler output CK0 01: Prescaler output CK1 10: Prescaler output CK2 11: Prescaler output CK3
13, 12	TAUDnCCS[1:0]	00: Uses an operating clock as a count clock
11	TAUDnMAS	0: Unused. Set to 0.
10 to 8	TAUDnSTS[2:0]	001: Valid TAUDnTTINm input edge signal is used as an external start trigger.
7, 6	TAUDnCOS[1:0]	00: Unused. Set to 00.
5	Reserved	When read, the value after reset is read. When writing, write the value after reset.
4 to 1	TAUDnMD[4:1]	0000: Interval timer mode
0	TAUDnMD0	0: INTTAUDnIm is not generated to toggle TAUDnTTOUTm at the beginning of an operation. 1: INTTAUDnIm is generated to toggle TAUDnTTOUTm at the beginning of an operation.

(2) TAUDnCMURm

Bit	7	6	5	4	3	2	1	0
	—	—	—	—	—	—	TAUDnTIS[1:0]	
Value after reset	0	0	0	0	0	0	0	0
R/W	R	R	R	R	R	R	R/W	R/W

Table 23.50 Contents of the TAUDnCMURm register for TAUDnTTINm Input Interval Timer Function

Bit Position	Bit Name	Function
7 to 2	Reserved	When read, the value after reset is read. When writing, write the value after reset.
1, 0	TAUDnTIS[1:0]	00: Detection of falling edge 01: Detection of rising edge 10: Detection of rising and falling edges

(3) Channel output mode

Table 23.51 Control Bit Settings in Independent Channel Output Mode 1

Bit Name	Setting
TAUDnTOE.TAUDnTOEm	1: Enables independent channel output mode
TAUDnTOM.TAUDnTOMm	0: Independent channel output
TAUDnTOC.TAUDnTOCm	0: Operating mode 1 (Toggle mode if TAUDnTOM.TAUDnTOMm = 0)
TAUDnTOL.TAUDnTOLm	0: The setting is disabled in toggle mode. (the value after reset).
TAUDnTDE.TAUDnTDEm	0: Disables dead time operation
TAUDnTDM.TAUDnTDMm	0: When dead time operation is disabled (TAUDnTDE.TAUDnTDEm = 0), set these bits to 0
TAUDnTDL.TAUDnTDLm	
TAUDnTRE.TAUDnTREm	0: Disables real-time output
TAUDnTRO.TAUDnTROm	0: When real-time output is disabled (TAUDnTRE.TAUDnTREm = 0), set these bits to 0
TAUDnTRC.TAUDnTRCm	
TAUDnTME.TAUDnTMEm	0: Disables modulation

NOTE

The channel output mode can also be set to Channel Output Mode Controlled by Software by setting TAUDnTOE.TAUDnTOEm = 0. TAUDnTTOUTm can then be controlled independently of the interrupts. For details, see **Section 23.7, Channel Output Modes**.

(4) Simultaneous rewrite

The simultaneous rewrite registers (TAUDnRDE, TAUDnRDS, TAUDnRDM, and TAUDnRDC) cannot be used with the TAUDnTTINm Input Interval Timer Function. Therefore, these registers should be set to 0.

Table 23.52 Simultaneous Rewrite Settings for TAUDnTTINm Input Interval Timer Function

Bit Name	Setting
TAUDnRDE.TAUDnRDEm	0: Disables simultaneous rewrite
TAUDnRDS.TAUDnRDSm	0: When simultaneous rewrite is disabled (TAUDnRDE.TAUDnRDEm = 0), set these bits to 0
TAUDnRDM.TAUDnRDMm	
TAUDnRDC.TAUDnRDCm	

23.12.2.4 Operating Procedure for TAUDnTTINm Input Interval Timer Function

Table 23.53 Operating Procedure for TAUDnTTINm Input Interval Timer Function

	Operation	TAUDn Status
Initial Channel Setting	Set TAUDnCMORm and TAUDnCMURm registers as described in **Table 23.49, Contents of the TAUDnCMORm register for TAUDnTTINm Input Interval Timer Function**, and **Table 23.50, Contents of the TAUDnCMURm register for TAUDnTTINm Input Interval Timer Function**. Set the value of TAUDnCDRm register. Set channel output mode by setting the control bits as described in **Table 23.51, Control Bit Settings in Independent Channel Output Mode 1**.	Channel operation is stopped.
Start Operation	Set TAUDnTS.TAUDnTSm to 1. TAUDnTS.TAUDnTSm is a trigger bit, which is automatically cleared to 0.	TAUDnTE.TAUDnTEm is set to 1 and the counter starts. The TAUDnCDRm value is loaded in TAUDnCNTm. When TAUDnCMORm.TAUDnMD0 = 1, INTTAUDnIm is generated and TAUDnTTOUTm toggles.
During Operation	The values of the TAUDnCMURm.TAUDnTIS[1:0] and the TAUDnCDRm register are changeable at any time. The TAUDnCNTm register can be read at all times. Detection of TAUDnTTINm edge	TAUDnCNTm counts down. When the counter reaches 0000_H: • The TAUDnCDRm value is loaded in TAUDnCNTm again and count operation continues. • INTTAUDnIm is generated and TAUDnTTOUTm toggles. When a TAUDnTTINm input valid edge is detected during count operation, the TAUDnCDRm value is loaded in TAUDnCNTm and count operation continues. Afterwards, this procedure is repeated.
Stop Operation	Set TAUDnTT.TAUDnTTm to 1. TAUDnTT.TAUDnTTm is a trigger bit, which is automatically cleared to 0.	TAUDnTE.TAUDnTEm is cleared to 0 and the counter stops. TAUDnCNTm and TAUDnTTOUTm stop and retain their current values.

Restart

23.12.2.5 Specific Timing Diagrams

The timing diagrams in **Section 23.12.1, Interval Timer Function** apply, and in addition, the counter can also be restarted by a valid TAUDnTTINm input edge without using this function.

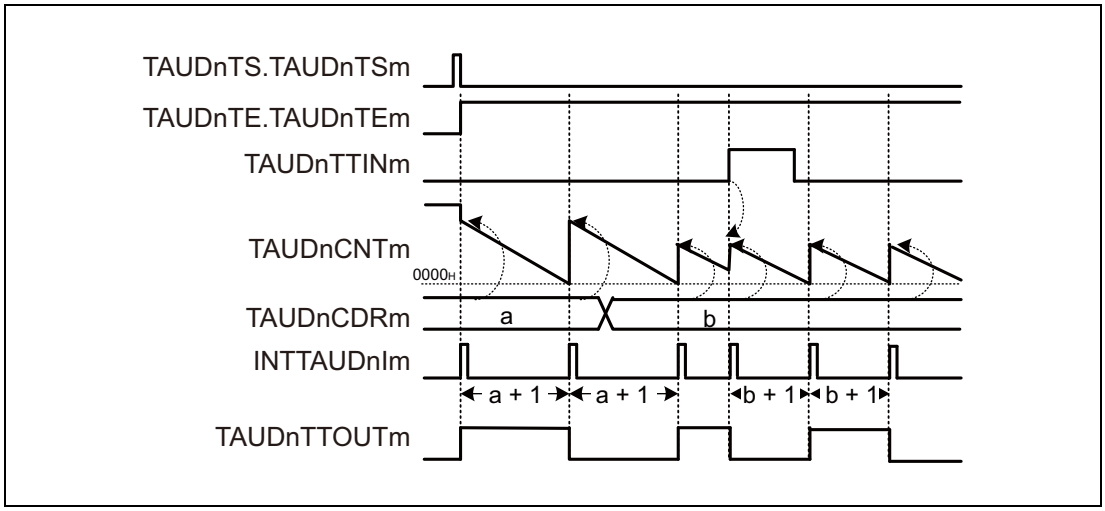

Figure 23.36 Counter Triggered by Rising TAUDnTTINm Input Edge (TAUDnCMURm.TAUDnTIS[1:0] = 01_B), TAUDnCMORm.TAUDnMD0 = 1

- If a valid TAUDnTTINm input edge is detected, an interrupt is generated which causes TAUDnTTOUTm to toggle. In this example, the valid edge is a rising edge (TAUDnCMURm.TAUDnTIS[1:0] = 01_B).

23.12.3 Clock Divider Function

23.12.3.1 Overview

Summary

This function is used as a frequency divider. The frequency of the input signal TAUDnTTINm is divided by a factor related to TAUDnCDRm, and the resulting signal is output to TAUDnTTOUTm.

Prerequisites

- TAUDnTTINm should have a fixed frequency.
- The operating mode should be set to interval timer mode. (See **Table 23.54, Contents of the TAUDnCMORm register for Clock Divider Function**.)
- The channel output mode should be set to independent channel output mode 1. (See **Section 23.7, Channel Output Modes**.)

Functional description

The counter is started by setting the channel trigger bit (TAUDnTS.TAUDnTSm) to 1. This in turn sets TAUDnTE.TAUDnTEm = 1, enabling count operation. The current value of TAUDnCDRm is loaded into TAUDnCNTm and the counter starts to count down from this value, using TAUDnTTINm as a count clock.

When the counter value reaches 0000_H, INTTAUDnIm occurs and TAUDnTTOUTm signal is toggled. Then, TAUDnCDRm value is loaded into TAUDnCNTm to continue operation subsequently.

The value of TAUDnCDRm can be rewritten at any time. The changed value of TAUDnCDRm is applied when the counter starts to count down next time.

The counter can be stopped by setting TAUDnTT.TAUDnTTm = 1. This sets TAUDnTE.TAUDnTEm = 0. TAUDnCNTm and TAUDnTTOUTm stop but retain their values. The function can be restarted by setting TAUDnTS.TAUDnTSm = 1. The counter can also be forcibly restarted without making a stop by setting TAUDnTS.TAUDnTSm = 1 during operation (forced restart).

Conditions

If the TAUDnCMORm.TAUDnMD0 bit is set to 0, the first interrupt after a start or restart is not generated, and therefore TAUDnTTOUTm does not toggle. This results in an inverted TAUDnTTOUTm signal compared to when TAUDnCMORm.TAUDnMD0 is set to 1. For details, see **Section 23.9, TAUDnTTOUTm Output and INTTAUDnIm Generation when Counter Starts or Restarts**.

NOTE

TAUDnTTINm input signals are sampled at the frequency of the operating clock set by TAUDnCMORm.TAUDnCKS[1:0] bits. Therefore, the TAUDnTTOUTm output clock cycle has an error of ±1 operating clock cycle.

23.12.3.2 Equations

- When rising edge detection is selected:
  TAUDnTTOUTm frequency = TAUDnTTINm frequency / [(TAUDnCDRm + 1) × 2]
- When falling edge detection is selected:
  TAUDnTTOUTm frequency = TAUDnTTINm frequency / [(TAUDnCDRm + 1) × 2]
- When falling and rising edge detection is selected:
  TAUDnTTOUTm frequency = TAUDnTTINm frequency / (TAUDnCDRm + 1)

23.12.3.3 Block Diagram and General Timing Diagram

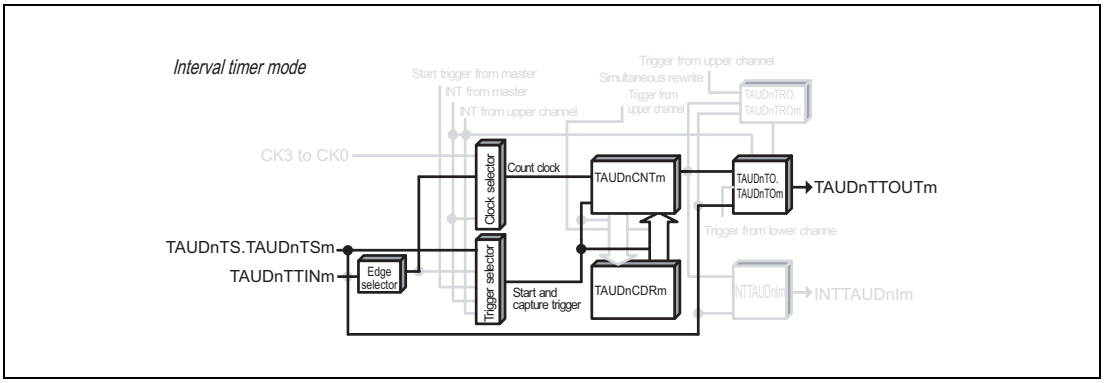

Figure 23.37 Block Diagram of Clock Divider Function

The following settings apply to the general timing diagram.

- INTTAUDnIm generated at the beginning of operation. (TAUDnCMORm.TAUDnMD0 = 1)
- Detection of rising edge (TAUDnCMURm.TAUDnTIS[1:0] = 01_B)

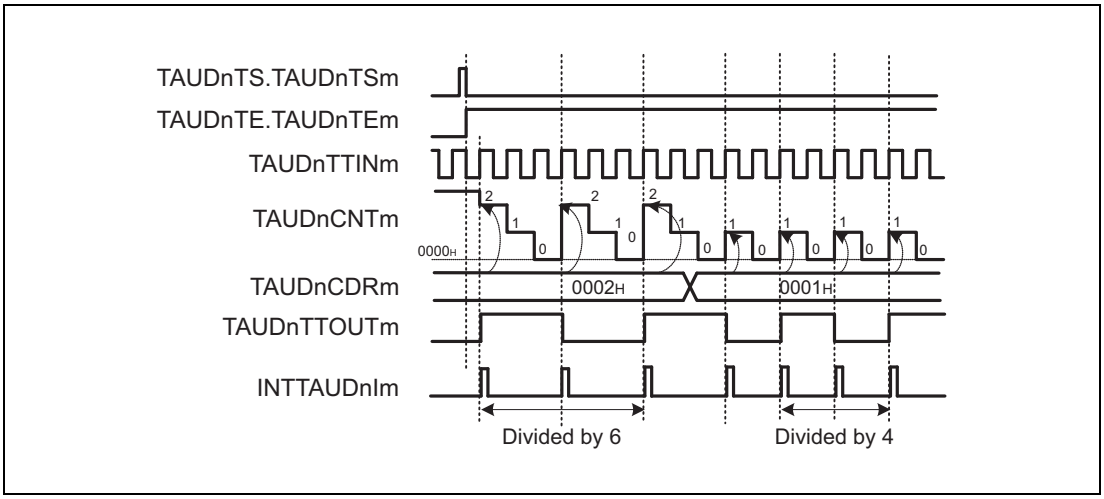

Figure 23.38 General Timing Diagram of Clock Divider Function

23.12.3.4 Register Settings

(1) TAUDnCMORm

Bit	15	14	13	12	11	10	9	8	7	6	5	4	3	2	1	0
	TAUDnCKS [1:0]		TAUDnCCS [1:0]		TAUDn MAS	TAUDnSTS[2:0]			TAUDnCOS [1:0]		—	TAUDnMD[4:1]				TAUDn MD0
Value after reset	0	0	0	0	0	0	0	0	0	0	0	0	0	0	0	0
R/W	R/W	R/W	R/W	R/W	R/W	R/W	R/W	R/W	R/W	R/W	R	R/W	R/W	R/W	R/W	R/W

Table 23.54 Contents of the TAUDnCMORm register for Clock Divider Function

Bit Position	Bit Name	Function
15, 14	TAUDnCKS[1:0]	Operating Clock Selection 00: Prescaler output CK0 01: Prescaler output CK1 10: Prescaler output CK2 11: Prescaler output CK3
13, 12	TAUDnCCS[1:0]	01: Valid TAUDnTTINm input edge is used as a count clock.
11	TAUDnMAS	0: Unused. Set to 0.
10 to 8	TAUDnSTS[2:0]	000: Trigger the counter using software.
7, 6	TAUDnCOS[1:0]	00: Unused. Set to 00.
5	Reserved	When read, the value after reset is read. When writing, write the value after reset.
4 to 1	TAUDnMD[4:1]	0000: Interval timer mode
0	TAUDnMD0	0: INTTAUDnIm is not generated to toggle TAUDnTTOUTm at the beginning of an operation. 1: INTTAUDnIm is generated and TAUDnTTOUTm is toggled at the beginning of operation.

(2) TAUDnCMURm

Bit	7	6	5	4	3	2	1	0
	—	—	—	—	—	—	TAUDnTIS[1:0]	
Value after reset	0	0	0	0	0	0	0	0
R/W	R	R	R	R	R	R	R/W	R/W

Table 23.55 Contents of the TAUDnCMURm register for Clock Divider Function

Bit Position	Bit Name	Function
7 to 2	Reserved	When read, the value after reset is read. When writing, write the value after reset.
1, 0	TAUDnTIS[1:0]	00: Detection of falling edge 01: Detection of rising edge 10: Detection of rising and falling edges

(3) Channel output mode

Table 23.56 Control Bit Settings in Independent Channel Output Mode 1

Bit Name	Setting
TAUDnTOE.TAUDnTOEm	1: Enables independent channel output mode
TAUDnTOM.TAUDnTOMm	0: Independent channel output
TAUDnTOC.TAUDnTOCm	0: Operating mode 1 (Toggle mode if TAUDnTOM.TAUDnTOMm = 0)
TAUDnTOL.TAUDnTOLm	0: The setting is disabled in toggle mode. (the value after reset).
TAUDnTDE.TAUDnTDEm	0: Disables dead time operation
TAUDnTDM.TAUDnTDMm	0: When dead time operation is disabled (TAUDnTDE.TAUDnTDEm = 0), set these bits to 0
TAUDnTDL.TAUDnTDLm	
TAUDnTRE.TAUDnTREm	0: Disables real-time output
TAUDnTRO.TAUDnTROm	0: When real-time output is disabled (TAUDnTRE.TAUDnTREm = 0), set these bits to 0
TAUDnTRC.TAUDnTRCm	
TAUDnTME.TAUDnTMEm	0: Disables modulation

(4) Simultaneous rewrite

Simultaneous rewrite registers (TAUDnRDE, TAUDnRDS, TAUDnRDM, and TAUDnRDC) cannot be used with this function. Therefore, these registers should be set to 0.

Table 23.57 Simultaneous Rewrite Settings for Clock Divider Function

Bit Name	Setting
TAUDnRDE.TAUDnRDEm	0: Disables simultaneous rewrite
TAUDnRDS.TAUDnRDSm	0: When simultaneous rewrite is disabled (TAUDnRDE.TAUDnRDEm = 0), set these bits to 0
TAUDnRDM.TAUDnRDMm	
TAUDnRDC.TAUDnRDCm	

23.12.3.5 Operating Procedure for Clock Divider Function

Table 23.58 Operating Procedure for Clock Divider Function

	Operation	TAUDn Status
Initial Channel Setting	Set TAUDnCMORm and TAUDnCMURm registers as described in **Table 23.54, Contents of the TAUDnCMORm register for Clock Divider Function**, and **Table 23.55, Contents of the TAUDnCMURm register for Clock Divider Function**. Set the value of TAUDnCDRm register. Set channel output mode by setting the control bits as described in **Table 23.56, Control Bit Settings in Independent Channel Output Mode 1**.	Channel operation is stopped.
Start Operation	Set TAUDnTS.TAUDnTSm to 1. TAUDnTS.TAUDnTSm is a trigger bit, which is automatically cleared to 0.	TAUDnTE.TAUDnTEm is set to 1 and the counter starts. TAUDnCNTm loads TAUDnCDRm value. If TAUDnCMORm.TAUDnMD0 is set to 1, INTTAUDnIm occurs and TAUDnTTOUTm is toggled.
During Operation	The value of TAUDnCDRm is changeable at any time. The TAUDnCNTm register can be read at all times.	TAUDnCNTm counts down each time TAUDnTTINm input edge is detected. When the counter reaches 0000_H: • TAUDnCDRm value is loaded in TAUDnCNTm and count operation continues. • INTTAUDnIm is generated. • TAUDnTTOUTm is toggled. Afterwards, this procedure is repeated.
Stop Operation	Set TAUDnTT.TAUDnTTm to 1. TAUDnTT.TAUDnTTm is a trigger bit, which is automatically cleared to 0.	TAUDnTE.TAUDnTEm is cleared to 0 and the counter stops. TAUDnCNTm stops. TAUDnCNTm and TAUDnTTOUTm retain their current values.

Restart

23.12.3.6 Specific Timing Diagrams

(1) TAUDnCDRm = 0000_H

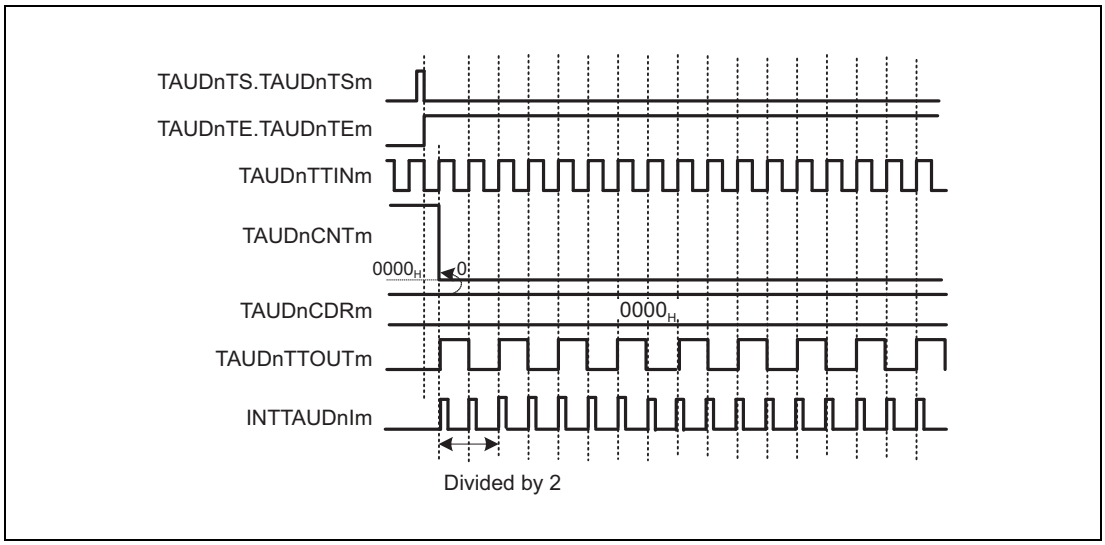

Figure 23.39 TAUDnCDRm = 0000_H, TAUDnCMORm.TAUDnMD0 = 1, TAUDnCMURm.TAUDnTIS[1:0] = 01_B

- If TAUDnCDRm is 0000_H, TAUDnCNTm is always 0000_H.
- INTTAUDnIm is generated every count clock, resulting in TAUDnTTOUTm toggling every count clock

Figure 23.39 shows an operation timing example. Actually, there is a delay from TINm detection until TOUTm output because of the delay time of a noise filter or synchronization circuit placed between the TAUDnIm pin and TAUDn.

(2) Restart

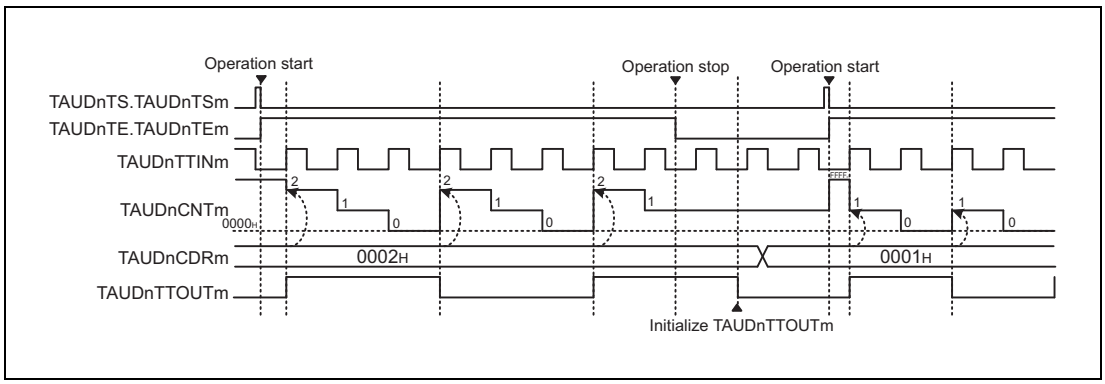

Figure 23.40 Restart (TAUDnCMORm.TAUDnMD0 = 1, TAUDnCMURm.TAUDnTIS[1:0] = 01_B)

To reset the value of TAUDnTTOUTm:

- Set TAUDnTOE.TAUDnTOEm = 0 when the counter is stopped (TAUDnTE.TAUDnTEm = 0).
- Then, write either 0 or 1 to TAUDnTO.TAUDnTOm to set the new start value of TAUDnTTOUTm.

(3) Forced restart

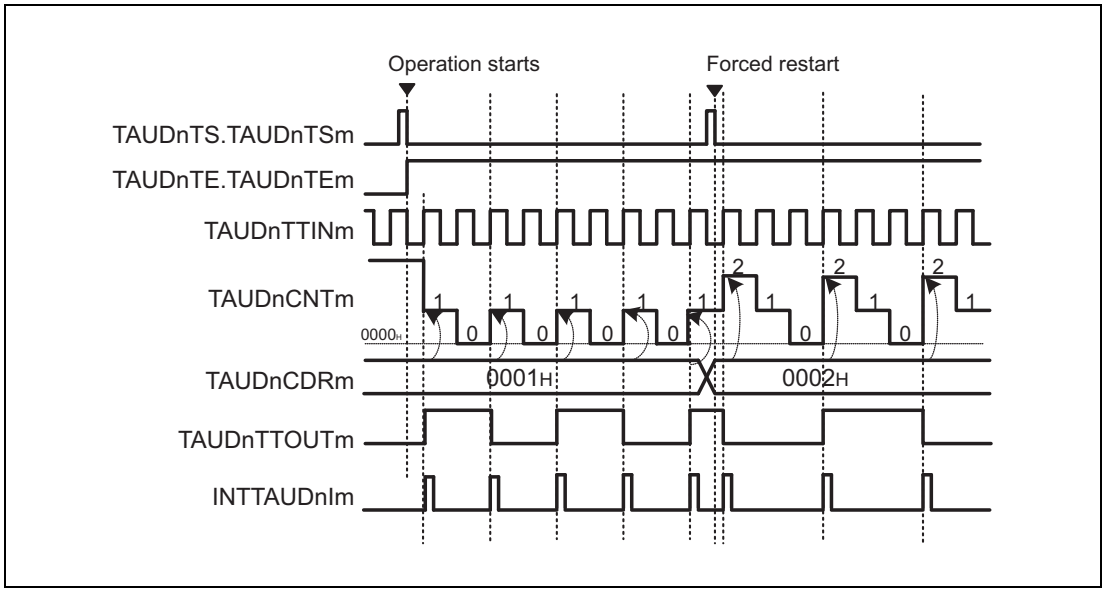

Figure 23.41 Forced Restart Operation (TAUDnCMORm.TAUDnMD0 = 1, TAUDnCMURm.TAUDnTIS[1:0] = 01_B)

- The counter can be forcibly restarted (without stopping it first) by setting TAUDnTS.TAUDnTSm = 1 during operation.
- The value of TAUDnCDRm is written to TAUDnCNTm and the count operation restarts.
- TAUDnTTOUTm restarts at the same level as before the forced restart.

23.12.4 External Event Count Function

23.12.4.1 Overview

Summary

This function is used as an event timer, which generates an interrupt (INTTAUDnIm) when a specific number of TAUDnTTINm input valid edge has been detected.

Prerequisites

- The operating mode should be set to the event count mode. (See **Table 23.59, Contents of the TAUDnCMORm register for External Event Count Function**.)
- TAUDnTTOUTm is not used with this function.

Functional description

The counter is enabled by setting the channel trigger bit (TAUDnTS.TAUDnTSm) to 1. This in turn sets TAUDnTE.TAUDnTEm = 1, enabling count operation. When the counter starts, the current value of TAUDnCDRm is loaded into TAUDnCNTm.

When a valid TAUDnTTINm input edge is detected, the value of TAUDnCNTm decrements by 1. TAUDnCNTm retains this value until a valid TAUDnTTINm input edge is detected or the counter is restarted.

When the valid edge is detected for the (TAUDnCDRm + 1) times, INTTAUDnIm is generated. Then, TAUDnCDRm value is loaded into TAUDnCNTm to continue operation subsequently.

The counter can be stopped by setting TAUDnTT.TAUDnTTm to 1. This sets TAUDnTE.TAUDnTEm to 0. The counter can be restarted by setting TAUDnTS.TAUDnTSm to 1. The counter can also be restarted without stopping it first (forced restart) by setting TAUDnTS.TAUDnTSm to 1 during operation.

The value of TAUDnCDRm can be rewritten at any time, and the changed value of TAUDnCDRm is applied the next time the counter starts to count down.

Conditions

An edge type used as a trigger is specified by TAUDnCMURm.TAUDnTIS[1:0] bits.

- When TAUDnCMURm.TAUDnTIS[1:0] = 00_B, falling edges are counted.
- When TAUDnCMURm.TAUDnTIS[1:0] = 01_B, rising edges are counted.
- When TAUDnCMURm.TAUDnTIS[1:0] = 10_B, both edges are counted.

23.12.4.2 Equations

Number of valid edges detected before INTTAUDnIm generation = TAUDnCDRm + 1

23.12.4.3 Block Diagram and General Timing Diagram

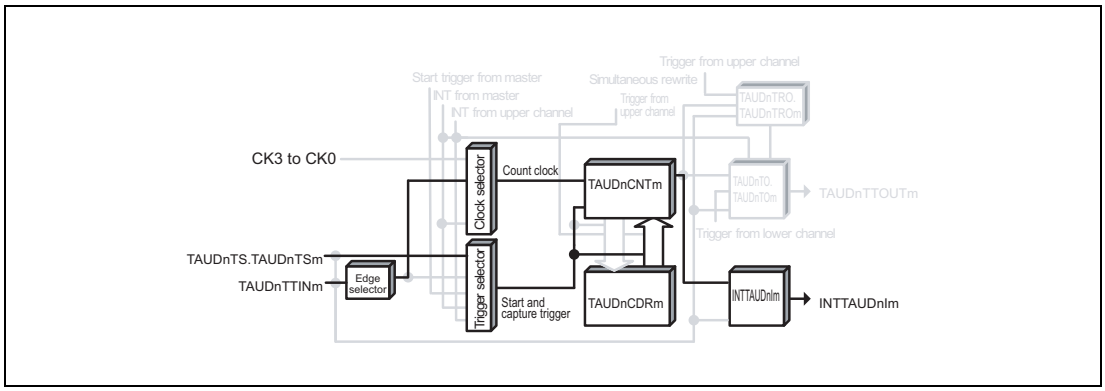

Figure 23.42 Block Diagram of External Event Count Function

The following settings apply to the general timing diagram.

- Detection of rising edge (TAUDnCMURm.TAUDnTIS[1:0] = 01_B)

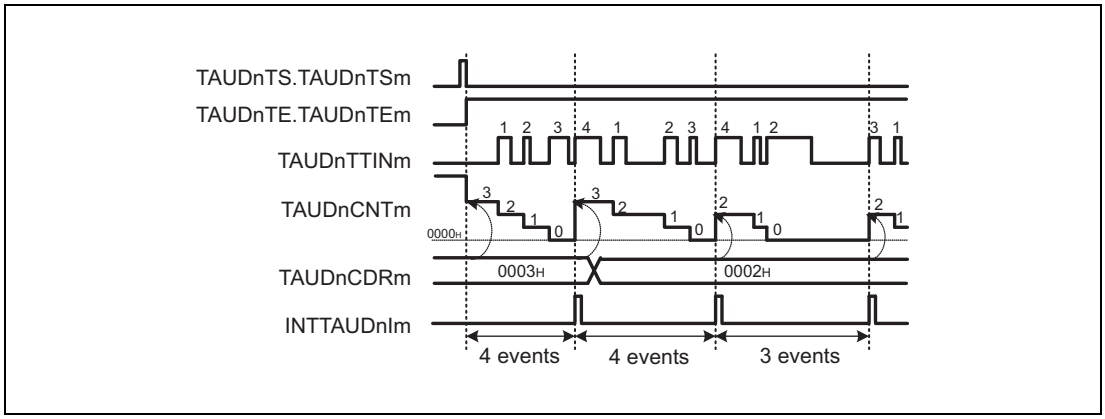

Figure 23.43 General Timing Diagram of External Event Count Function

23.12.4.4 Register Settings

(1) TAUDnCMORm

Bit	15	14	13	12	11	10	9	8	7	6	5	4	3	2	1	0
	TAUDnCKS [1:0]		TAUDnCCS [1:0]		TAUDn MAS	TAUDnSTS[2:0]			TAUDnCOS [1:0]		—	TAUDnMD[4:1]				TAUDn MD0
Value after reset	0	0	0	0	0	0	0	0	0	0	0	0	0	0	0	0
R/W	R/W	R/W	R/W	R/W	R/W	R/W	R/W	R/W	R/W	R/W	R	R/W	R/W	R/W	R/W	R/W

Table 23.59 Contents of the TAUDnCMORm register for External Event Count Function

Bit Position	Bit Name	Function
15, 14	TAUDnCKS[1:0]	Operating Clock Selection 00: Prescaler output CK0 01: Prescaler output CK1 10: Prescaler output CK2 11: Prescaler output CK3
13, 12	TAUDnCCS[1:0]	01: Valid TAUDnTTINm input edge is used as a count clock.
11	TAUDnMAS	0: Unused. Set to 0.
10 to 8	TAUDnSTS[2:0]	000: Trigger the counter using software.
7, 6	TAUDnCOS[1:0]	00: Unused. Set to 00.
5	Reserved	When read, the value after reset is read. When writing, write the value after reset.
4 to 1	TAUDnMD[4:1]	0011: Event count mode
0	TAUDnMD0	0: INTTAUDnIm not generated at the beginning of operation.

(2) TAUDnCMURm

Bit	7	6	5	4	3	2	1	0
	—	—	—	—	—	—	TAUDnTIS[1:0]	
Value after reset	0	0	0	0	0	0	0	0
R/W	R	R	R	R	R	R	R/W	R/W

Table 23.60 Contents of the TAUDnCMURm register for External Event Count Function

Bit Position	Bit Name	Function
7 to 2	Reserved	When read, the value after reset is read. When writing, write the value after reset.
1, 0	TAUDnTIS[1:0]	00: Detection of falling edge 01: Detection of rising edge 10: Detection of falling and rising edges

(3) Channel output mode

The channel output mode is not used by this function.

(4) Simultaneous rewrite

Simultaneous rewrite registers (TAUDnRDE, TAUDnRDS, TAUDnRDM, and TAUDnRDC) cannot be used with this function. Therefore, these registers should be set to 0.

Table 23.61 Simultaneous Rewrite Settings for External Event Count Function

Bit Name	Setting
TAUDnRDE.TAUDnRDEm	0: Disables simultaneous rewrite
TAUDnRDS.TAUDnRDSm	0: When simultaneous rewrite is disabled (TAUDnRDE.TAUDnRDEm = 0), set these bits to 0
TAUDnRDM.TAUDnRDMm	
TAUDnRDC.TAUDnRDCm	

23.12.4.5 Operating Procedure for External Event Count Function

Table 23.62 Operating Procedure for External Event Count Function

	Operation	TAUDn Status
Initial Channel Setting	Set TAUDnCMORm and TAUDnCMURm registers as described in **Table 23.59, Contents of the TAUDnCMORm register for External Event Count Function**, and **Table 23.60, Contents of the TAUDnCMURm register for External Event Count Function**. Set the value of TAUDnCDRm register.	Channel operation is stopped.
Start Operation	Set TAUDnTS.TAUDnTSm to 1. TAUDnTS.TAUDnTSm is a trigger bit, which is automatically cleared to 0.	TAUDnTE.TAUDnTEm is set to 1 and the counter starts. TAUDnCNTm loads TAUDnCDRm value and waits for TAUDnTTINm input edge detection.
During Operation	Detection of TAUDnTTINm edge The value of TAUDnCDRm is changeable at any time. The TAUDnCNTm register can be read at any time.	TAUDnCNTm counts down each time TAUDnTTINm input edge is detected. When an effective edge is detected (TAUDnCDRm + 1) times: • TAUDnCDRm value is loaded in TAUDnCNTm and count operation continues. • INTTAUDnIm is generated. Afterwards, this procedure is repeated.
Stop Operation	Set TAUDnTT.TAUDnTTm to 1. TAUDnTT.TAUDnTTm is a trigger bit, which is automatically cleared to 0.	TAUDnTE.TAUDnTEm is cleared to 0 and the counter stops. TAUDnCNTm stops and retains its current value.

Restart

23.12.4.6 Specific Timing Diagrams

(1) TAUDnCDRm = 0000_H

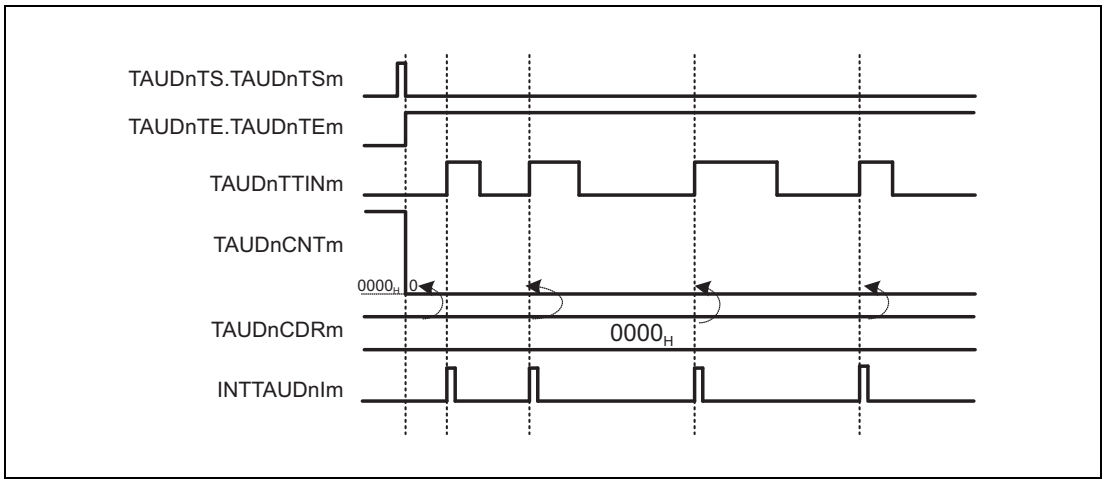

Figure 23.44 TAUDnCDRm = 0000_H, TAUDnCMURm.TAUDnTIS[1:0] = 01_B

- If 0000_H = TAUDnCDRm, 0000_H is loaded into TAUDnCNTm each time a valid TAUDnTTINm input edge is detected.
  In other words, INTTAUDnIm occurs each time a valid TAUDnTTINm input edge is detected.

(2) Operation stop and restart

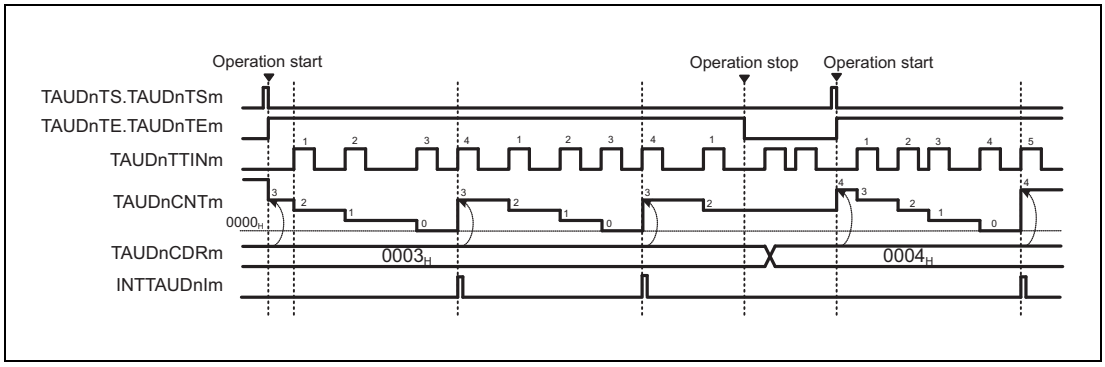

Figure 23.45 Operation Stop and Restart (TAUDnCMURm.TAUDnTIS[1:0] = 01_B)

- The counter can be stopped by setting TAUDnTT.TAUDnTTm to 1. This sets TAUDnTE.TAUDnTEm to 0.
- TAUDnCNTm stops and retains its current value. TAUDnTTINm continues and TAUDnCNTm ignores the valid edge.
- The counter can be restarted by setting TAUDnTS.TAUDnTSm to 1. TAUDnCNTm loads the TAUDnCDRm value and restarts count operation.

(3) Forced restart

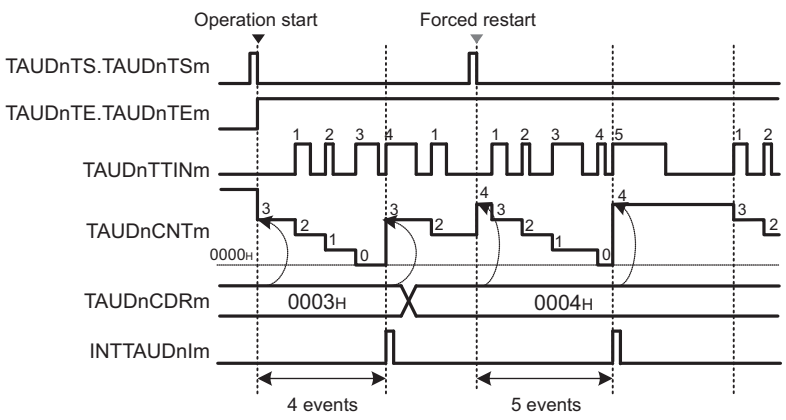

Figure 23.46 Forced Restart Operation (TAUDnCMURm.TAUDnTIS[1:0] = 01_B)

Once a forced restart is made, the changed TAUDnCDRm value is applied to TAUDnCNTm.

- The counter can be restarted without making a stop by setting TAUDnTS.TAUDnTSm to 1 during operation.
- The value of TAUDnCDRm is loaded into TAUDnCNTm and the counter awaits the next valid TAUDnTTINm input edge.

23.12.5 Delay Count Function

23.12.5.1 Overview

Summary

This function generates interrupts (INTTAUDnIm), which have a defined delay to the TAUDnTTINm input signal. TAUDnTTINm input signal pulses that occur within the delay period are ignored.

Prerequisites

- The operating mode should be set to one-count mode. See **Table 23.63, Contents of the TAUDnCMORm register for Delay Count Function**.
- TAUDnTTOUTm is not used with this function.
- Start trigger detection should be disabled during counting (TAUDnCMORm.TAUDnMD0 = 0).

Functional description

The counter is enabled by setting the channel trigger bit (TAUDnTS.TAUDnTSm) to 1. This sets TAUDnTE.TAUDnTEm = 1, enabling count operation.

The counter starts when a valid TAUDnTTINm input start edge is detected. The value of TAUDnCDRm is loaded into TAUDnCNTm and the counter starts to count down from the TAUDnCDRm value.

When the counter reaches 0000_H, an interrupt is generated. The counter returns to $FFFF_H$ and awaits the next valid TAUDnTTINm input edge.

When the counter is counting down, further TAUDnTTINm input signals are ignored, i.e., the counter does not reset.

The value of TAUDnCDRm can be rewritten at any time, and the changed value of TAUDnCDRm is applied the next time the counter starts to count down.

Conditions

The type of edge used as a trigger is specified by the TAUDnCMURm.TIS[1:0] bits:

- If TAUDnCMURm.TAUDnTIS[1:0] = 00_B, falling edges trigger the counter.
- If TAUDnCMURm.TAUDnTIS[1:0] = 01_B, rising edges trigger the counter.
- If TAUDnCMURm.TAUDnTIS[1:0] = 10_B, rising and falling edges trigger the counter.

23.12.5.2 Equations

Delay between TAUDnTTINm and INTTAUDnIm = count clock cycle × (TAUDnCDRm + 1)

23.12.5.3 Block Diagram and General Timing Diagram

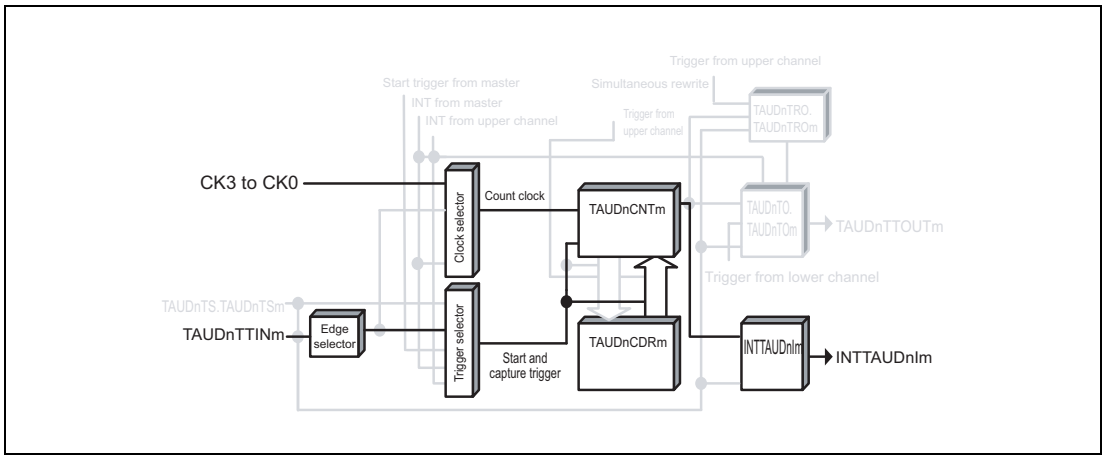

Figure 23.47 Block Diagram of Delay Count Function

The following settings apply to the general timing diagram.

- Detection of falling edge (TAUDnCMURm.TAUDnTIS[1:0] = 00_B)

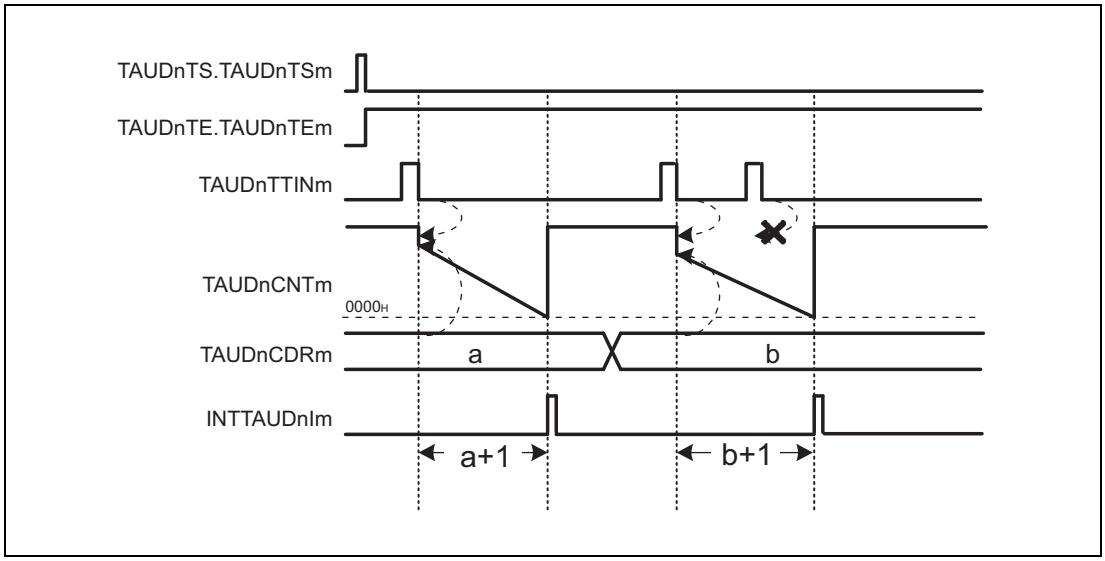

Figure 23.48 General Timing Diagram of Delay Count Function

23.12.5.4 Register Settings

(1) TAUDnCMORm

Bit	15	14	13	12	11	10	9	8	7	6	5	4	3	2	1	0
	TAUDnCKS[1:0]		TAUDnCCS[1:0]		TAUDn MAS	TAUDnSTS[2:0]			TAUDnCOS[1:0]		—	TAUDnMD[4:1]				TAUDn MD0
Value after reset	0	0	0	0	0	0	0	0	0	0	0	0	0	0	0	0
R/W	R/W	R/W	R/W	R/W	R/W	R/W	R/W	R/W	R/W	R/W	R	R/W	R/W	R/W	R/W	R/W

Table 23.63 Contents of the TAUDnCMORm register for Delay Count Function

Bit Position	Bit Name	Function
15, 14	TAUDnCKS[1:0]	Operating Clock Selection 00: Prescaler output CK0 01: Prescaler output CK1 10: Prescaler output CK2 11: Prescaler output CK3
13, 12	TAUDnCCS[1:0]	00: Uses an operating clock as a count clock
11	TAUDnMAS	0: Unused. Set to 0.
10 to 8	TAUDnSTS[2:0]	001: Valid TAUDnTTINm input edge signal is used as an external start trigger.
7, 6	TAUDnCOS[1:0]	00: Unused. Set to 00.
5	Reserved	When read, the value after reset is read. When writing, write the value after reset.
4 to 1	TAUDnMD[4:1]	0100: One-count mode
0	TAUDnMD0	0: Disables a start trigger during operation.

(2) TAUDnCMURm

Bit	7	6	5	4	3	2	1	0
	—	—	—	—	—	—	TAUDnTIS[1:0]	
Value after reset	0	0	0	0	0	0	0	0
R/W	R	R	R	R	R	R	R/W	R/W

Table 23.64 Contents of the TAUDnCMURm register for Delay Count Function

Bit Position	Bit Name	Function
7 to 2	Reserved	When read, the value after reset is read. When writing, write the value after reset.
1, 0	TAUDnTIS[1:0]	00: Detection of falling edge 01: Detection of rising edge 10: Detection of rising and falling edges 11: Setting prohibited

(3) Channel output mode

TAUDnTOE.TAUDnTOEm is set to 0 because the channel output mode is not used with this function. However, this mode can be used in independent channel output mode controlled by software.

(4) Simultaneous rewrite

Simultaneous rewrite registers (TAUDnRDE, TAUDnRDS, TAUDnRDM, and TAUDnRDC) cannot be used with this function. Therefore, these registers should be set to 0.

Table 23.65 Simultaneous Rewrite Settings for Delay Count Function

Bit Name	Setting
TAUDnRDE.TAUDnRDEm	0: Disables simultaneous rewrite
TAUDnRDS.TAUDnRDSm	0: When simultaneous rewrite is disabled (TAUDnRDE.TAUDnRDEm = 0), set these bits to 0
TAUDnRDM.TAUDnRDMm	
TAUDnRDC.TAUDnRDCm	

23.12.5.5 Operating Procedure for Delay Count Function

Table 23.66 Operating Procedure for Delay Count Function

	Operation	TAUDn Status
Initial Channel Setting	Set TAUDnCMORm and TAUDnCMURm registers as described in **Table 23.63, Contents of the TAUDnCMORm register for Delay Count Function**, and **Table 23.64, Contents of the TAUDnCMURm register for Delay Count Function**. Set the value of TAUDnCDRm register.	Channel operation is stopped.
Start Operation	Set TAUDnTS.TAUDnTSm to 1. TAUDnTS.TAUDnTSm is a trigger bit, which is automatically cleared to 0. Detection of TAUDnTTINm start edge	TAUDnTE.TAUDnTEm is set to 1 and TAUDnCNTm waits for detection of the TAUDnTTINm start edge. When a start edge is detected, the TAUDnCDRm value is loaded in TAUDnCNTm.
During Operation	The TAUDnCDRm register value can be changed at any time. The TAUDnCNTm register can be read at all times.	TAUDnCNTm counts down. When the counter reaches 0000_H. INTTAUDnIm is generated. TAUDnCNTm stops counting, returns $FFFF_H$, and waits for a trigger. If a trigger occurs while TAUDnCNTm is counting, the trigger is ignored. Afterwards, this procedure is repeated.
Stop Operation	Set TAUDnTT.TAUDnTTm to 1. TAUDnTT.TAUDnTTm is a trigger bit, which is automatically cleared to 0.	TAUDnTE.TAUDnTEm is cleared to 0 and the counter stops. TAUDnCNTm stops and retains its value.

Restart

23.12.6 One-Pulse Output Function

23.12.6.1 Overview

Summary

This function generates an interrupt (INTTAUDnIm) when a valid TAUDnTTINm input edge is detected and at a defined interval afterward. TAUDnTTINm input signal pulses that occur within the defined interval are ignored. When an interrupt is generated, the TAUDnTTOUTm signal toggles, resulting in a square wave.

Prerequisites

- The operating mode should be set to pulse one-count mode. (See **Table 23.67, Contents of the TAUDnCMORm register for One-Pulse Output Function**.)
- The channel output mode should be set to independent channel output mode 2. (See **Section 23.7, Channel Output Modes**.)

Functional description

The counter is enabled by setting the channel trigger bit (TAUDnTS.TAUDnTSm) to 1. This in turn sets TAUDnTE.TAUDnTEm = 1, enabling count operation.

The counter starts when a valid TAUDnTTINm input edge is detected. The value of TAUDnCDRm is loaded into TAUDnCNTm and the counter starts to count down from the TAUDnCDRm value. An interrupt is generated and TAUDnTTOUTm is set to the active level.

When the counter reaches 0001_H, an interrupt is generated and TAUDnTTOUTm is set to the inactive level. The counter stops at 0000_H and awaits the next valid TAUDnTTINm input edge.

When the counter is counting down, further TAUDnTTINm input signals are ignored, i.e., the counter does not reset.

The value of TAUDnCDRm can be rewritten at any time, and the changed value of TAUDnCDRm is applied the next time the counter starts to count down.

Conditions

The type of edge used as a trigger is specified by the TAUDnCMURm.TAUDnTIS[1:0] bits:

- If TAUDnCMURm.TAUDnTIS[1:0] = 00_B, falling edges trigger the counter.
- If TAUDnCMURm.TAUDnTIS[1:0] = 01_B, rising edges trigger the counter.
- If TAUDnCMURm.TAUDnTIS[1:0] = 10_B, rising and falling edges trigger the counter.

23.12.6.2 Equations

Interval between TAUDnTTINm and INTTAUDnIm = TAUDnTTOUTm (timer output) width = count clock cycle × TAUDnCDRm

23.12.6.3 Block Diagram and General Timing Diagram

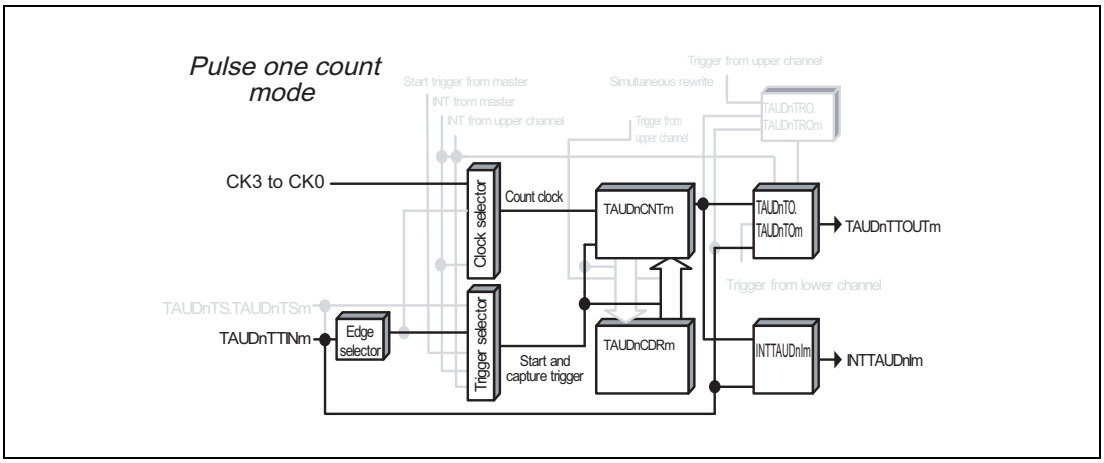

Figure 23.49 Block Diagram of One-Pulse Output Function

The following settings apply to the general timing diagram.

- Detection of falling edge (TAUDnCMURm.TAUDnTIS[1:0] = 00_B)

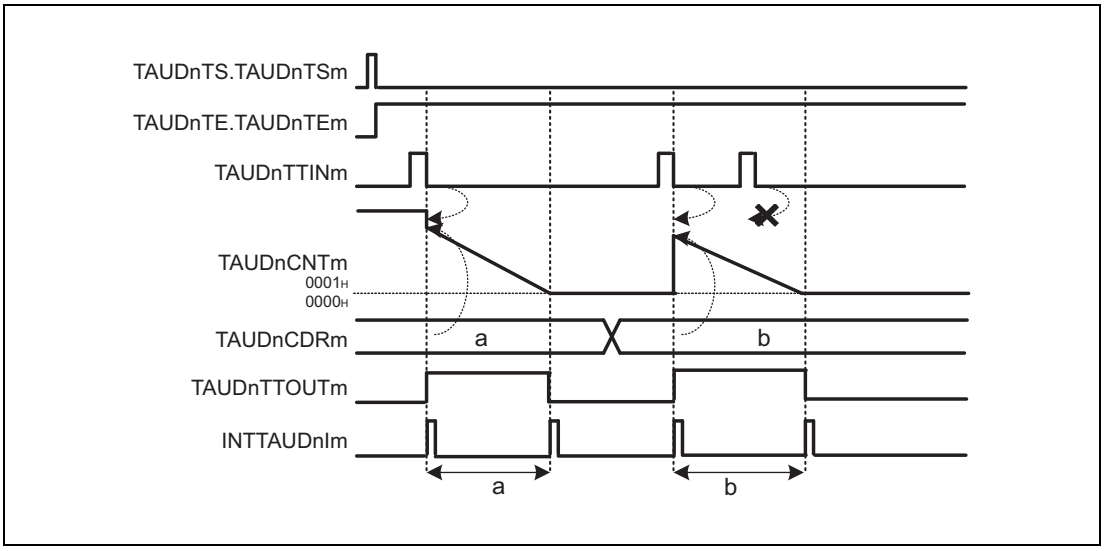

Figure 23.50 General Timing Diagram of One-Pulse Output Function

23.12.6.4 Register Settings

(1) TAUDnCMORm

Bit	15	14	13	12	11	10	9	8	7	6	5	4	3	2	1	0
	TAUDnCKS[1:0]		TAUDnCCS[1:0]		TAUDn MAS	TAUDnSTS[2:0]			TAUDnCOS[1:0]		—	TAUDnMD[4:1]				TAUDn MD0
Value after reset	0	0	0	0	0	0	0	0	0	0	0	0	0	0	0	0
R/W	R/W	R/W	R/W	R/W	R/W	R/W	R/W	R/W	R/W	R/W	R	R/W	R/W	R/W	R/W	R/W

Table 23.67 Contents of the TAUDnCMORm register for One-Pulse Output Function

Bit Position	Bit Name	Function
15, 14	TAUDnCKS[1:0]	Operating Clock Selection 00: Prescaler output CK0 01: Prescaler output CK1 10: Prescaler output CK2 11: Prescaler output CK3
13, 12	TAUDnCCS[1:0]	00: Uses an operating clock as a count clock
11	TAUDnMAS	0: Unused. Set to 0.
10 to 8	TAUDnSTS[2:0]	001: Valid TAUDnTTINm input edge signal is used as an external start trigger.
7, 6	TAUDnCOS[1:0]	00: Unused. Set to 00.
5	Reserved	When read, the value after reset is read. When writing, write the value after reset.
4 to 1	TAUDnMD[4:1]	1010: Pulse one-count mode
0	TAUDnMD0	0: Disables a start trigger during operation.

(2) TAUDnCMURm

Bit	7	6	5	4	3	2	1	0
	—	—	—	—	—	—	TAUDnTIS[1:0]	
Value after reset	0	0	0	0	0	0	0	0
R/W	R	R	R	R	R	R	R/W	R/W

Table 23.68 Contents of the TAUDnCMURm register for One-Pulse Output Function

Bit Position	Bit Name	Function
7 to 2	Reserved	When read, the value after reset is read. When writing, write the value after reset.
1, 0	TAUDnTIS[1:0]	00: Detection of falling edge 01: Detection of rising edge 10: Detection of rising and falling edges 11: Setting prohibited

(3) Channel output mode

Table 23.69 Control Bit Settings in Independent Channel Output Mode 2

Bit Name	Setting
TAUDnTOE.TAUDnTOEm	1: Enables independent channel output mode controlled by software.
TAUDnTOM.TAUDnTOMm	0: Independent channel output
TAUDnTOC.TAUDnTOCm	1: Set/reset mode
TAUDnTOL.TAUDnTOLm	0: Positive logic 1: Negative logic
TAUDnTDE.TAUDnTDEm	0: Disables dead time operation
TAUDnTDM.TAUDnTDMm	0: When dead time operation is disabled (TAUDnTDE.TAUDnTDEm = 0), set these bits to 0
TAUDnTDL.TAUDnTDLm	
TAUDnTRE.TAUDnTREm	0: Disables real-time output
TAUDnTRO.TAUDnTROm	0: When real-time output is disabled (TAUDnTRE.TAUDnTREm = 0), set these bits to 0
TAUDnTRC.TAUDnTRCm	
TAUDnTME.TAUDnTMEm	0: Disables modulation

NOTE

The channel output mode can also be set to channel output mode controlled by software by setting TAUDnTOE.TAUDnTOEm = 0. TAUDnTTOUTm can then be controlled independently of the interrupts. For details, see **Table 23.43, Channel Output Modes**.

(4) Simultaneous rewrite

The simultaneous rewrite registers (TAUDnRDE, TAUDnRDS, TAUDnRDM, and TAUDnRDC) cannot be used with the One-Pulse Output Function. Therefore, these registers should be set to 0.

Table 23.70 Simultaneous Rewrite Settings for One-Pulse Output Function

Bit Name	Setting
TAUDnRDE.TAUDnRDEm	0: Disables simultaneous rewrite
TAUDnRDS.TAUDnRDSm	0: When simultaneous rewrite is disabled (TAUDnRDE.TAUDnRDEm = 0), set these bits to 0
TAUDnRDM.TAUDnRDMm	
TAUDnRDC.TAUDnRDCm	

23.12.6.5 Operating Procedure for One-Pulse Output Function

Table 23.71 Operating Procedure for One-Pulse Output Function

	Operation	TAUDn Status
Initial Channel Setting	Set TAUDnCMORm and TAUDnCMURm registers as described in **Table 23.67, Contents of the TAUDnCMORm register for One-Pulse Output Function**, and **Table 23.68, Contents of the TAUDnCMURm register for One-Pulse Output Function**. Set the value of TAUDnCDRm register. Set channel output mode by setting the control bits as described in **Table 23.69, Control Bit Settings in Independent Channel Output Mode 2**.	Channel operation is stopped.
Start Operation	Set TAUDnTS.TAUDnTSm to 1. TAUDnTS.TAUDnTSm is a trigger bit, which is automatically cleared to 0. Detection of TAUDnTTINm start edge	TAUDnTE.TAUDnTEm is set to 1 and TAUDnCNTm waits for detection of the TAUDnTTINm start edge. When a start edge is detected, TAUDnCNTm loads the TAUDnCDRm value.
During Operation	The value of TAUDnCDRm is changeable at any time. The TAUDnCNTm register can be read at all times.	INTTAUDnIm is generated when TAUDnCNTm starts and TAUDnTTOUTm is set to its active level. TAUDnCNTm counts down. When the counter reaches 0001_H: • INTTAUDnIm is generated. • TAUDnTTOUTm is set to its inactive level. TAUDnCNTm stops counting and waits for a trigger. If a trigger occurs while TAUDnCNTm is counting, the trigger is ignored.
Stop Operation	Set TAUDnTT.TAUDnTTm to 1. TAUDnTT.TAUDnTTm is a trigger bit, which is automatically cleared to 0.	TAUDnTE.TAUDnTEm is cleared to 0 and the counter stops. TAUDnCNTm and TAUDnTTOUTm stop and retain their current values.

Restart

23.12.7 TAUDnTTINm Input Pulse Interval Measurement Function

23.12.7.1 Overview

Summary

This function captures the count value and uses this value and the overflow bit TAUDnCSRm.TAUDnOVF to measure the interval of the TAUDnTTINm input signal.

Prerequisites

- The operating mode should be set to capture mode. See **Table 23.73, Contents of the TAUDnCMORm register for TAUDnTTINm Input Pulse Interval Measurement Function**.
- TAUDnTTOUTm is not used with this function.

Functional description

The counter is started by setting the channel trigger bit (TAUDnTS.TAUDnTSm) to 1. This in turn sets TAUDnTE.TAUDnTEm = 1, enabling count operation. The counter TAUDnCNTm starts to count up from 0000_H. When a valid TAUDnTTINm edge is detected, the value of TAUDnCNTm is captured, transferred to TAUDnCDRm, and an interrupt INTTAUDnIm is generated. The counter resets to 0000_H and subsequently continues operation.

If the counter reaches $FFFF_H$ before a valid TAUDnTTINm edge is detected, it overflows. The counter is reset to 0000_H and subsequently continues operation. The values transferred to TAUDnCDRm and TAUDnCSRm.TAUDnOVF respectively depend on the values of bits TAUDnCMORm.TAUDnCOS[1:0].

Table 23.72 Effects of Overflow

TAUDnCMORm. TAUDnCOS[1:0]	When Overflow Occurs		When a Valid TAUDnTTINm Input is Detected	
	TAUDnCDRm	TAUDnCSRm. TAUDnOVF	TAUDnCDRm, TAUDnCNTm	TAUDnCSRm. TAUDnOVF
00	Unchanged	0	TAUDnCNTm loaded into TAUDnCDRm	1
01		1		
10	Set to $FFFF_H$	0	TAUDnCNTm set to 0, TAUDnCDRm unchanged	Unchanged
11		1		

When TAUDnCMORm.TAUDnCOS[0] = 1, the overflow bit (TAUDnCSRm.TAUDnOVF) can be cleared only by setting TAUDnCSCm.TAUDnCLOV = 1.

The combination of the value of TAUDnCDRm and TAUDnCSRm.TAUDnOVF can be used to deduce the interval of the TAUDnTTINm signal. However, if an overflow occurs multiple times before a valid TAUDnTTINm input is detected, the overflow bit TAUDnCSRm.TAUDnOVF cannot indicate the occurrence of multiple overflows.

The function can be stopped by setting TAUDnTT.TAUDnTTm = 1. This sets TAUDnTE.TAUDnTEm = 0. TAUDnCNTm stops but retains its value. While the function is stopped, valid TAUDnTTINm input edge detection and TAUDnCNTm capture are not performed.

Conditions

If the TAUDnCMORm.TAUDnMD0 bit is set to 0, the first interrupt after a start or restart is not generated. For details, see **Section 23.9, TAUDnTTOUTm Output and INTTAUDnIm Generation when Counter Starts or Restarts**.

NOTE

When TAUDnCMORm.TAUDnCOS[1] = 1, the value of TAUDnCNTm is not loaded into TAUDnCDRm when the first valid TAUDnTTINm input edge occurs after an overflow. However, an interrupt is generated.

23.12.7.2 Equations

TAUDnTTINm input pulse interval = count clock cycle × [(TAUDnCSRm.TAUDnOVF × ($FFFF_H$ + 1)) + TAUDnCDRm capture value + 1]

23.12.7.3 Block Diagram and General Timing Diagram

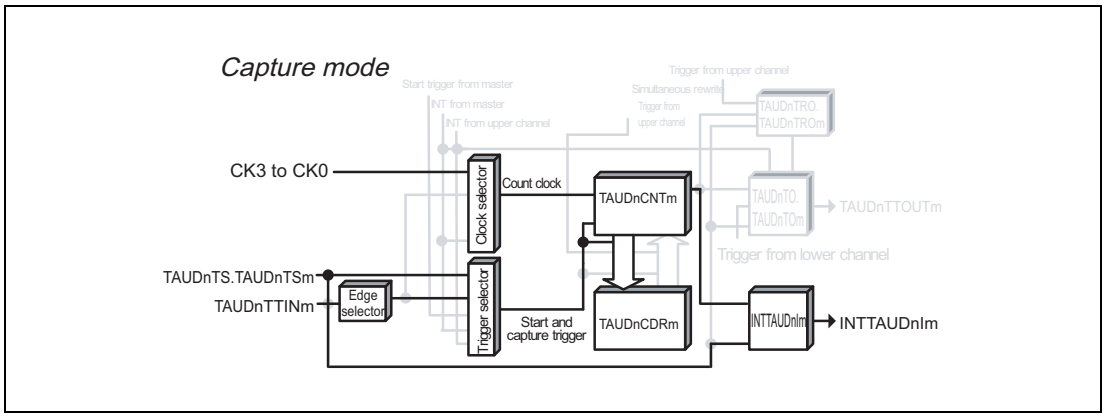

Figure 23.51 Block Diagram of TAUDnTTINm Input Pulse Interval Measurement Function

The following settings apply to the general timing diagram.

- INTTAUDnIm not generated at the beginning of operation (TAUDnCMORm.TAUDnMD0 = 0)
- Falling edge detection (TAUDnCMURm.TAUDnTIS[1:0] = 00_B)
- When a valid TAUDnTTINm input is detected after an overflow, TAUDnCDRm is changed and TAUDnCSRm.TAUDnOVF is set to 1 (TAUDnCMORm.TAUDnCOS[1:0] = 00_B)

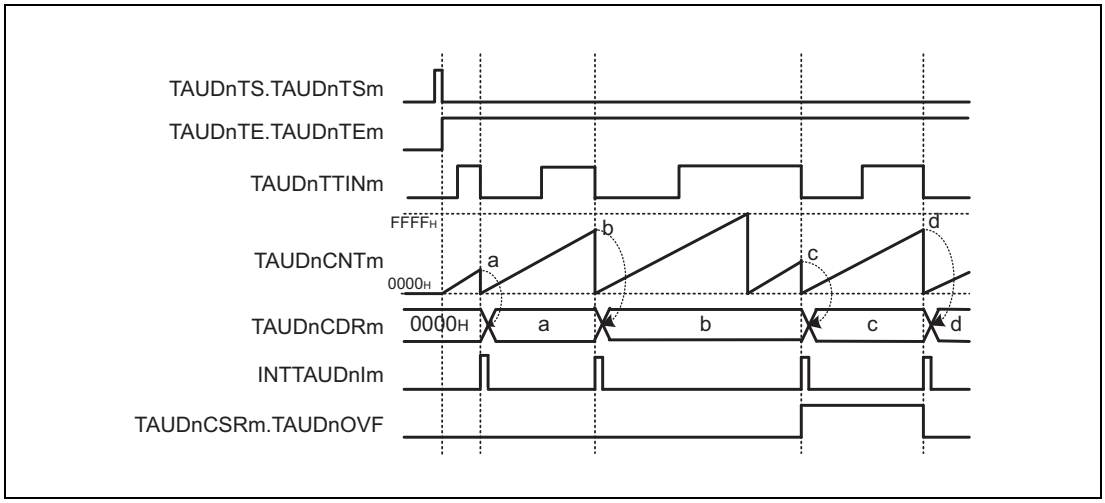

Figure 23.52 General Timing Diagram of TAUDnTTINm Input Pulse Interval Measurement Function

23.12.7.4 Register Settings

(1) TAUDnCMORm

Bit	15	14	13	12	11	10	9	8	7	6	5	4	3	2	1	0
	TAUDnCKS[1:0]		TAUDnCCS[1:0]		TAUDn MAS	TAUDnSTS[2:0]			TAUDnCOS[1:0]		—	TAUDnMD[4:1]				TAUDn MD0
Value after reset	0	0	0	0	0	0	0	0	0	0	0	0	0	0	0	0
R/W	R/W	R/W	R/W	R/W	R/W	R/W	R/W	R/W	R/W	R/W	R	R/W	R/W	R/W	R/W	R/W

Table 23.73 Contents of the TAUDnCMORm register for TAUDnTTINm Input Pulse Interval Measurement Function

Bit Position	Bit Name	Function
15, 14	TAUDnCKS[1:0]	Operating Clock Selection 00: Prescaler output CK0 01: Prescaler output CK1 10: Prescaler output CK2 11: Prescaler output CK3
13, 12	TAUDnCCS[1:0]	00: Uses an operating clock as a count clock
11	TAUDnMAS	0: Independent operation. Set to 0.
10 to 8	TAUDnSTS[2:0]	001: Valid edge of the TAUDnTTINm input signal is the external capture trigger.
7, 6	TAUDnCOS[1:0]	See **Table 23.72, Effects of Overflow**.
5	Reserved	When read, the value after reset is read. When writing, write the value after reset.
4 to 1	TAUDnMD[4:1]	0010: Capture mode
0	TAUDnMD0	0: INTTAUDnIm not generated at the beginning of operation. 1: INTTAUDnIm generated at the beginning of operation.

(2) TAUDnCMURm

Bit	7	6	5	4	3	2	1	0
	—	—	—	—	—	—	TAUDnTIS[1:0]	
Value after reset	0	0	0	0	0	0	0	0
R/W	R	R	R	R	R	R	R/W	R/W

Table 23.74 Contents of the TAUDnCMURm register for TAUDnTTINm Input Pulse Interval Measurement Function

Bit Position	Bit Name	Function
7 to 2	Reserved	When read, the value after reset is read. When writing, write the value after reset.
1, 0	TAUDnTIS[1:0]	00: Detection of falling edge 01: Detection of rising edge 10: Detection of rising and falling edges

(3) Channel output mode

TAUDnTOE.TAUDnTOEm is set to 0 because the channel output mode is not used with this function.

(4) Simultaneous rewrite

The simultaneous rewrite registers (TAUDnRDE, TAUDnRDS, TAUDnRDM, and TAUDnRDC) cannot be used with the TAUDnTTINm input pulse interval measurement function. Therefore, these registers should be set to 0.

Table 23.75 Simultaneous Rewrite Settings for TAUDnTTINm Input Pulse Interval Measurement Function

Bit Name	Setting
TAUDnRDE.TAUDnRDEm	0: Disables simultaneous rewrite
TAUDnRDS.TAUDnRDSm	0: When simultaneous rewrite is disabled (TAUDnRDE.TAUDnRDEm = 0), set these bits to 0
TAUDnRDM.TAUDnRDMm	
TAUDnRDC.TAUDnRDCm	

23.12.7.5 Operating Procedure for TAUDnTTINm Input Pulse Interval Measurement Function

Table 23.76 Operating Procedure for TAUDnTTINm Input Pulse Interval Measurement Function

	Operation	TAUDn Status
Initial Channel Setting	Set TAUDnCMORm and TAUDnCMURm registers as described in **Table 23.73, Contents of the TAUDnCMORm register for TAUDnTTINm Input Pulse Interval Measurement Function**, and **Table 23.74, Contents of the TAUDnCMURm register for TAUDnTTINm Input Pulse Interval Measurement Function**. TAUDnCDRm register operates as a capture register.	Channel operation is stopped.
Start Operation	Set TAUDnTS.TAUDnTSm to 1. TAUDnTS.TAUDnTSm is a trigger bit, which is automatically cleared to 0.	TAUDnTE.TAUDnTEm is set to 1 and the counter starts. TAUDnCNTm is cleared to 0000_H. INTTAUDnIm is generated when TAUDnCMORm.TAUDnMD0 is set to 1.
During Operation	Detection of TAUDnTTINm edge The TAUDnCMURm.TAUDnTIS[1:0] bits can be changed at any time. The TAUDnCDRm and TAUDnCSRm registers can be read at any time. TAUDnCSCm.TAUDnCLOV can be written to 1. (TAUDnCSRm.TAUDnOVF bit is cleared to 0.)	TAUDnCNTm starts to count up from 0000_H. When a TAUDnTTINm valid edge is detected: • TAUDnCNTm transfers (captures) its value to TAUDnCDRm, and returns to 0000_H. • INTTAUDnIm is then generated. Afterwards, this procedure is repeated.
Stop Operation	Set TAUDnTT.TAUDnTTm to 1. TAUDnTT.TAUDnTTm is a trigger bit, which is automatically cleared to 0.	TAUDnTE.TAUDnTEm is cleared to 0 and the counter stops. TAUDnCNTm stops and both it and TAUDnCSRm.TAUDnOVF retain their current values.

Restart

23.12.7.6 Specific Timing Diagrams: Overflow Operation

(1) TAUDnCMORm.TAUDnCOS[1:0] = 00_B

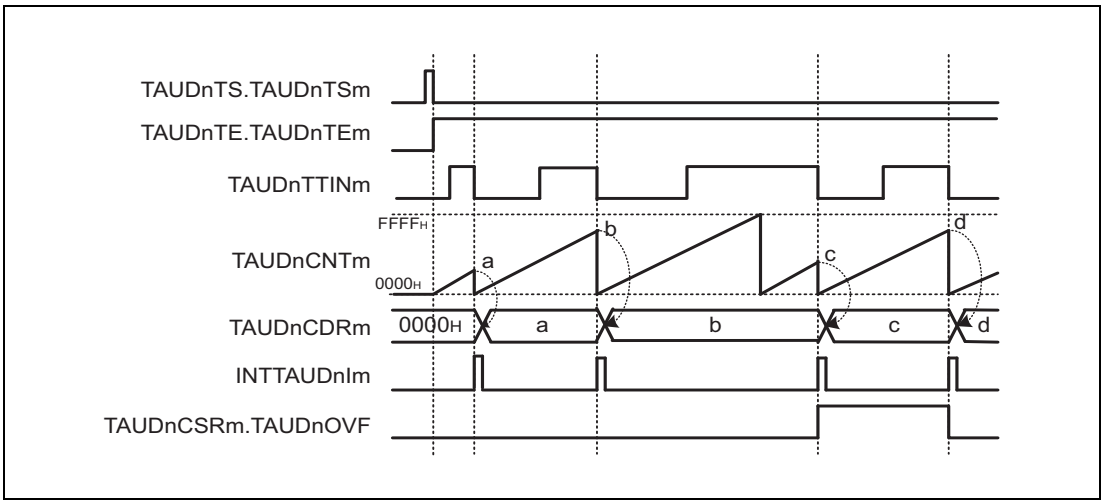

Figure 23.53 TAUDnCMORm.TAUDnCOS[1:0] = 00_B, TAUDnCMORm.TAUDnMD0 = 0, TAUDnCMURm.TAUDnTIS[1:0] = 00_B

- When an overflow occurs, the value of TAUDnCDRm remains unchanged and TAUDnCSRm.TAUDnOVF remains = 0.
- Upon detection of the next valid TAUDnTTINm input edge, the value of TAUDnCNTm is loaded into TAUDnCDRm and TAUDnCSRm.TAUDnOVF is set to 1.
- Upon detection of the next valid TAUDnTTINm input edge with no overflow occurring, TAUDnCSRm.TAUDnOVF is cleared to 0.

(2) TAUDnCMORm.TAUDnCOS[1:0] = 01_B

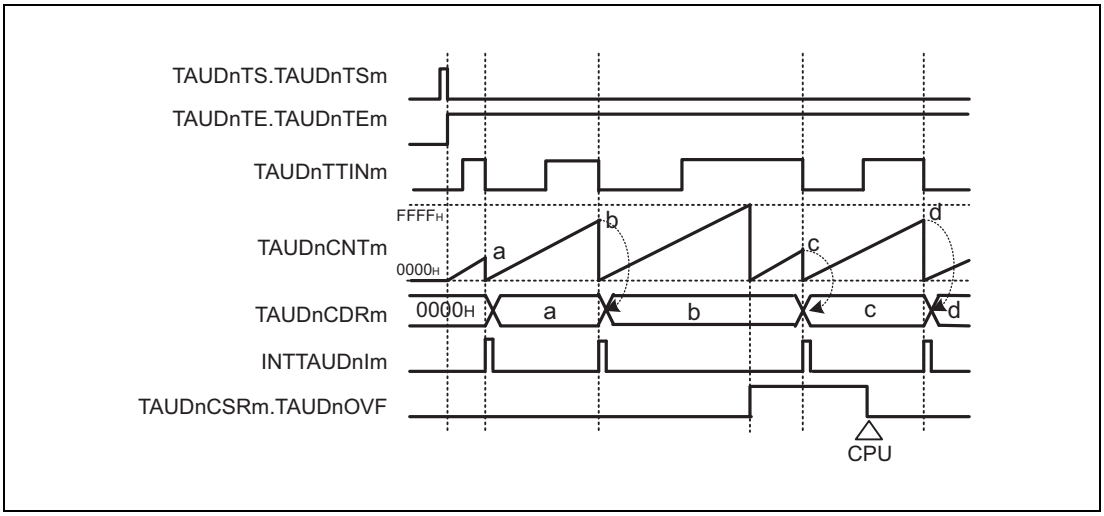

Figure 23.54 TAUDnCMORm.TAUDnCOS[1:0] = 01_B, TAUDnCMORm.TAUDnMD0 = 0, TAUDnCMURm.TAUDnTIS[1:0] = 00_B

- When an overflow occurs, the value of TAUDnCDRm remains unchanged and TAUDnCSRm.TAUDnOVF is set to 1.
- Upon detection of the next valid TAUDnTTINm input edge, the value of TAUDnCNTm is loaded into TAUDnCDRm.
- TAUDnCSRm.TAUDnOVF is only cleared by a CPU command (by setting TAUDnCSCm.TAUDnCLOV bit to 1).

(3) TAUDnCMORm.TAUDnCOS[1:0] = 10_B

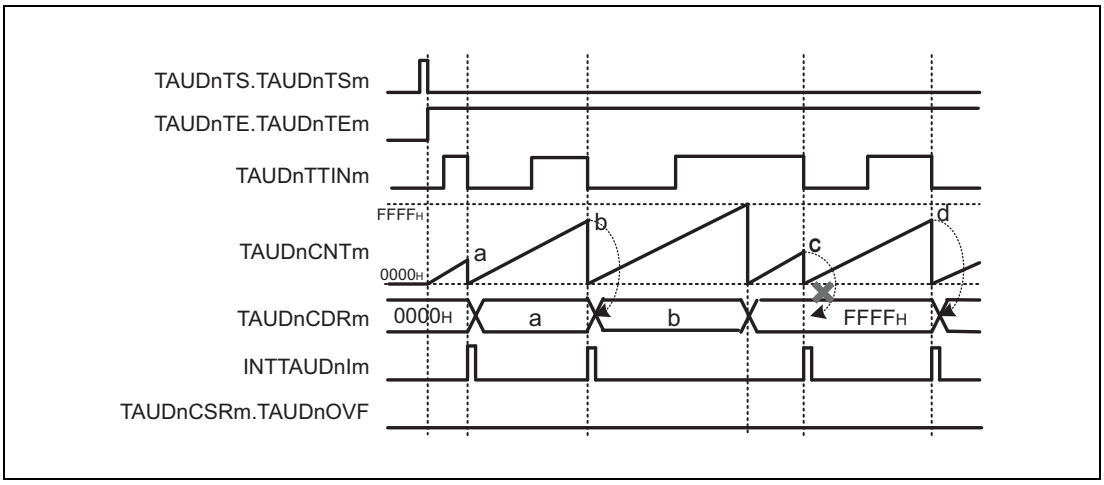

Figure 23.55 TAUDnCMORm.TAUDnCOS[1:0] = 10_B, TAUDnCMORm.TAUDnMD0 = 0, TAUDnCMURm.TAUDnTIS[1:0] = 00_B

- When an overflow occurs, TAUDnCDRm is set to $FFFF_H$ and TAUDnCSRm.TAUDnOVF remains = 0.
- Upon detection of the next valid TAUDnTTINm input edge, TAUDnCNTm is reset to 0, but TAUDnCDRm and TAUDnCSRm.TAUDnOVF remain unchanged.
- Thus, the next valid TAUDnTTINm input edge after the overflow is ignored.

(4) TAUDnCMORm.TAUDnCOS[1:0] = 11_B

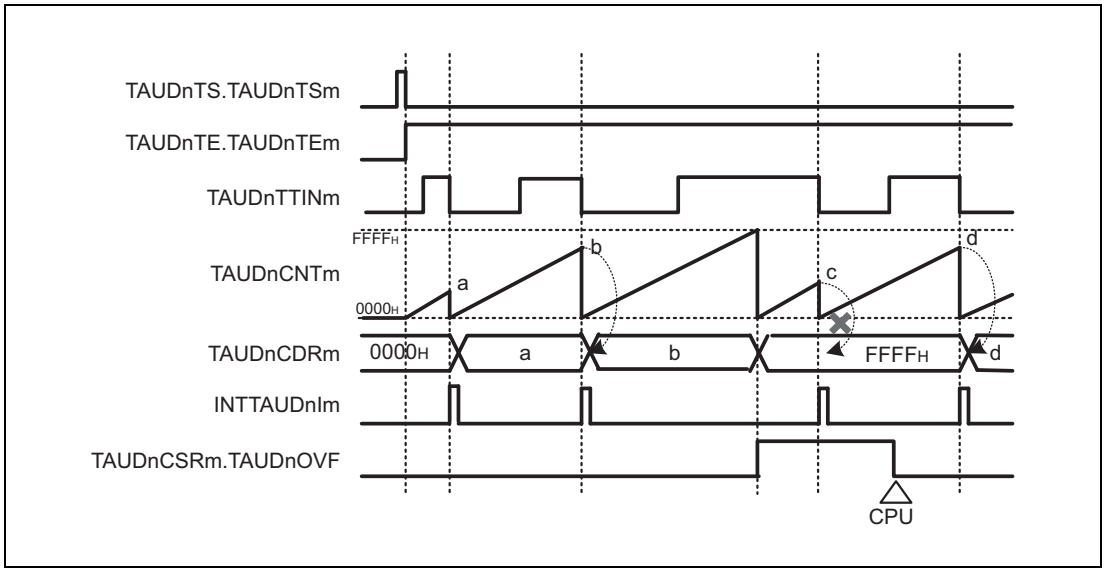

Figure 23.56 TAUDnCMORm.TAUDnCOS[1:0] = 11_B, TAUDnCMORm.TAUDnMD0 = 0, TAUDnCMURm.TAUDnTIS[1:0] = 00_B

- When an overflow occurs, TAUDnCDRm is set to $FFFF_H$ and TAUDnCSRm.TAUDnOVF is set to 1.
- Upon detection of the next valid TAUDnTTINm input edge, TAUDnCNTm is reset to 0, but TAUDnCDRm and TAUDnCSRm.TAUDnOVF remain unchanged.
- Thus, the next valid TAUDnTTINm input edge after the overflow is ignored.
- TAUDnCSRm.TAUDnOVF is cleared by setting TAUDnCSCm.TAUDnCLOV to 1.

23.12.8 TAUDnTTINm Input Signal Width Measurement Function

23.12.8.1 Overview

Summary

This function measures the width of a TAUDnTTINm signal, by starting the count at one edge of TAUDnTTINm and capturing the count value at the other edge.

Prerequisites

- The operating mode should be set to capture and one-count mode. See **Table 23.78, Contents of the TAUDnCMORm register for TAUDnTTINm Input Signal Width Measurement Function**.
- TAUDnTTOUTm is not used with this function.
- TAUDnCMORm.TAUDnMD0 should be set to 0.

Functional description

The counter is started by setting the channel trigger bit (TAUDnTS.TAUDnTSm) to 1. This in turn sets TAUDnTE.TAUDnTEm = 1, enabling count operation. When a valid TAUDnTTINm start edge is detected, the counter TAUDnCNTm starts to count up from 0000_H. When a valid TAUDnTTINm stop edge is detected, the value of TAUDnCNTm is captured, transferred to TAUDnCDRm, and an interrupt INTTAUDnIm is generated. The counter retains its value (CDRn +1) and awaits the next valid TAUDnTTINm input start edge.

If the counter reaches $FFFF_H$ before a valid TAUDnTTINm stop edge is detected, it overflows. The counter is reset to 0000_H and subsequently continues operation. The values transferred to TAUDnCDRm and TAUDnCSRm.TAUDnOVF respectively depend on the values of bits TAUDnCMORm.TAUDnCOS[1:0].

Table 23.77 Effects of Overflow

TAUDnCMORm. TAUDnCOS[1:0]	When Overflow Occurs		When a Valid TAUDnTTINm Input Stop Edge is Detected	
	TAUDnCDRm	TAUDnCSRm. TAUDnOVF	TAUDnCDRm, TAUDnCNTm	TAUDnCSRm. TAUDnOVF
00	Unchanged	0	TAUDnCNTm loaded into TAUDnCDRm	1
01		1		
10	Set to $FFFF_H$	0	TAUDnCNTm stops counting TAUDnCDRm unchanged	Unchanged
11		1		

When TAUDnCMORm.TAUDnCOS[0] = 1, overflow bit TAUDnCSRm.TAUDnOVF can be cleared only by setting TAUDnCSCm.TAUDnCLOV to 1.

The combination of the value of TAUDnCDRm and TAUDnCSRm.TAUDnOVF can be used to deduce the width of the TAUDnTTINm signal. However, if an overflow occurs multiple times before a valid TAUDnTTINm input is detected, overflow bit TAUDnCSRm.TAUDnOVF cannot indicate the occurrence of multiple overflows.

This function cannot be forcibly restarted.

NOTE

When TAUDnCMORm.COS[1] = 1, the value of TAUDnCNTm is not loaded to TAUDnCDRm when the first valid TAUDnTTINm input edge occurs after an overflow. However, an interrupt is generated.

23.12.8.2 Equations

TAUDnTTINm input signal width = count clock cycle × [(TAUDnCSRm.TAUDnOVF × ($FFFF_H$ + 1)) + TAUDnCDRm capture value + 1]

23.12.8.3 Block Diagram and General Timing Diagram

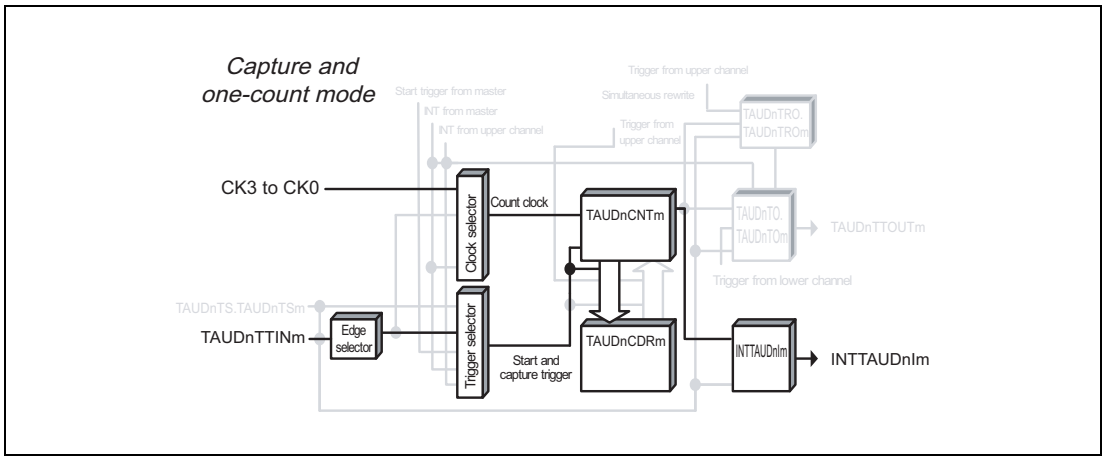

Figure 23.57 Block Diagram of TAUDnTTINm Input Signal Width Measurement Function

The following settings apply to the general timing diagram.

- Detection of rising and falling edges = high width measurement (TAUDnCMURm.TAUDnTIS[1:0] = 11_B)
- When a valid TAUDnTTINm input is detected after an overflow, TAUDnCDRm is changed and TAUDnCSRm.TAUDnOVF is set to 1. (TAUDnCMORm.TAUDnCOS[1:0] = 00_B)

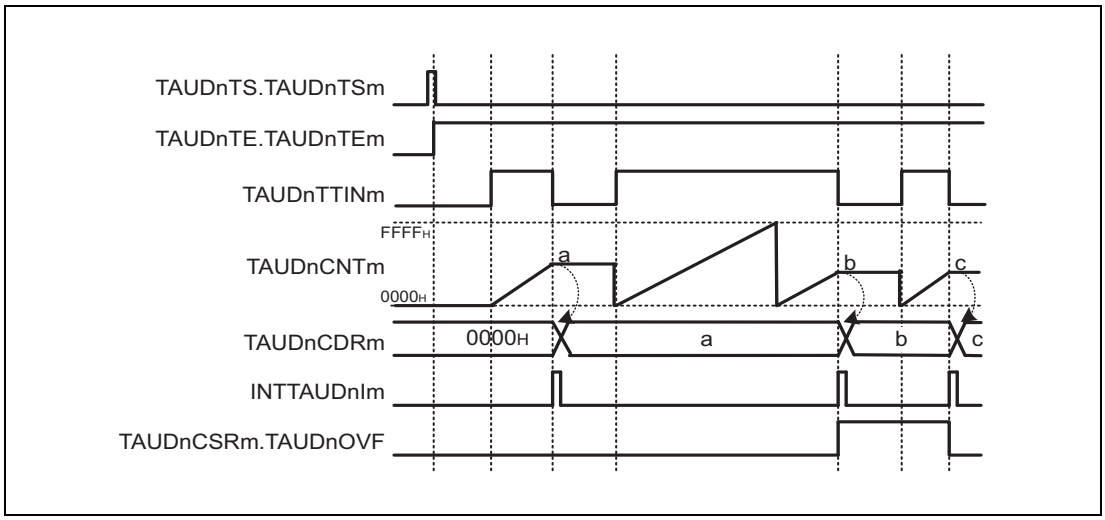

Figure 23.58 General Timing Diagram of TAUDnTTINm Input Signal Width Measurement Function

23.12.8.4 Register Settings

(1) TAUDnCMORm

Bit	15	14	13	12	11	10	9	8	7	6	5	4	3	2	1	0
	TAUDnCKS[1:0]		TAUDnCCS[1:0]		TAUDn MAS	TAUDnSTS[2:0]			TAUDnCOS[1:0]		—	TAUDnMD[4:1]				TAUDn MD0
Value after reset	0	0	0	0	0	0	0	0	0	0	0	0	0	0	0	0
R/W	R/W	R/W	R/W	R/W	R/W	R/W	R/W	R/W	R/W	R/W	R	R/W	R/W	R/W	R/W	R/W

Table 23.78 Contents of the TAUDnCMORm register for TAUDnTTINm Input Signal Width Measurement Function

Bit Position	Bit Name	Function
15, 14	TAUDnCKS[1:0]	Operating Clock Selection 00: prescaler output CK0 01: prescaler output CK1 10: prescaler output CK2 11: prescaler output CK3
13, 12	TAUDnCCS[1:0]	00: Uses an operating clock as a count clock
11	TAUDnMAS	0: Independent operation. Set to 0.
10 to 8	TAUDnSTS[2:0]	010: Valid edge of the TAUDnTTINm input signal is used as an external start trigger and the reverse edge as a stop trigger.
7, 6	TAUDnCOS[1:0]	See **Table 23.77, Effects of Overflow**.
5	Reserved	When read, the value after reset is read. When writing, write the value after reset.
4 to 1	TAUDnMD[4:1]	0110: Capture and one-count mode
0	TAUDnMD0	0: Disables the start trigger during operation.

(2) TAUDnCMURm

Bit	7	6	5	4	3	2	1	0
	—	—	—	—	—	—	TAUDnTIS[1:0]	
Value after reset	0	0	0	0	0	0	0	0
R/W	R	R	R	R	R	R	R/W	R/W

Table 23.79 Contents of the TAUDnCMURm register for TAUDnTTINm Input Signal Width Measurement Function

Bit Position	Bit Name	Function
7 to 2	Reserved	When read, the value after reset is read. When writing, write the value after reset.
1, 0	TAUDnTIS[1:0]	10: Detection of rising and falling edges (low width measurement) 11: Detection of rising and falling edges (high width measurement)

(3) Channel output mode

TAUDnTOE.TAUDnTOEm is set to 0 because the channel output mode is not used with this function.

(4) Simultaneous rewrite

The simultaneous rewrite registers (TAUDnRDE, TAUDnRDS, TAUDnRDM, and TAUDnRDC) cannot be used with the TAUDnTTINm input signal width measurement function. Therefore, these registers should be set to 0.

Table 23.80 Simultaneous Rewrite Settings for TAUDnTTINm Input Signal Width Measurement Function

Bit Name	Setting
TAUDnRDE.TAUDnRDEm	0: Disables simultaneous rewrite
TAUDnRDS.TAUDnRDSm	0: When simultaneous rewrite is disabled (TAUDnRDE.TAUDnRDEm = 0), set these bits to 0
TAUDnRDM.TAUDnRDMm	
TAUDnRDC.TAUDnRDCm	

23.12.8.5 Operating Procedure for TAUDnTTINm Input Signal Width Measurement Function

Table 23.81 Operating Procedure for TAUDnTTINm Input Signal Width Measurement Function

	Operation	TAUDn Status
Initial Channel Setting	Set TAUDnCMORm and TAUDnCMURm registers as described in **Table 23.78, Contents of the TAUDnCMORm register for TAUDnTTINm Input Signal Width Measurement Function**, and **Table 23.79, Contents of the TAUDnCMURm register for TAUDnTTINm Input Signal Width Measurement Function**. TAUDnCDRm register operates as a capture register.	Channel operation is stopped.
Start Operation	Set TAUDnTS.TAUDnTSm to 1. TAUDnTS.TAUDnTSm is a trigger bit, which is automatically cleared to 0.	TAUDnTE.TAUDnTEm is set to 1 and TAUDnCNTm waits for detection of the TAUDnTTINm start edge. When a TAUDnTTINm start edge is detected, TAUDnCNTm starts to count up.
During Operation	TAUDnCDRm, TAUDnCNTm, and TAUDnCSRm registers can be read at any time. TAUDnCSCm.TAUDnCLOV bit can be set to 1.	TAUDnCNTm starts to count up from 0000_H. When TAUDnTTINm valid edge is detected: • TAUDnCNTm transfers (captures) its value to TAUDnCDRm, and retains its value. INTTAUDnIm is then generated. Counting stops at the “value that transferred to TAUDnCDRm + 1” and TUAnCNTm waits for detection of the TAUDnTTINm start edge. Afterwards, this procedure is repeated.
Stop Operation	Set TAUDnTT.TAUDnTTm to 1. TAUDnTT.TAUDnTTm is a trigger bit, which is automatically cleared to 0.	TAUDnTE.TAUDnTEm is cleared to 0 and the counter stops. TAUDnCNTm stops and both it and TAUDnCSRm.TAUDnOVF retain their current values.

Restart

23.12.8.6 Specific Timing Diagrams: Overflow Operation

(1) TAUDnCMORm.TAUDnCOS[1:0] = 00_B

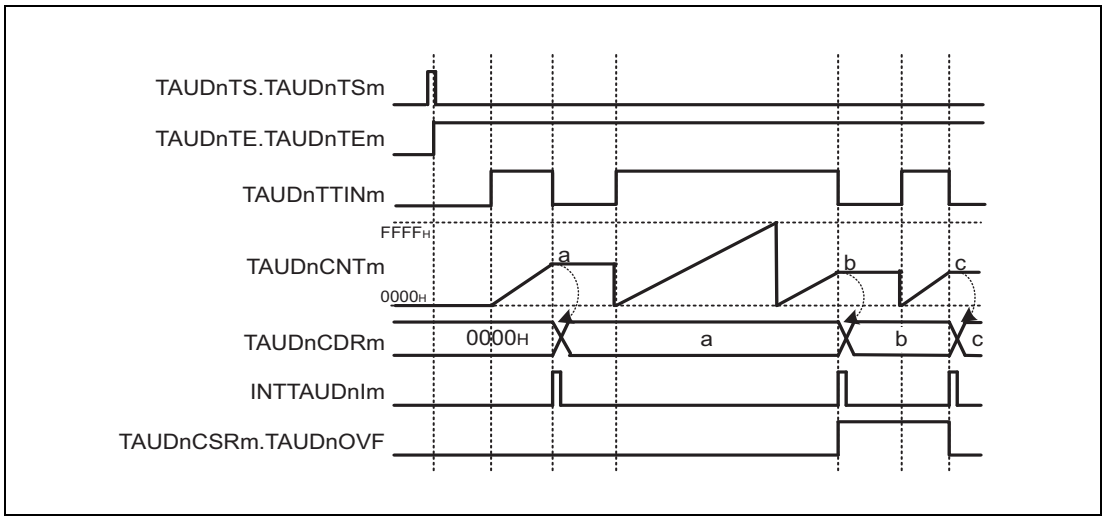

Figure 23.59 TAUDnCMORm.TAUDnCOS[1:0] = 00_B, TAUDnCMORm.TAUDnMD0 = 0, TAUDnCMURm.TAUDnTIS[1:0] = 11_B

- When an overflow occurs, the value of TAUDnCDRm remains unchanged and TAUDnCSRm.TAUDnOVF remains = 0.
- Upon detection of the next valid TAUDnTTINm input edge, the value of TAUDnCNTm is loaded into TAUDnCDRm and TAUDnCSRm.TAUDnOVF is set to 1.
- Upon detection of the next valid TAUDnTTINm input edge with no overflow occurring, TAUDnCSRm.TAUDnOVF is cleared to 0.

(2) TAUDnCMORm.TAUDnCOS[1:0] = 01_B

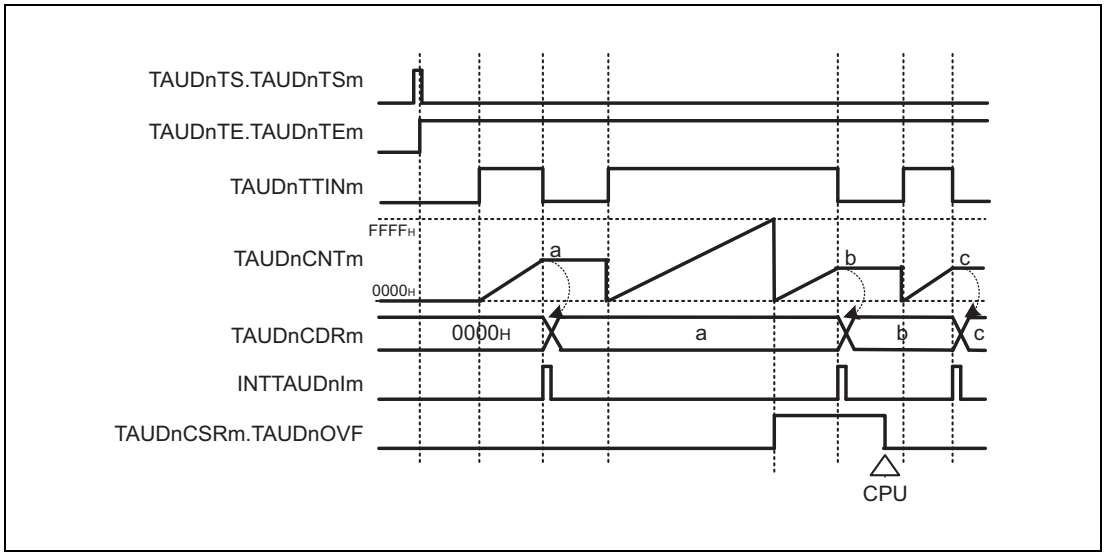

Figure 23.60 TAUDnCMORm.TAUDnCOS[1:0] = 01_B, TAUDnCMORm.TAUDnMD0 = 0, TAUDnCMURm.TAUDnTIS[1:0] = 11_B

- When an overflow occurs, the value of TAUDnCDRm remains unchanged and TAUDnCSRm.TAUDnOVF is set to 1.
- Upon detection of the next valid TAUDnTTINm input edge, the value of TAUDnCNTm is loaded into TAUDnCDRm.
- TAUDnCSRm.TAUDnOVF is only cleared by a CPU command. (by setting TAUDnCSCm.TAUDnCLOV bit to 1.)

(3) TAUDnCMORm.TAUDnCOS[1:0] = 10_B

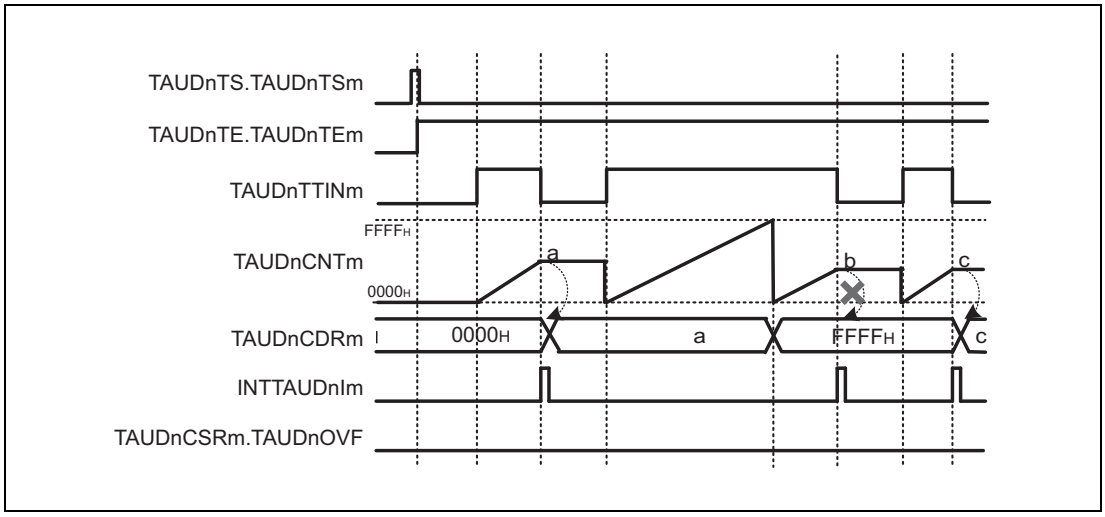

Figure 23.61 TAUDnCMORm.TAUDnCOS[1:0] = 10_B, TAUDnCMORm.TAUDnMD0 = 0, TAUDnCMURm.TAUDnTIS[1:0] = 11_B

- When an overflow occurs, TAUDnCDRm is set to $FFFF_H$ and TAUDnCSRm.TAUDnOVF remains = 0.
- Upon detection of the next valid TAUDnTTINm input edge, TAUDnCNTm stops, but TAUDnCDRm and TAUDnCSRm.TAUDnOVF remain unchanged.
- Thus, the next valid TAUDnTTINm input edge after the overflow is ignored.

(4) TAUDnCMORm.TAUDnCOS[1:0] = 11_B

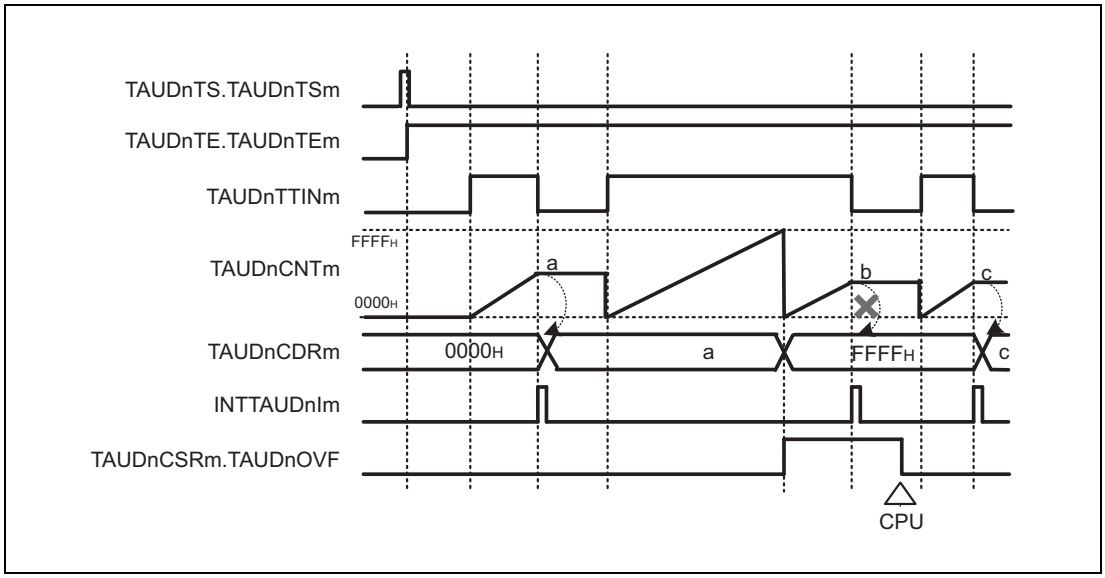

Figure 23.62 TAUDnCMORm.TAUDnCOS[1:0] = 11_B, TAUDnCMORm.TAUDnMD0 = 0, TAUDnCMURm.TAUDnTIS[1:0] = 11_B

- When an overflow occurs, TAUDnCDRm is set to $FFFF_H$ and TAUDnCSRm.TAUDnOVF is set to 1.
- Upon detection of the next valid TAUDnTTINm input edge, TAUDnCNTm stops, but TAUDnCDRm and TAUDnCSRm.TAUDnOVF remain unchanged.
- Thus, the next valid TAUDnTTINm input edge after the overflow is ignored.
- TAUDnCSRm.TAUDnOVF is cleared by setting TAUDnCSCm.TAUDnCLOV to 1.

23.12.9 TAUDnTTINm Input Position Detection Function

23.12.9.1 Overview

Summary

This function measures the input signal duration by capturing the count value at the valid edge of TAUDnTTINm.

Prerequisites

- The operating mode should be set to count capture mode. (See **Table 23.82, Contents of the TAUDnCMORm register for TAUDnTTINm Input Position Detection Function**.)
- TAUDnTTOUTm is not used with this function.

Functional description

The counter is enabled by setting the channel trigger bit (TAUDnTS.TAUDnTSm) to 1. This sets TAUDnTE.TAUDnTEm = 1, enabling count operation. The counter starts counting from 0000_H. When a valid TAUDnTTINm input edge is detected, the current value of TAUDnCNTm is loaded into TAUDnCDRm and an interrupt (INTTAUDnIm) is generated. The count operation continues.

When the counter reaches $FFFF_H$, the counter restarts to count from 0000_H.

NOTE

The TAUDTTINm input signal is sampled at the frequency of the operation clock specified by the TAUDnCMORm.TAUDnCKS[1:0] bits. As a result, the output cycle of the TAUDTTOUTm has an error of ±1 operation clock cycle.

Conditions

If the TAUDnCMORm.TAUDnMD0 bit is set to 0, the first interrupt does not occur at the beginning of operation or after restart. For details, see **Section 23.9, TAUDnTTOUTm Output and INTTAUDnIm Generation when Counter Starts or Restarts**.

23.12.9.2 Equations

Functional duration at a TAUDnTTINm input pulse =

count clock cycle × (TAUDnCDRm capture value + 1)

23.12.9.3 Block Diagram and General Timing Diagram

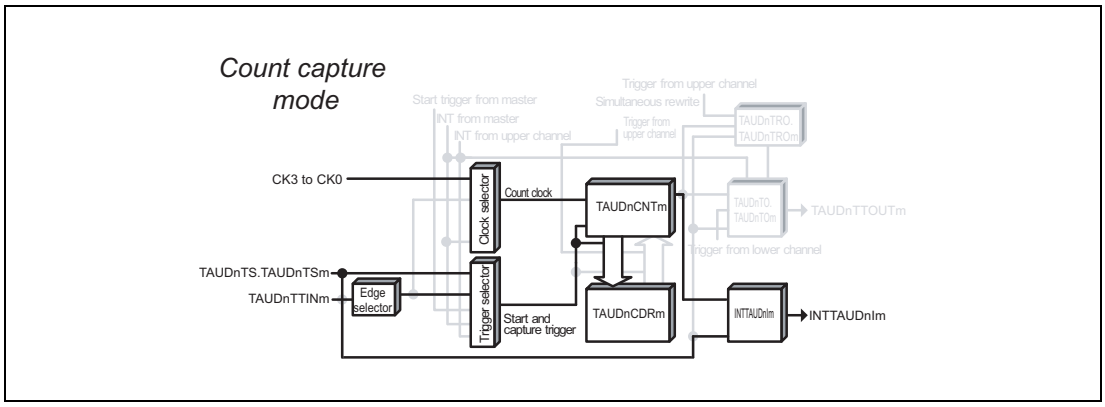

Figure 23.63 Block Diagram of TAUDnTTINm Input Position Detection Function

The following settings apply to the general timing diagram.

- INTTAUDnIm not generated at the beginning of operation. (TAUDnCMORm.TAUDnMD0 = 0)
- Detection of falling edge (TAUDnCMURm.TAUDnTIS[1:0] = 00_B)

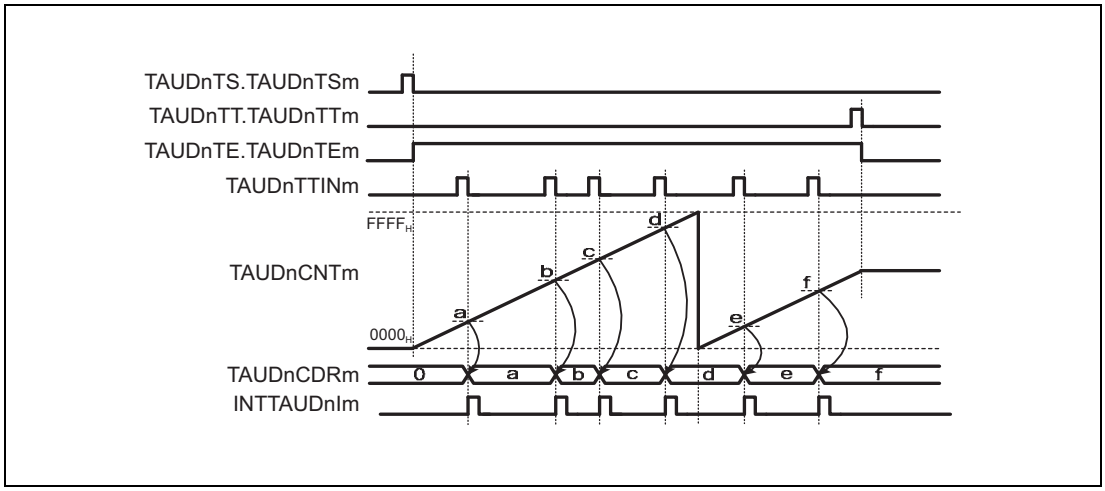

Figure 23.64 General Timing Diagram of TAUDnTTINm Input Position Detection Function

23.12.9.4 Register Settings

(1) TAUDnCMORm

Bit	15	14	13	12	11	10	9	8	7	6	5	4	3	2	1	0
	TAUDnCKS[1:0]		TAUDnCCS[1:0]		TAUDn MAS	TAUDnSTS[2:0]			TAUDnCOS[1:0]		—	TAUDnMD[4:1]				TAUDn MD0
Value after reset	0	0	0	0	0	0	0	0	0	0	0	0	0	0	0	0
R/W	R/W	R/W	R/W	R/W	R/W	R/W	R/W	R/W	R/W	R/W	R	R/W	R/W	R/W	R/W	R/W

Table 23.82 Contents of the TAUDnCMORm register for TAUDnTTINm Input Position Detection Function

Bit Position	Bit Name	Function
15, 14	TAUDnCKS[1:0]	Operating Clock Selection 00: Prescaler output CK0 01: Prescaler output CK1 10: Prescaler output CK2 11: Prescaler output CK3
13, 12	TAUDnCCS[1:0]	00: Uses an operating clock as a count clock
11	TAUDnMAS	0: Unused. Set to 0.
10 to 8	TAUDnSTS[2:0]	001: Valid TAUDnTTINm input edge signal is used as an external capture trigger.
7, 6	TAUDnCOS[1:0]	01: Set this value.
5	Reserved	When read, the value after reset is read. When writing, write the value after reset.
4 to 1	TAUDnMD[4:1]	1011: Count capture mode
0	TAUDnMD0	0: INTTAUDnIm not generated at the beginning of operation. 1: INTTAUDnIm generated at the beginning of operation.

(2) TAUDnCMURm

Bit	7	6	5	4	3	2	1	0
	—	—	—	—	—	—	TAUDnTIS[1:0]	
Value after reset	0	0	0	0	0	0	0	0
R/W	R	R	R	R	R	R	R/W	R/W

Table 23.83 Contents of the TAUDnCMURm register for TAUDnTTINm Input Position Detection Function

Bit Position	Bit Name	Function
7 to 2	Reserved	When read, the value after reset is read. When writing, write the value after reset.
1, 0	TAUDnTIS[1:0]	00: Detection of falling edge 01: Detection of rising edge 10: Detection of rising and falling edges

(3) Channel output mode

The channel output mode is not used by this function.

(4) Simultaneous rewrite

Simultaneous rewrite registers (TAUDnRDE, TAUDnRDS, TAUDnRDM, and TAUDnRDC) cannot be used with TAUDnTTINm input position detection function. Therefore, these registers should be set to 0.

Table 23.84 Simultaneous Rewrite Settings for TAUDnTTINm Input Position Detection Function

Bit Name	Setting
TAUDnRDE.TAUDnRDEm	0: Disables simultaneous rewrite
TAUDnRDS.TAUDnRDSm	0: When simultaneous rewrite is disabled (TAUDnRDE.TAUDnRDEm = 0), set these bits to 0
TAUDnRDM.TAUDnRDMm	
TAUDnRDC.TAUDnRDCm	

23.12.9.5 Operating Procedure for TAUDnTTINm Input Position Detection Function

Table 23.85 Operating Procedure for TAUDnTTINm Input Position Detection Function

	Operation	TAUDn Status
Initial Channel Setting	Set TAUDnCMORm and TAUDnCMURm registers as described in **Table 23.82, Contents of the TAUDnCMORm register for TAUDnTTINm Input Position Detection Function**, and **Table 23.83, Contents of the TAUDnCMURm register for TAUDnTTINm Input Position Detection Function**. TAUDnCDRm register operates as a capture register.	Channel operation is stopped.
Start Operation	Set TAUDnTS.TAUDnTSm to 1. TAUDnTS.TAUDnTSm is a trigger bit, which is automatically cleared to 0.	TAUDnTE.TAUDnTEm is set to 1 and the counter starts. If TAUDnCMORm.TAUDnMD0 is 1, INTTAUDnIm occurs.
During Operation	The TAUDnCMURm.TIS[1:0] bits can be changed at any time. The TAUDnCDRm and TAUDnCSRm registers can be read at any time.	TAUDnCNTm starts to count up from 0000_H. When a valid TAUDnTTINm edge is detected: • TAUDnCNTm transfers (captures) its own value to TAUDnCDRm. • INTTAUDnIm occurs. • The counter is not cleared to 0000_H and TAUDnCNTm continues counting. Afterwards, this procedure is repeated. When TAUDnCNTm reaches $FFFF_H$, the counter restarts from 0000_H.
Stop Operation	Set TAUDnTT.TAUDnTTm to 1. TAUDnTT.TAUDnTTm is a trigger bit, which is automatically cleared to 0.	TAUDnTE.TAUDnTEm is cleared to 0 and the counter stops. TAUDnCNTm stops. TAUDnCNTm retains its current value.

Restart

23.12.9.6 Specific Timing Diagrams

(1) Operation stop and restart

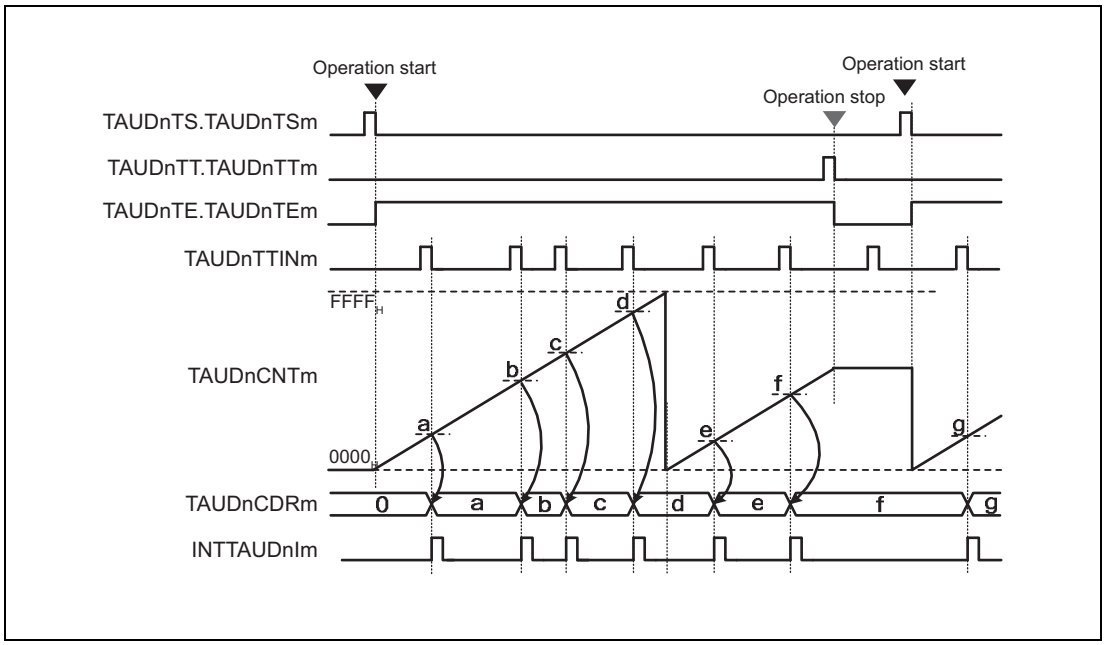

Figure 23.65 Operation Stop and Restart (TAUDnCMORm.TAUDnMD0 = 0, TAUDnCMURm.TAUDnTIS[1:0] = 00_B)

- The counter can stop operating by setting TAUDnTT.TAUDnTTm to 1. This sets TAUDnTE.TAUDnTEm to 0.
- TAUDnCNTm stops and retains its current value.
- If the counter stops operating, valid TAUDnTTINm input edges are ignored.
- The counter can be restarted by setting TAUDnTS.TAUDnTSm to 1. TAUDnCNTm restarts to count from 0000_H.

23.12.10 TAUDnTTINm Input Period Count Detection Function

23.12.10.1 Overview

Summary

This function measures the cumulative width of a TAUDnTTINm input signal.

Prerequisites

- The operating mode should be set to capture and gate count mode. (See **Table 23.86, Contents of the TAUDnCMORm register for TAUDnTTINm Input Period Count Detection Function**.)
- TAUDnTTOUTm is not used with this function.

Functional description

The counter is enabled by setting the channel trigger bit (TAUDnTS.TAUDnTSm) to 1. This in turn sets TAUDnTE.TAUDnTEm = 1, enabling count operation. The counter awaits a valid TAUDnTTINm input edge.

When a valid TAUDnTTINm input start edge is detected, the counter starts to count from 0000_H.

When a valid TAUDnTTINm input stop edge is detected, the current TAUDnCNTm value is loaded into TAUDnCDRm and an interrupt (INTTAUDnIm) is generated. The counter stops and retains its value (TAUDnCDRm + 1) until the next valid TAUDnTTINm input start edge is detected.

When the next valid TAUDnTTINm input start edge is detected, the counter restarts to count from the value retained when stopped.

If the counter reaches $FFFF_H$, the counter restart to count from 0000_H.

NOTES

1. TAUDnTTINm input signal is sampled at the frequency of an operating clock set by the TAUDnCMORm.TAUDnCKS[1:0] bits.
2. As this function is to measure the TAUDTTINm input signal width, setting TAUDnTS.TAUDnTSm to 1 is disabled while TAUDnTE.TAUDnTEm = 1.

Conditions

The valid start and stop edges are specified by the TAUDnCMURm.TAUDnTIS[1:0] bits:

- If TAUDnCMURm.TAUDnTIS[1:0] = 10_B, the TAUDnTTINm input low period is measured. The start trigger is a falling edge and the stop trigger is a rising edge.
- If TAUDnCMURm.TAUDnTIS[1:0] = 11_B, the TAUDnTTINm input high period is measured. The start trigger is a rising edge and the stop trigger is a falling edge.

23.12.10.2 Equations

Cumulative TAUDnTTINm input width = count clock cycle × (TAUDnCDRm capture value + 1)

23.12.10.3 Block Diagram and General Timing Diagram

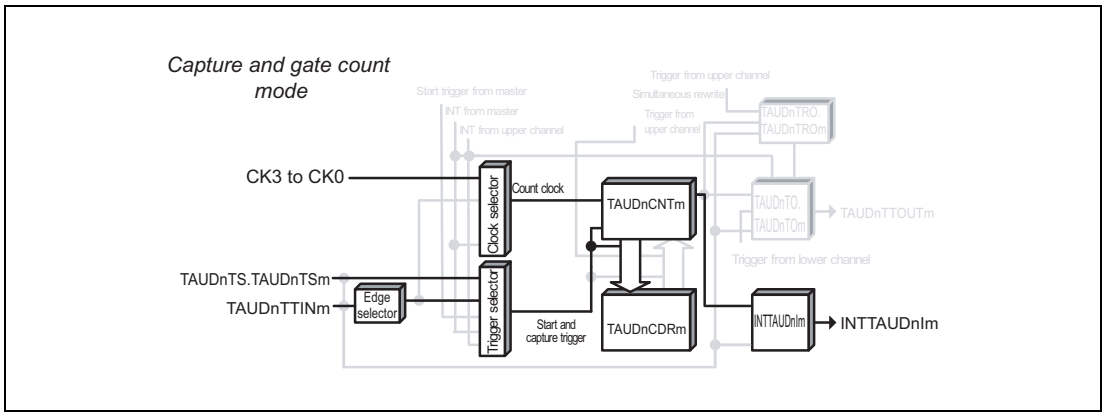

Figure 23.66 Block Diagram of TAUDnTTINm Input Period Count Detection Function

The following settings apply to the general timing diagram.

- Detection of rising and falling edges = high width measurement (TAUDnCMURm.TAUDnTIS[1:0] = 11_B)

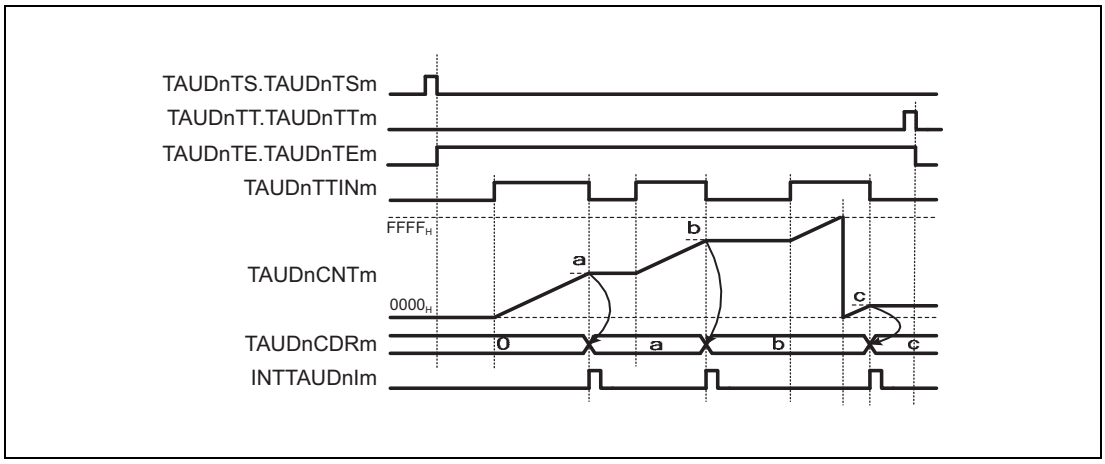

Figure 23.67 General Timing Diagram of TAUDnTTINm Input Period Count Detection Function

23.12.10.4 Register Settings

(1) TAUDnCMORm

Bit	15	14	13	12	11	10	9	8	7	6	5	4	3	2	1	0
	TAUDnCKS[1:0]		TAUDnCCS[1:0]		TAUDn MAS	TAUDnSTS[2:0]			TAUDnCOS[1:0]		—	TAUDnMD[4:1]				TAUDn MD0
Value after reset	0	0	0	0	0	0	0	0	0	0	0	0	0	0	0	0
R/W	R/W	R/W	R/W	R/W	R/W	R/W	R/W	R/W	R/W	R/W	R	R/W	R/W	R/W	R/W	R/W

Table 23.86 Contents of the TAUDnCMORm register for TAUDnTTINm Input Period Count Detection Function

Bit Position	Bit Name	Function
15, 14	TAUDnCKS[1:0]	Operating Clock Selection 00: Prescaler output CK0 01: Prescaler output CK1 10: Prescaler output CK2 11: Prescaler output CK3
13, 12	TAUDnCCS[1:0]	00: Uses an operating clock as a count clock
11	TAUDnMAS	0: Unused. Set to 0.
10 to 8	TAUDnSTS[2:0]	010: Valid edge of the TAUDnTTINm input signal is used as an external start trigger and the reverse edge as a stop trigger.
7, 6	TAUDnCOS[1:0]	01: Set to this value.
5	Reserved	When read, the value after reset is read. When writing, write the value after reset.
4 to 1	TAUDnMD[4:1]	1101: Capture and gate count mode
0	TAUDnMD0	0: Disables the start trigger during operation.

(2) TAUDnCMURm

Bit	7	6	5	4	3	2	1	0
	—	—	—	—	—	—	TAUDnTIS[1:0]	
Value after reset	0	0	0	0	0	0	0	0
R/W	R	R	R	R	R	R	R/W	R/W

Table 23.87 Contents of the TAUDnCMURm register for TAUDnTTINm Input Period Count Detection Function

Bit Position	Bit Name	Function
7 to 2	Reserved	When read, the value after reset is read. When writing, write the value after reset.
1, 0	TAUDnTIS[1:0]	10: Detection of rising and falling edges (low width measurement) 11: Detection of rising and falling edges (high width measurement)

(3) Channel output mode

TAUDnTOE.TAUDnTOEm is set to 0 because the channel output mode is not used with this function.

(4) Simultaneous rewrite

Simultaneous rewrite registers (TAUDnRDE, TAUDnRDS, TAUDnRDM, and TAUDnRDC) cannot be used with TAUDnTTINm input period count detection. Therefore, these registers should be set to 0.

Table 23.88 Simultaneous Rewrite Settings for TAUDnTTINm Input Period Count Detection Function

Bit Name	Setting
TAUDnRDE.TAUDnRDEm	0: Disables simultaneous rewrite
TAUDnRDS.TAUDnRDSm	0: When simultaneous rewrite is disabled (TAUDnRDE.TAUDnRDEm = 0), set these bits to 0
TAUDnRDM.TAUDnRDMm	
TAUDnRDC.TAUDnRDCm	

23.12.10.5 Operating Procedure for TAUDnTTINm Input Period Count Detection Function

Table 23.89 Operating Procedure for TAUDnTTINm Input Period Count Detection Function

	Operation	TAUDn Status
Initial Channel Setting	Set TAUDnCMORm and TAUDnCMURm registers as described in **Table 23.86, Contents of the TAUDnCMORm register for TAUDnTTINm Input Period Count Detection Function**, and **Table 23.87, Contents of the TAUDnCMURm register for TAUDnTTINm Input Period Count Detection Function**. TAUDnCDRm register operates as a capture register.	Channel operation is stopped.
Start Operation	Set TAUDnTS.TAUDnTSm to 1. TAUDnTS.TAUDnTSm is a trigger bit, which is automatically cleared to 0.	TAUDnTE.TAUDnTEm is set to 1 and TAUDnCNTm waits for detection of the TAUDnTTINm start edge.
During Operation	Detection of TAUDnTTINm edge The TAUDnCDRm, TAUDnCNTm, and TAUDnCSRm registers can be read at any time.	When a TAUDnTTINm start edge (rising edge for high width measurement, falling edge for low width measurement) is detected, TAUDnCNTm starts counting up from the stop value. When TAUDnCNTm detects a stop edge (falling edge for high width measurement, rising edge for low width measurement), it transfers the value to TAUDnCDRm and INTTAUDnIm is generated. Counting stops at the “value transferred to TAUDnCDRm + 1” and TAUDnCNTm waits for detection of the TAUDnTTINm start edge. When TAUDnCNTm reaches $FFFF_H$, the counter restarts to count from 0000_H. Afterwards, this procedure is repeated.
Stop Operation	Set TAUDnTT.TAUDnTTm to 1. TAUDnTT.TAUDnTTm is a trigger bit, which is automatically cleared to 0.	TAUDnTE.TAUDnTEm is cleared to 0 and the counter stops. TAUDnCNTm stops. TAUDnCNTm retains its current value.

Restart

23.12.10.6 Specific Timing Diagrams

(1) Operation stop and restart

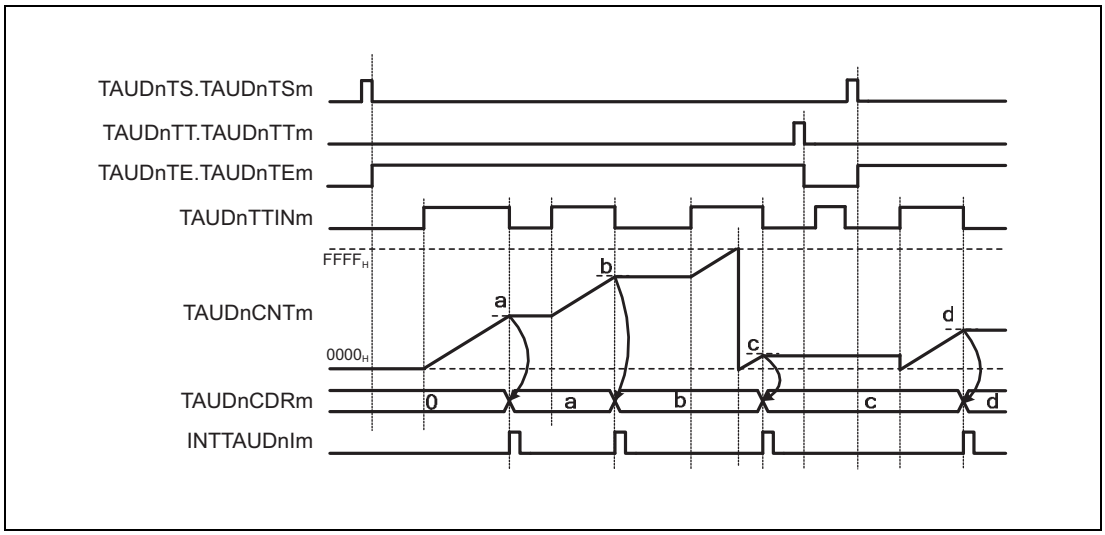

Figure 23.68 Operation Stop and Restart (TAUDnCMURm.TAUDnTIS[1:0] = 11_B)

- The counter can be stopped by setting TAUDnTT.TAUDnTTm to 1. This sets TAUDnTE.TAUDnTEm to 0.
- TAUDnCNTm stops and retains its current value.
- If the counter is stopped, valid TAUDnTTINm input edges are ignored.
- The counter can be restarted by setting TAUDnTS.TAUDnTSm to 1. TAUDnCNTm restarts to count from 0000_H.

23.12.11 TAUDnTTINm Input Pulse Interval Judgment Function

23.12.11.1 Overview

Summary

This function outputs the result of a comparison between the count value (TAUDnCNTm) and the value in the channel data register (TAUDnCDRm) when a TAUDnTTINm input pulse occurs. An interrupt request signal INTTAUDnIm is generated if the result of the comparison is true.

Prerequisites

- The operating mode should be set to judge mode. See **Table 23.90, Contents of the TAUDnCMORm register for TAUDnTTINm Input Pulse Interval Judgment Function**.
- TAUDnTTOUTm is not used with this function.

Functional description

The counter is started by setting the channel trigger bit (TAUDnTS.TAUDnTSm) to 1. This in turn sets TAUDnTE.TAUDnTEm = 1, enabling count operation. The current value of TAUDnCDRm is loaded into TAUDnCNTm and the counter starts to count down from this value.

When a TAUDnTTINm valid edge is detected or TAUDnTS.TAUDnTSm is set to 1, the function compares the current values of TAUDnCNTm and TAUDnCDRm. An interrupt request signal INTTAUDnIm is generated if the result of the comparison is true. TAUDnCNTm reloads the value of TAUDnCDRm and subsequently continues operation, regardless of the result of the comparison.

If the counter reaches 0000_H before a TAUDnTTINm valid edge is detected, TAUDnCNTm overflows and is set to $FFFF_H$. It then continues to count down.

The value of TAUDnCDRm can be rewritten at any time, and the changed value of TAUDnCDRm is applied the next time the counter starts to count down.

Conditions

The TAUDnCMORm.TAUDnMD0 bit specifies the type of comparison:

- If TAUDnCMORm.TAUDnMD0 = 0, INTTAUDnIm is generated when TAUDnCNTm ≤ TAUDnCDRm.
- If TAUDnCMORm.TAUDnMD0 = 1, INTTAUDnIm is generated when TAUDnCNTm > TAUDnCDRm.

23.12.11.2 Block Diagram and General Timing Diagram

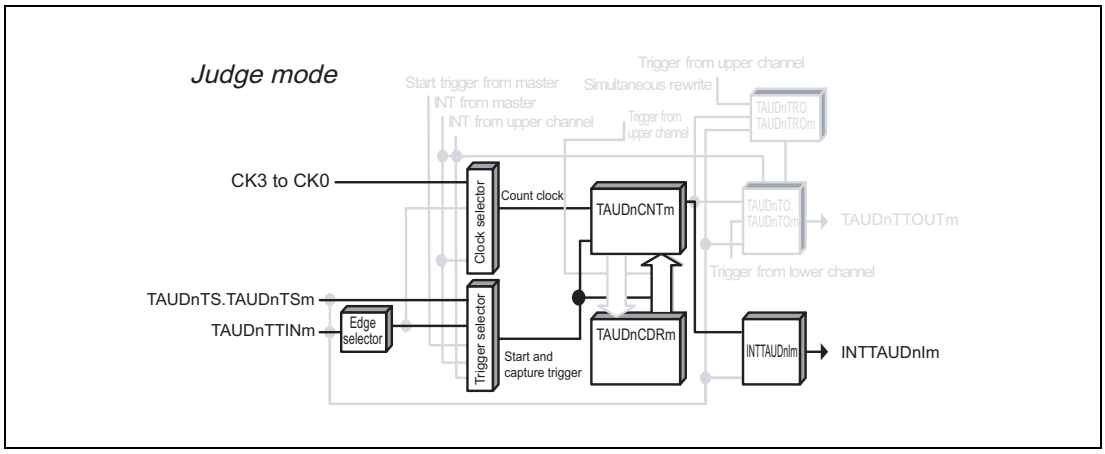

Figure 23.69 Block Diagram of TAUDnTTINm Input Pulse Interval Judgment Function

The following settings apply to the general timing diagram.

- Detection of falling edge (TAUDnCMURm.TAUDnTIS[1:0] = 00_B)

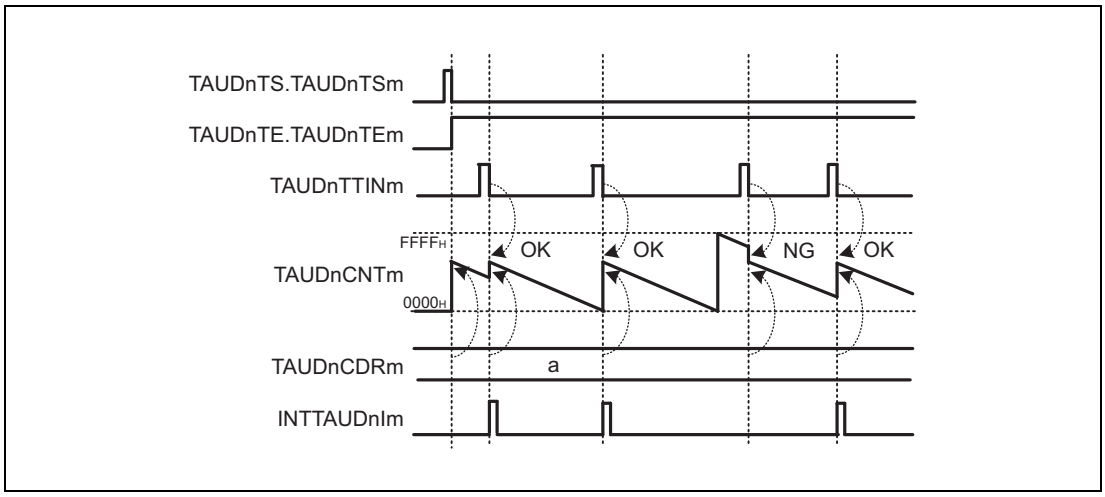

Figure 23.70 General Timing Diagram of TAUDnTTINm Input Pulse Interval Judgment Function

23.12.11.3 Register Settings

(1) TAUDnCMORm

Bit	15	14	13	12	11	10	9	8	7	6	5	4	3	2	1	0
	TAUDnCKS[1:0]		TAUDnCCS[1:0]		TAUDn MAS	TAUDnSTS[2:0]			TAUDnCOS[1:0]		—	TAUDnMD[4:1]				TAUDn MD0
Value after reset	0	0	0	0	0	0	0	0	0	0	0	0	0	0	0	0
R/W	R/W	R/W	R/W	R/W	R/W	R/W	R/W	R/W	R/W	R/W	R	R/W	R/W	R/W	R/W	R/W

Table 23.90 Contents of the TAUDnCMORm register for TAUDnTTINm Input Pulse Interval Judgment Function

Bit Position	Bit Name	Function
15, 14	TAUDnCKS[1:0]	Operating Clock Selection 00: Prescaler output CK0 01: Prescaler output CK1 10: Prescaler output CK2 11: Prescaler output CK3
13, 12	TAUDnCCS[1:0]	00: Uses an operating clock as a count clock
11	TAUDnMAS	0: Independent operation. Set to 0.
10 to 8	TAUDnSTS[2:0]	001: Valid edge of the TAUDnTTINm input signal is used as an external start trigger.
7, 6	TAUDnCOS[1:0]	00: Unused. Set to 00.
5	Reserved	When read, the value after reset is read. When writing, write the value after reset.
4 to 1	TAUDnMD[4:1]	0001: Judge mode
0	TAUDnMD0	0: INTTAUDnIm is generated when TAUDnCNTm ≤ TAUDnCDRm 1: INTTAUDnIm is generated when TAUDnCNTm > TAUDnCDRm

(2) TAUDnCMURm

Bit	7	6	5	4	3	2	1	0
	—	—	—	—	—	—	TAUDnTIS[1:0]	
Value after reset	0	0	0	0	0	0	0	0
R/W	R	R	R	R	R	R	R/W	R/W

Table 23.91 Contents of the TAUDnCMURm register for TAUDnTTINm Input Pulse Interval Judgment Function

Bit Position	Bit Name	Function
7 to 2	Reserved	When read, the value after reset is read. When writing, write the value after reset.
1, 0	TAUDnTIS[1:0]	00: Detection of falling edge 01: Detection of rising edge 10: Detection of rising and falling edges 11: Setting prohibited

(3) Channel output mode

TAUDnTOE.TAUDnTOEm is set to 0 because the channel output mode is not used with this function.

(4) Simultaneous rewrite

Simultaneous rewrite registers (TAUDnRDE, TAUDnRDS, TAUDnRDM, and TAUDnRDC) cannot be used with TAUDnTTINm input pulse interval judgment. Therefore, these registers should be set to 0.

Table 23.92 Simultaneous Rewrite Settings for TAUDnTTINm Input Pulse Interval Judgment Function

Bit Name	Setting
TAUDnRDE.TAUDnRDEm	0: Disables simultaneous rewrite
TAUDnRDS.TAUDnRDSm	0: When simultaneous rewrite is disabled (TAUDnRDE.TAUDnRDEm = 0), set these bits to 0
TAUDnRDM.TAUDnRDMm	
TAUDnRDC.TAUDnRDCm	

23.12.11.4 Operating Procedure for TAUDnTTINm Input Pulse Interval Judgment Function

Table 23.93 Operating Procedure for TAUDnTTINm Input Pulse Interval Judgment Function

	Operation	TAUDn Status
Initial Channel Setting	Set TAUDnCMORm and TAUDnCMURm registers as described in **Table 23.90, Contents of the TAUDnCMORm register for TAUDnTTINm Input Pulse Interval Judgment Function**, and **Table 23.91, Contents of the TAUDnCMURm register for TAUDnTTINm Input Pulse Interval Judgment Function**. Set the value of TAUDnCDRm register.	Channel operation is stopped.
Start Operation	Set TAUDnTS.TAUDnTSm to 1. TAUDnTS.TAUDnTSm is a trigger bit, which is automatically cleared to 0.	TAUDnTE.TAUDnTEm is set to 1 and the counter starts. TAUDnCDRm value is loaded into TAUDnCNTm.
During Operation	The following register can be changed at any time: • TAUDnCNTm register	When TAUDnCMORm.TAUDnMD0 = 0 If TAUDnCNTm ≤ TAUDnCDRm when a TAUDnTTINm input edge is detected, INTTAUDnIm is generated. When TAUDnCMORm.TAUDnMD0 = 1 If TAUDnCNTm > TAUDnCDRm when a TAUDnTTINm input edge is detected, INTTAUDnIm is generated. If a TAUDnTTINm input edge is detected, then TAUDnCNTm starts to count down from the value of TAUDnCDRm. Afterwards, this procedure is repeated.
Stop Operation	Set TAUDnTT.TAUDnTTm to 1. TAUDnTT.TAUDnTTm is a trigger bit, which is automatically cleared to 0.	TAUDnTE.TAUDnTEm is cleared to 0 and the counter stops. TAUDnCNTm stops and retains its current value.

Restart

23.12.12 TAUDnTTINm Input Signal Width Judgment Function

23.12.12.1 Overview

Summary

This function compares the count value (TAUDnCNTm) for the high or low level width of a TAUDnTTINm input signal and the TAUDnCDRm value, and outputs the judgment result from the interrupt request signal INTTAUDnIm.

Prerequisites

- The operating mode should be set to judge and one-count mode. (See **Table 23.94, Contents of the TAUDnCMORm register for TAUDnTTINm Input Signal Width Judgment Function**)
- TAUDnTTOUTm is not used with this function.

Functional description

The counter is started by setting the channel trigger bit (TAUDnTS.TAUDnTSm) to 1. This in turn sets TAUDnTE.TAUDnTEm = 1, enabling count operation. When a valid TAUDnTTINm input start edge is detected, the current value of TAUDnCDRm is loaded into TAUDnCNTm and the counter starts to count down from this value.

When a TAUDnTTINm valid stop edge is detected, the function compares the current values of TAUDnCNTm and TAUDnCDRm. An interrupt request signal INTTAUDnIm is generated if the result of the comparison is true. The counter TAUDnCNTm retains its value until the next valid TAUDnTTINm start edge is detected, regardless of the result of the comparison.

If the counter reaches 0000_H before a valid TAUDnTTINm stop edge is detected, TAUDnCNTm overflows and is set to $FFFF_H$. The counter then continues to count down.

The value of TAUDnCDRm can be rewritten at any time, and the changed value of TAUDnCDRm is applied the next time the counter starts to count down.

Conditions

- The TAUDnCMORm.TAUDnMD0 bit specifies the type of comparison:
  - If TAUDnCMORm.TAUDnMD0 = 0, INTTAUDnIm is generated when TAUDnCNTm ≤ TAUDnCDRm.
  - If TAUDnCMORm.TAUDnMD0 = 1, INTTAUDnIm is generated when TAUDnCNTm > TAUDnCDRm.
- The TAUDnCMURm.TAUDnTIS[1:0] bits specify a type of width measurement:
  - For high width measurement (TAUDnCMURm.TAUDnTIS[1:0] = 11_B), TAUDnTTINm rising edge is used as a start edge and TAUDnTTINm falling edge as a stop edge.
  - For low width measurement (TAUDnCMURm.TAUDnTIS[1:0] = 10_B), TAUDnTTINm falling edge is used as a start edge and TAUDnTTINm rising edge as a stop edge.
- This function cannot make a forced restart.

23.12.12.2 Block Diagram and General Timing Diagram

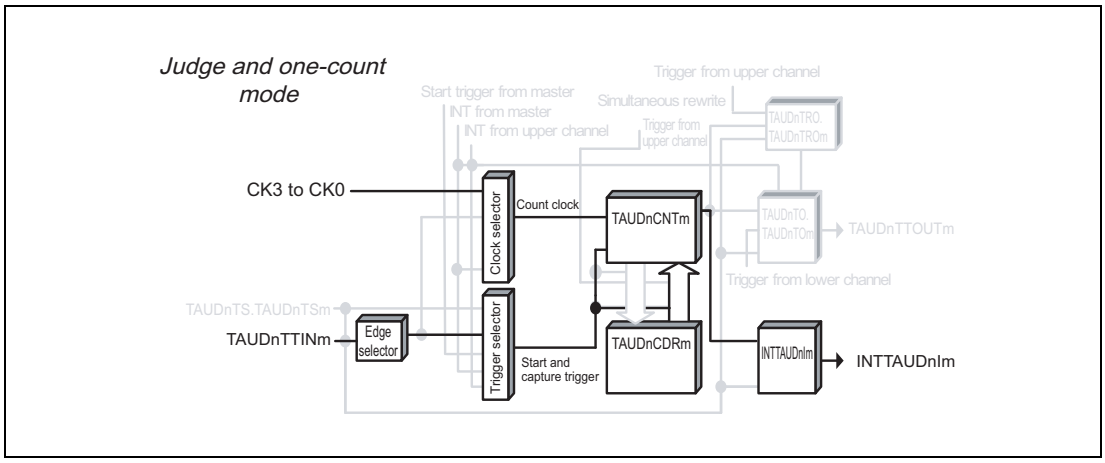

Figure 23.71 Block Diagram of TAUDnTTINm Input Signal Width Judgment Function

The following settings apply to the general timing diagram.

- INTTAUDnIm is generated when TAUDnCNTm ≤ TAUDnCDRm (TAUDnCMORm.TAUDnMD0 = 0)
- TAUDnTTINm valid start edge = rising edge, TAUDnTTINm valid stop edge = falling edge (TAUDnCMURm.TAUDnTIS[1:0] = 11_B)

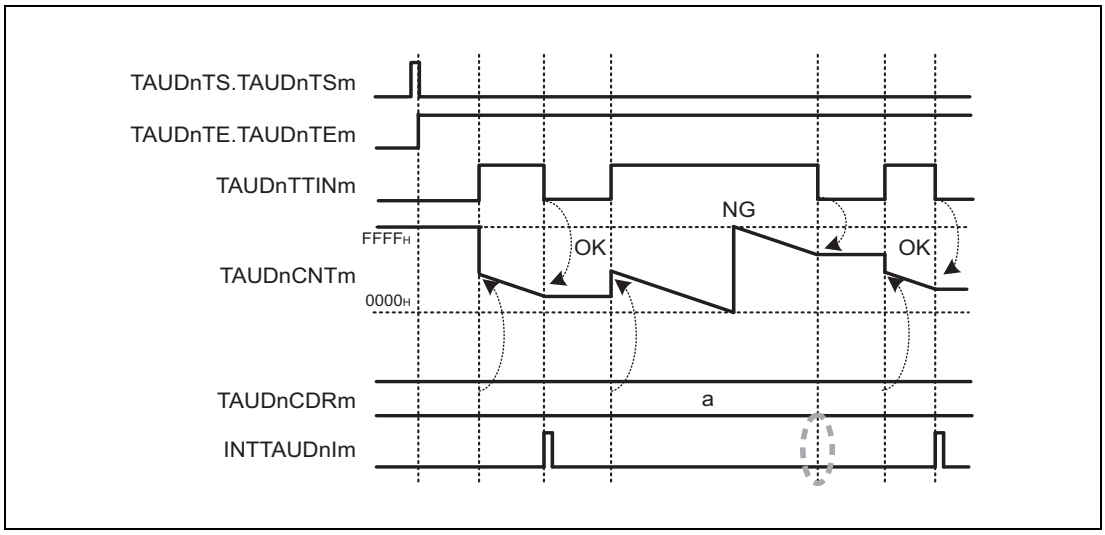

Figure 23.72 General Timing Diagram of TAUDnTTINm Input Signal Width Judgment Function

23.12.12.3 Register Settings

(1) TAUDnCMORm

Bit	15	14	13	12	11	10	9	8	7	6	5	4	3	2	1	0
	TAUDnCKS[1:0]		TAUDnCCS[1:0]		TAUDn MAS	TAUDnSTS[2:0]			TAUDnCOS[1:0]		—	TAUDnMD[4:1]				TAUDn MD0
Value after reset	0	0	0	0	0	0	0	0	0	0	0	0	0	0	0	0
R/W	R/W	R/W	R/W	R/W	R/W	R/W	R/W	R/W	R/W	R/W	R	R/W	R/W	R/W	R/W	R/W

Table 23.94 Contents of the TAUDnCMORm register for TAUDnTTINm Input Signal Width Judgment Function

Bit Position	Bit Name	Function
15, 14	TAUDnCKS[1:0]	Operating Clock Selection 00: Prescaler output CK0 01: Prescaler output CK1 10: Prescaler output CK2 11: Prescaler output CK3
13, 12	TAUDnCCS[1:0]	00: Uses an operating clock as a count clock
11	TAUDnMAS	0: Unused. Set to 0.
10 to 8	TAUDnSTS[2:0]	010: Valid edge of the TAUDnTTINm input signal is used as an external start trigger and the reverse edge as a stop trigger.
7, 6	TAUDnCOS[1:0]	0: Independent operation. Set to 0.
5	Reserved	When read, the value after reset is read. When writing, write the value after reset.
4 to 1	TAUDnMD[4:1]	0111: Judge and one-count mode
0	TAUDnMD0	0: INTTAUDnIm is generated when TAUDnCNTm ≤ TAUDnCDRm 1: INTTAUDnIm is generated when TAUDnCNTm > TAUDnCDRm

(2) TAUDnCMURm

Bit	7	6	5	4	3	2	1	0
	—	—	—	—	—	—	TAUDnTIS[1:0]	
Value after reset	0	0	0	0	0	0	0	0
R/W	R	R	R	R	R	R	R/W	R/W

Table 23.95 Contents of the TAUDnCMURm register for TAUDnTTINm Input Signal Width Judgment Function

Bit Position	Bit Name	Function
7 to 2	Reserved	When read, the value after reset is read. When writing, write the value after reset.
1, 0	TAUDnTIS[1:0]	10: Detection of rising and falling edges (low width measurement) 11: Detection of rising and falling edges (high width measurement)

(3) Channel output mode

TAUDnTOE.TAUDnTOEm is set to 0 because the channel output mode is not used with this function.

(4) Simultaneous rewrite

Simultaneous rewrite registers (TAUDnRDE, TAUDnRDS, TAUDnRDM, and TAUDnRDC) cannot be used with TAUDnTTINm input signal width judgment. Therefore, these registers should be set to 0.

Table 23.96 Simultaneous Rewrite Settings for TAUDnTTINm Input Signal Width Judgment Function

Bit Name	Setting
TAUDnRDE.TAUDnRDEm	0: Disables simultaneous rewrite
TAUDnRDS.TAUDnRDSm	0: When simultaneous rewrite is disabled (TAUDnRDE.TAUDnRDEm = 0), set these bits to 0
TAUDnRDM.TAUDnRDMm	
TAUDnRDC.TAUDnRDCm	

23.12.12.4 Operating Procedure for TAUDnTTINm Input Signal Width Judgment Function

Table 23.97 Operating Procedure for TAUDnTTINm Input Signal Width Judgment Function

	Operation	TAUDn Status
Initial Channel Setting	Set TAUDnCMORm and TAUDnCMURm registers as described in **Table 23.94, Contents of the TAUDnCMORm register for TAUDnTTINm Input Signal Width Judgment Function**, and **Table 23.95, Contents of the TAUDnCMURm register for TAUDnTTINm Input Signal Width Judgment Function**. Set the value of TAUDnCDRm register.	Channel operation is stopped.
Start Operation	Set TAUDnTS.TAUDnTSm to 1. TAUDnTS.TAUDnTSm is a trigger bit, which is automatically cleared to 0.	TAUDnTE.TAUDnTEm is set to 1 and TAUDnCNTm waits for detection of the TAUDnTTINm start edge.
During Operation	The following register can be changed at any time: • TAUDnCDRm register	Upon detection of a TAUDnTTINm start edge, TAUDnCNTm starts count down from the value of TAUDnCDRm. When TAUDnCMORm.TAUDnMD0 = 0 If TAUDnCNTm ≤ TAUDnCDRm when a INTTAUDnIm input stop edge is detected, INTTAUDnIm is generated. When TAUDnCMORm.TAUDnMD0 = 1 If TAUDnCNTm > TAUDnCDRm when a TAUDnTTINm input stop edge is detected, INTTAUDnIm is generated. Afterwards, this procedure is repeated.
Stop Operation	Set TAUDnTT.TAUDnTTm to 1. TAUDnTT.TAUDnTTm is a trigger bit, which is automatically cleared to 0.	TAUDnTE.TAUDnTEm is cleared to 0 and the counter stops. TAUDnCNTm stops and retains its current value.

Restart

23.12.13 One-Phase PWM Output Function

23.12.13.1 Overview

Summary

This function adds dead time to a TAUDnTTINm input signal. The resulting PWM signal is output via TAUDnTTOUTm of the channel and TAUDnTTOUTm of upper channels.

Prerequisites

- Each of two (or more) channels is enabled for dead time control (TAUDnTDE.TAUDnTDEm = 1).
- The operating mode for the lower channel should be set to one-count mode. (See **Table 23.99, Contents of the TAUDnCMORm register for the Lower Channel of the One-Phase PWM Output Function**.)
- Any operating mode can be set to upper channels.
- Channel output mode for upper and lower channels should be set to synchronous channel output mode 2 with one-phase PWN output. (See **Section 23.7, Channel Output Modes**.)

Functional description

The counter is enabled by setting the channel trigger bit (TAUDnTS.TAUDnTSm) to 1. This sets TAUDnTE.TAUDnTEm = 1, enabling count operation.

The counter starts when a valid TAUDnTTINm input start edge is detected. The value of TAUDnCDRm is loaded into TAUDnCNTm and the counter starts to count down from the TAUDnCDRm value.

When the counter reaches 0000_H, an interrupt occurs. The counter is reset to $FFFF_H$ and waits for the next valid TAUDnTTINm input start edge.

Table 23.98 TAUDnTTOUTm to which Dead Time is Added and State of TAUDnTTINm

TAUDnCMURm. TAUDnTIS[1:0]	TAUDnTOL. TAUDnTOLm	TAUDnTTOUTm to which Dead Time is Added	TAUDnTDL. TAUDnTDLm	TAUDnTTINm State When Added
10	0	TAUDnTTOUTm low	0	High
			1	Low
	1	TAUDnTTOUTm high	0	High
			1	Low
11	0	TAUDnTTOUTm low	0	Low
			1	High
	1	TAUDnTTOUTm high	0	Low
			1	High

Conditions

- TAUDnCMURm.TAUDnTIS[1:0] bits specify the type of width measurement:
  - TAUDnCMURm.TAUDnTIS[1:0] = 10_B: Uses both edges as valid edges for detection (Low width measurement).
  - TAUDnCMURm.TAUDnTIS[1:0] = 11_B: Uses both edges as valid edges for detection (High width measurement).
- The TAUDnTDL.TAUDnTDLm bit specifies the operation of TAUDnTTOUTm for each channel when an interrupt or valid TAUDnTTINm edge is detected on the lower channel:
  - If TAUDnTDL.TAUDnTDLm = 0, dead time to the positive-phase width (normal) is added.
  - If TAUDnTDL.TAUDnTDLm = 1, dead time to the negative-phase width (inverted) is added.
- This function cannot make a forced restart.

23.12.13.2 Block Diagram and General Timing Diagram

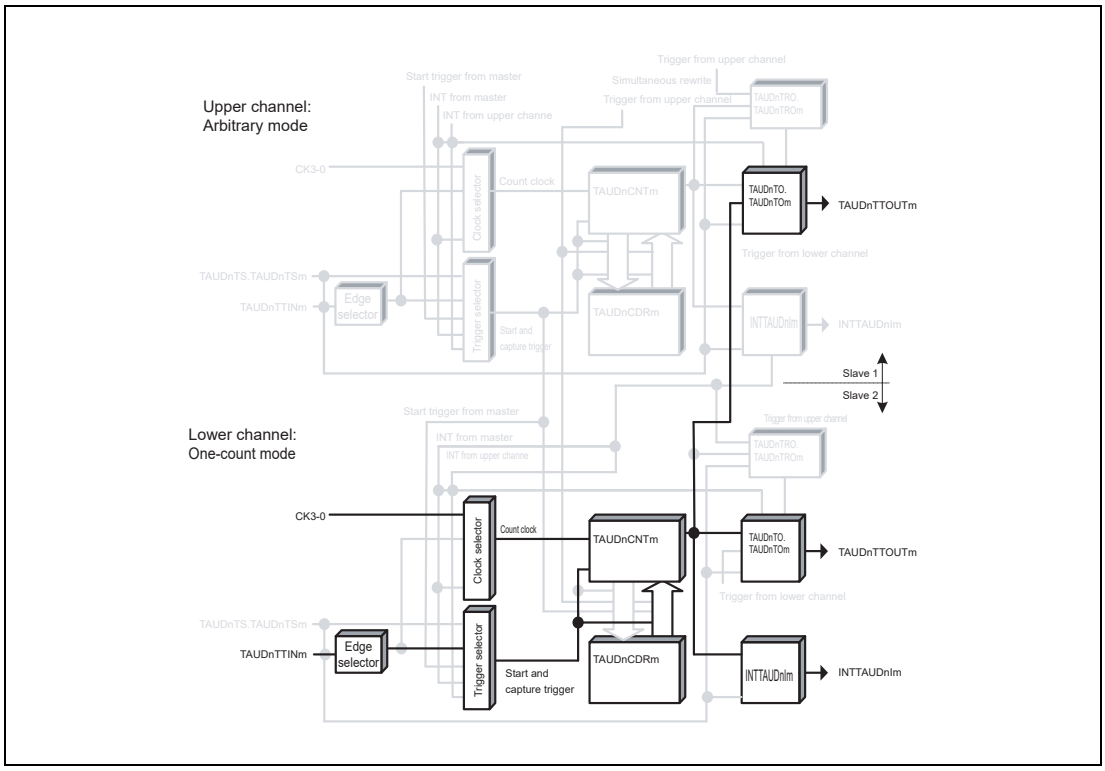

Figure 23.73 Block Diagram of One-Phase PWM Output Function

The following settings apply to the general timing diagram.

- Detection of rising and falling edges = high width measurement (TAUDnCMURm.TAUDnTIS[1:0] = 11_B)

This setting considers a duty as a high active.

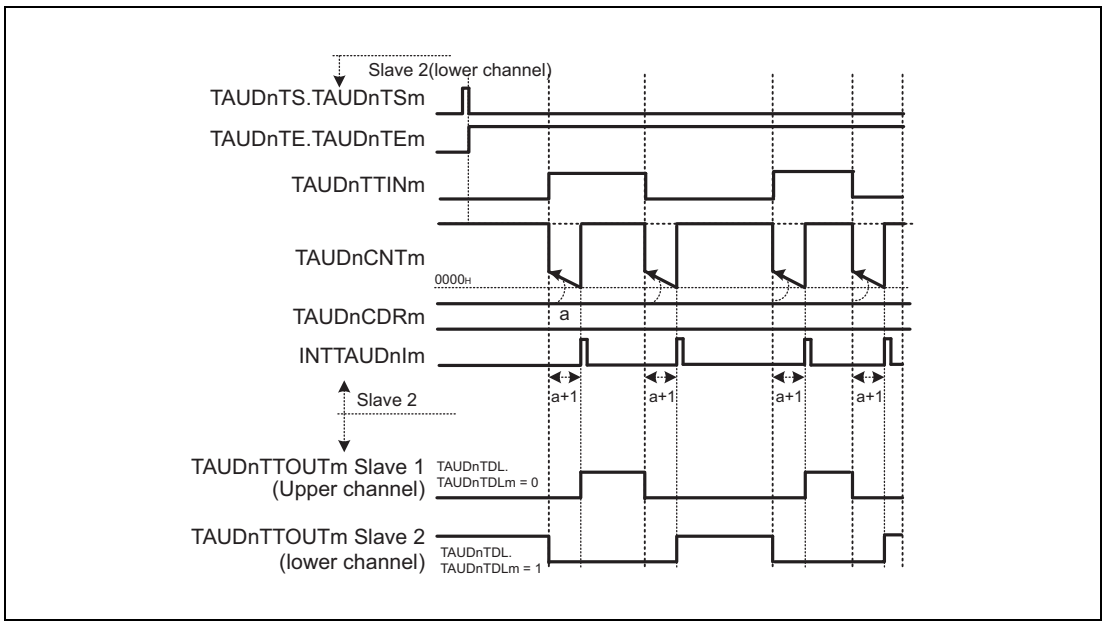

Figure 23.74 General Timing Diagram of One-Phase PWM Output Function

23.12.13.3 Register Settings for Lower Channels

(1) TAUDnCMORm for lower channels

Bit	15	14	13	12	11	10	9	8	7	6	5	4	3	2	1	0
	TAUDnCKS[1:0]		TAUDnCCS[1:0]		TAUDn MAS	TAUDnSTS[2:0]			TAUDnCOS[1:0]		—	TAUDnMD[4:1]				TAUDn MD0
Value after reset	0	0	0	0	0	0	0	0	0	0	0	0	0	0	0	0
R/W	R/W	R/W	R/W	R/W	R/W	R/W	R/W	R/W	R/W	R/W	R	R/W	R/W	R/W	R/W	R/W

Table 23.99 Contents of the TAUDnCMORm register for the Lower Channel of the One-Phase PWM Output Function

Bit Position	Bit Name	Function
15, 14	TAUDnCKS[1:0]	Operating Clock Selection 00: Prescaler output CK0 01: Prescaler output CK1 10: Prescaler output CK2 11: Prescaler output CK3
13, 12	TAUDnCCS[1:0]	00: Uses an operating clock as a count clock
11	TAUDnMAS	0: Unused. Set to 0.
10 to 8	TAUDnSTS[2:0]	001: Valid edge of the TAUDnTTINm input signal is used as an external start trigger.
7, 6	TAUDnCOS[1:0]	00: Unused. Set to 00.
5	Reserved	When read, the value after reset is read. When writing, write the value after reset.
4 to 1	TAUDnMD[4:1]	0100: One-count mode
0	TAUDnMD0	1: Enables start trigger detection while counting.

(2) TAUDnCMURm for lower channels

Bit	7	6	5	4	3	2	1	0
	—	—	—	—	—	—	TAUDnTIS[1:0]	
Value after reset	0	0	0	0	0	0	0	0
R/W	R	R	R	R	R	R	R/W	R/W

Table 23.100 Contents of the TAUDnCMURm register for the Lower Channel of the One-Phase PWM Output Function

Bit Position	Bit Name	Function
7 to 2	Reserved	When read, the value after reset is read. When writing, write the value after reset.
1, 0	TAUDnTIS[1:0]	10: Detection of rising and falling edges (low width measurement) 11: Detection of rising and falling edges (high width measurement)

(3) Channel output mode for lower channels

Table 23.101 Control Bit Settings in Synchronous Channel Output Mode 2 with One-Phase PWM Output

Bit Name	Setting
TAUDnTOE.TAUDnTOEm	1: Enables independent channel output mode
TAUDnTOM.TAUDnTOMm	1: Synchronous channel output
TAUDnTOC.TAUDnTOCm	1: Operating mode 2
TAUDnTOL.TAUDnTOLm	0: Positive logic 1: Negative logic
TAUDnTDE.TAUDnTDEm	1: Enables dead time operation.
TAUDnTDM.TAUDnTDMm	1: Adds dead time upon detection of a TAUDnTTINm input edge on a lower odd-numbered channel.
TAUDnTDL.TAUDnTDLm	0: Adds dead time to the positive-phase width (normal) 1: Adds dead time to the negative-phase width (inverted)
TAUDnTRE.TAUDnTREm	0: Disables real-time output
TAUDnTRO.TAUDnTROm	0: When real-time output is disabled (TAUDnTRE.TAUDnTREm = 0), set these bits to 0
TAUDnTRC.TAUDnTRCm	0: Operation as a real-time output trigger channel is prohibited.
TAUDnTME.TAUDnTMEm	0: Disables modulation

CAUTION

Set TAUDnTDL.TAUDnTDLm to upper channels exclusively.

(4) Simultaneous rewrite for lower channels

Simultaneous rewrite registers (TAUDnRDE, TAUDnRDS, TAUDnRDM, and TAUDnRDC) cannot be used with this function. Therefore, these registers should be set to 0.

Table 23.102 Simultaneous Rewrite Settings for One-Phase PWM Output Function

Bit Name	Setting
TAUDnRDE.TAUDnRDEm	0: Disables simultaneous rewrite
TAUDnRDS.TAUDnRDSm	0: When simultaneous rewrite is disabled (TAUDnRDE.TAUDnRDEm = 0), set these bits to 0
TAUDnRDM.TAUDnRDMm	
TAUDnRDC.TAUDnRDCm	

23.12.13.4 Register Settings for Upper Channels

(1) TAUDnCMORm for upper channels

TAUDnCMORm register for upper channels can be set arbitrarily.

(2) TAUDnCMURm for upper channels

TAUDnCMURm register for upper channels can be set arbitrarily.

(3) Channel output mode for upper channels

Table 23.103 Control Bit Settings for Upper Channels in Synchronous Channel Output Mode 2 with One-Phase PWM Output

Bit Name	Setting
TAUDnTOE.TAUDnTOEm	1: Enables independent channel output mode
TAUDnTOM.TAUDnTOMm	1: Synchronous channel output
TAUDnTOC.TAUDnTOCm	1: Operating mode 2
TAUDnTOL.TAUDnTOLm	0: Positive logic 1: Negative logic
TAUDnTDE.TAUDnTDEm	1: Enables dead time operation.
TAUDnTDM.TAUDnTDMm	1: Adds dead time upon detection of a TAUDnTTINm input edge on a lower odd-numbered channel.
TAUDnTDL.TAUDnTDLm	0: Adds dead time to the normal-phase width 1: Adds dead time to the inverted-phase width
TAUDnTRE.TAUDnTREm	0: Disables real-time output
TAUDnTRO.TAUDnTROm	0: When real-time output is disabled (TAUDnTRE.TAUDnTREm = 0), set these bits to 0
TAUDnTRC.TAUDnTRCm	0: Operation as a real-time output trigger channel is prohibited.
TAUDnTME.TAUDnTMEm	0: Disables modulation

CAUTION

Set TAUDnTDL.TAUDnTDLm to lower channels exclusively.

(4) Simultaneous rewrite for upper channels

Simultaneous rewrite register for upper channels can be set arbitrarily.

23.12.13.5 Operating Procedure for One-phase PWM Output Function

Table 23.104 Operating Procedure for One-phase PWM Output Function

		Operation	TAUDn Status
	Initial Channel Setting	Set TAUDnCMORm and TAUDnCMURm registers for the lower channel as described in **Table 23.99, Contents of the TAUDnCMORm register for the Lower Channel of the One-Phase PWM Output Function**, and **Table 23.100, Contents of the TAUDnCMURm register for the Lower Channel of the One-Phase PWM Output Function**. Set TAUDnCMORm and TAUDnCMURm registers for the upper channel as described in **Section 23.12.13.4, Register Settings for Upper Channels**. Set the value of TAUDnCDRm register. Set channel output mode by setting the control bits as described in **Table 23.101, Control Bit Settings in Synchronous Channel Output Mode 2 with One-Phase PWM Output**.	Channel operation is stopped.
Restart	Start Operation	Set TAUDnTOE.TAUDnTOEm (slave channels 1 and 2) to 1 (at restart time only). Set TAUDnTS.TAUDnTSm = 1 for slave channel 2. TAUDnTS.TAUDnTSm is a trigger bit, which is automatically cleared to 0. Detection of TAUDnTTINm start edge	TAUDnTE.TAUDnTEm is set to 1 (slave channel 2) and TAUDnCNTm waits for detection of TAUDnTTINm start edge. TAUDnCNTm loads TAUDnCDRm value.
	During Operation	The TAUDnCDRm register value can be changed at any time. The TAUDnCNTm register can be read at any time.	TAUDnCNTm of slave channel 2 counts down. When the counter reaches 0000_H: • INTTAUDnIm is generated. • TAUDnCNTm stops counting. TAUDnTTOUTm is changed by a TAUDnTTINm edge detection signal and slave channel 2 INTTAUDnIm signal to output one-phase PWM waveform with dead time. Afterwards, this operation is repeated.
	Stop Operation	Set TAUDnTT.TAUDnTTm = 1 for slave channel 2. TAUDnTT.TAUDnTTm is a trigger bit, which is automatically cleared to 0.	TAUDnTE.TAUDnTEm is cleared to 0 and the counter stops. TAUDnCNTm stops. TAUDnCNTm and TAUDnTTOUTm retain their current values.

23.12.14 Real Time Output Function Type 1

23.12.14.1 Overview

Summary

This function outputs a value of the TAUDnTRO.TAUDnTROm bit from TAUDnTTOUTm when a specified channel generates an interrupt (INTTAUDnIm). In this function, the interrupt is generated at certain specified intervals.

The upper channel is a channel which generates a real-time output trigger (TAUDnTRC.TAUDnTRCm = 1), and the lower channel is a channel which makes a real-time output in response to the upper channel trigger (TAUDnTRC.TAUDnTRCm = 0).

Prerequisites

- Channels should use the TAUDnTTOUTm control of other channels.
- The operating mode for the upper channel should be set to interval timer mode. (See **Table 23.105, Contents of the TAUDnCMORm register for the Upper Channel of Real-Time Output Function Type 1**.)
- Any operating mode can be set for lower channels.
- The channel output mode for all the channels should be set to independent channel output mode 1 with real-time output. (See **Section 23.7, Channel Output Modes**.)
- Real-time output should be enabled for the upper channel (TAUDnTRE.TAUDnTREm = 1).

Functional description

The counter of the upper channel is started by setting the channel trigger bit (TAUDnTS.TAUDnTSm) to 1. This in turn sets TAUDnTE.TAUDnTEm, enabling count operation. The current value of the data register of the upper channel (TAUDnCDRm) is loaded into the counter (TAUDnCNTm) and the counter starts to count down from this value.

When the counter of the upper channel reaches 0000_H, INTTAUDnIm is generated and TAUDnTTOUTm outputs the current value of the real-time output bit (TAUDnTRO.TAUDnTROm) of every channel (only channels with TAUDnTRE.TAUDnTREm = 1). TAUDnCNTm then reloads the TAUDnCDRm value to continue operation subsequently.

The TAUDnTTOUTm signal changes only when an interrupt is generated, and when its value is different to current value of TAUDnTRO.TAUDnTROm at the moment that the interrupt is generated.

Conditions

- The channel which is monitored for INTTAUDnIm occurrence is specified by setting TAUDnTRC.TAUDnTRCm to 1 for the corresponding channel. The TAUDnTRC.TAUDnTRCm bit should be 0 for all other channels.
- If real-time output of a lower channel is disabled (TAUDnTRE.TAUDnTREm = 0) or if the channel itself is used as a rewrite trigger (TAUDnTRC.TAUDnTRCm = 1), the value of that channel's TAUDnTRO.TAUDnTROm bit is output when INTTAUDnIm is generated in that channel.

- If real-time output of a lower channel is enabled (TAUDnTRE.TAUDnTREm = 1) and TAUDnTRC.TAUDnTRCm = 0, the value of that channel's TAUDnTRO.TAUDnTROm bit is output when INTTAUDnIm is generated in the upper channel.
- If the TAUDnCMORm.TAUDnMD0 bit is set to 0, the first interrupt after a start or restart is not output. For details, see **Section 23.9, TAUDnTTOUTm Output and INTTAUDnIm Generation when Counter Starts or Restarts**.

23.12.14.2 Equations

INTTAUDnIm generation cycle = count clock cycle × (TAUDnCDRm value + 1)

23.12.14.3 Block Diagram and General Timing Diagram

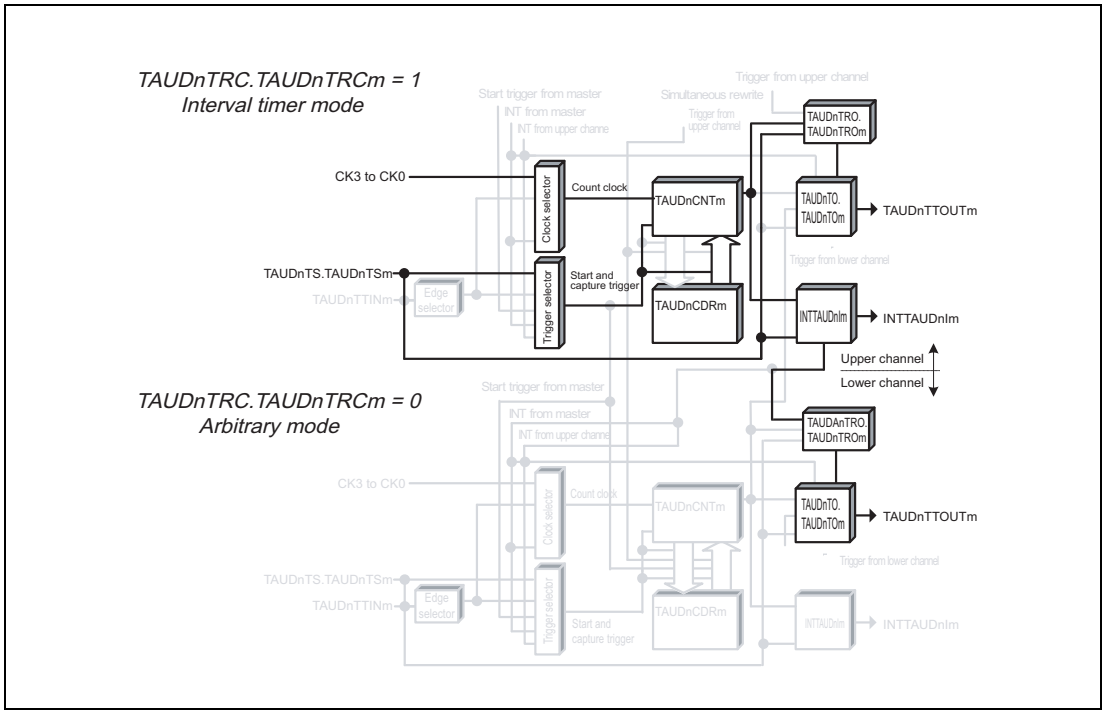

Figure 23.75 Block Diagram of Real-Time Output Function Type 1

The following settings apply to the general timing diagram.

- INTTAUDnIm generated at the beginning of operation. (TAUDnCMORm.TAUDnMD0 = 1)

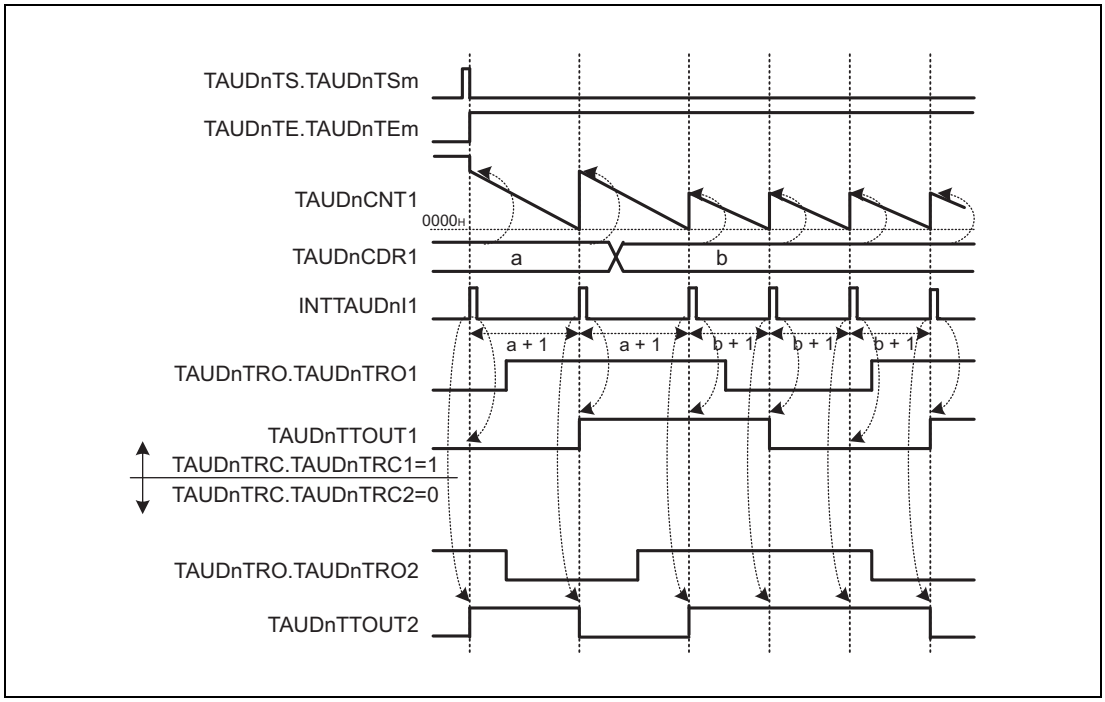

Figure 23.76 General Timing Diagram of Real-Time Output Function Type 1

23.12.14.4 Register Settings for Upper Channels

(1) TAUDnCMORm for upper channels

Bit	15	14	13	12	11	10	9	8	7	6	5	4	3	2	1	0
	TAUDnCKS[1:0]		TAUDnCCS[1:0]		TAUDn MAS	TAUDnSTS[2:0]			TAUDnCOS[1:0]		—	TAUDnMD[4:1]				TAUDn MD0
Value after reset	0	0	0	0	0	0	0	0	0	0	0	0	0	0	0	0
R/W	R/W	R/W	R/W	R/W	R/W	R/W	R/W	R/W	R/W	R/W	R	R/W	R/W	R/W	R/W	R/W

Table 23.105 Contents of the TAUDnCMORm register for the Upper Channel of Real-Time Output Function Type 1

Bit Position	Bit Name	Function
15, 14	TAUDnCKS[1:0]	Operating Clock Selection 00: Prescaler output CK0 01: Prescaler output CK1 10: Prescaler output CK2 11: Prescaler output CK3
13, 12	TAUDnCCS[2:0]	00: Uses an operating clock as a count clock
11	TAUDnMAS	0: Unused. Set to 0.
10 to 8	TAUDnSTS[2:0]	000: Trigger the counter using software.
7, 6	TAUDnCOS [1:0]	00: Unused. Set to 00.
5	Reserved	When read, the value after reset is read. When writing, write the value after reset.
4 to 1	TAUDnMD[4:1]	0000: Interval timer mode
0	TAUDnMD0	0: INTTAUDnIm not generated at the beginning of operation. 1: INTTAUDnIm generated at the beginning of operation.

(2) TAUDnCMURm for upper channels

Bit	7	6	5	4	3	2	1	0
	—	—	—	—	—	—	TAUDnTIS[1:0]	
Value after reset	0	0	0	0	0	0	0	0
R/W	R	R	R	R	R	R	R/W	R/W

Table 23.106 Contents of the TAUDnCMURm register for Upper Channel of Real-Time Output Function Type 1

Bit Position	Bit Name	Function
7 to 2	Reserved	When read, the value after reset is read. When writing, write the value after reset.
1, 0	TAUDnTIS[1:0]	00: Unused. Set to 00.

(3) Channel output mode for upper channels

Table 23.107 Control Bit Settings in Independent Channel Output Mode 1 with Real-Time Output

Bit Name	Setting
TAUDnTOE.TAUDnTOEm	1: Enables independent channel output mode
TAUDnTOM.TAUDnTOMm	0: Independent channel output
TAUDnTOC.TAUDnTOCm	0: Operating mode 1 (Toggle mode if TAUDnTOM.TAUDnTOMm = 0)
TAUDnTOL.TAUDnTOLm	0: Setting is disabled (value after reset) in toggle mode.
TAUDnTDE.TAUDnTDEm	0: Disables dead time operation
TAUDnTDM.TAUDnTDMm	0: When dead time operation is disabled (TAUDnTDE.TAUDnTDEm = 0), set these bits to 0
TAUDnTDL.TAUDnTDLm	
TAUDnTRE.TAUDnTREm	1: Enables real-time output.
TAUDnTRO.TAUDnTROm	0: Real-time output is low. 1: Real-time output is high.
TAUDnTRC.TAUDnTRCm	1: Channel m generates a unique real-time output trigger.
TAUDnTME.TAUDnTMEm	0: Disables modulation

(4) Simultaneous rewrite for upper channels

The simultaneous rewrite registers (TAUDnRDE, TAUDnRDS, TAUDnRDM, and TAUDnRDC) cannot be used with the real-time output function type 1. Therefore, these registers should be set to 0.

Table 23.108 Simultaneous Rewrite Settings for Real-Time Output Function Type 1

Bit Name	Setting
TAUDnRDE.TAUDnRDEm	0: Disables simultaneous rewrite
TAUDnRDS.TAUDnRDSm	0: When simultaneous rewrite is disabled (TAUDnRDE.TAUDnRDEm = 0), set these bits to 0
TAUDnRDM.TAUDnRDMm	
TAUDnRDC.TAUDnRDCm	

23.12.14.5 Register Settings for Lower Channels

(1) TAUDnCMORm for lower channels

The TAUDnCMORm register for lower channels is available for any setting.

(2) TAUDnCMURm for lower channels

The TAUDnCMURm register for lower channels is available for any setting.

(3) Channel output mode for lower channels

Table 23.109 Control Bit Settings for the Lower Channels in Independent Channel Output Mode 1 with Real-Time Output

Bit Name	Setting
TAUDnTOE.TAUDnTOEm	1: Enables independent channel output mode
TAUDnTOM.TAUDnTOMm	0: Independent channel output
TAUDnTOC.TAUDnTOCm	0: Operating mode 1 (Toggle mode if TAUDnTOM.TAUDnTOMm = 0)
TAUDnTOL.TAUDnTOLm	0: Setting is disabled (value after reset) in toggle mode.
TAUDnTDE.TAUDnTDEm	0: Disables dead time operation
TAUDnTDM.TAUDnTDMm	0: When dead time operation is disabled (TAUDnTDE.TAUDnTDEm = 0), set these bits to 0
TAUDnTDL.TAUDnTDLm	0: When dead time operation is disabled (TAUDnTDE.TAUDnTDEm = 0), set these bits to 0
TAUDnTRE.TAUDnTREm	1: Enables real-time output.
TAUDnTRO.TAUDnTROm	0: Real-time output is low. 1: Real-time output is high.
TAUDnTRC.TAUDnTRCm	0: Upper channel generates a real-time output trigger for channel m.
TAUDnTME.TAUDnTMEm	0: Disables modulation

(4) Simultaneous rewrite for lower channels

Simultaneous rewrite registers for lower channels can be set arbitrarily.

23.12.14.6 Operating Procedure for Real-Time Output Function Type 1

Table 23.110 Operating Procedure for Real-Time Output Function Type 1

	Operation	TAUDn Status
Initial Channel Setting	Set TAUDnCMORm and TAUDnCMURm registers for upper channels as described in **Table 23.105, Contents of the TAUDnCMORm register for the Upper Channel of Real-Time Output Function Type 1**, and **Table 23.106, Contents of the TAUDnCMURm register for Upper Channel of Real-Time Output Function Type 1**. Set TAUDnCMORm and TAUDnCMURm registers for lower channels as described in **Section 23.12.14.5, Register Settings for Lower Channels**. Set the value of TAUDnCDRm register (only channels with TAUDnTRC.TAUDnTRCm = 1) Set channel output mode by setting the control bits as described in **Table 23.107, Control Bit Settings in Independent Channel Output Mode 1 with Real-Time Output**. Set channel output mode by setting the control bits as described in **Table 23.109, Control Bit Settings for the Lower Channels in Independent Channel Output Mode 1 with Real-Time Output**.	Channel operation is stopped.
Start Operation	Set TAUDnTS.TAUDnTSm = 1 on the channel with TAUDnTRC.TAUDnTRCm set to 1. TAUDnTS.TAUDnTSm is a trigger bit, which is automatically cleared to 0.	[Channel with TAUDnTRC.TAUDnTRCm set to 1] TAUDnTE.TAUDnTEm is set to 1 and the counter starts. TAUDnCDRm value is loaded into TAUDnCNTm. If TAUDnCMORm.TAUDnMD0 is 1, INTTAUDnIm occurs.
During Operation	TAUDnCDRm and TAUDnTRO.TAUDnTROm can be changed at any time. The TAUDnCNTm register can be read at any time.	TAUDnCNTm counts down. When the counter reaches 0000_H: • The TAUDnCDRm value is loaded in TAUDnCNTm again and count operation continues. • INTTAUDnIm is generated. • TAUDnTTOUTm outputs the current value of the real-time output bit TAUDnTRO.TAUDnTROm. Afterwards, this procedure is repeated.
Stop Operation	Set TAUDnTT.TAUDnTTm to 1. TAUDnTT.TAUDnTTm is a trigger bit, which is automatically cleared to 0.	TAUDnTE.TAUDnTEm is cleared to 0 and the counter stops. TAUDnCNTm stops. Both TAUDnCNTm and TAUDnTTOUTm retain their current values.

Restart

23.12.14.7 Specific Timing Diagrams

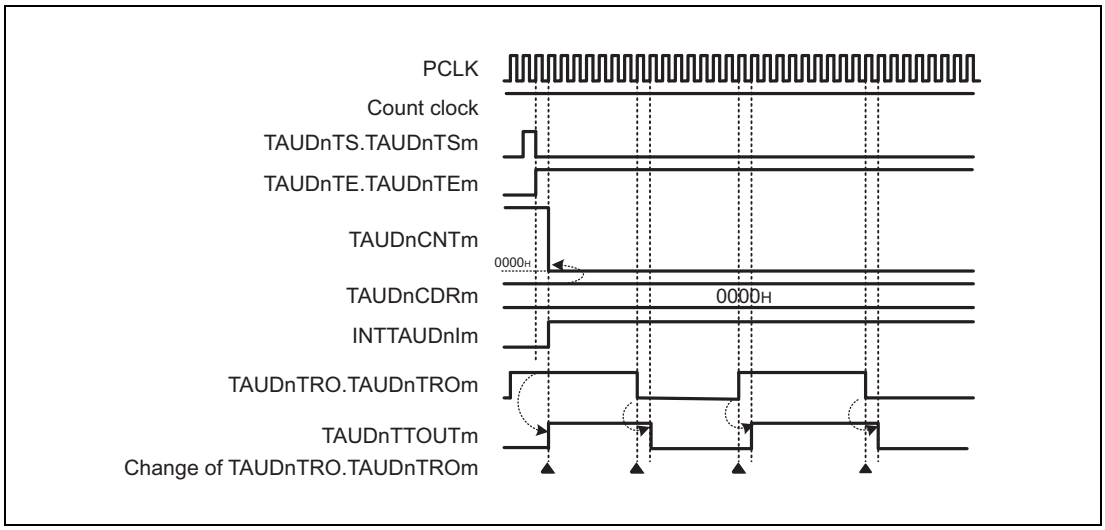

Figure 23.77 TAUDnCDRm = 0000_H, TAUDnCMORm.TAUDnMD0 = 1

23.12.15 Real-Time Output Function Type 2

23.12.15.1 Overview

Summary

This function outputs the value of TAUDnTRO.TAUDnTROm bit from TAUDnTTOUTm when a specified channel generates an interrupt (INTTAUDnIm). In this function, the interrupt is generated when a valid TAUDnTTINm input edge is detected or the function starts.

The upper channel is a channel which generates a real-time output trigger (TAUDnTRC.TAUDnTRCm = 1), and the lower channel is a channel which makes a real-time output in response to the upper channel trigger (TAUDnTRC.TAUDnTRCm = 0).

Prerequisites

- Channels should use the TAUDnTTOUTm control of the other channels
- The operating mode for the upper channel should be set to interval timer mode. (See **Table 23.111, Contents of the TAUDnCMORm register for the Upper Channel of Real-Time Output Function Type 2**.)
- Any operating mode can be set for lower channels.
- The channel output mode for all the channels should be set to independent channel output mode 1 with real-time output. (See **Section 23.7, Channel Output Modes**.)
- Real-time output should be enabled for the upper channel (TAUDnTRE.TAUDnTREm = 1).

Functional description

The counter for upper channels is started by setting the channel trigger bit (TAUDnTS.TAUDnTSm) to 1. This sets TAUDnTE.TAUDnTEm to 1, enabling count operation. The counter starts to count up.

When a valid TAUDnTTNm input edge is generated on one of upper channels, an interrupt occurs and TAUDnTTOUTm outputs the current value of the real-time output bit (TAUDnTRO.TAUDnTROm) of every channel (only channels with TAUDnTRE.TAUDnTREm = 1).

The TAUDnTTOUTm signal changes only when an interrupt is generated, and when TAUDnTTOUTm value is different to the current value of TAUDnTRO.TAUDnTROm during the occurrence of the interrupt.

Conditions

- The channel which is monitored for INTTAUDnIm occurrence is specified by setting TAUDnTRC.TAUDnTRCm to 1 for the corresponding channel. The TAUDnTRC.TAUDnTRCm bit should be 0 for all other channels.
- If real-time output of a lower channel is disabled (TAUDnTRE.TAUDnTREm = 0) or if the channel itself is used as a rewrite trigger (TAUDnTRC.TAUDnTRCm = 1), the value of that channel's TAUDnTRO.TAUDnTROm bit is output when INTTAUDnIm is generated in that channel.
- If real-time output of a lower channel is enabled (TAUDnTRE.TAUDnTREm = 1) and TAUDnTRC.TAUDnTRCm = 0, the value of that channel's TAUDnTRO.TAUDnTROm bit is output when INTTAUDnIm is generated in the upper channel.

- If the TAUDnCMORm.TAUDnMD0 bit is set to 0, the first interrupt after a start or restart is not output. For details, see **Section 23.9, TAUDnTTOUTm Output and INTTAUDnIm Generation when Counter Starts or Restarts**.

23.12.15.2 Block Diagram and General Timing Diagram

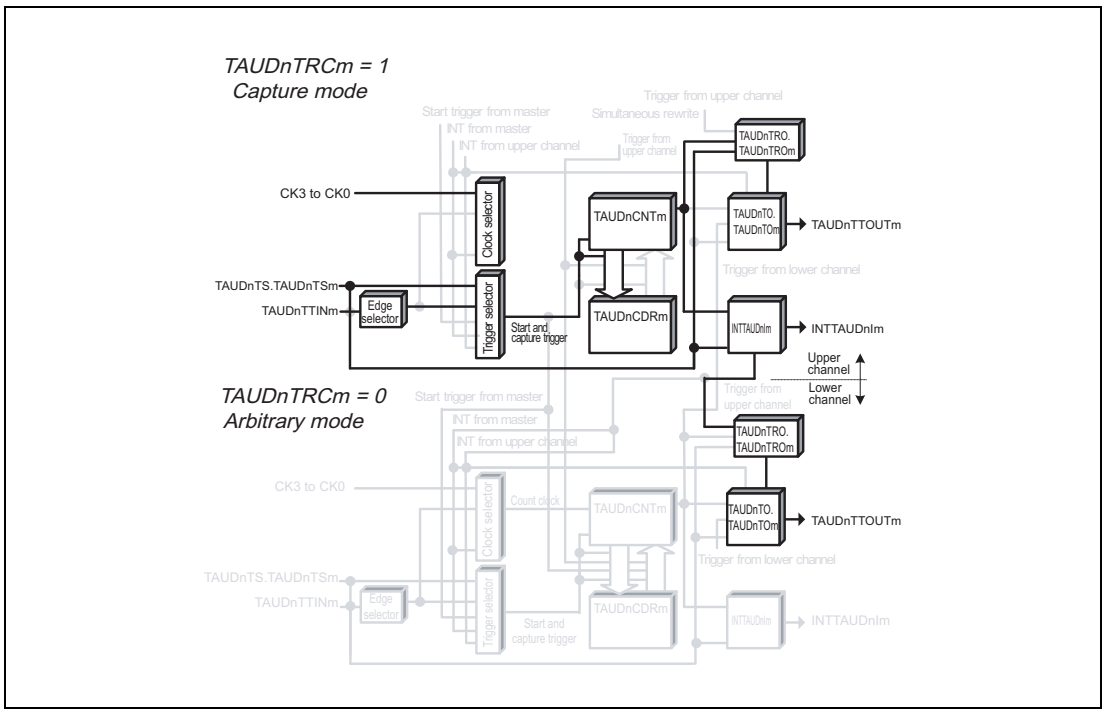

Figure 23.78 Block Diagram of Real-Time Output Function Type 2

The following settings apply to the general timing diagram.

- INTTAUDnIm not generated at the beginning of operation. (TAUDnCMORm.TAUDnMD0 = 0)

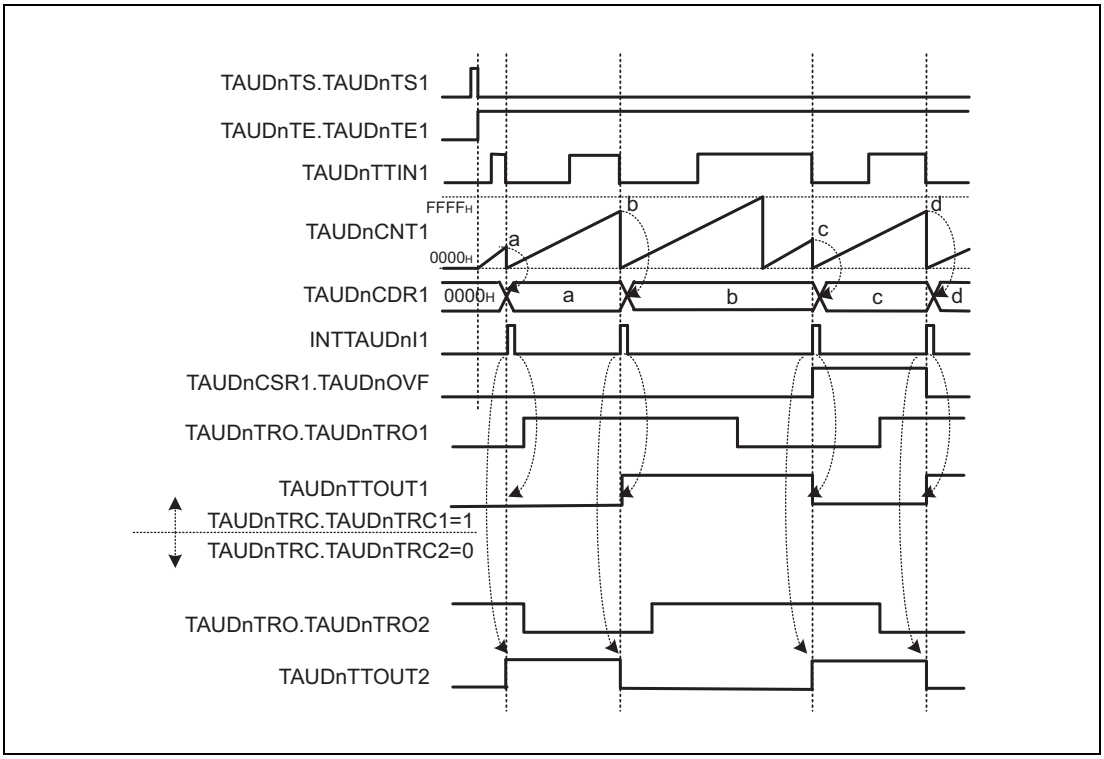

Figure 23.79 General Timing Diagram of Real-Time Output Function Type 2

23.12.15.3 Register Settings for Upper Channels

(1) TAUDnCMORm for upper channels

Bit	15	14	13	12	11	10	9	8	7	6	5	4	3	2	1	0
	TAUDnCKS[1:0]		TAUDnCCS[1:0]		TAUDn MAS	TAUDnSTS[2:0]			TAUDnCOS[1:0]		—	TAUDnMD[4:1]				TAUDn MD0
Value after reset	0	0	0	0	0	0	0	0	0	0	0	0	0	0	0	0
R/W	R/W	R/W	R/W	R/W	R/W	R/W	R/W	R/W	R/W	R/W	R	R/W	R/W	R/W	R/W	R/W

Table 23.111 Contents of the TAUDnCMORm register for the Upper Channel of Real-Time Output Function Type 2

Bit Position	Bit Name	Function
15, 14	TAUDnCKS[1:0]	Operating Clock Selection 00: Prescaler output CK0 01: Prescaler output CK1 10: Prescaler output CK2 11: Prescaler output CK3
13, 12	TAUDnCCS[1:0]	00: Uses an operating clock as a count clock
11	TAUDnMAS	0: Unused. Set to 0.
10 to 8	TAUDnSTS[2:0]	001: Valid edge of the TAUDnTTINm input signal is used as an external start trigger.
7, 6	TAUDnCOS[1:0]	00: Unused. Set to 00.
5	Reserved	When read, the value after reset is read. When writing, write the value after reset.
4 to 1	TAUDnMD[4:1]	0010: Capture mode
0	TAUDnMD0	0: INTTAUDnIm not generated at the beginning of operation. 1: INTTAUDnIm generated at the beginning of operation.

(2) TAUDnCMURm for upper channels

Bit	7	6	5	4	3	2	1	0
	—	—	—	—	—	—	TAUDnTIS[1:0]	
Value after reset	0	0	0	0	0	0	0	0
R/W	R	R	R	R	R	R	R/W	R/W

Table 23.112 Contents of the TAUDnCMURm register for the Upper Channel of Real-Time Output Function Type 2

Bit Position	Bit Name	Function
7 to 2	Reserved	When read, the value after reset is read. When writing, write the value after reset.
1, 0	TAUDnTIS[1:0]	00: Detection of falling edge 01: Detection of rising edge 10: Detection of rising and falling edges 11: Setting prohibited

(3) Channel output mode for upper channels

Table 23.113 Control Bit Settings in Independent Channel Output Mode 1 with Real-Time Output

Bit Name	Setting
TAUDnTOE.TAUDnTOEm	1: Enables independent channel output mode
TAUDnTOM.TAUDnTOMm	0: Independent channel output
TAUDnTOC.TAUDnTOCm	0: Operating mode 1 (Toggle mode if TAUDnTOM.TAUDnTOMm = 0)
TAUDnTOL.TAUDnTOLm	0: Setting is disabled (value after reset) in toggle mode.
TAUDnTDE.TAUDnTDEm	0: Disables dead time operation
TAUDnTDM.TAUDnTDMm	0: When dead time operation is disabled (TAUDnTDE.TAUDnTDEm = 0), set these bits to 0
TAUDnTDL.TAUDnTDLm	
TAUDnTRE.TAUDnTREm	1: Enables real-time output.
TAUDnTRO.TAUDnTROm	0: Real-time output is low. 1: Real-time output is high.
TAUDnTRC.TAUDnTRCm	1: Channel m generates a unique real-time output trigger.
TAUDnTME.TAUDnTMEm	0: Disables modulation

(4) Simultaneous rewrite for upper channels

The simultaneous rewrite registers (TAUDnRDE, TAUDnRDS, TAUDnRDM, and TAUDnRDC) cannot be used with the real-time output function type 2. Therefore, these registers should be set to 0.

Table 23.114 Simultaneous Rewrite Settings for Real-Time Output Function Type 2

Bit Name	Setting
TAUDnRDE.TAUDnRDEm	0: Disables simultaneous rewrite
TAUDnRDS.TAUDnRDSm	0: When simultaneous rewrite is disabled (TAUDnRDE.TAUDnRDEm = 0), set these bits to 0
TAUDnRDM.TAUDnRDMm	
TAUDnRDC.TAUDnRDCm	

23.12.15.4 Register Settings for Lower Channels

(1) TAUDnCMORm for lower channels

The TAUDnCMORm register for lower channels is available for any setting.

(2) TAUDnCMURm for lower channels

The TAUDnCMURm register for lower channels is available for any setting.

(3) Channel output mode for lower channels

Table 23.115 Control Bit Settings for Lower Channels in Independent Channel Output Mode 1 with Real-Time Output

Bit Name	Setting
TAUDnTOE.TAUDnTOEm	1: Enables independent channel output mode.
TAUDnTOM.TAUDnTOMm	0: Independent channel output
TAUDnTOC.TAUDnTOCm	0: Operating mode 1 (Toggle mode if TAUDnTOM.TAUDnTOMm = 0)
TAUDnTOL.TAUDnTOLm	0: Setting is disabled (value after reset) in toggle mode.
TAUDnTDE.TAUDnTDEm	0: Disables dead time operation.
TAUDnTDM.TAUDnTDMm	0: When dead time operation is disabled (TAUDnTDE.TAUDnTDEm = 0), set these bits to 0
TAUDnTDL.TAUDnTDLm	
TAUDnTRE.TAUDnTREm	1: Enables real-time output.
TAUDnTRO.TAUDnTROm	0: Real-time output is low. 1: Real-time output is high.
TAUDnTRC.TAUDnTRCm	0: Upper channel generates a real-time output trigger for channel m.
TAUDnTME.TAUDnTMEm	0: Disables modulation

(4) Simultaneous rewrite for lower channels

Simultaneous rewrite registers for lower channels can be set arbitrarily.

23.12.15.5 Operating Procedure for Real-Time Output Function Type 2

Table 23.116 Operating Procedure for Real-Time Output Function Type 2

	Operation	TAUDn Status
Initial Channel Setting	Set TAUDnCMORm and TAUDnCMURm registers for upper channels as described in **Table 23.111, Contents of the TAUDnCMORm register for the Upper Channel of Real-Time Output Function Type 2**, and **Table 23.112, Contents of the TAUDnCMURm register for the Upper Channel of Real-Time Output Function Type 2**. Set TAUDnCMORm and TAUDnCMURm registers for the lower channel as described in **Section 23.12.15.4, Register Settings for Lower Channels**. The TAUDnCDRm register functions as a capture register (the channel of TAUDnTRC.TAUDnTRCm = 1). Set channel output mode by setting the control bits as described in **Table 23.113, Control Bit Settings in Independent Channel Output Mode 1 with Real-Time Output**. Set channel output mode by setting the control bits as described in **Table 23.115, Control Bit Settings for Lower Channels in Independent Channel Output Mode 1 with Real-Time Output**.	Channel operation is stopped.
Start Operation	Set TAUDnTS.TAUDnTSm = 1 on the channel with TAUDnTRC.TAUDnTRCm set to 1. TAUDnTS.TAUDnTSm is a trigger bit, which is automatically cleared to 0.	[Channel with TAUDnTRC.TAUDnTRCm set to 1] TAUDnTE.TAUDnTEm is set to 1 and the counter starts. TAUDnCNTm is cleared to 0000_H. If TAUDnCMORm.TAUDnMD0 is 1, INTTAUDnIm occurs.
During Operation	TAUDnTRO.TAUDnTROm can be changed at any time.	TAUDnCNTm starts to count up from 0000_H. When a valid TAUDnTTINm input edge is detected: • Capture the value of TAUDnCDRm in TAUDnCNTm to clear the counter to 0000_H. • INTTAUDnIm is generated. • When TAUDTTINm input enable edge is detected, the TAUDnCSRm.TAUDnOVF bit is set to 1 if the detection is after an overflow, and is set to 0 if the detection is before an overflow. Afterwards, this procedure is repeated.
Stop Operation	Set TAUDnTT.TAUDnTTm to 1. TAUDnTT.TAUDnTTm is a trigger bit, which is automatically cleared to 0.	TAUDnTE.TAUDnTEm is cleared to 0 and the counter stops. TAUDnCNTm stops. TAUDnCNTm, TAUDnCSRm.TAUDnOVF, and TAUDnTTOUTm retain their current values.

Restart

23.12.15.6 Specific Timing Diagrams

(1) Operation start and stop

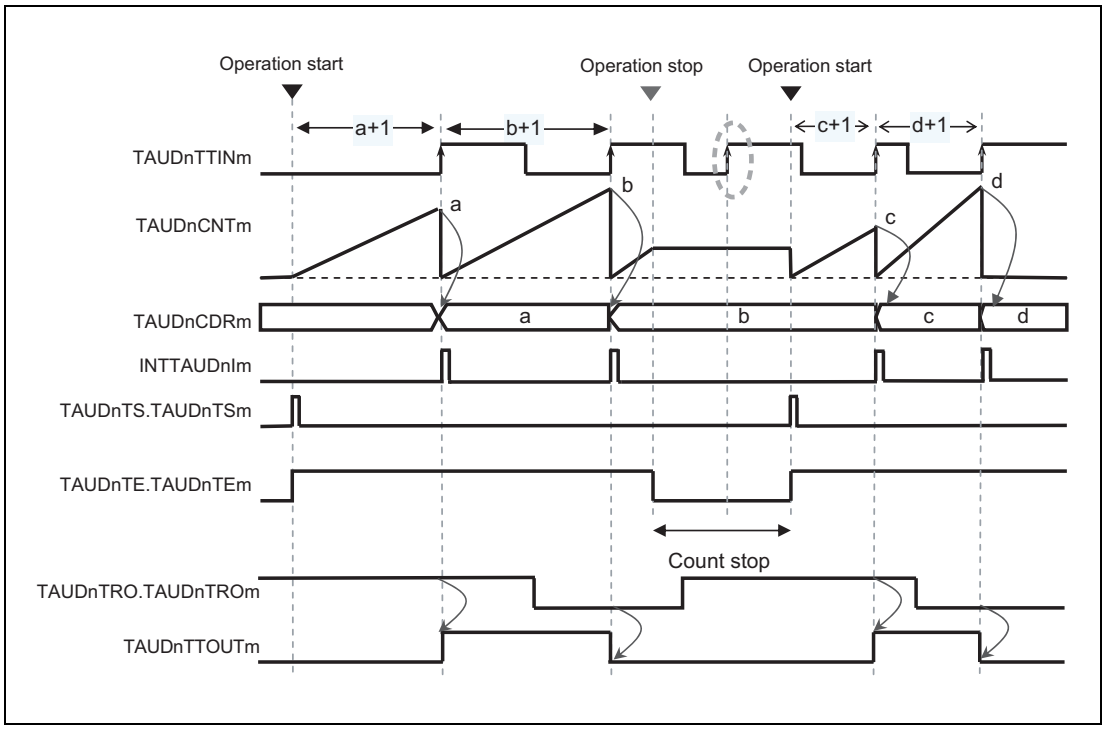

Figure 23.80 Operation Start and Stop (TAUDnCMORm.TAUDnMD0 = 0)

- When TAUDnTS.TAUDnTSm is set to 1, the counter starts counting up.
- When a valid input edge is detected, the current value of the counter is written to the data register (TAUDnCDRm) and an interrupt is generated.
- TAUDnTTOUTm outputs the current value of the real-time output bit (TAUDnTRO.TAUDnTROm) and the counter resets and starts to count up again.
- The TAUDnTTOUTm signal only changes when an interrupt is generated, and then only when its value is different to current value of TAUDnTRO.TAUDnTROm at the moment that the interrupt is generated.
- If the counter is stopped (TAUDnTE.TAUDnTEm is set to 0), valid input edges are ignored and no interrupt is generated.

23.12.16 Simultaneous Rewrite Trigger Generation Function Type 1

23.12.16.1 Overview

Summary

This function generates an interrupt on a specific channel that can be used by lower channels as a simultaneous rewrite trigger. The interrupt is generated at regular intervals.

The upper channel is a channel which generates a simultaneous rewrite trigger (TAUDnRDC.TAUDnRDCm = 1), and the lower channel is a channel which makes a simultaneous rewrite in response to the upper channel trigger (TAUDnRDC.TAUDnRDCm = 0).

Prerequisites

- Two or more channels lower than the channel used as upper channel are enabled for simultaneous rewrite (TAUDnRDE.TAUDnRDEm = 1).
- The operating mode for the upper channel should be set to interval timer mode. (See **Table 23.117, Contents of the TAUDnCMORm register for the Upper Channel of Simultaneous Rewrite Trigger Generation Function Type 1**.)
- For the operating mode that can be set for lower channels, see **Table 23.42, Channel Operation Functions and Methods They Use**.
- TAUDnTTOUTm is not used for any channel in this function.

Functional description

The counter operation is enabled by setting the channel trigger bits (TAUDnTS.TAUDnTSm) for upper and lower channels to 1. This sets TAUDnTE.TAUDnTEm = 1, enabling count operation. The current value of the data register buffer for upper channels (TAUDnCDRm buf) is loaded into the counter (TAUDnCNTm) and the counter starts to count down from this value. The counter for lower channels start to count according to the selected operating mode.

Once the counter reaches 0000_H, an interrupt occurs on the channel. The current value of the corresponding TAUDnCDRm buffer is loaded into TAUDnCNTm to continue operation subsequently.

If the channel where an interrupt occurs is specified as a trigger channel for simultaneous rewrite (TAUDnRDC.TAUDnRDCm = 1) and is an upper channel, simultaneous rewrite takes place on all lower channels in which simultaneous rewrite is currently possible (TAUDnRSF.TAUDnRSFm = 1).

The values of the data registers are copied to the corresponding data register buffers. Each time a counter starts to count down, it reads the value in the data register buffer and counts down from this value.

The value of a data register can be changed at any time, but it is only transferred to the corresponding data register buffer when simultaneous rewrite occurs.

Conditions

- The channel which is monitored for INTTAUDnIm occurrence is specified by setting TAUDnRDC.TAUDnRDCm = 1 for the corresponding channel. The TAUDnRDC.TAUDnRDCm bit should be 0 for all other channels in which simultaneous rewrite should take place.
- If the TAUDnCMORm.TAUDnMD0 bit is set to 0, the first interrupt after a start or restart is not generated. For details, see **Section 23.9, TAUDnTTOUTm Output and INTTAUDnIm Generation when Counter Starts or Restarts**.

23.12.16.2 Equations

Simultaneous rewrite trigger generation cycle = count clock cycle × (TAUDnCDRm + 1)

To control simultaneous rewrite, the following condition should be satisfied:

[PWM]

TAUDnCDRm = [(value of TAUDnCDRm of master channel subject to simultaneous rewrite + 1) × number of interrupts] – 1

[Triangle PWM]

TAUDnCDRm = [(value of TAUDnCDRm of master channel subject to simultaneous rewrite + 1) × 2 × number of interrupts] – 1

That is, the ratio of TAUDnCDRm + 1 and TAUDnCDRm_master + 1 should be an integer. This integer corresponds to the number of interrupts.

For triangle PWM, remember that the cycle doubles.

23.12.16.3 Block Diagram and General Timing Diagram

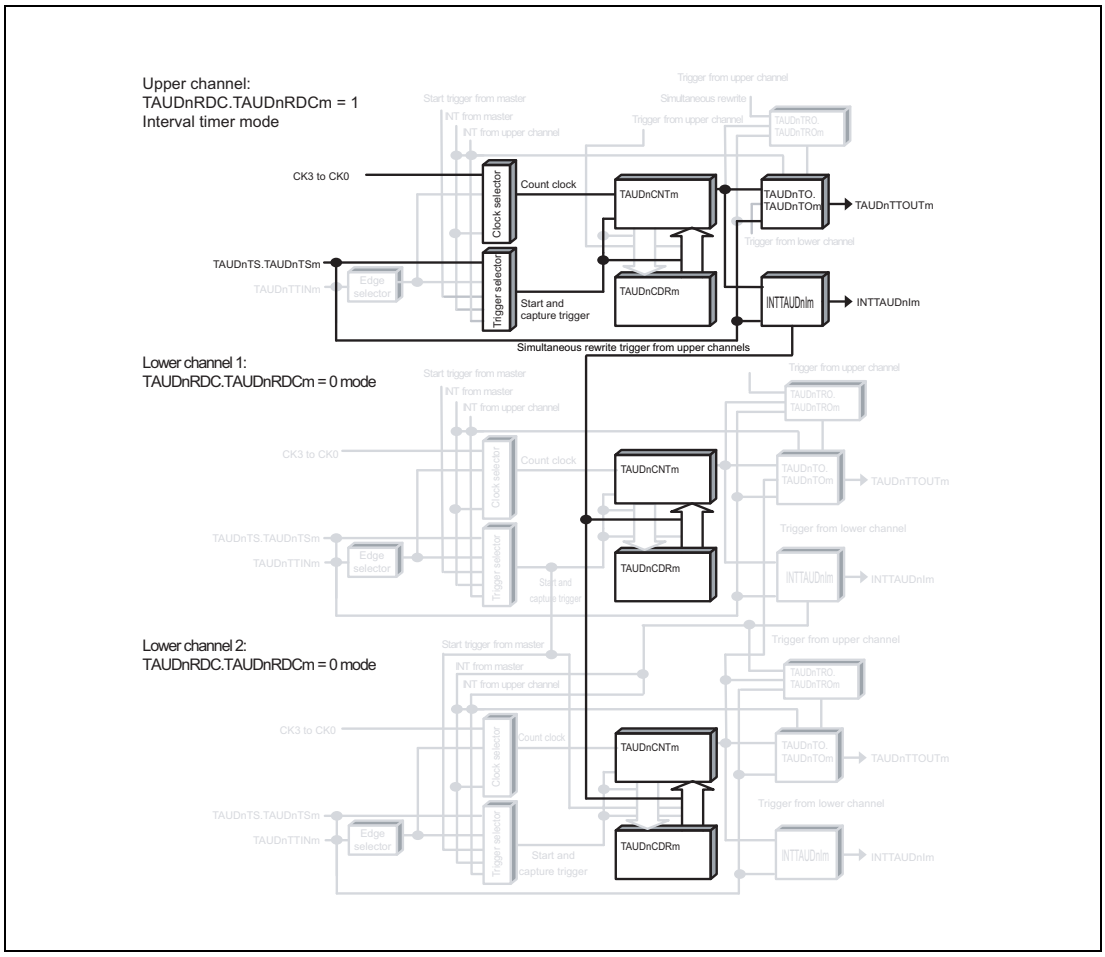

Figure 23.81 Block Diagram of Simultaneous Rewrite Trigger Generation Function Type 1

The following settings apply to the general timing diagram.

- INTTAUDnIm generated at the beginning of operation. (TAUDnCMORm.TAUDnMD0 = 1)

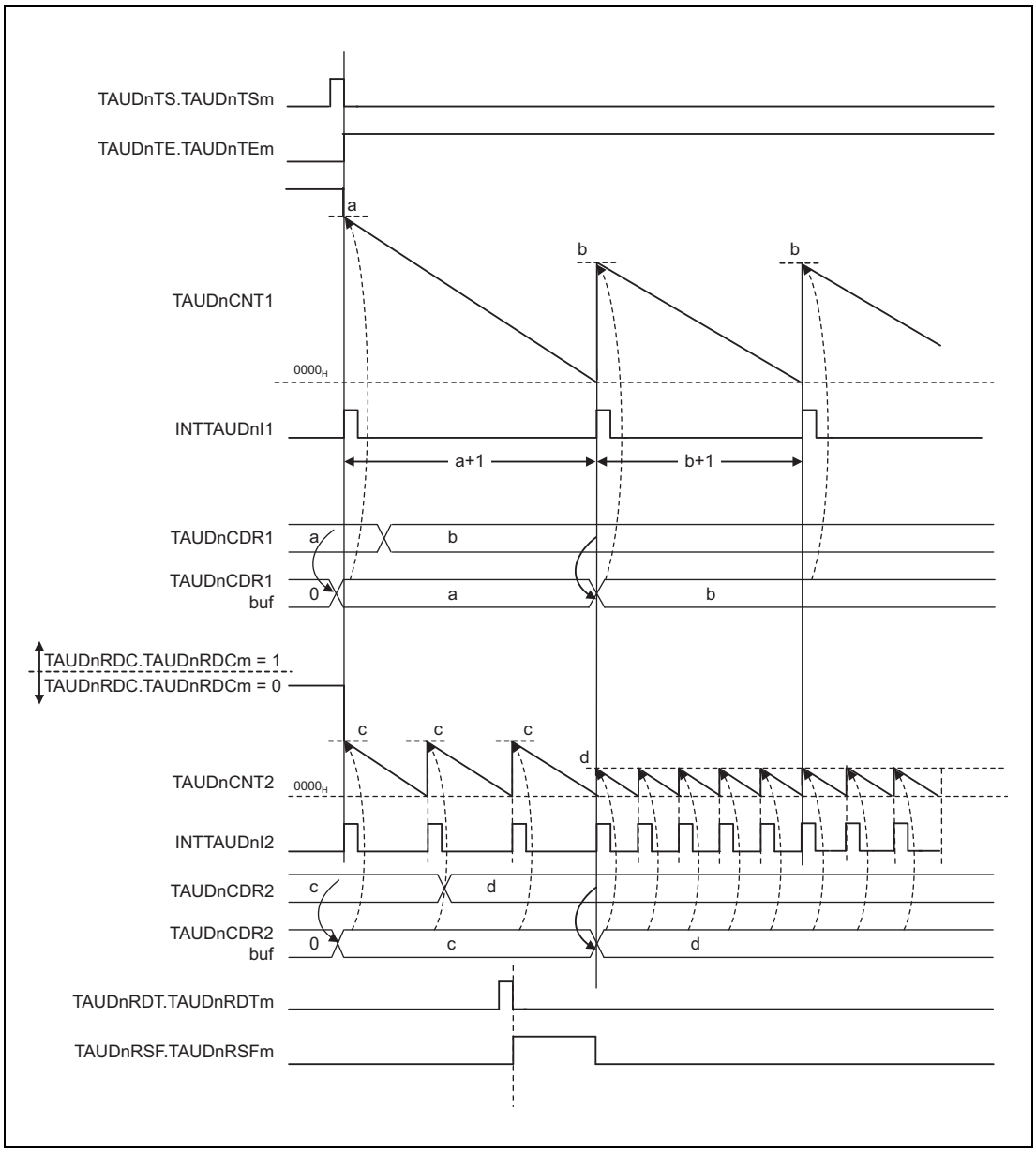

Figure 23.82 General Timing Diagram of Simultaneous Rewrite Trigger Generation Function Type 1

23.12.16.4 Register Settings for Upper Channels

(1) TAUDnCMORm for upper channels

Bit	15	14	13	12	11	10	9	8	7	6	5	4	3	2	1	0
	TAUDnCKS[1:0]		TAUDnCCS[1:0]		TAUDn MAS	TAUDnSTS[2:0]			TAUDnCOS[1:0]		—	TAUDnMD[4:1]				TAUDn MD0
Value after reset	0	0	0	0	0	0	0	0	0	0	0	0	0	0	0	0
R/W	R/W	R/W	R/W	R/W	R/W	R/W	R/W	R/W	R/W	R/W	R	R/W	R/W	R/W	R/W	R/W

Table 23.117 Contents of the TAUDnCMORm register for the Upper Channel of Simultaneous Rewrite Trigger Generation Function Type 1

Bit Position	Bit Name	Function
15, 14	TAUDnCKS[1:0]	Operating Clock Selection 00: Prescaler output CK0 01: Prescaler output CK1 10: Prescaler output CK2 11: Prescaler output CK3
13, 12	TAUDnCCS[1:0]	00: Uses an operating clock as a count clock
11	TAUDnMAS	0: Unused. Set to 0.
10 to 8	TAUDnSTS[2:0]	000: Trigger the counter using software.
7, 6	TAUDnCOS[1:0]	00: Unused. Set to 00.
5	Reserved	When read, the value after reset is read. When writing, write the value after reset.
4 to 1	TAUDnMD[4:1]	0000: Interval timer mode
0	TAUDnMD0	0: INTTAUDnIm not generated at the beginning of operation. 1: INTTAUDnIm generated at the beginning of operation.

(2) TAUDnCMURm for upper channels

Bit	7	6	5	4	3	2	1	0
	—	—	—	—	—	—	TAUDnTIS[1:0]	
Value after reset	0	0	0	0	0	0	0	0
R/W	R	R	R	R	R	R	R/W	R/W

Table 23.118 Contents of the TAUDnCMURm register for the Upper Channel of Simultaneous Rewrite Trigger Generation Function Type 1

Bit Position	Bit Name	Function
7 to 2	Reserved	When read, the value after reset is read. When writing, write the value after reset.
1, 0	TAUDnTIS[1:0]	00: Unused. Set to 00.

(3) Channel output mode for upper channels

TAUDnTOE.TAUDnTOEm is set to 0 because the channel output mode is not used with this function. However, this mode can be used in independent channel output mode controlled by software.

(4) Simultaneous rewrite for upper channels

Table 23.119 Simultaneous Rewrite Settings for Simultaneous Rewrite Trigger Generation Function Type 1

Bit Name	Setting
TAUDnRDE.TAUDnRDEm	1: Enables simultaneous rewrite.
TAUDnRDS.TAUDnRDSm	1: Selects one of upper channels as simultaneous rewrite control channel.
TAUDnRDM.TAUDnRDMm	0: Loads a simultaneous rewrite control signal when the master channel starts to count.
TAUDnRDC.TAUDnRDCm	1: Monitors INTTAUDnIm signal which triggers a simultaneous rewrite on the channel.

23.12.16.5 Register Settings for Lower Channels

(1) TAUDnCMORm for lower channels

TAUDnCMORm register for lower channels must follow the TAUDnCMORm register settings in the operating mode which can be set. (See **Table 23.42, Channel Operation Functions and Methods They Use**).

(2) TAUDnCMURm for lower channels

TAUDnCMURm register for lower channels must follow the TAUDnCMURm register settings in the operating mode which can be set. (See **Table 23.42, Channel Operation Functions and Methods They Use**)

(3) Channel output mode for lower channels

Output can be made according to the operating mode setting (master/slave) for lower channels. (For the functions for Simultaneous Rewrite Trigger Generation Function Type 1, see **Table 23.42, Channel Operation Functions and Methods They Use**).

(4) Simultaneous rewrite for lower channels

Table 23.120 Simultaneous Rewrite Settings for Lower Channels in Simultaneous Rewrite Trigger Generation Function Type 1

Bit Name	Setting
TAUDnRDE.TAUDnRDEm	1: Enables simultaneous rewrite.
TAUDnRDS.TAUDnRDSm	1: Selects one of upper channels as simultaneous rewrite control channel.
TAUDnRDM.TAUDnRDMm	0: Follow the setting of the TAUDnRDM.TAUDnRDMm in the configurable operating mode.
TAUDnRDC.TAUDnRDCm	0: Does not operate as a simultaneous rewrite trigger generation channel.

23.12.16.6 Operating Procedure for Simultaneous Rewrite Trigger Generation Function Type 1

Table 23.121 Operating Procedure for Simultaneous Rewrite Trigger Generation Function Type 1

	Operation	TAUDn Status
Initial Channel Setting	Set TAUDnCMORm and TAUDnCMURm registers for the upper channel as described in **Table 23.117, Contents of the TAUDnCMORm register for the Upper Channel of Simultaneous Rewrite Trigger Generation Function Type 1**, and **Table 23.118, Contents of the TAUDnCMURm register for the Upper Channel of Simultaneous Rewrite Trigger Generation Function Type 1**. Set TAUDnCMORm and TAUDnCMURm registers for lower channels as described in **Section 23.12.16.5, Register Settings for Lower Channels**. Set the value of TAUDnCDRm register.	Channel operation is stopped.
Start Operation	Set TAUDnTS.TAUDnTSm to 1. TAUDnTS.TAUDnTSm is a trigger bit, which is automatically cleared to 0.	TAUDnTE.TAUDnTEm is set to 1 and the counter starts. TAUDnCDRm value is loaded into TAUDnCNTm. If TAUDnCMORm.TAUDnMD0 = 1, INTTAUDnIm occurs.
During Operation	TAUDnRDT.TAUDnRDTm and TAUDnCDR.TAUDnCDRm is changeable. TAUDnRSF.TAUDnRSFm can be always read.	TAUDnCNTm counts down. When the counter reaches 0000_H: • The TAUDnCDRm value is loaded in TAUDnCNTm again and count operation continues. • INTTAUDnIm is generated. If INTAUDnIm occurs on the channel where TAUDnRDC.TAUDnRDCm is set to 1, simultaneous rewrite is controlled. Afterwards, this procedure is repeated.
Stop Operation	Set TAUDnTT.TAUDnTTm to 1. TAUDnTT.TAUDnTTm is a trigger bit, which is automatically cleared to 0.	TAUDnTE.TAUDnTEm is cleared to 0 and the counter stops. TAUDnCNTm stops and retains its current value.

Restart

23.13 Synchronous Channel Operation Functions

This section lists all the synchronous channel operation functions provided by the timer array unit D. For a general overview of synchronous channel operation, see **Section 23.2, Overview**

This section describes functions that generate PWM signals at regular intervals.

23.13.1 PWM Output Function

23.13.1.1 Overview

Summary

This function generates multiple PWM outputs by using a master and multiple slave channels. It enables the pulse cycle (frequency) and the duty cycle of the TAUDnTTOUTm to be set. The pulse cycle is set in the master channel. The duty cycle is set in the slave channel.

Prerequisites

- Two channels
- The operating mode for the master channel should be set to interval timer mode. (See **Table 23.122, Contents of the TAUDnCMORm register for the Master Channel of the PWM Output Function**.)
- The operating mode for the slave channels should be set to one count mode. (See **Table 23.125, Contents of the TAUDnCMORm register for the Slave Channel of the PWM Output Function**.)
- TAUDnTTOUTm is not used with the master channel of this function.
- The channel output mode for the slave channels should be set to Synchronous Channel Output Mode 1. (See **Section 23.7, Channel Output Modes**.)

Functional description

The counter is enabled by setting the channel trigger bit (TAUDnTS.TAUDnTSm) to 1. This sets TAUDnTE.TAUDnTEm = 1, enabling count operation. The current value of TAUDnCDRm is loaded into TAUDnCNTm, and the counter starts counting down from the TAUDnCDRm value. If an INTTAUDnIm occurs on the master channel and TAUDnTTOUTm (slave) is set/reset, PWM output is made.

- Master channel:
  When the master channel counter reaches 0000_H and the pulse cycle time has passed, INTTAUDnIm occurs. The counter loads TAUDnCDRm value into TAUDnCNTm and counts down.

- Slave channels:
  When INTTAUDnIm occurs on the master channel, the counter operation of the slave channel is triggered. The current value of TAUDnCDRm (slave) is loaded into TAUDnCNTm (slave) and the counter starts counting down from the TAUDnCDRm value. TAUDnTTOUTm signal is set to the active level.
  When the counter reaches to 0000_H (duty time has elapsed), INTTAUDnIm occurs and a TAUDnTTOUTm signal is set to an inactive level. The counter is reset to $FFFF_H$ and waits for the next INTTAUDnIm (start of the next pulse cycle) of the master channel.

The counter can stop operating by setting the TAUDnTT.TAUDnTTm of master and slave channels to 1. This sets TAUDnTE.TAUDnTEm to 0. TAUDnCNTm and TAUDnTTOUTm of master and slave channels stop but their values are retained. The counter can be restarted by setting TAUDnTS.TAUDnTSm to 1.

Conditions

Simultaneous rewrite can be used with this function. See **Section 23.6, Simultaneous Rewrite**.

23.13.1.2 Equations

Pulse cycle = (TAUDnCDRm (master) + 1) × count clock cycle

Duty cycle [%] = (TAUDnCDRm (slave) / (TAUDnCDRm (master) + 1) × 100

- Duty cycle = 0%
  TAUDnCDRm (slave) = 0000_H
- Duty cycle = 100%
  TAUDnCDRm (slave) ≥ TAUDnCDRm (master) + 1

23.13.1.3 Block Diagram and General Timing Diagram

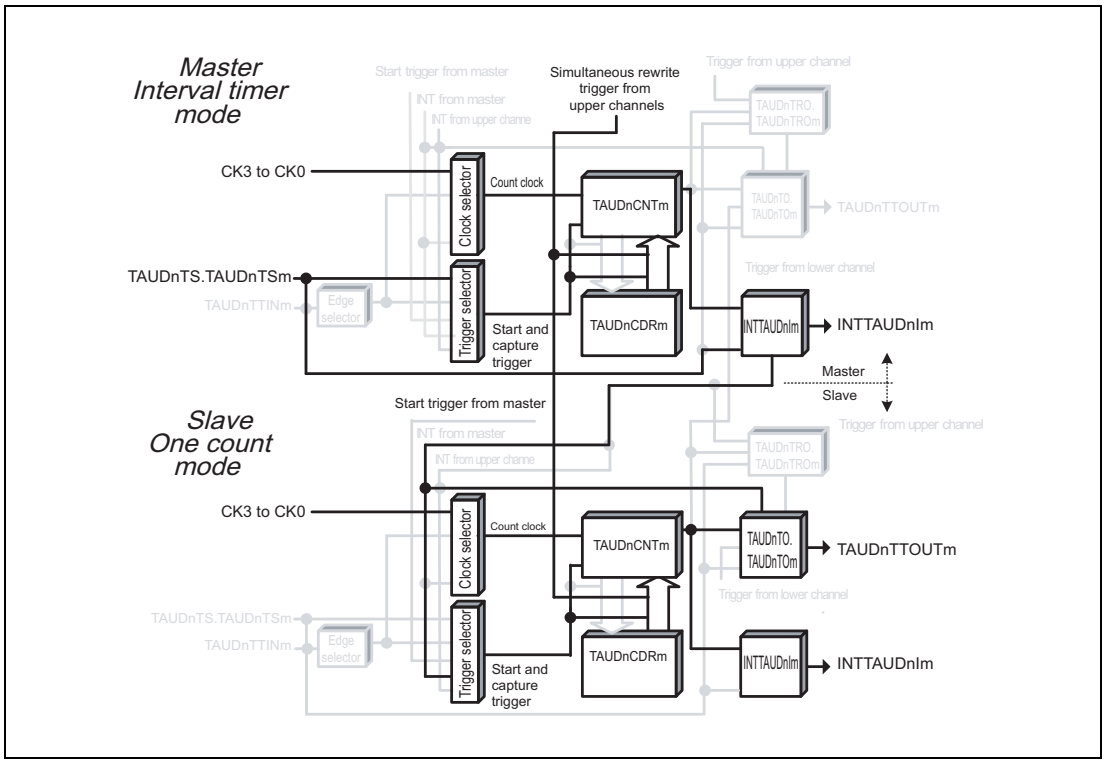

Figure 23.83 Block Diagram of PWM Output Function

The following settings apply to the general timing diagram.

- Slave channels: Positive logic (TAUDnTOL.TAUDnTOLm = 0)

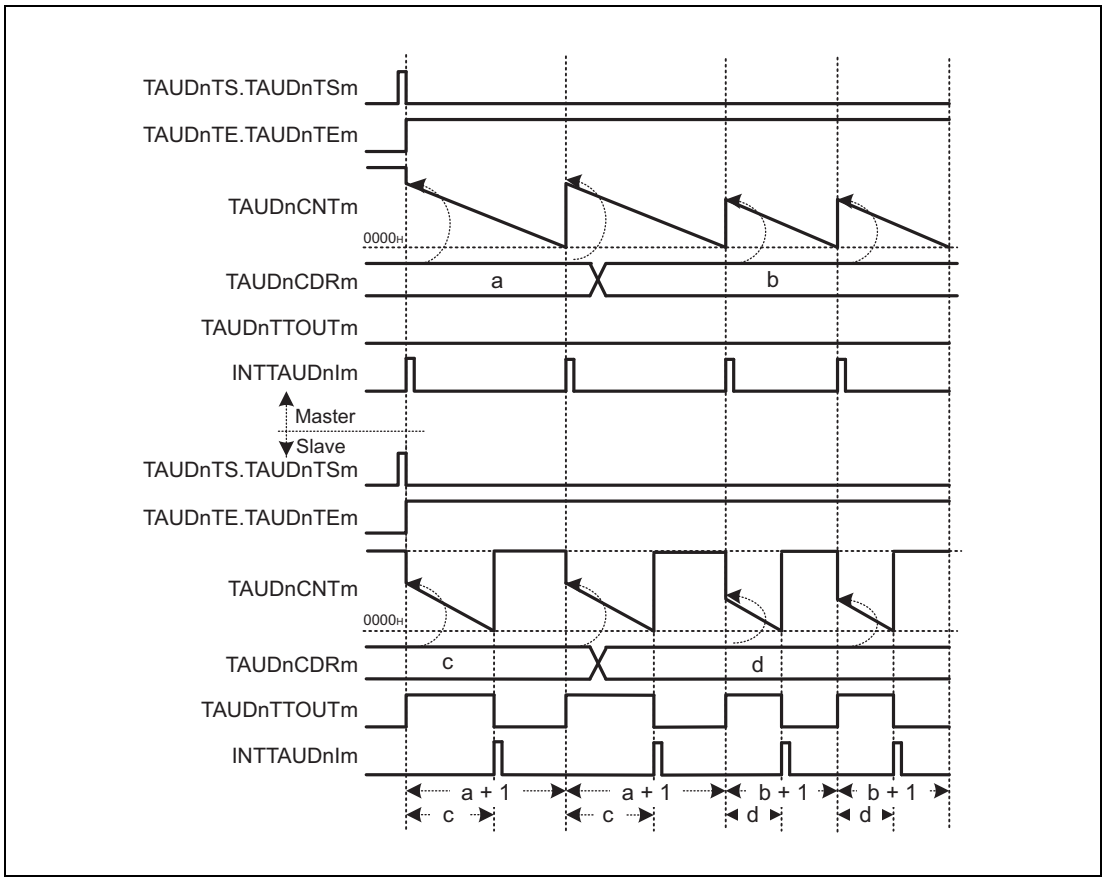

Figure 23.84 General Timing Diagram of PWM Output Function

NOTE

- The interval between the channel starting to count and an interrupt being generated is the value of corresponding TAUDnCDRm +1.
- The TAUDTTOUTm signal from slave channel rises 1 cycle of the counter clock after the rising edge of INTTAUDnIm from the master channel.

23.13.1.4 Register Settings for the Master Channel

(1) TAUDnCMORm for the master channel

Bit	15	14	13	12	11	10	9	8	7	6	5	4	3	2	1	0
	TAUDnCKS[1:0]		TAUDnCCS[1:0]		TAUDn MAS	TAUDnSTS[2:0]			TAUDnCOS[1:0]		—	TAUDnMD[4:1]				TAUDn MD0
Value after reset	0	0	0	0	0	0	0	0	0	0	0	0	0	0	0	0
R/W	R/W	R/W	R/W	R/W	R/W	R/W	R/W	R/W	R/W	R/W	R	R/W	R/W	R/W	R/W	R/W

Table 23.122 Contents of the TAUDnCMORm register for the Master Channel of the PWM Output Function

Bit Position	Bit Name	Function
15, 14	TAUDnCKS[1:0]	Operating Clock Selection 00: Prescaler output CK0 01: Prescaler output CK1 10: Prescaler output CK2 11: Prescaler output CK3 The value of the TAUDnCKS[1:0] bit of the master and slave channels must be identical.
13, 12	TAUDnCCS[1:0]	00: Uses an operating clock as a count clock
11	TAUDnMAS	1: Channel is master channel
10 to 8	TAUDnSTS[2:0]	000: Trigger the counter using software.
7, 6	TAUDnCOS[1:0]	00: Unused. Set to 00.
5	Reserved	When read, the value after reset is read. When writing, write the value after reset.
4 to 1	TAUDnMD[4:1]	0000: Interval timer mode
0	TAUDnMD0	1: INTTAUDnIm generated at the beginning of operation.

(2) TAUDnCMURm for the master channel

Bit	7	6	5	4	3	2	1	0
	—	—	—	—	—	—	TAUDnTIS[1:0]	
Value after reset	0	0	0	0	0	0	0	0
R/W	R	R	R	R	R	R	R/W	R/W

Table 23.123 Contents of the TAUDnCMURm register for the Master Channel of the PWM Output Function

Bit Position	Bit Name	Function
7 to 2	Reserved	When read, the value after reset is read. When writing, write the value after reset.
1, 0	TAUDnTIS[1:0]	00: Unused. Set to 00.

(3) Channel output mode for the master channel

The channel output mode is not used with this function. However, this mode can be used with another function or in independent channel output mode controlled by software.

(4) Simultaneous rewrite for the master channel

Both master and slave channels should have the same simultaneous rewrite settings.

Table 23.124 Simultaneous Rewrite Settings for the Master Channel of the PWM Output Function

Bit Name	Setting
TAUDnRDE.TAUDnRDEm	1: Enables simultaneous rewrite.
TAUDnRDS.TAUDnRDSm	0: Selects master channel for simultaneous rewrite triggers. 1: Selects upper channel other than the channel group for simultaneous rewrite triggers.
TAUDnRDM.TAUDnRDMm	0: Generates a simultaneous rewrite trigger signal when the master channel starts to count.
TAUDnRDC.TAUDnRDCm	0: Does not operate as a simultaneous rewrite trigger generation channel.

NOTE

Use with TAUDnRDS.TAUDnRDSm bit = 1 requires an upper channel higher than the master channel that operates with the **Section 23.12.16, Simultaneous Rewrite Trigger Generation Function Type 1**.

Conduct operation settings under the following conditions:

- Simultaneous rewrite trigger output function type 1 setting channel:
  TAUDnRDC.TAUDnRDCm=1, TAUDnRDS.TAUDnRDSm=1
  TAUDnCDRm settings for this channel are as follows:
  = ((TAUDnCDRm setting for the master channel targeted for simultaneous rewrite + 1) × interrupt count) - 1
- Master channels: TAUDnRDC.TAUDnRDCm=0, TAUDnRDS.TAUDnRDSm=1
- Slave channels: TAUDnRDC.TAUDnRDCm=0, TAUDnRDS.TAUDnRDSm=1

If TAUDnCDRm (slave) setting > TAUDnCDRm (master) setting + 1, the duty value (which exceeds 100%) is aggregated to be 100% output.

23.13.1.5 Register Settings for Slave Channels

(1) TAUDnCMORm for slave channels

Bit	15	14	13	12	11	10	9	8	7	6	5	4	3	2	1	0
	TAUDnCKS[1:0]		TAUDnCCS[1:0]		TAUDn MAS	TAUDnSTS[2:0]			TAUDnCOS[1:0]		—	TAUDnMD[4:1]				TAUDn MD0
Value after reset	0	0	0	0	0	0	0	0	0	0	0	0	0	0	0	0
R/W	R/W	R/W	R/W	R/W	R/W	R/W	R/W	R/W	R/W	R/W	R	R/W	R/W	R/W	R/W	R/W

Table 23.125 Contents of the TAUDnCMORm register for the Slave Channel of the PWM Output Function

Bit Position	Bit Name	Function
15, 14	TAUDnCKS[1:0]	Operating Clock Selection 00: Prescaler output CK0 01: Prescaler output CK1 10: Prescaler output CK2 11: Prescaler output CK3 The value of the TAUDnCKS[1:0] bit of the master and slave channels must be identical.
13, 12	TAUDnCCS[1:0]	00: Uses an operating clock as a count clock
11	TAUDnMAS	0: Slave channel
10 to 8	TAUDnSTS[2:0]	100: INTTAUDnIm of master channel is a start trigger.
7, 6	TAUDnCOS[1:0]	00: Unused. Set to 00.
5	Reserved	When read, the value after reset is read. When writing, write the value after reset.
4 to 1	TAUDnMD[4:1]	0100: One-count mode
0	TAUDnMD0	1: Start trigger during operation is valid.

(2) TAUDnCMURm for slave channels

Bit	7	6	5	4	3	2	1	0
	—	—	—	—	—	—	TAUDnTIS[1:0]	
Value after reset	0	0	0	0	0	0	0	0
R/W	R	R	R	R	R	R	R/W	R/W

Table 23.126 Contents of the TAUDnCMURm register for the Slave Channel of the PWM Output Function

Bit Position	Bit Name	Function
7 to 2	Reserved	When read, the value after reset is read. When writing, write the value after reset.
1, 0	TAUDnTIS[1:0]	00: Unused. Set to 00.

(3) Channel output mode for slave channels

Table 23.127 Control Bit Settings in Independent Channel Output Mode 1

Bit Name	Setting
TAUDnTOE.TAUDnTOEm	1: Enables independent channel output mode
TAUDnTOM.TAUDnTOMm	1: Synchronous channel operation
TAUDnTOC.TAUDnTOCm	0: Operating mode 1
TAUDnTOL.TAUDnTOLm	0: Positive logic 1: Negative logic
TAUDnTDE.TAUDnTDEm	0: Disables dead time operation
TAUDnTDM.TAUDnTDMm	0: When dead time operation is disabled (TAUDnTDE.TAUDnTDEm = 0), set these bits to 0
TAUDnTDL.TAUDnTDLm	
TAUDnTRE.TAUDnTREm	0: Disables real-time output
TAUDnTRO.TAUDnTROm	0: When real-time output is disabled (TAUDnTRE.TAUDnTREm = 0), set these bits to 0
TAUDnTRC.TAUDnTRCm	
TAUDnTME.TAUDnTMEm	0: Disables modulation

(4) Simultaneous rewrite for slave channels

Both master and slave channels should have the same simultaneous rewrite settings.

Table 23.128 Simultaneous Rewrite Settings for Slave Channels of PWM Output Function

Bit Name	Setting
TAUDnRDE.TAUDnRDEm	1: Enables simultaneous rewrite.
TAUDnRDS.TAUDnRDSm	0: Selects master channel for simultaneous rewrite triggers. 1: Selects upper channel other than the channel group for simultaneous rewrite triggers.
TAUDnRDM.TAUDnRDMm	0: Generates a simultaneous rewrite trigger signal when the master channel starts to count.
TAUDnRDC.TAUDnRDCm	0: Does not operate as a simultaneous rewrite trigger generation channel.

23.13.1.6 Operating Procedure for PWM Output Function

Table 23.129 Operating Procedure for PWM Output Function

	Operation	TAUDn Status
Initial Channel Setting	Master channels: Set TAUDnCMORm/ TAUDnCMURm register and the channel output mode as described in **Section 23.13.1.4, Register Settings for the Master Channel**. Slave channels: Set TAUDnCMORm/ TAUDnCMURm register and the channel output mode as described in **Section 23.13.1.5, Register Settings for Slave Channels**. Set the value of TAUDnCDRm register of every channel.	Channel operation is stopped.
Start Operation	Set TAUDnTS.TAUDnTSm of master and slave channels to 1 simultaneously. TAUDnTS.TAUDnTSm is a trigger bit, which is automatically cleared to 0.	TAUDnTE.TAUDnTEm (master and slave channels) is set to 1 and the counters of master and slave channels start. INTTAUDnIm is generated on the master channel and TAUDnTTOUTm (slave) is set.
During operation	TAUDnCDRm can be changed at any time. TAUDnTOL.TAUDnTOLm can be changed. TAUDnCNTm and TAUDnRSF.TAUDnRSFm can be read at any time. TAUDnRDT.TAUDnRDTm can be changed during operation.	TAUDnCNTm of master channel loads TAUDnCDRm value and counts down. When the counter reaches 0000_H: • INTTAUDnIm (master) occurs. • TAUDnCDRm value is loaded into TAUDnCNTm (master) to continue count operation. • TAUDnCDRm value is loaded into TAUDnCNTm (slave) to perform counting down. • TAUDnTTOUTm (slave) is set to the active level. If TAUDnCNTm (slave) reaches 0000_H: • INTTAUDnIm (slave) occurs. • TAUDnTTOUTm (slave) is set to an inactive level. Count operation of the slave channel stops.
Stop Operation	Set TAUDnTT.TAUDnTTm of master and slave channels to 1 simultaneously. TAUDnTT.TAUDnTTm is a trigger bit, which is automatically cleared to 0.	TAUDnTE.TAUDnTEm is cleared to 0 and the counter stops. TAUDnCNTm and TAUDnTTOUTm stop and retain their current values.

Restart

23.13.1.7 Specific Timing Diagrams

(1) Duty cycle = 0%

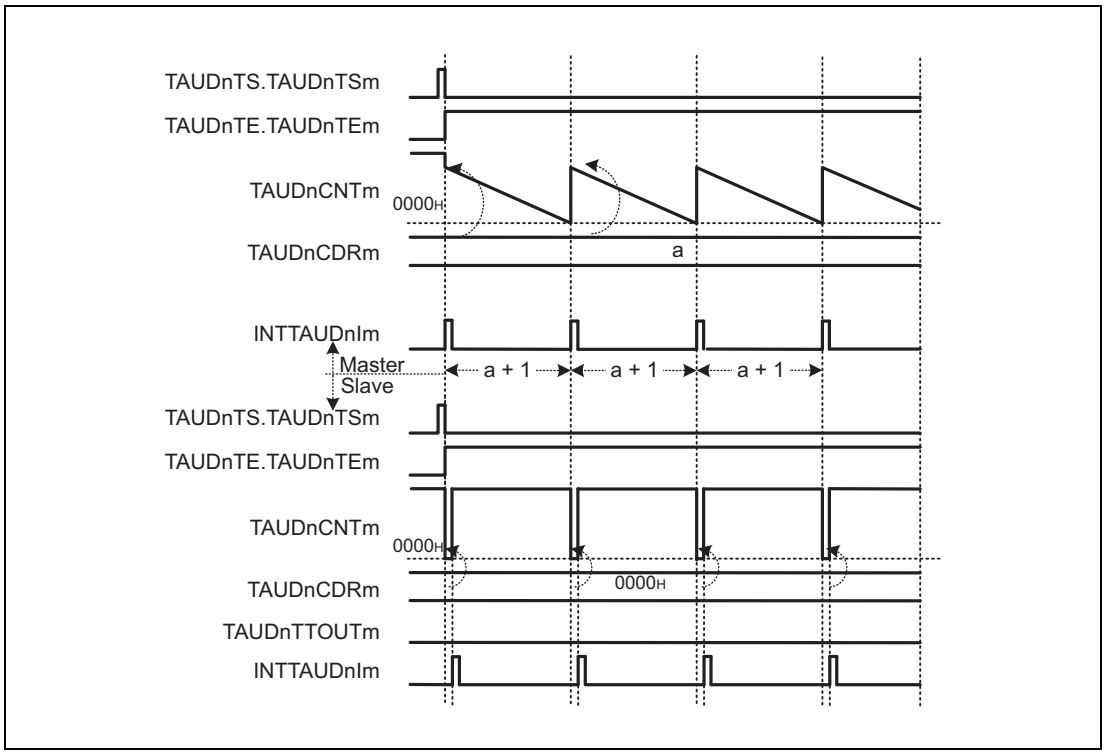

Figure 23.85 TAUDnCDRm (Slave) = 0000_H, Positive Logic (TAUDnTOL.TAUDnTOLm (Slave) = 0)

- Every time the master channel generates an interrupt (INTTAUDnIm), 0000_H is loaded in to TAUDnCNTm (slave). Therefore, an interrupt (INTTAUDnIm) of the slave channel occurs simultaneously and TAUDnTTOUTm remains inactive.
- TAUDnCDRm value is loaded into TAUDnCNTm (slave) to generate an interrupt.

(2) Duty cycle = 100%

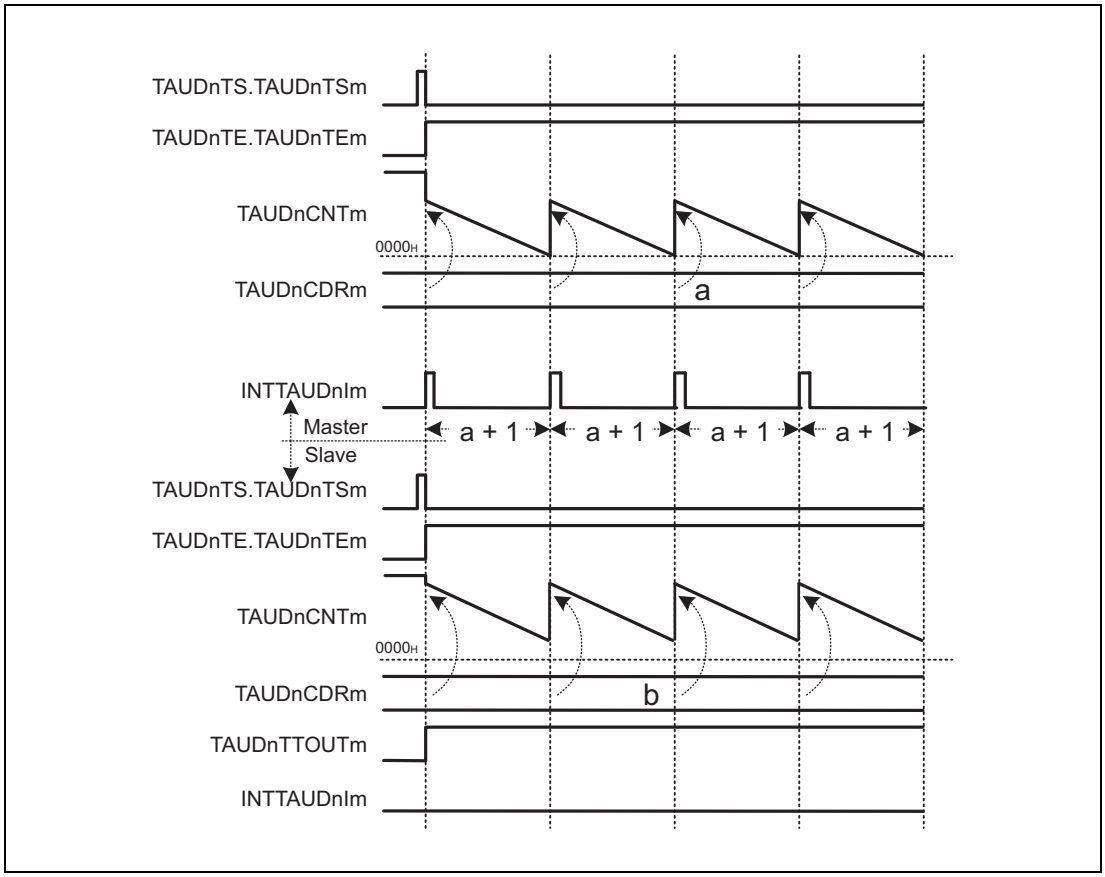

Figure 23.86 TAUDnCDRm (Slave) ≥ TAUDnCDRm (Master) + 1 Positive Logic (TAUDnTOL.TAUDnTOLm (Slave) = 0)

- If TAUDnCDRm (slave) value is greater than TAUDnCDRm (master) value, the slave channel counter does not reach 0000_H and consequently, no interrupt occurs. TAUDnTTOUTm remains active.

(3) Operation stop and restart

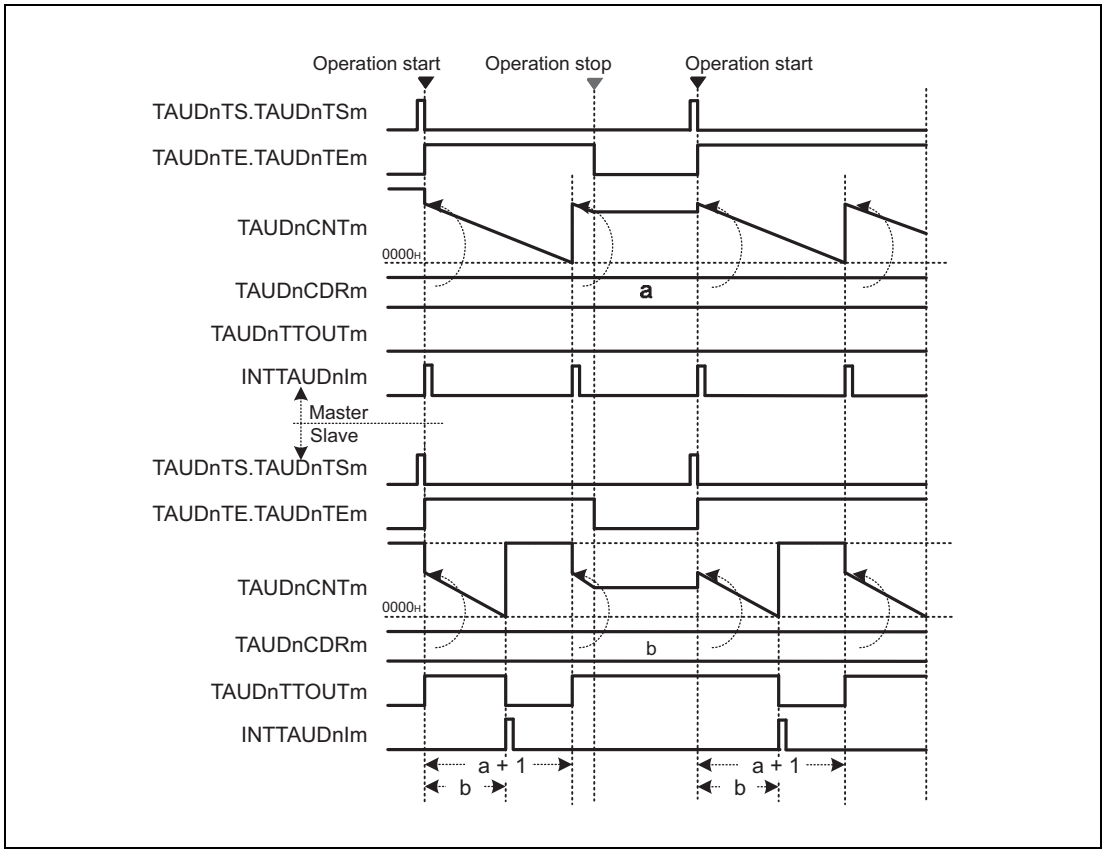

Figure 23.87 Operation Stop and Restart
Positive Logic (TAUDnTOL.TAUDnTOLm (Slave) = 0)

- The counter can be stopped by setting TAUDnTT.TAUDnTTm of master and slave channels to 1. This sets TAUDnTE.TAUDnTEm to 0.
- TAUDnCNTm and TAUDnTTOUTm of all channels stop and the current values are retained. No interrupts are generated.
- The counter can be restarted by setting TAUDnTS.TAUDnTSm of master and slave channels to 1. TAUDnCNTm of master and slave channels reload the current values of TAUDnCDRm and start to count down from these values.

23.13.2 One-Shot Pulse Output Function

23.13.2.1 Overview

Summary

This function outputs a signal pulse with a specific pulse width and delay time (both defined relative to an external input signal pulse or software trigger) by using a master and a slave channel. The delay time is specified using the master channel. The pulse width is specified using the slave channel.

Prerequisites

- Two channels
- The operating mode for the master channel should be set to one-count mode. (See **Table 23.130, Contents of the TAUDnCMORm register for the Master Channel of the One-Shot Pulse Output Function**.)
- The operating mode for slave channels should be set to pulse one-count mode. (See **Table 23.133, Contents of the TAUDnCMORm register for the Slave Channel of the One-Shot Pulse Output Function**.)
- TAUDnTTOUTm is not used with the master channel of this function.
- The channel output mode for the slave channel sh
- ould be set to independent channel output mode 2. (See **Section 23.7, Channel Output Modes**.)
- TAUDnTTINm (master) has to be detected while TAUDnCNTm (master) and TAUDnCNTm (slave) await a trigger. Furthermore, the slave is only triggered by an interrupt from the master channel and not by TAUDnTTINm (slave).
- When using only the software trigger, do not select TAUDnTTINm with the alternative function of the pins.

Functional description

The counters are enabled by setting the channel trigger bits of the master channel and slave channel (TAUDnTS.TAUDnTSm) to 1. This sets TAUDnTE.TAUDnTEm, enabling count operation.

- Master channel:
  When the next valid TAUDnTTINm input edge or software trigger (when TAUDnTE.TAUDnTEm = 1, TAUDnTS.TAUDnTSm = 1 (m: master channel number)) is detected, the current value of TAUDnCDRm is loaded into TAUDnCNTm. The counter starts to count down from this value. If TAUDnCMORm.TAUDnMD0 = 0, a trigger (TAUDnTTINm) which is detected within the delay time is ignored.
  When the counter of master channel reaches 0000_H, INTTAUDnIm is generated. The counter is reset to $FFFF_H$ and waits for the next valid TAUDnTTINm input edge or software trigger (when TAUDnTE.TAUDnTEm = 1, TAUDnTS.TAUDnTSm = 1 (m: master channel number)).
- Slave channels:
  INTTAUDnIm generated on master channel triggers the counter operation of slave channel. The current value of TAUDnCDRm (slave) is loaded into TAUDnCNTm (slave). The counter starts counting down from this value. An interrupt occurs and the TAUDnTTOUTm signal is set. When the counter reaches 0001_H, INTTAUDnIm is generated and TAUDnTTOUTm signal is reset. The counter stops at 0000_H and waits for the next INTTAUDnIm of master channel.

The counter can be stopped by setting TAUDnTT.TAUDnTTm of master and slave channels to 1. This sets TAUDnTE.TAUDnTEm to 0. TAUDnCNTm and TAUDnTTOUTm of master and slave channels stop but their values are retained. The counter can be restarted by setting TAUDnTS.TAUDnTSm to 1.

Conditions

- If TAUDnCMORm.TAUDnMD0 of master channel is set to 0, TAUDnTTINm input edges detected during counting are ignored.
- Simultaneous rewrite can be used with this function. See **Section 23.6, Simultaneous Rewrite**.

23.13.2.2 Equations

Delay from trigger input to pulse output = (TAUDnCDRm (master) + 1) × count clock cycle

Pulse width = (TAUDnCDRm (slave)) × count clock cycle

23.13.2.3 Block Diagram and General Timing Diagram

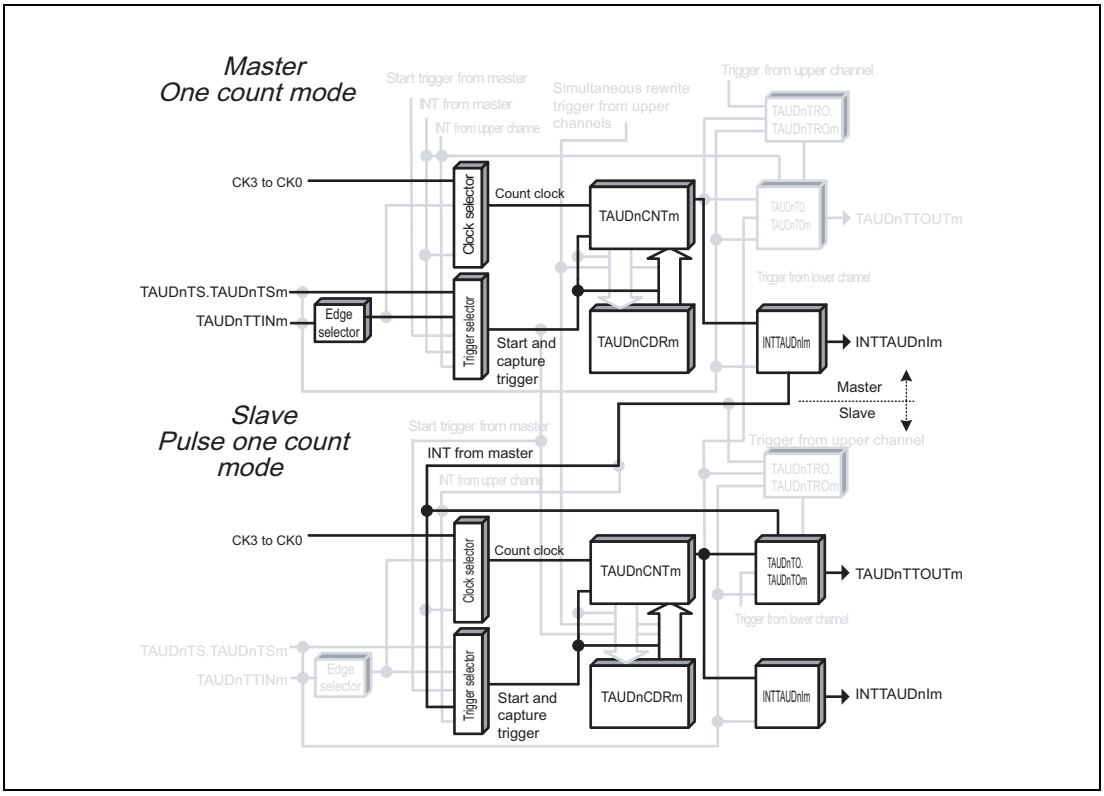

Figure 23.88 Block Diagram of One-Shot Pulse Output Function

The following settings apply to **Figure 23.89, General Timing Diagram of One-Shot Pulse Output Function (External Input Signal)** and **Figure 23.90, General Timing Diagram of One-Shot Pulse Output Function (Software Trigger)**.

- Start trigger detection is disabled during counting (TAUDnCMORm.TAUDnMD0 = 0)
- Detection of falling edge (TAUDnCMURm.TAUDnTIS[1:0] = 00_B)

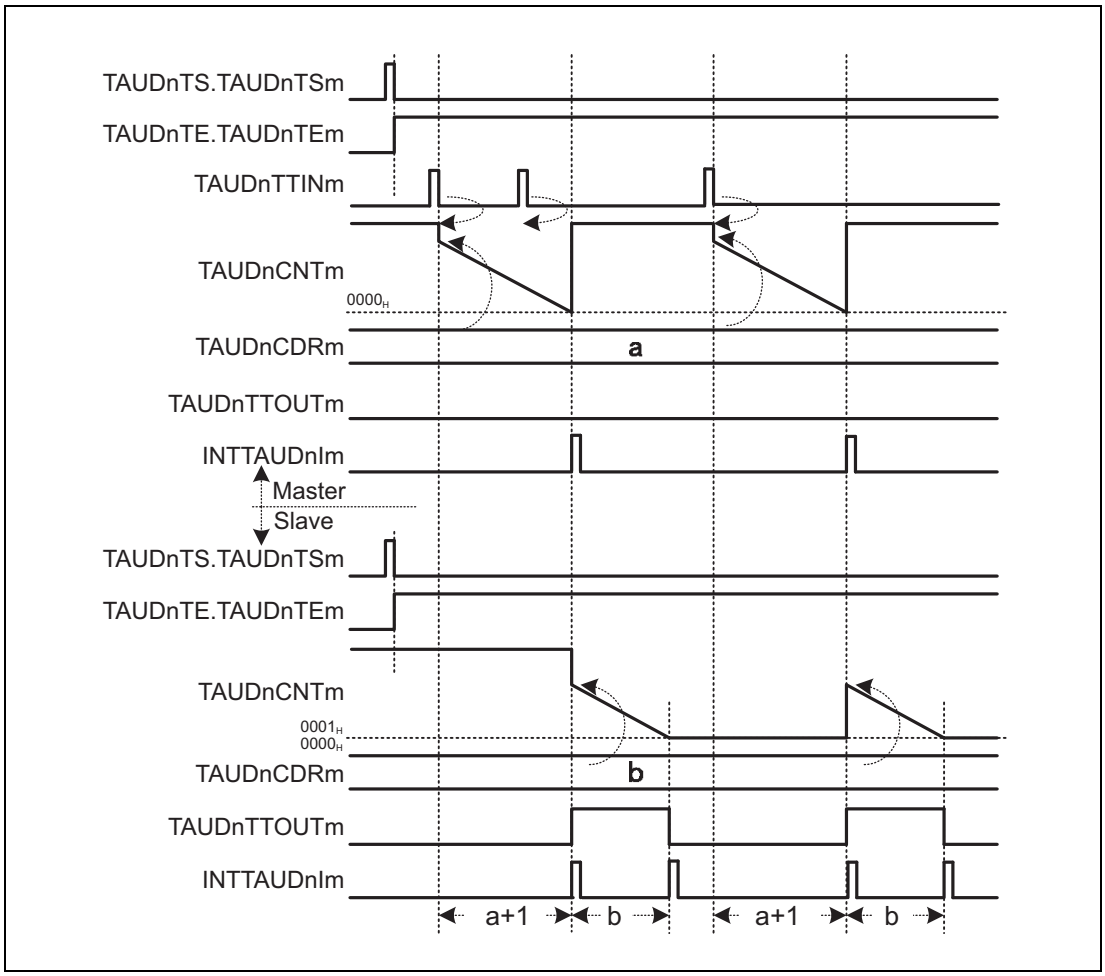

Figure 23.89 General Timing Diagram of One-Shot Pulse Output Function (External Input Signal)

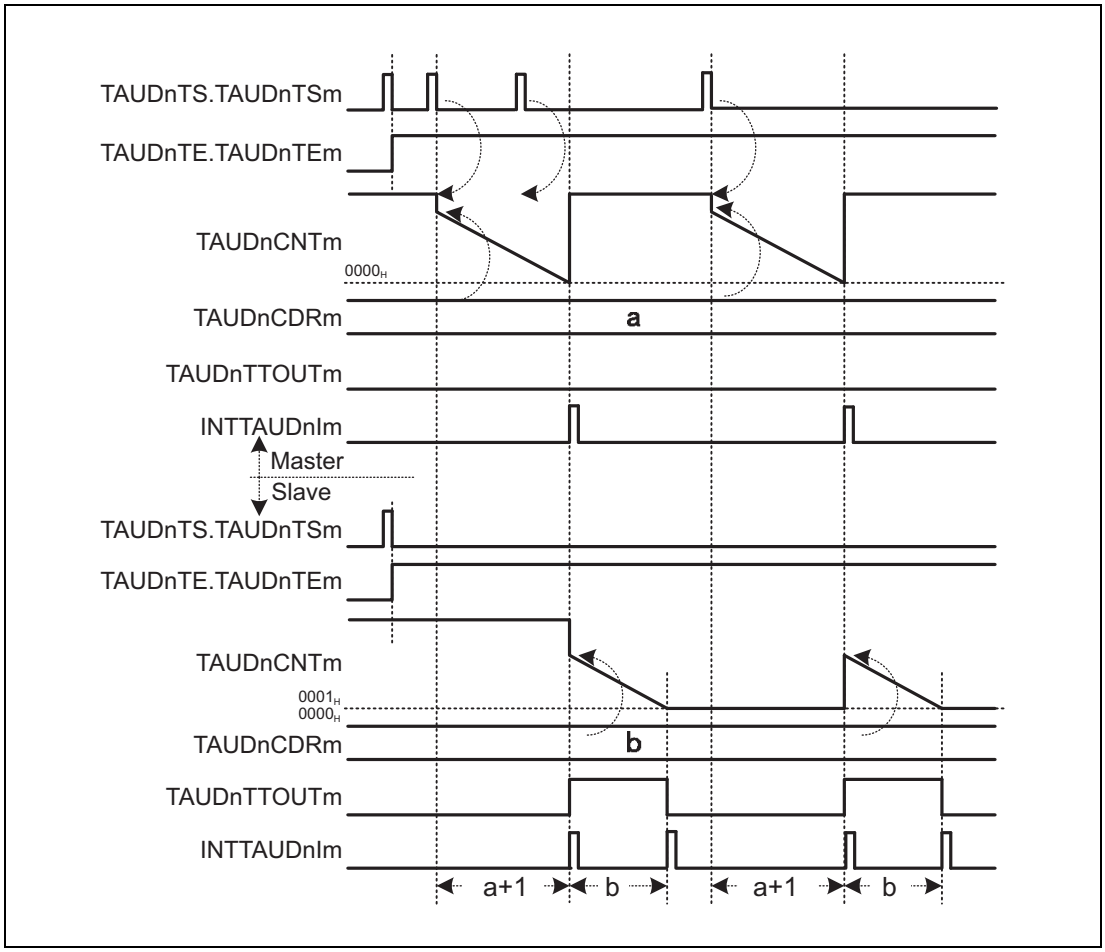

Figure 23.90 General Timing Diagram of One-Shot Pulse Output Function (Software Trigger)

23.13.2.4 Register Settings for the Master Channel

(1) TAUDnCMORm for the master channel

Bit	15	14	13	12	11	10	9	8	7	6	5	4	3	2	1	0
	TAUDnCKS[1:0]		TAUDnCCS[1:0]		TAUDn MAS	TAUDnSTS[2:0]			TAUDnCOS[1:0]		—	TAUDnMD[4:1]				TAUDn MD0
Value after reset	0	0	0	0	0	0	0	0	0	0	0	0	0	0	0	0
R/W	R/W	R/W	R/W	R/W	R/W	R/W	R/W	R/W	R/W	R/W	R	R/W	R/W	R/W	R/W	R/W

Table 23.130 Contents of the TAUDnCMORm register for the Master Channel of the One-Shot Pulse Output Function

Bit Position	Bit Name	Function
15, 14	TAUDnCKS[1:0]	Operating Clock Selection 00: Prescaler output CK0 01: Prescaler output CK1 10: Prescaler output CK2 11: Prescaler output CK3 The value of the TAUDnCKS[1:0] bit of the master and slave channels must be identical.
13, 12	TAUDnCCS[1:0]	00: Uses an operating clock as a count clock
11	TAUDnMAS	1: Channel is master channel
10 to 8	TAUDnSTS[2:0]	001: Valid TAUDnTTINm input edge signal is used as the start trigger
7, 6	TAUDnCOS[1:0]	00: Unused. Set to 00.
5	Reserved	When read, the value after reset is read. When writing, write the value after reset.
4 to 1	TAUDnMD[4:1]	0100: One-count mode
0	TAUDnMD0	0: Disables detection of start trigger during count operation. 1: Enables start trigger detection while counting. MD0 bit of master and slave channels should have the same value.

(2) TAUDnCMURm for master channels

Bit	7	6	5	4	3	2	1	0
	—	—	—	—	—	—	TAUDnTIS[1:0]	
Value after reset	0	0	0	0	0	0	0	0
R/W	R	R	R	R	R	R	R/W	R/W

Table 23.131 Contents of the TAUDnCMURm register for the Master Channel of the One-Shot Pulse Output Function

Bit Position	Bit Name	Function
7 to 2	Reserved	When read, the value after reset is read. When writing, write the value after reset.
1, 0	TAUDnTIS[1:0]	00: Detection of falling edge 01: Detection of rising edge 10: Detection of rising and falling edges 11: Setting prohibited

(3) Channel output mode for master channels

TAUDnTOE.TAUDnTOEm is set to 0 because channel output mode is not used with this function.

(4) Simultaneous rewrite for master channels

Both master and slave channels should have the same simultaneous rewrite settings.

Table 23.132 Simultaneous Rewrite Settings for Master Channels of One-Shot Pulse Output Function

Bit Name	Setting
TAUDnRDE.TAUDnRDEm	1: Enables simultaneous rewrite.
TAUDnRDS.TAUDnRDSm	0: Master channel is simultaneous rewrite control channel.
TAUDnRDM.TAUDnRDMm	0: Generates a simultaneous rewrite trigger signal when the master channel starts to count.
TAUDnRDC.TAUDnRDCm	0: Does not operate as a simultaneous rewrite trigger generation channel.

23.13.2.5 Register Settings for Slave Channels

(1) TAUDnCMORm for slave channels

Bit	15	14	13	12	11	10	9	8	7	6	5	4	3	2	1	0
	TAUDnCKS[1:0]		TAUDnCCS[1:0]		TAUDn MAS	TAUDnSTS[2:0]			TAUDnCOS[1:0]		—	TAUDnMD[4:1]				TAUDn MD0
Value after reset	0	0	0	0	0	0	0	0	0	0	0	0	0	0	0	0
R/W	R/W	R/W	R/W	R/W	R/W	R/W	R/W	R/W	R/W	R/W	R	R/W	R/W	R/W	R/W	R/W

Table 23.133 Contents of the TAUDnCMORm register for the Slave Channel of the One-Shot Pulse Output Function

Bit Position	Bit Name	Function
15, 14	TAUDnCKS[1:0]	Operating Clock Selection 00: Prescaler output CK0 01: Prescaler output CK1 10: Prescaler output CK2 11: Prescaler output CK3 The value of the TAUDnCKS[1:0] bit of the master and slave channels must be identical.
13, 12	TAUDnCCS[1:0]	00: Uses an operating clock as a count clock
11	TAUDnMAS	0: Slave channel
10 to 8	TAUDnSTS[2:0]	100: INTTAUDnIm of master channel is a start trigger.
7, 6	TAUDnCOS[1:0]	00: Unused. Set to 00.
5	Reserved	When read, the value after reset is read. When writing, write the value after reset.
4 to 1	TAUDnMD[4:1]	1010: Pulse one-count mode
0	TAUDnMD0	0: Disables detection of start trigger during count operation. 1: Enables start trigger detection while counting. MD0 bit of master and slave channels should have the same value.

(2) TAUDnCMURm for slave channels

Bit	7	6	5	4	3	2	1	0
	—	—	—	—	—	—	TAUDnTIS[1:0]	
Value after reset	0	0	0	0	0	0	0	0
R/W	R	R	R	R	R	R	R/W	R/W

Table 23.134 Contents of the TAUDnCMURm register for the Slave Channel of the One-Shot Pulse Output Function

Bit Position	Bit Name	Function
7 to 2	Reserved	When read, the value after reset is read. When writing, write the value after reset.
1, 0	TAUDnTIS[1:0]	00: Unused. Set to 00.

(3) Channel output mode for the slave channel

Table 23.135 Control Bit Settings in Independent Channel Output Mode 2

Bit Name	Setting
TAUDnTOE.TAUDnTOEm	1: Enables independent channel output mode
TAUDnTOM.TAUDnTOMm	0: Independent channel output
TAUDnTOC.TAUDnTOCm	1: Operating mode 2
TAUDnTOL.TAUDnTOLm	0: Positive logic 1: Negative logic
TAUDnTDE.TAUDnTDEm	0: Disables dead time operation
TAUDnTDM.TAUDnTDMm	0: When dead time operation is disabled (TAUDnTDE.TAUDnTDEm = 0), set these bits to 0
TAUDnTDL.TAUDnTDLm	0: When dead time operation is disabled (TAUDnTDE.TAUDnTDEm = 0), set these bits to 0
TAUDnTRE.TAUDnTREm	0: Disables real-time output
TAUDnTRO.TAUDnTROm	0: When real-time output is disabled (TAUDnTRE.TAUDnTREm = 0), set these bits to 0
TAUDnTRC.TAUDnTRCm	0: Operation as a real-time output trigger channel is prohibited.
TAUDnTME.TAUDnTMEm	0: Disables modulation

(4) Simultaneous rewrite for slave channels

Both master and slave channels should have the same simultaneous rewrite settings.

Table 23.136 Simultaneous Rewrite Settings for Slave Channels of One-Shot Pulse Output Function

Bit Name	Setting
TAUDnRDE.TAUDnRDEm	1: Enables simultaneous rewrite.
TAUDnRDS.TAUDnRDSm	0: Master channel is simultaneous rewrite control channel.
TAUDnRDM.TAUDnRDMm	0: Generates a simultaneous rewrite trigger signal when the master channel starts to count.
TAUDnRDC.TAUDnRDCm	0: Does not operate as a simultaneous rewrite trigger generation channel.

23.13.2.6 Operating Procedure for One-Shot Pulse Output Function

Table 23.137 Operating Procedure for One-Shot Pulse Output Function

	Operation	TAUDn Status
Initial Channel Setting	Master channels: Set TAUDnCMORm/ TAUDnCMURm register and the channel output mode as described in **Section 23.13.2.4, Register Settings for the Master Channel**. Slave channels: Set TAUDnCMORm/ TAUDnCMURm register and channel output mode as described in **Section 23.13.2.5, Register Settings for Slave Channels**. Set the value of TAUDnCDRm register of every channel.	Channel operation is stopped.
Start Operation	Set TAUDnTS.TAUDnTSm of master and slave channels to 1 simultaneously. TAUDnTS.TAUDnTSm is a trigger bit, which is automatically cleared to 0.	TAUDnTE.TAUDnTEm (master and slave channels) is set to 1 and the master channel awaits a TAUDnTTINm input.
During Operation	TAUDnCDRm can be changed at any time. TAUDnCNTm and TAUDnRSF.TAUDnRSFm can be read at any time. TAUDnRDT.TAUDnRDTm can be changed during operation.	When valid TAUDnTTINm input edge is detected, TAUDnCDRm value of master channel is loaded into TAUDnCNTm to start countdown. When the counter reaches 0000_H: • INTTAUDnIm (master) occurs. • TAUDnCNTm (master) returns to $FFFF_H$, and awaits for the next valid TAUDnTTINm input edge. • TAUDnCDRm value is reloaded into TAUDnCNTm (master) to start countdown. • TAUDnCDRm value is reloaded into TAUDnCNTm (slave) to start countdown. • INTTAUDnIm (slave) occurs. • TAUDnTTOUTm (slave) becomes active level. When TAUDnCNTm (slave) reaches 0001_H: • INTTAUDnIm (slave) occurs. • TAUDnTTOUTm (slave) becomes inactive and count operation of the slave channel stops.
Stop Operation	Set TAUDnTT.TAUDnTTm of master and slave channels to 1 simultaneously. TAUDnTT.TAUDnTTm is a trigger bit, which is automatically cleared to 0.	TAUDnTE.TAUDnTEm is cleared to 0 and the counter stops. TAUDnCNTm and TAUDnTTOUTm stop and retain their current values.

Restart

23.13.2.7 Specific Timing Diagrams

(1) TAUDnCDRm (master) = 0000_H

The following settings apply to this diagram:

- Disables detection of start trigger during count operation. (TAUDnCMORm.TAUDnMD0 = 0)
- Detection of falling edge (TAUDnCMURm.TAUDnTIS[1:0] = 00_B)

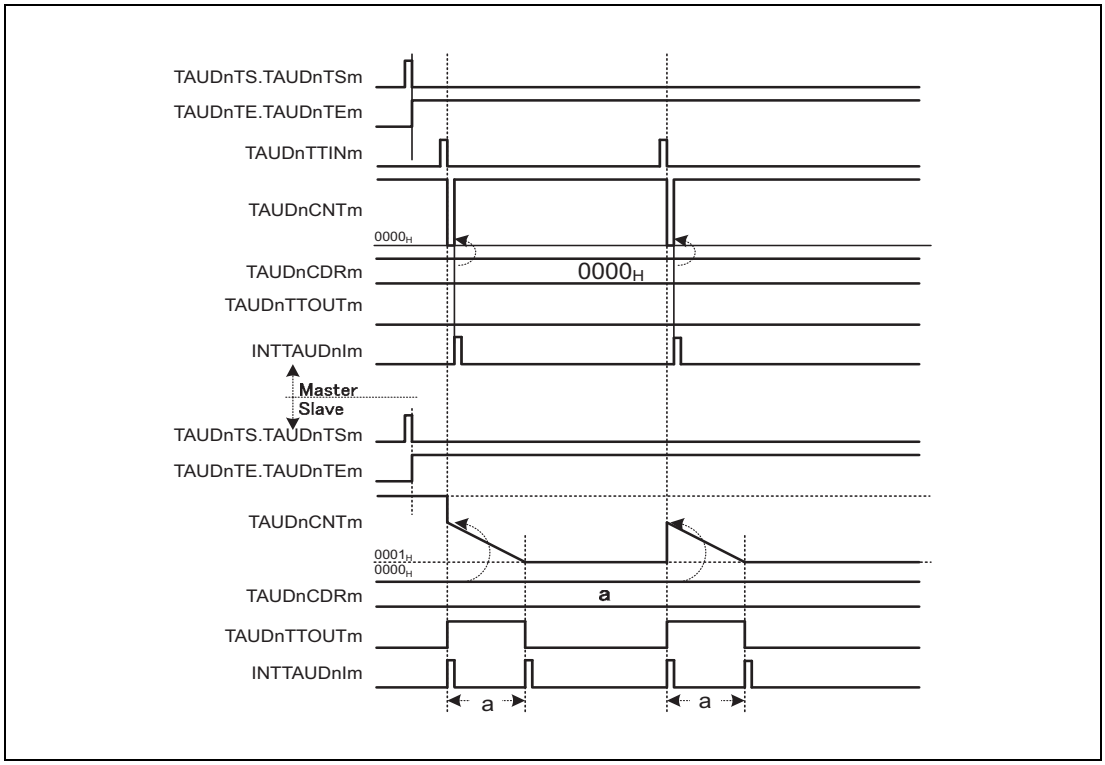

Figure 23.91 TAUDnCDRm (Master) = 0000_H

- When a valid TAUDnTTINm input edge is detected, the value 0000_H is written to TAUDnCNTm (master). The counter is set to 0000_H for one count and returns to $FFFF_H$.
  Thus the slave channel starts to count down one count clock later to TAUDnTTINm (master).

(2) TAUDnCDRm (slave) = 0000_H

The following settings apply to this diagram:

- Disables detection of start trigger during count operation. (TAUDnCMORm.TAUDnMD0 = 0)
- Detection of falling edge (TAUDnCMURm.TAUDnTIS[1:0] = 00_B)

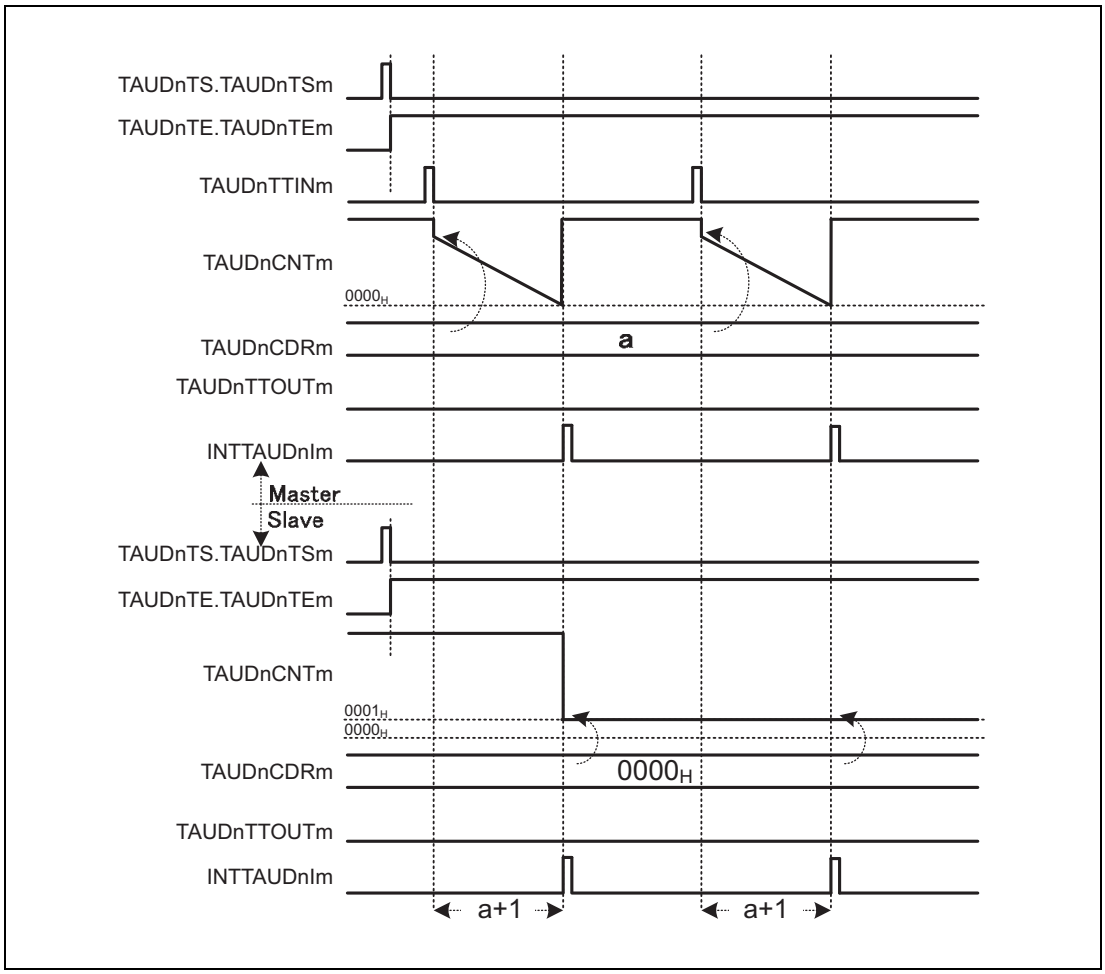

Figure 23.92 TAUDnCDRm (Slave) = 0000_H

- TAUDnTTOUTm remains at not active state, because the pulse width is zero.

(3) TAUDnCMORm.TAUDnMD0 = 1

The following settings apply to this diagram:

- Enables start trigger detection while counting. (TAUDnCMORm.TAUDnMD0 = 1)
- Detection of falling edge (TAUDnCMURm.TAUDnTIS[1:0] = 00_B)

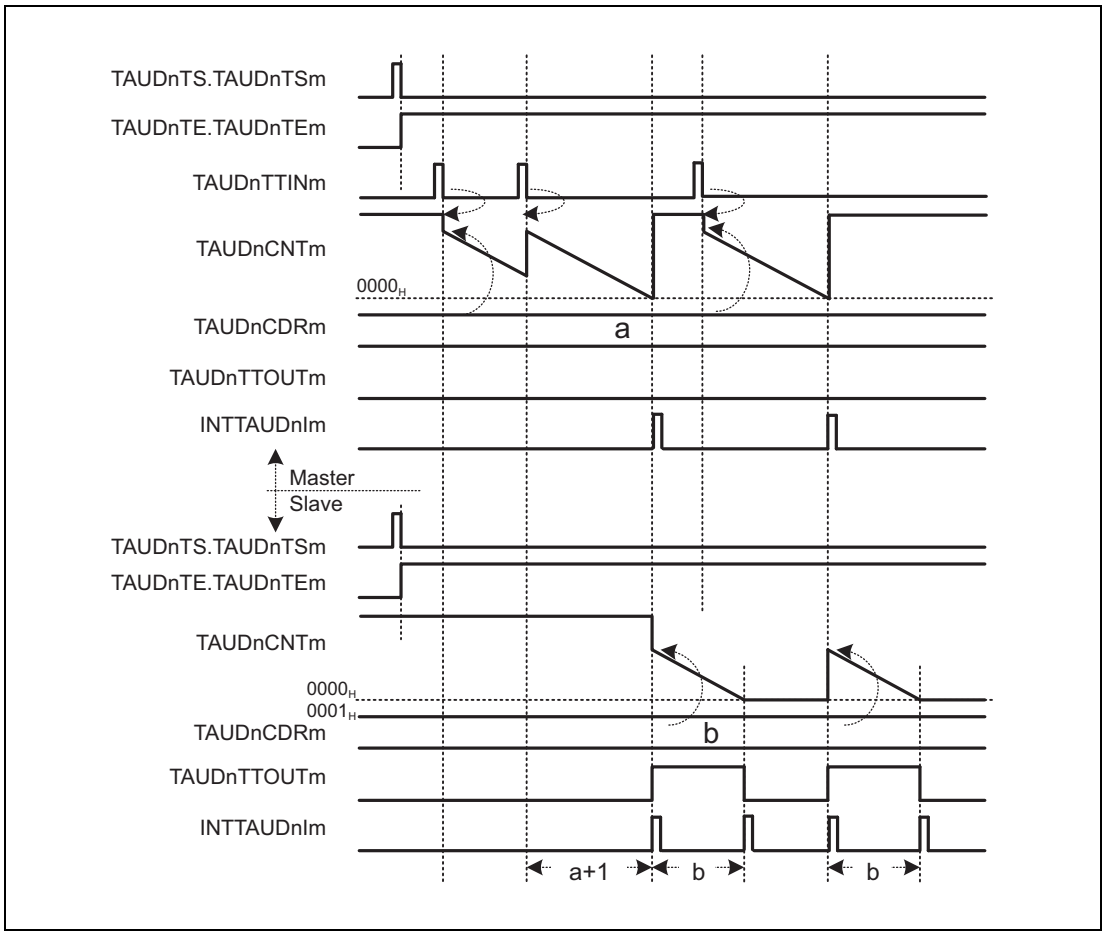

Figure 23.93 TAUDnCMORm.TAUDnMD0 = 1

- If a valid TAUDnTTINm input edge is detected while the counter of the master channel counts down, TAUDnCNTm reloads the value of TAUDnCDRm. The counter restarts to count down. This means the delay is extended by the value of TAUDnCNTm at the time a valid TAUDnTTINm input edge is detected.

(4) Restarting the master channel while the slave channel is counting

The following settings apply to this diagram:

- Disables detection of start trigger during count operation. (TAUDnCMORm.TAUDnMD0 = 0)
- Detection of falling edge (TAUDnCMURm.TAUDnTIS[1:0] = 00_B)

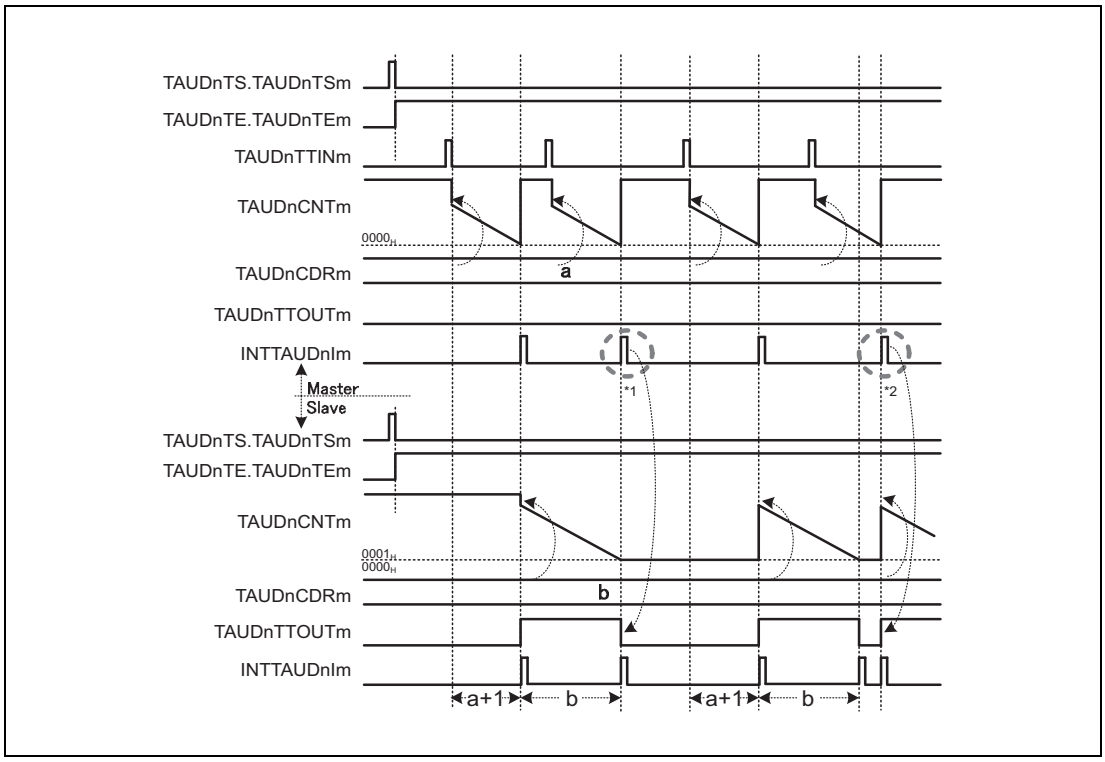

Figure 23.94 Input Interval of TAUDnTTINm ≤ Delay Time + Pulse Width + 1

- If the master channel generates an interrupt before the counter of the slave channel has reached 0001_H or exactly when 0001_H is reached[*1], the interrupt (master) is ignored.
- If an interrupt of the master channel occurs when the counter of the slave channel awaits the next trigger, the value of TAUDnCDRm (slave) is reloaded. An interrupt is generated and TAUDnTTOUTm toggles. If TAUDnCNTm (master) has started to count down while the TAUDnCNTm (slave) is still counting[*2], TAUDnTTOUTm is not output with the expected delay time.
- To generate the correct one-shot pulse, the start trigger for the master channel must be detected while the master and slave channels are waiting for the start trigger, and not while they are counting.

23.13.3 Delay Pulse Output Function

23.13.3.1 Overview

Summary

This function outputs two signals. The pulse width and pulse cycle of the reference signal are defined using the master channel and slave channel 1. Slave channels 2 and 3 output the reference signal with a specified delay. The delay signal is identical to the reference signal, but delayed by the amount specified on slave channel 2.

The signal values are specified in the following way:

- The pulse cycle is specified using the master channel.
- The duty cycle of the reference signal is specified using slave channel 1. The duty cycle of the delay signal is specified using slave channel 3.
- The delay amount is specified on slave channel 2.

Prerequisites

- Four channels
- The operating mode for the master channel should be set to interval timer mode. (See **Table 23.138, Contents of the TAUDnCMORm register for the Master Channel of the Delay Pulse Output Function**.)
- The operating mode for slave channels 1 and 2 should be set to one-count mode. (See **Table 23.141, Contents of the TAUDnCMORm register for the Slave Channel 1 of the Delay Pulse Output Function**, **Table 23.145, Contents of the TAUDnCMORm register for the Slave Channel 2 of the Delay Pulse Output Function**.)
- The operating mode for slave channel 3 should be set to pulse one-count mode. (See **Table 23.148, Contents of the TAUDnCMORm register for the Slave Channel 3 of the Delay Pulse Output Function**.)
- TAUDnTTOUTm is not used with the master channel and slave channel 2.
- The channel output mode for slave channel 1 should be set to synchronous channel output mode 1. (See **Section 23.7, Channel Output Modes**.)
- The channel output mode for slave channel 3 should be set to independent channel output mode 2. (See **Section 23.7, Channel Output Modes**.)

Functional description

The counters of the channel group are started by setting the channel trigger bit (TAUDnTS.TAUDnTSm) to 1. This sets TAUDnTE.TAUDnTEm to 1, enabling count operation.

- Master channel:
  The current value of TAUDnCDRm is loaded into TAUDnCNTm and the counter starts to count down from this value. INTTAUDnIm is generated on the master channel.
  When the counter value of master channel reaches 0000_H and pulse cycle time has elapsed, INTTAUDnIm is generated. The TAUDnCDRm value is reloaded into the counter to perform count down.

- Slave channels 1 and 2:
  Slave channels 1 and 2 start to count down from the current TAUDnCDRm value when detecting an interrupt from the master channel. TAUDnTTOUTm signal (slave 1) is set.
  - Slave channel 1:
    When the counter of slave channel 1 reaches 0000_H (duty time has elapsed), INTTAUDnIm is generated and TAUDnTTOUTm signal is reset. The counter is reset to $FFFF_H$ and waits for the next INTTAUDnIm of master channel.
  - Slave channel 2:
    When the counter of slave channel 2 reaches 0000_H and delay time has elapsed, INTTAUDnIm is generated. The counter is reset to $FFFF_H$ and waits for the next INTTAUDnIm of master channel.
    Generating INTTAUDnIm (slave channel 2) triggers the counter of slave channel 3.
- Slave channel 3:
  When slave channel 3 detects an interrupt from slave channel 2, its counter starts counting down from the current value of TAUDnCDRm. INTTAUDnIm is generated and the TAUDnTTOUTm signal (slave channel 3) is set.
  When the counter of slave channel 3 reaches 0001_H, INTTAUDnIm is generated and the TAUDnTTOUTm signal is reset.
  The delayed PWM pulse is output from slave channel 3.

The counter can be stopped by setting TAUDnTT.TAUDnTTm of master and slave channels to 1. This sets TAUDnTE.TAUDnTEm to 0. TAUDnCNTm and TAUDnTTOUTm of master and slave channels stop but their values are retained. The counter can be restarted by setting TAUDnTS.TAUDnTSm to 1.

Conditions

Simultaneous rewrite can be used with this function. See **Section 23.6, Simultaneous Rewrite**.

23.13.3.2 Equations

Pulse cycle = (TAUDnCDRm (master) + 1) × count clock cycle

Duty width 1 = (TAUDnCDRm (slave 1)) × count clock cycle

Delay width = (TAUDnCDRm (slave 2) + 1) × count clock cycle

Duty width 2 = (TAUDnCDRm (slave 3)) × count clock cycle

However, the delay width shall be set within the following range:

$0000_H \leq$ TAUDnCDRm (slave 2) < TAUDnCDRm (master)

NOTES

1. The output waveform of TAUDnTTOUTm (slave 3) becomes the waveform made by delaying the output waveform of TAUDnTTOUTm (slave 1) by the quantity generated by slave 2. It is impossible to make a delay longer than the pulse cycle.
2. If INTTAUDnIm of slave 2 is generated while slave 3 is counting, slave 3 restarts operation. Therefore, the output waveform of TAUDnTTOUTm (slave 3) is retained on the active level. In this case, TOUTn (Slave-CH-3) cannot output the waveform generated by delaying the basic pulse of TOUTn (Slave-CH-1).

23.13.3.3 Block Diagram and General Timing Diagram

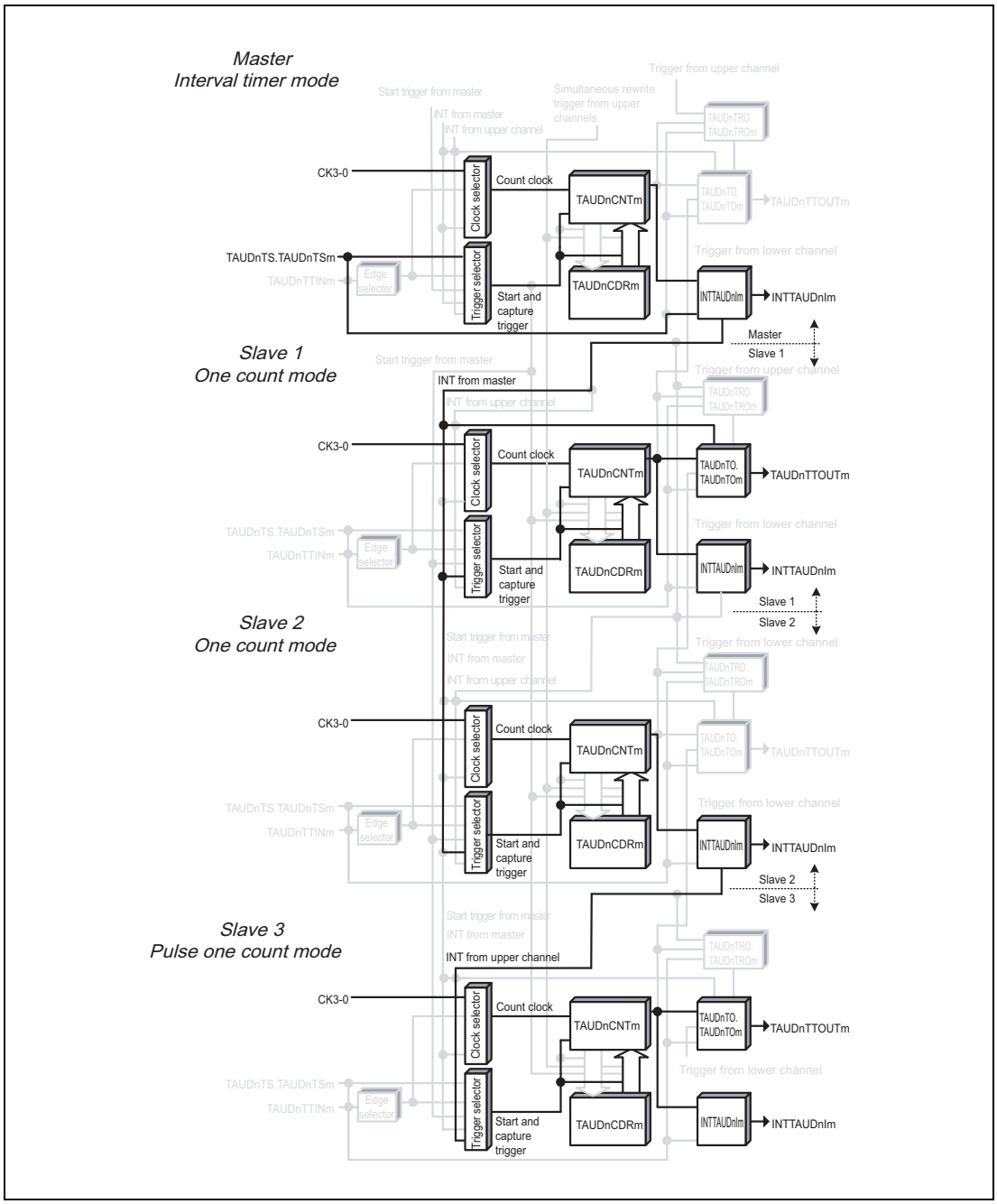

Figure 23.95 Block Diagram of Delay Pulse Output Function

The following settings apply to the general timing diagram.

- Slave channel 1: Positive logic (TAUDnTOL.TAUDnTOLm = 0)
- Slave channel 3: Positive logic (TAUDnTOL.TAUDnTOLm = 0)

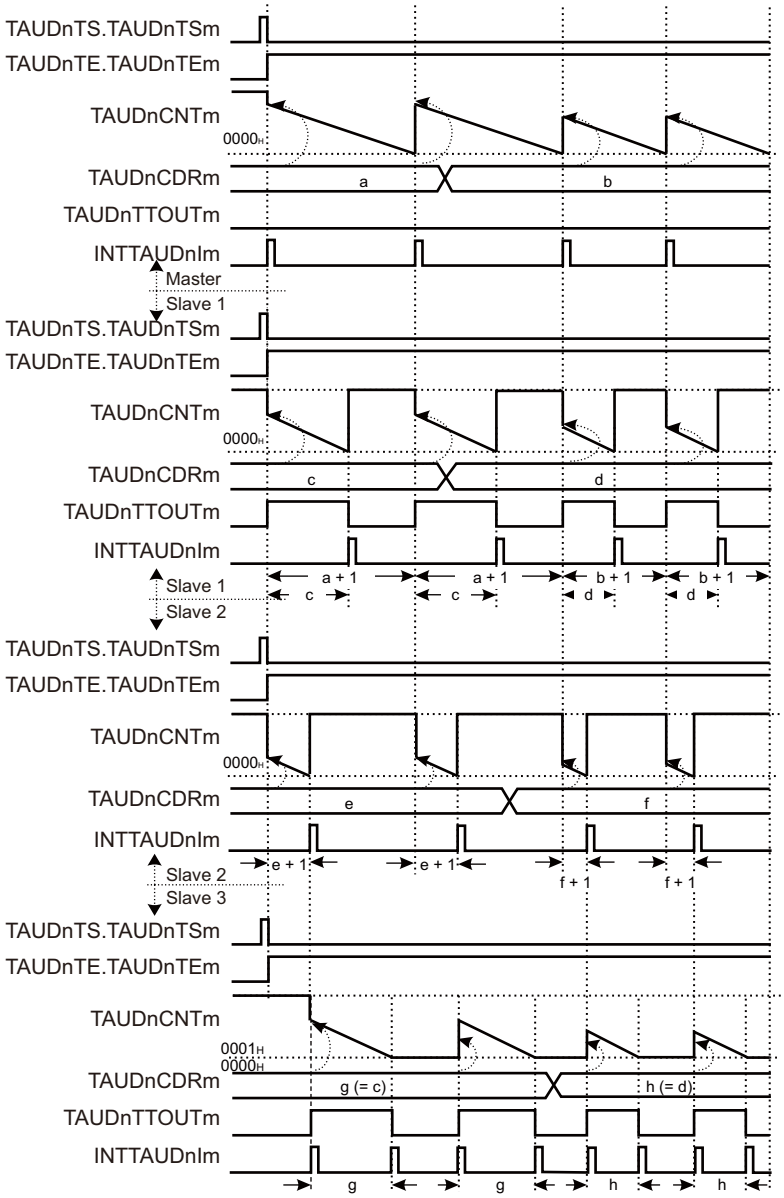

Figure 23.96 General Timing Diagram of Delay Pulse Output Function

23.13.3.4 Register Settings for the Master Channels

(1) TAUDnCMORm for the master channel

Bit	15	14	13	12	11	10	9	8	7	6	5	4	3	2	1	0
	TAUDnCKS[1:0]		TAUDnCCS[1:0]		TAUDn MAS	TAUDnSTS[2:0]			TAUDnCOS[1:0]		—	TAUDnMD[4:1]				TAUDn MD0
Value after reset	0	0	0	0	0	0	0	0	0	0	0	0	0	0	0	0
R/W	R/W	R/W	R/W	R/W	R/W	R/W	R/W	R/W	R/W	R/W	R	R/W	R/W	R/W	R/W	R/W

Table 23.138 Contents of the TAUDnCMORm register for the Master Channel of the Delay Pulse Output Function

Bit Position	Bit Name	Function
15, 14	TAUDnCKS[1:0]	Operating Clock Selection 00: Prescaler output CK0 01: Prescaler output CK1 10: Prescaler output CK2 11: Prescaler output CK3 The value of the TAUDnCKS[1:0] bit of the master and slave channels must be identical.
13, 12	TAUDnCCS[1:0]	00: Uses an operating clock as a count clock
11	TAUDnMAS	1: Channel is master channel
10 to 8	TAUDnSTS[2:0]	000: Trigger the counter using software.
7, 6	TAUDnCOS[1:0]	00: Unused. Set to 00.
5	Reserved	When read, the value after reset is read. When writing, write the value after reset.
4 to 1	TAUDnMD[4:1]	0000: Interval timer mode
0	TAUDnMD0	1: INTTAUDnIm generated at the beginning of operation.

(2) TAUDnCMURm for the master channel

Bit	7	6	5	4	3	2	1	0
	—	—	—	—	—	—	TAUDnTIS[1:0]	
Value after reset	0	0	0	0	0	0	0	0
R/W	R	R	R	R	R	R	R/W	R/W

Table 23.139 Contents of the TAUDnCMURm register for the Master Channel of the Delay Pulse Output Function

Bit Position	Bit Name	Function
7 to 2	Reserved	When read, the value after reset is read. When writing, write the value after reset.
1, 0	TAUDnTIS[1:0]	00: Unused. Set to 00.

(3) Channel output mode for the master channel

TAUDnTOE.TAUDnTOEm is set to 0 because channel output mode is not used for master channels with this function.

(4) Simultaneous rewrite for the master channel

Both master and slave channels should have the same simultaneous rewrite settings.

Table 23.140 Simultaneous Rewrite Settings for the Master Channel of Delay Pulse Output Function

Bit Name	Setting
TAUDnRDE.TAUDnRDEm	1: Enables simultaneous rewrite.
TAUDnRDS.TAUDnRDSm	0: Master channel is simultaneous rewrite control channel.
TAUDnRDM.TAUDnRDMm	0: Generates a simultaneous rewrite trigger signal when the master channel starts to count.
TAUDnRDC.TAUDnRDCm	0: Does not use the channel to generate the simultaneous rewrite trigger.

23.13.3.5 Register Settings for the Slave Channel 1

(1) TAUDnCMORm for the slave channel 1

Bit	15	14	13	12	11	10	9	8	7	6	5	4	3	2	1	0
	TAUDnCKS[1:0]		TAUDnCCS[1:0]		TAUDn MAS	TAUDnSTS[2:0]			TAUDnCOS[1:0]		—	TAUDnMD[4:1]				TAUDn MD0
Value after reset	0	0	0	0	0	0	0	0	0	0	0	0	0	0	0	0
R/W	R/W	R/W	R/W	R/W	R/W	R/W	R/W	R/W	R/W	R/W	R	R/W	R/W	R/W	R/W	R/W

Table 23.141 Contents of the TAUDnCMORm register for the Slave Channel 1 of the Delay Pulse Output Function

Bit Position	Bit Name	Function
15, 14	TAUDnCKS[1:0]	Operating Clock Selection 00: Prescaler output CK0 01: Prescaler output CK1 10: Prescaler output CK2 11: Prescaler output CK3 The value of the TAUDnCKS[1:0] bit of the master and slave channels must be identical.
13, 12	TAUDnCCS[1:0]	00: Uses an operating clock as a count clock
11	TAUDnMAS	0: Slave channel
10 to 8	TAUDnSTS[2:0]	100: INTTAUDnIm of master channel is a start trigger.
7, 6	TAUDnCOS[1:0]	00: Unused. Set to 00.
5	Reserved	When read, the value after reset is read. When writing, write the value after reset.
4 to 1	TAUDnMD[4:1]	0100: One-count mode
0	TAUDnMD0	1: Valid start trigger during operation

(2) TAUDnCMURm for the slave channel 1

Bit	7	6	5	4	3	2	1	0
	—	—	—	—	—	—	TAUDnTIS[1:0]	
Value after reset	0	0	0	0	0	0	0	0
R/W	R	R	R	R	R	R	R/W	R/W

Table 23.142 Contents of the TAUDnCMURm register for the Slave Channel 1 of the Delay Pulse Output Function

Bit Position	Bit Name	Function
7 to 2	Reserved	When read, the value after reset is read. When writing, write the value after reset.
1, 0	TAUDnTIS[1:0]	00: Unused. Set to 00.

(3) Channel output mode for the slave channel 1

Table 23.143 Control Bit Settings for the Slave Channel 1 in Synchronous Channel Output Mode 1

Bit Name	Setting
TAUDnTOE.TAUDnTOEm	1: Enables independent channel output mode
TAUDnTOM.TAUDnTOMm	1: Synchronous channel operation
TAUDnTOC.TAUDnTOCm	0: Operating mode 1
TAUDnTOL.TAUDnTOLm	0: Positive logic 1: Negative logic
TAUDnTDE.TAUDnTDEm	0: Disables dead time operation
TAUDnTDM.TAUDnTDMm	0: When dead time operation is disabled (TAUDnTDE.TAUDnTDEm = 0), set these bits to 0
TAUDnTDL.TAUDnTDLm	
TAUDnTRE.TAUDnTREm	0: Disables real-time output
TAUDnTRO.TAUDnTROm	0: When real-time output is disabled (TAUDnTRE.TAUDnTREm = 0), set these bits to 0
TAUDnTRC.TAUDnTRCm	0: Operation as a real-time output trigger channel is prohibited.
TAUDnTME.TAUDnTMEm	0: Disables modulation

(4) Simultaneous rewrite for the slave channel 1

Both master and slave channels should have the same simultaneous rewrite settings.

Table 23.144 Simultaneous Rewrite Settings for the Slave Channel 1 of Delay Pulse Output Function

Bit Name	Setting
TAUDnRDE.TAUDnRDEm	1: Enables simultaneous rewrite.
TAUDnRDS.TAUDnRDSm	0: Master channel is simultaneous rewrite control channel.
TAUDnRDM.TAUDnRDMm	0: Generates a simultaneous rewrite trigger signal when the master channel starts to count.
TAUDnRDC.TAUDnRDCm	0: Does not operate as a simultaneous rewrite trigger generation channel.

23.13.3.6 Register Settings for Slave Channel 2

(1) TAUDnCMORm for slave channel 2

Bit	15	14	13	12	11	10	9	8	7	6	5	4	3	2	1	0
	TAUDnCKS[1:0]		TAUDnCCS[1:0]		TAUDn MAS	TAUDnSTS[2:0]			TAUDnCOS[1:0]		—	TAUDnMD[4:1]				TAUDn MD0
Value after reset	0	0	0	0	0	0	0	0	0	0	0	0	0	0	0	0
R/W	R/W	R/W	R/W	R/W	R/W	R/W	R/W	R/W	R/W	R/W	R	R/W	R/W	R/W	R/W	R/W

Table 23.145 Contents of the TAUDnCMORm register for the Slave Channel 2 of the Delay Pulse Output Function

Bit Position	Bit Name	Function
15, 14	TAUDnCKS[1:0]	Operating Clock Selection 00: Prescaler output CK0 01: Prescaler output CK1 10: Prescaler output CK2 11: Prescaler output CK3 The value of the TAUDnCKS[1:0] bit of the master and slave channels must be identical.
13, 12	TAUDnCCS[1:0]	00: Uses an operating clock as a count clock
11	TAUDnMAS	0: Slave channel
10 to 8	TAUDnSTS[2:0]	100: INTTAUDnIm of master channel is a start trigger.
7, 6	TAUDnCOS[1:0]	00: Unused. Set to 00.
5	Reserved	When read, the value after reset is read. When writing, write the value after reset.
4 to 1	TAUDnMD[4:1]	0100: One-count mode
0	TAUDnMD0	1: Valid start trigger during operation

(2) TAUDnCMURm for slave channel 2

Bit	7	6	5	4	3	2	1	0
	—	—	—	—	—	—	TAUDnTIS[1:0]	
Value after reset	0	0	0	0	0	0	0	0
R/W	R	R	R	R	R	R	R/W	R/W

Table 23.146 Contents of the TAUDnCMURm register for the Slave Channel 2 of the Delay Pulse Output Function

Bit Position	Bit Name	Function
7 to 2	Reserved	When read, the value after reset is read. When writing, write the value after reset.
1, 0	TAUDnTIS[1:0]	00: Unused. Set to 00.

(3) Channel output mode for slave channel 2

TAUDnTOE.TAUDnTOEm is set to 0 because channel output mode is not used with this function.

(4) Simultaneous rewrite for slave channel 2

Both master and slave channels should have the same simultaneous rewrite settings.

Table 23.147 Simultaneous Rewrite Settings for Slave Channel 2 of Delay Pulse Output Function

Bit Name	Setting
TAUDnRDE.TAUDnRDEm	1: Enables simultaneous rewrite.
TAUDnRDS.TAUDnRDSm	0: Master channel is simultaneous rewrite control channel.
TAUDnRDM.TAUDnRDMm	0: Generates a simultaneous rewrite trigger signal when the master channel starts to count.
TAUDnRDC.TAUDnRDCm	0: Does not operate as a simultaneous rewrite trigger generation channel.

23.13.3.7 Register Settings for Slave Channel 3

(1) TAUDnCMORm for slave channel 3

Bit	15	14	13	12	11	10	9	8	7	6	5	4	3	2	1	0
	TAUDnCKS[1:0]		TAUDnCCS[1:0]		TAUDn MAS	TAUDnSTS[2:0]			TAUDnCOS[1:0]		—	TAUDnMD[4:1]				TAUDn MD0
Value after reset	0	0	0	0	0	0	0	0	0	0	0	0	0	0	0	0
R/W	R/W	R/W	R/W	R/W	R/W	R/W	R/W	R/W	R/W	R/W	R	R/W	R/W	R/W	R/W	R/W

Table 23.148 Contents of the TAUDnCMORm register for the Slave Channel 3 of the Delay Pulse Output Function

Bit Position	Bit Name	Function
15, 14	TAUDnCKS[1:0]	Operating Clock Selection 00: Prescaler output CK0 01: Prescaler output CK1 10: Prescaler output CK2 11: Prescaler output CK3 The value of the TAUDnCKS[1:0] bit of the master and slave channels must be identical.
13, 12	TAUDnCCS[1:0]	00: Uses an operating clock as a count clock
11	TAUDnMAS	0: Slave channel
10 to 8	TAUDnSTS[2:0]	101: INTTAUDnIm of upper channel (m - 1) is a start trigger regardless of master setting.
7, 6	TAUDnCOS[1:0]	00: Unused. Set to 00.
5	Reserved	When read, the value after reset is read. When writing, write the value after reset.
4 to 1	TAUDnMD[4:1]	1010: Pulse one-count mode
0	TAUDnMD0	1: Valid start trigger during operation

(2) TAUDnCMURm for slave channel 3

Bit	7	6	5	4	3	2	1	0
	—	—	—	—	—	—	TAUDnTIS[1:0]	
Value after reset	0	0	0	0	0	0	0	0
R/W	R	R	R	R	R	R	R/W	R/W

Table 23.149 Contents of the TAUDnCMURm register for the Slave Channel 3 of the Delay Pulse Output Function

Bit Position	Bit Name	Function
7 to 2	Reserved	When read, the value after reset is read. When writing, write the value after reset.
1, 0	TAUDnTIS[1:0]	00: Unused. Set to 00.

(3) Channel output mode for slave channel 3

Table 23.150 Control Bit Settings in Independent Channel Output Mode 2

Bit Name	Setting
TAUDnTOE.TAUDnTOEm	1: Enables independent channel output mode
TAUDnTOM.TAUDnTOMm	0: Independent channel output
TAUDnTOC.TAUDnTOCm	1: Operating mode 2
TAUDnTOL.TAUDnTOLm	0: Positive logic 1: Negative logic
TAUDnTDE.TAUDnTDEm	0: Disables dead time operation
TAUDnTDM.TAUDnTDMm	0: When dead time operation is disabled (TAUDnTDE.TAUDnTDEm = 0), set these bits to 0
TAUDnTDL.TAUDnTDLm	
TAUDnTRE.TAUDnTREm	0: Disables real-time output
TAUDnTRO.TAUDnTROm	0: When real-time output is disabled (TAUDnTRE.TAUDnTREm = 0), set these bits to 0
TAUDnTRC.TAUDnTRCm	0: Operation as a real-time output trigger channel is prohibited.
TAUDnTME.TAUDnTMEm	0: Disables modulation

(4) Simultaneous rewrite for slave channel 3

Both master and slave channels should have the same simultaneous rewrite settings.

Table 23.151 Simultaneous Rewrite Settings for Slave channel 3 of Delay Pulse Output Function

Bit Name	Setting
TAUDnRDE.TAUDnRDEm	1: Enables simultaneous rewrite.
TAUDnRDS.TAUDnRDSm	0: Master channel is simultaneous rewrite control channel.
TAUDnRDM.TAUDnRDMm	0: Generates a simultaneous rewrite trigger signal when the master channel starts to count.
TAUDnRDC.TAUDnRDCm	0: Does not use the channel to generate the simultaneous rewrite trigger.

23.13.3.8 Operating Procedure for Delay Pulse Output Function

Table 23.152 Operating Procedure for Delay Pulse Output Function (1/2)

	Operation	TAUDn Status
Initial Channel Setting	Master channels: Set TAUDnCMORm/ TAUDnCMURm register and the channel output mode as described in **Section 23.13.3.4, Register Settings for the Master Channels**. Slave channel 1: Set TAUDnCMORm and TAUDnCMURm registers and the channel output mode as described in **Section 23.13.3.5, Register Settings for the Slave Channel 1**. Slave channel 2: Set TAUDnCMORm and TAUDnCMURm registers and the channel output mode as described in **Section 23.13.3.6, Register Settings for Slave Channel 2**. Slave channel 3: set the TAUDnCMORm and TAUDnCMURm registers and the channel output mode as described in **Section 23.13.3.7, Register Settings for Slave Channel 3**. Set the value of TAUDnCDRm register of every channel.	Channel operation is stopped.

Table 23.152 Operating Procedure for Delay Pulse Output Function (2/2)

	Operation	TAUDn Status
Start Operation	Set TAUDnTS.TAUDnTSm of master and slave channels to 1 simultaneously. TAUDnTS.TAUDnTSm is a trigger bit, which is automatically cleared to 0.	TAUDnTE.TAUDnTEm (master and slave channels) is set to 1 and the counters of master channel and slave channels 1 and 2 start. INTTAUDnIm is generated on the master channel and TAUDnTTOUTm (slave channel 1) is set.
During Operation	TAUDnCDRm can be changed at any time. TAUDnCNTm and TAUDnRSF.TAUDnRSFm can be read at any time. TAUDnRDT.TAUDnRDTm can be changed during operation.	TAUDnCNTm of master channel and slave channels 1 and 2 load TAUDnCDRm value and count down. When the counter of master channel reaches 0000_H: • INTTAUDnIm (master) occurs. • TAUDnCDRm value is reloaded into TAUDnCNTm (master) to continue count operation. • TAUDnCDRm value is reloaded into TAUDnCNTm (slave 1/2) to start countdown. • TAUDnTTOUTm (slave 1) is set. When TAUDnCNTm (slave 1) reaches 0000_H: • INTTAUDnIm (slave 1) occurs. • TAUDnTTOUTm (slave 1) is reset. When TAUDnCNTm (slave 2) reaches 0000_H: • INTTAUDnIm (slave 2) occurs. • INTTAUDnIm (slave 3) occurs. • TAUDnTTOUTm (slave 3) is set. • TAUDnCDRm value is reloaded into TAUDnCNTm (slave 3) to start a countdown operation. When TAUDnCNTm (slave 3) reaches 0001_H: • INTTAUDnIm (slave 3) occurs. • TAUDnTTOUTm (slave 3) is reset.
Stop Operation	Set TAUDnTT.TAUDnTTm of master and slave channels to 1 simultaneously. TAUDnTT.TAUDnTTm is a trigger bit, which is automatically cleared to 0.	TAUDnTE.TAUDnTEm is cleared to 0 and the counter stops. TAUDnCNTm and TAUDnTTOUTm stop and retain their current values.

Restart

23.13.3.9 Specific Timing Diagrams

(1) Duty cycle (slave 3) = 100%

The following values apply to **Figure 23.97**:

- TAUDnCDRm(master) = $000A_H$
- TAUDnCDRm(slave 1) = $000B_H$
- TAUDnCDRm(slave 2) = 0000_H
- TAUDnCDRm(slave 3) = $000B_H$

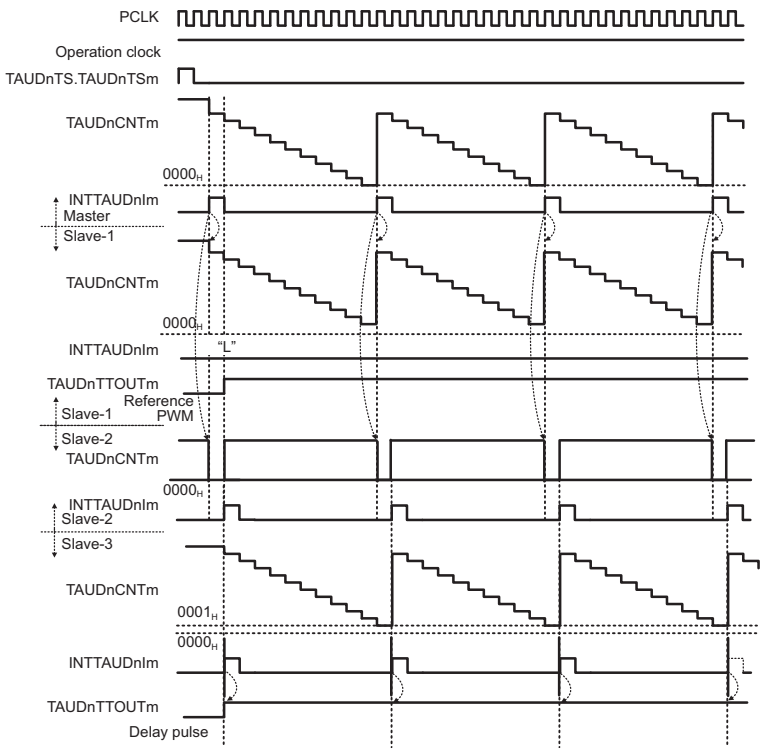

Figure 23.97 Duty Cycle (slave 3) = 100%

- If the value of TAUDnCDRm (slave 1 and 3) is higher than the value of TAUDnCDRm (master), the counter of slave channel 1 cannot reach 0000_H and cannot generate interrupts. TAUDnTTOUTm of channels 1 and 3 remain in the active state.

(2) TAUDnTTOUTm (slave 1)= TAUDnTTOUTm (slave 3)

The following values apply to **Figure 23.98**.

- TAUDnCDRm(master) = $000A_H$
- TAUDnCDRm(slave 1) = 0005_H
- TAUDnCDRm(slave 2) = 0000_H
- TAUDnCDRm(slave 3) = 0005_H

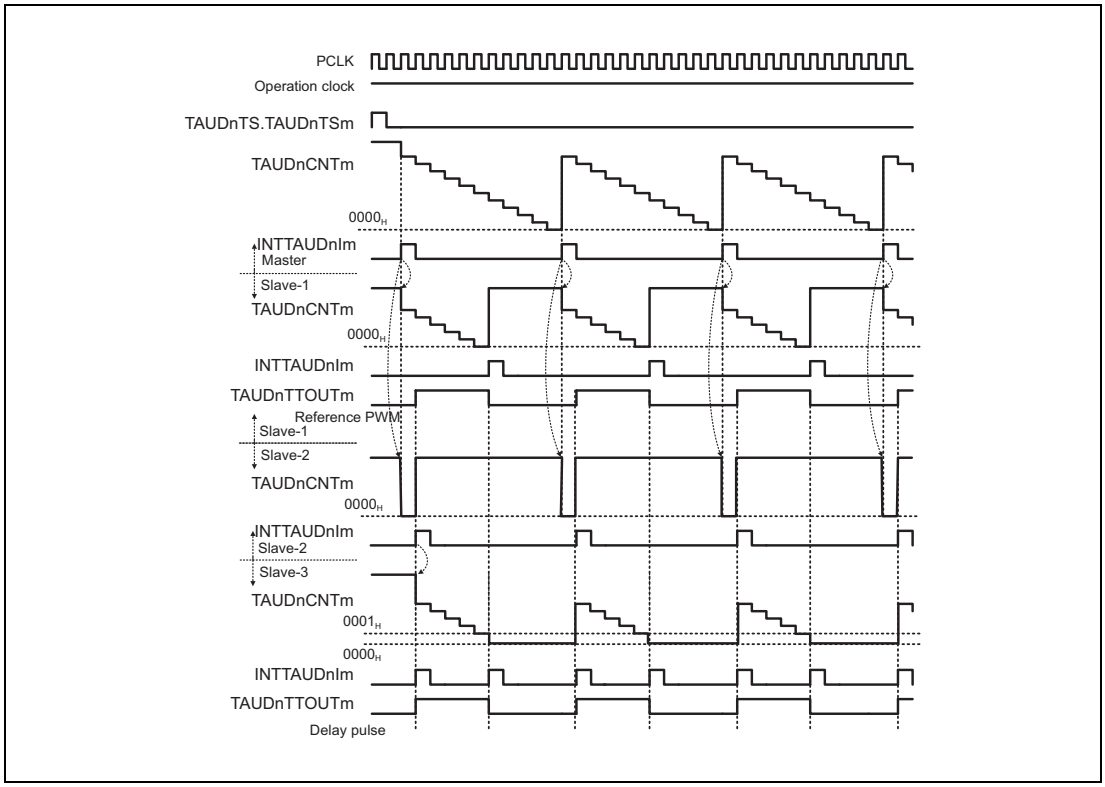

Figure 23.98 TAUDnTTOUTm (Slave 1)= TAUDnTTOUTm (Slave 3)

- If TAUDnCDRm (slave 2) = 0000_H, the counter of slave channel 3 starts counting one count clock later than the counter of slave channel 1. The reference pulse and the delay pulse are output with a delay of one clock count.

23.13.4 Offset Trigger Output Function

23.13.4.1 Overview

Summary

This function generates triangle PWM outputs by using a master channel and slave channel. This sets the pulse cycle (frequency) of TAUDnTTOUTm.

The pulse cycle is set by detecting an effective input edge of the master channel. The pulse width is specified by the slave channel.

Prerequisites

- Two channels
- The operating mode for master channels should be set to capture mode. (See **Table 23.161, Contents of the TAUDnCMORm register for the Master Channel of the Triangle PWM Output Function**.)
- The operating mode for slave channels should be set one-count mode. (See **Table 23.165, Contents of the TAUDnCMORm register for the slave channel of the triangle PWM output function**.)
- The output mode for slave channels should be set to synchronous channel output mode 1. (See **Section 23.7, Channel Output Modes**.)
- TAUDTTOUTm is not used for master channels when this function is used.

Functional description

The counters are started by setting the channel trigger bit (TAUDnTS.TAUDnTSm) to 1. This in turn sets TAUDnTE.TAUDnTEm, enabling count operation.The counter of the master channel (TAUDnCNTm) starts to count up from 0000_H.

- Master channel:
  When an effective TAUDTTINm input edge is detected, the current value of the counter (TAUDnCNTm) is loaded to the data register (TAUDnCDRm) of the master channel. INTTAUDnIm is generated and the counter restarts to count up from 0000_H.
- Slave channels:
  When INTTAUDnIm is generated on the master channel, the TAUDTTOUTm signal is set, triggering the count operation of the slave channel. The current value of the TAUDnCDRm (slave) is loaded to TAUDnCNTm (slave) and the counter starts to count down from the TAUDnCDRm value.
  When the counter reaches 0000_H (duty time is elapsed), INTTAUDnIm is generated and the INTTAUDnIm signal is reset. The counter is returned to $FFFF_H$ and waits for the next INTTAUDnIm of the master channel.

Setting TAUDnTT.TAUDnTTm of the master/slave channel to 1 stops the counter operation. This sets TAUDnTE.TAUDnTEm to 0. TAUDnCNTm and TAUDTTOUTm of the master/slave channel stop, but retain their respective values. Setting TAUDnTS.TAUDnTSm to 1 restarts the count operation.

23.13.4.2 Equations

Pulse width = (TAUDnCDRm (slave)) × count clock cycle

Duty cycle [%] = [TAUDnCDRm (slave) / (TAUDnCDRm (master) + 1)] × 100

– Duty cycle = 0%
  TAUDnCDRm (slave) = 0000_H

– Duty cycle = 100%
  TAUDnCDRm (slave) ≥ TAUDnCDRm (master) + 1

23.13.4.3 Block Diagram and General Timing Diagram

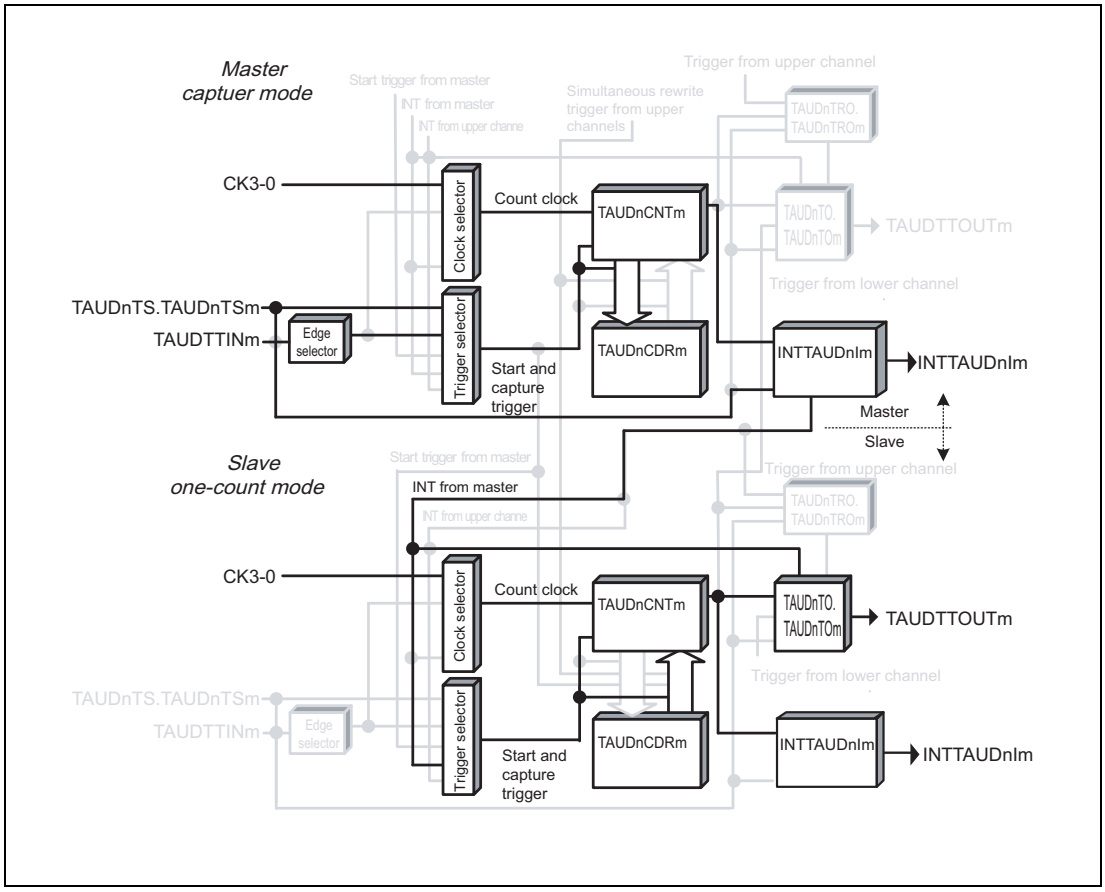

Figure 23.99 Block Diagram of Offset Trigger Output Function

The following settings apply to the general timing diagram.

- When a falling edge is detected (TAUDnCMURm.TAUDnTIS[1:0] = 00_B)

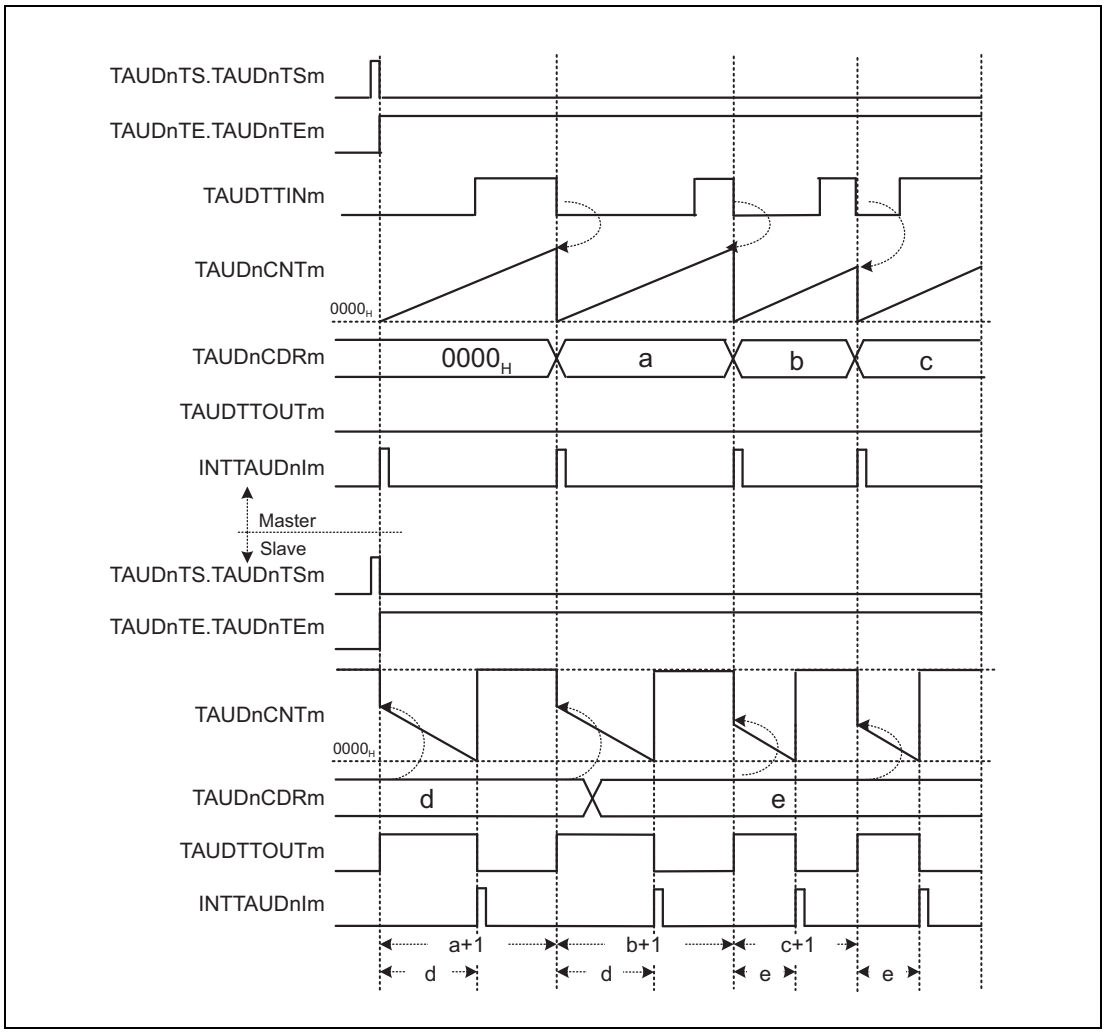

Figure 23.100 General Timing Diagram of Offset Trigger Output Function

NOTE

The TAUDTTOUTm signal from slave channel rises 1 cycle of the counter clock after the rising edge of INTTAUDnIm from the master channel.

23.13.4.4 Register Settings for Master Channels

(1) TAUDnCMORm for master channels

Bit	15	14	13	12	11	10	9	8	7	6	5	4	3	2	1	0
	TAUDnCKS [1:0]		TAUDnCCS [1:0]		TAUDn MAS	TAUDnSTS[2:0]			TAUDnCOS [1:0]		—	TAUDnMD[4:1]				TAUDn MD0
Value after reset	0	0	0	0	0	0	0	0	0	0	0	0	0	0	0	0
R/W	R/W	R/W	R/W	R/W	R/W	R/W	R/W	R/W	R/W	R/W	R	R/W	R/W	R/W	R/W	R/W

Table 23.153 Contents of the TAUDnCMORm register for the Master Channel of the Offset Trigger Output Function

Bit Position	Bit Name	Function
15, 14	TAUDnCKS [1:0]	Operating Clock Selection 00: Prescaler output CK0 01: Prescaler output CK1 10: Prescaler output CK2 11: Prescaler output CK3 The value of the TAUDnCKS[1:0] bit of the master and slave channels must be identical.
13, 12	TAUDnCCS[1:0]	00: Uses an operating clock as a count clock
11	TAUDnMAS	1: Channel is master channel
10 to 8	TAUDnSTS[2:0]	001: Uses an effective TAUDTTINm input edge signal as a start trigger
7, 6	TAUDnCOS[1:0]	11: Updates on detection of an effective TAUDTTINm input edge and occurrence of a counter overflow: – Detection of an effective TAUDTTINm input edge: A counter value is written to TAUDnCDRm. – Occurrence of an overflow; FFFF is written to TAUDnCDRm. The next effective TAUDTTINm input edge to be detected TAUDnCSRm.TAUDnOVF is set when a counter overflow occurs and cleared by the CPU instruction (TAUDnCSCm.TAUDnCLOV is set to 1).
5	Reserved	When read, the value after reset is read. When writing, write the value after reset.
4 to 1	TAUDnMD[4:1]	0010: Capture mode
0	TAUDnMD0	1: INTTAUDnIm is generated at the beginning of operation.

(2) TAUDnCMURm for master channels

Bit	7	6	5	4	3	2	1	0
	—	—	—	—	—	—	TAUDnTIS[1:0]	
Value after reset	0	0	0	0	0	0	0	0
R/W	R	R	R	R	R	R	R/W	R/W

Table 23.154 Contents of the TAUDnCMURm register for the Master Channel of the Offset Trigger Output Function

Bit Position	Bit Name	Function
7 to 2	Reserved	When read, the value after reset is read. When writing, write the value after reset.
1, 0	TAUDnTIS[1:0]	00: A falling edge is detected. 01: A rising edge is detected. 10: Falling and riding edges are detected. 11: Setting prohibited

(3) Channel output mode for master channels

TAUDnTOE.TAUDnTOEm is set to 0 since channel output mode is not used in this function.

(4) Simultaneous rewrite for master channels

The simultaneous rewrite registers (TAUDnRDE, TAUDnRDS, TAUDnRDM, and TAUDnRDC) cannot be used with the offset trigger output function. Therefore, these registers must be set to 0.

Table 23.155 Simultaneous Rewrite Settings for Master Channels of Offset Trigger Output Function

Bit Name	Setting
TAUDnRDE.TAUDnRDEm	1: Disables simultaneous rewrite.
TAUDnRDS.TAUDnRDSm	When simultaneous rewrite is disabled, set this bit to 0 (TAUDnRDE.TAUDnRDEm = 0).
TAUDnRDM.TAUDnRDMm	
TAUDnRDC.TAUDnRDCm	

23.13.4.5 Register Settings for Slave Channels

(1) TAUDnCMORm for slave channels

Bit	15	14	13	12	11	10	9	8	7	6	5	4	3	2	1	0
	TAUDnCKS [1:0]		TAUDnCCS [1:0]		TAUDn MAS	TAUDnSTS[2:0]			TAUDnCOS [1:0]		—	TAUDnMD[4:1]				TAUDn MD0
Value after reset	0	0	0	0	0	0	0	0	0	0	0	0	0	0	0	0
R/W	R/W	R/W	R/W	R/W	R/W	R/W	R/W	R/W	R/W	R/W	R	R/W	R/W	R/W	R/W	R/W

Table 23.156 Contents of TAUDnCMORm Register for Slave Channel of Offset Trigger Output Function

Bit Position	Bit Name	Function
15, 14	TAUDnCKS[1:0]	Operating Clock Selection 00: Prescaler output CK0 01: Prescaler output CK1 10: Prescaler output CK2 11: Prescaler output CK3 The value of the TAUDnCKS[1:0] bits of the master and slave channels must be identical.
13, 12	TAUDnCCS[1:0]	00: Uses an operating clock as a count clock
11	TAUDnMAS	0: Slave channel
10 to 8	TAUDnSTS[2:0]	100: Up/down output trigger signal of master channel
7, 6	TAUDnCOS[1:0]	00: Unused. Set to 00.
5	Reserved	When read, the value after reset is read. When writing, write the value after reset.
4 to 1	TAUDnMD[4:1]	1001: One-count mode
0	TAUDnMD0	1: Enables start trigger detection while counting.

(2) TAUDnCMURm for slave channels

Bit	7	6	5	4	3	2	1	0
	—	—	—	—	—	—	TAUDnTIS[1:0]	
Value after reset	0	0	0	0	0	0	0	0
R/W	R	R	R	R	R	R	R/W	R/W

Table 23.157 Contents of the TAUDnCMURm Register for Slave Channel of Offset Trigger Output Function

Bit Position	Bit Name	Function
7 to 2	Reserved	When read, the value after reset is read. When writing, write the value after reset.
1, 0	TAUDnTIS[1:0]	00: Unused. Set to 00.

(3) Channel output mode for slave channels

Table 23.158 Control Bit Settings in Synchronous Channel Output Mode 1

Bit Name	Setting
TAUDnTOE.TAUDnTOEm	1: Enables independent channel output mode
TAUDnTOM.TAUDnTOMm	1: Synchronous channel operation
TAUDnTOC.TAUDnTOCm	1: Operating mode 1
TAUDnTOL.TAUDnTOLm	0: Positive logic 1: Negative logic
TAUDnTDE.TAUDnTDEm	0: Disables dead time operation
TAUDnTDM.TAUDnTDMm	0: When dead time operation is disabled (TAUDnTDE.TAUDnTDEm = 0), set this bit to 0
TAUDnTDL.TAUDnTDLm	
TAUDnTRE.TAUDnTREm	0: Disables real-time output
TAUDnTRO.TAUDnTROm	0: When real-time output is disabled (TAUDnTRE.TAUDnTREm = 0), set this bit to 0
TAUDnTRC.TAUDnTRCm	0: Operation as a real-time output trigger channel is prohibited.
TAUDnTME.TAUDnTMEm	0: Disables modulation

(4) Simultaneous rewrite for slave channels

Simultaneous write registers (TAUDnRDE, TAUDnRDS, TAUDnRDM, and TAUDnRDC) cannot be used with the offset trigger output function. Therefore, these registers must be set to 0.

Table 23.159 Simultaneous Rewrite Settings for Slave Channels of Offset Trigger Output Function

Bit Name	Setting
TAUDnRDE.TAUDnRDEm	0: Disables simultaneous rewrite.
TAUDnRDS.TAUDnRDSm	When simultaneous rewrite is disabled, set this bit to 0 (TAUDnRDE.TAUDnRDEm = 0).
TAUDnRDM.TAUDnRDMm	
TAUDnRDC.TAUDnRDCm	

23.13.4.6 Operating Procedure for Offset Trigger Output Function

Table 23.160 Operating Procedure for Offset Trigger Output Function

	Operation	TAUDn Status
Initial Channel Setting	Master channels: Set TAUDnCMORm/ TAUDnCMURm register and the channel output mode as described in **Section 23.13.4.4, Register Settings for Master Channels**. Slave channels: Set TAUDnCMORm/ TAUDnCMURm register and the channel output mode as described in **Section 23.13.4.5, Register Settings for Slave Channels**. The TAUDnCDRm register of master channel operates as a capture register. Set the value of the TAUDnCDRm register of slave channel.	Channel operation is stopped.
Start Operation	Set TAUDnTS.TAUDnTSm of master and slave channels to 1 simultaneously. TAUDnTS.TAUDnTSm is a trigger bit, which is automatically cleared to 0.	TAUDnTE.TAUDnTEm (master and slave channels) is set to 1 and the counters of master and slave channels start. • TAUDnCNTm (master) starts to count up. • The TAUDnCDRm value is loaded to TAUDnCNTm (slave) to perform counting down. INTTAUDnIm is generated on the master channel and TAUDnTTOUTm (slave) is set.
During Operation	TAUDnCDRm can be changed at any time. TAUDnCSCm.TAUDnCLOV can be set to 1. TAUDnCDRm of slave channel can be changed after INTTAUDnIm is generated. TAUDnCNT.TAUDnCNTm and TAUDnCSRm are readable at any time.	When the counter of master channel reaches 0000_H: • INTTAUDnIm (slave) occurs. • TAUDnTTOUTm (slave) is reset and count operation stops on the slave channel. When a TAUDTTINm input edge is detected on the master channel: • INTTAUDnIm (master) is generated. • TAUDnCNTm (master) is reset to 0000_H and continues to count. • TAUDnCDRm value is reloaded into TAUDnCNTm (slave) to perform counting down. • TAUDTTOUTm (slave) is set.
Stop Operation	Set TAUDnTT.TAUDnTTm of master and slave channels to 1 simultaneously. TAUDnTT.TAUDnTTm is a trigger bit, which is automatically cleared to 0.	TAUDnTE.TAUDnTEm is cleared to 0 and the counter stops. TAUDnCNTm and TAUDnTTOUTm stop and retain their current values.

Restart

23.13.4.7 Specific Timing Diagrams

(1) Duty cycle = 0%

The following settings apply to the specific timing diagram.

- When a falling edge is detected (TAUDnCMURm.TAUDnTIS[1:0] = 00_B)

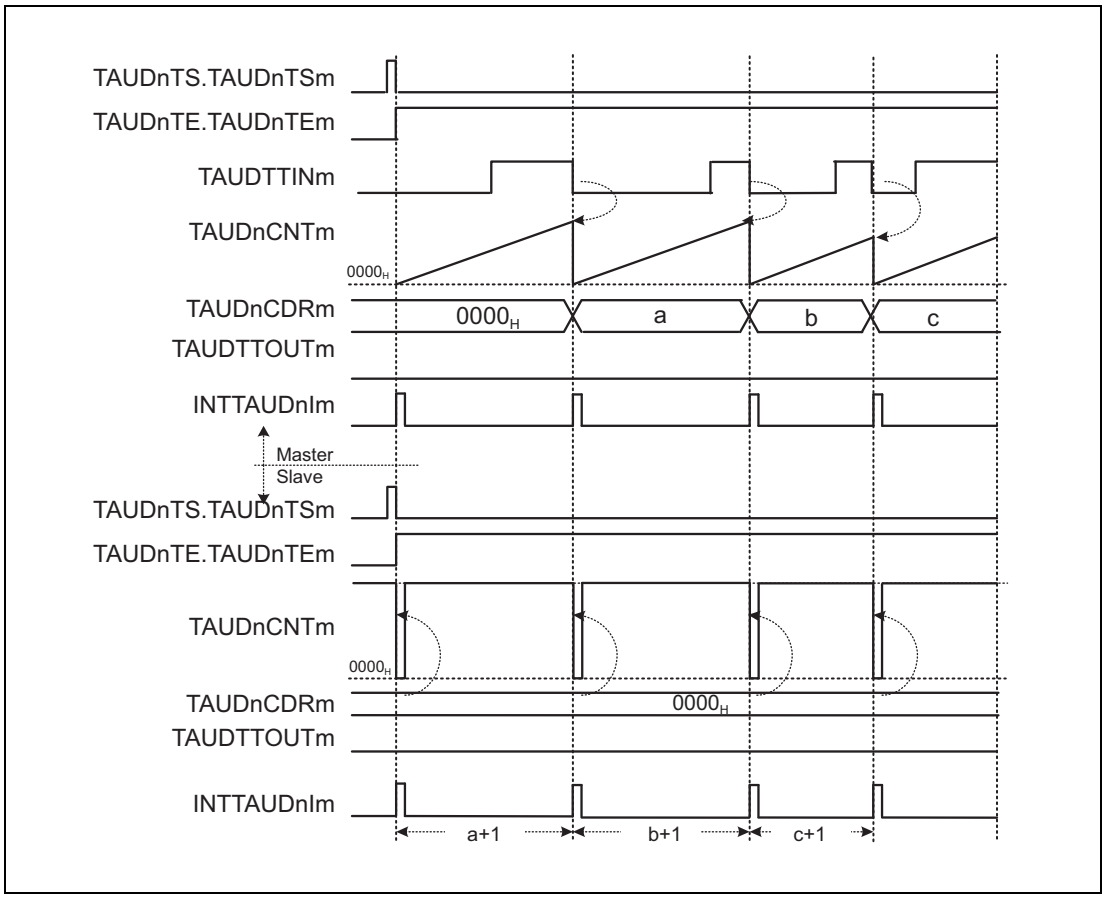

Figure 23.101 TAUDnCDRm (Slave) = 0000_H

- When TAUDnCDRm (slave) is 0000_H, 0000_H is written to TAUDnCNTm every time master channel generates an interrupt (INTTAUDnIm). Thus TAUDnCNTm cannot start to count operation. TAUDTTOUTm remains inactive.
- TAUDnCNTm (slave) generates an interrupt every time the TAUDnCDRm value is reloaded. Slave and master channels generate interrupts in the same cycle.

(2) Duty cycle = 100%

The following settings apply to the specific timing diagram.

- When a falling edge is detected (TAUDnCMURm.TAUDnTIS[1:0] = 00_B)

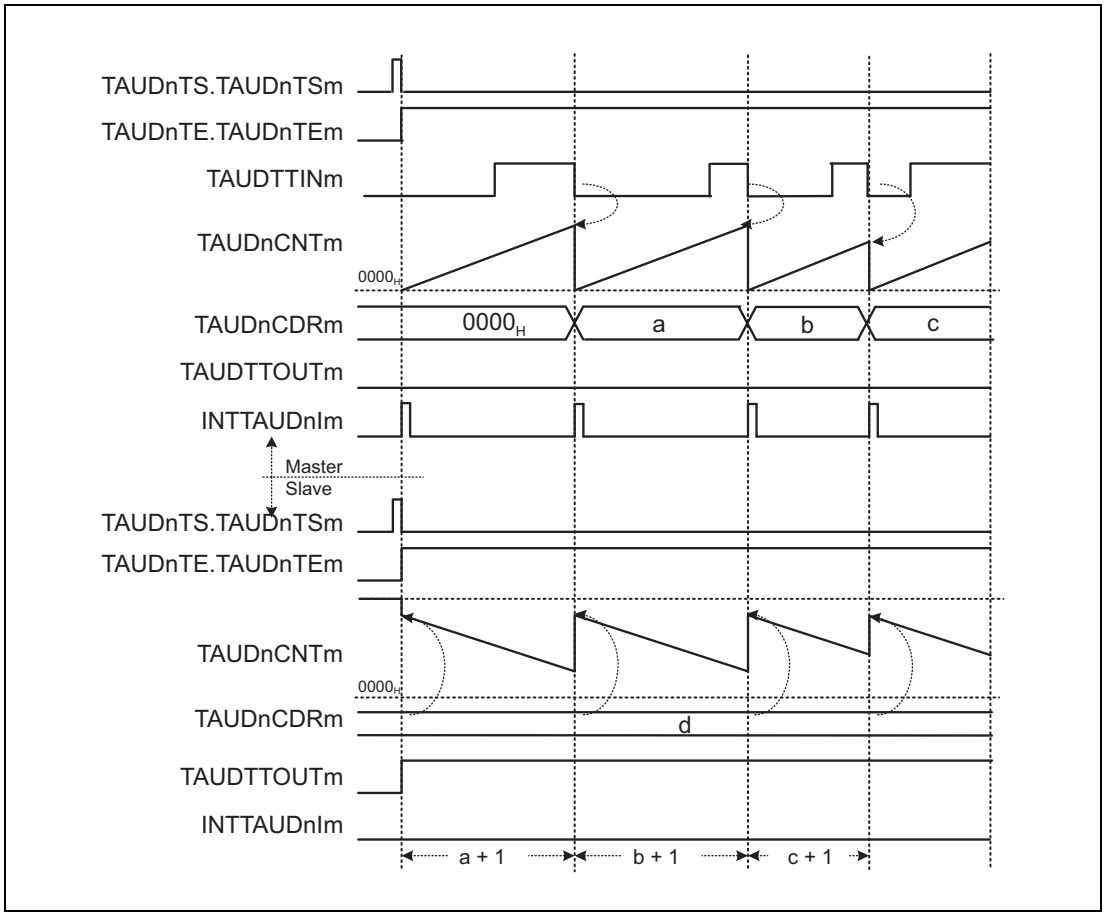

Figure 23.102 TAUDnCDRm (Slave) ≥ TAUDnCDRm (Master) + 1

- When TAUDnCDRm (slave) value exceeds the interval of an effective input edge, the counter of slave channel does not reach 0000H, and an interrupt is not generated.
  TAUDTTOUTm remains active.

23.13.5 A/D Conversion Trigger Output Function Type 1

23.13.5.1 Overview

Summary

This function is identical to **Section 23.13.1, PWM Output Function**, except that TAUDnTTOUTm is not output.

This is achieved by setting the channel output mode for the slave to independent channel output mode controlled by software.

23.13.5.2 Block Diagram and General Timing Diagram

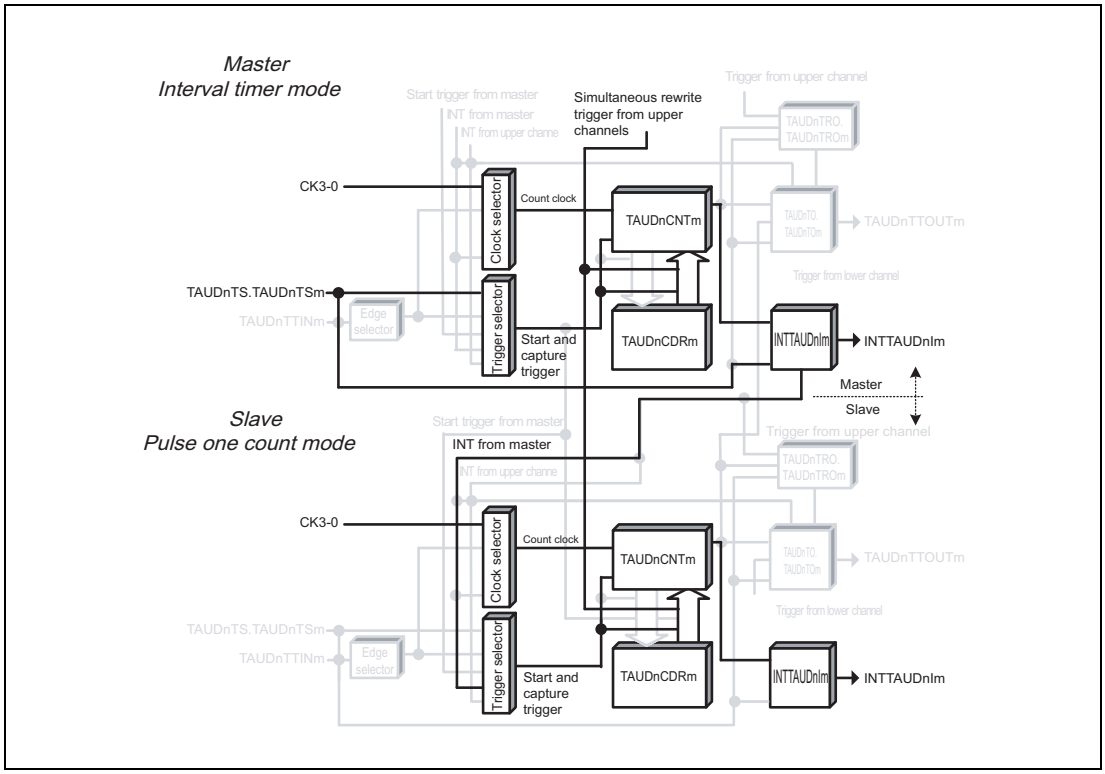

Figure 23.103 Block Diagram of A/D Conversion Trigger Output Function Type 1

23.13.5.3 General Timing Diagram

The following settings apply to the general timing diagram.

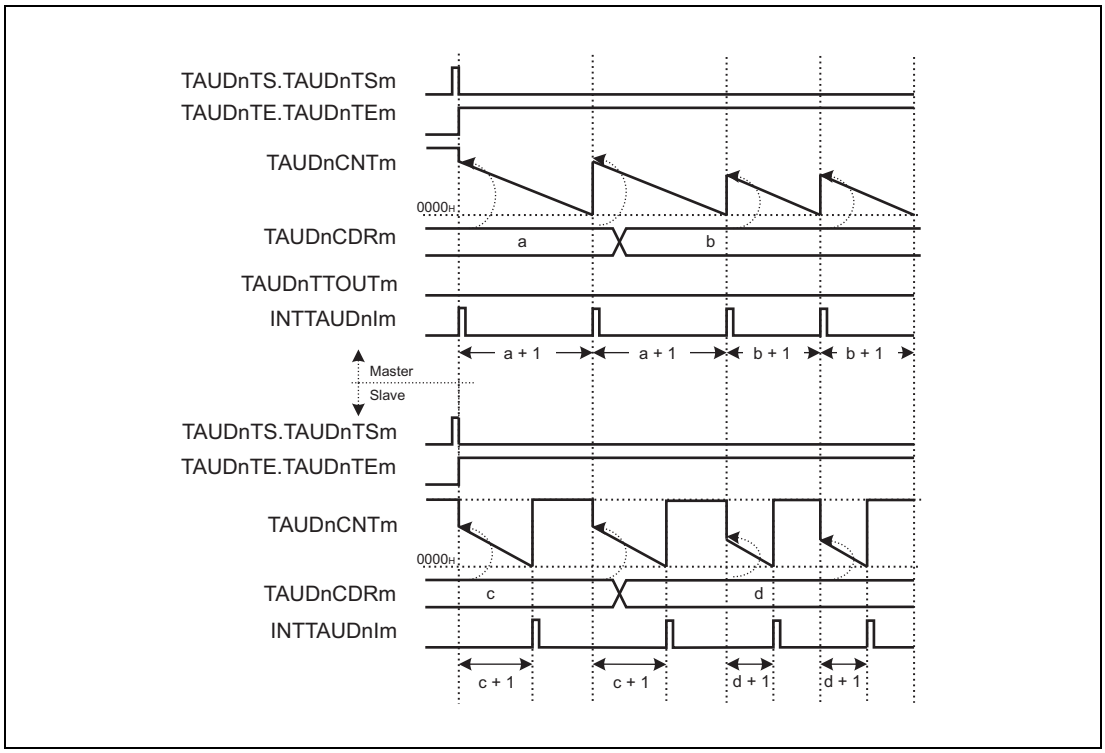

Figure 23.104 General Timing Diagram of A/D Conversion Trigger Output Function Type 1

23.13.6 Triangle PWM Output Function

23.13.6.1 Overview

Summary

This function generates multiple triangle PWM outputs by using a master and one or more slave channels. It enables the pulse cycle (frequency) and the duty cycle of TAUDnTTOUTm to be set using the master and slave channels respectively.

The master channel generates a carrier cycle. The first cycle of master channel controls the down status and the second cycle controls the up status of the slave counter.

Prerequisites

- Two channels
- The operating mode for master channels should be set to interval timer mode. (See **Table 23.161, Contents of the TAUDnCMORm register for the Master Channel of the Triangle PWM Output Function**.)
- The operating mode for slave channels should be set up/down count mode. (See **Table 23.165, Contents of the TAUDnCMORm register for the slave channel of the triangle PWM output function**.)
- The channel output mode for master channels should be set to independent channel output mode 1. (See **Section 23.7, Channel Output Modes**.)
- The channel output mode for slave channels should be set to synchronous channel output mode 2. (See **Section 23.7, Channel Output Modes**.)
- The following settings allows TAUDnTTOUTm signal to be at high level during the down status of a carrier cycle.
  - If TAUDnCMORm.TAUDnMD0 (master) bit is set to 0, TAUDnTO.TAUDnTOm should be set to 1 while TAUDnTOE.TAUDnTOEm is set to 0 (recommended setting).
  - If TAUDnCMORm.TAUDnMD0 (master) bit is set to 1, TAUDnTO.TAUDnTOm should be set to 0 while TAUDnTOE.TAUDnTOEm is set to 0.

Functional description

The counters are started by setting the channel trigger bit (TAUDnTS.TAUDnTSm) to 1 for every channel. This in turn sets TAUDnTE.TAUDnTEm, enabling count operation.

The current values of TAUDnCDRm (master and slave) are loaded into TAUDnCNTm (master and slave) and the counters start counting down from these values. When the TAUDnCMORm.TAUDnMD0 bit of master channel is set to 1, an interrupt is generated and TAUDnTTOUTm signal of master toggles.

- Master channel:
  When the counter of master channel reaches 0000_H (pulse cycle time has elapsed), INTTAUDnIm is generated and the TAUDnTTOUTm signal toggles. TAUDnCNTm then reloads the TAUDnCDRm value and counts down.

- Slave channels:
  The INTTAUDnIm of master channel triggers the counter of the slave channel:
  - If the slave counter is counting down, the count direction changes.
  - If the slave counter is counting up, TAUDnCDRm value is reloaded and the counter starts to count down.

When the counter of the slave channel reaches 0001_H while counting up or down, INTTAUDnIm is generated and the TAUDnTTOUTm (slave) signal is set/reset.
The counter continues count-up/-down and waits for the next INTTAUDnIm of master channel.
Setting TAUDnTOL.TAUDnTOLm allows TAUDnTTOUTm signal switching between normal phase and reverse phase during operation.

The counter can be stopped by setting TAUDnTT.TAUDnTTm of master and slave channels to 1. This sets TAUDnTE.TAUDnTEm = 0. TAUDnCNTm and TAUDnTTOUTm of master and slave channels stop but retain their values.

Conditions

This function enables simultaneous rewrite. See **Section 23.6, Simultaneous Rewrite**.

23.13.6.2 Equations

Pulse cycle = (TAUDnCDRm (master) + 1) × count clock cycle

$0000_H \leq$ TAUDnCDRm (master) < $FFFF_H$

Carrier cycle (down/up) = (TAUDnCDRm (master) + 1) × 2 × count clock cycle

Duty cycle [%] =

(TAUDnCDRm (master) + 1 – TAUDnCDRm (slave)) / (TAUDnCDRm (master) + 1) × 100

- Duty cycle = 100%
  TAUDnCDRm (slave) = 0000_H
- Duty cycle = 0%
  TAUDnCDRm (slave) ≥ TAUDnCDRm (master) + 1

23.13.6.3 Block Diagram and General Timing Diagram

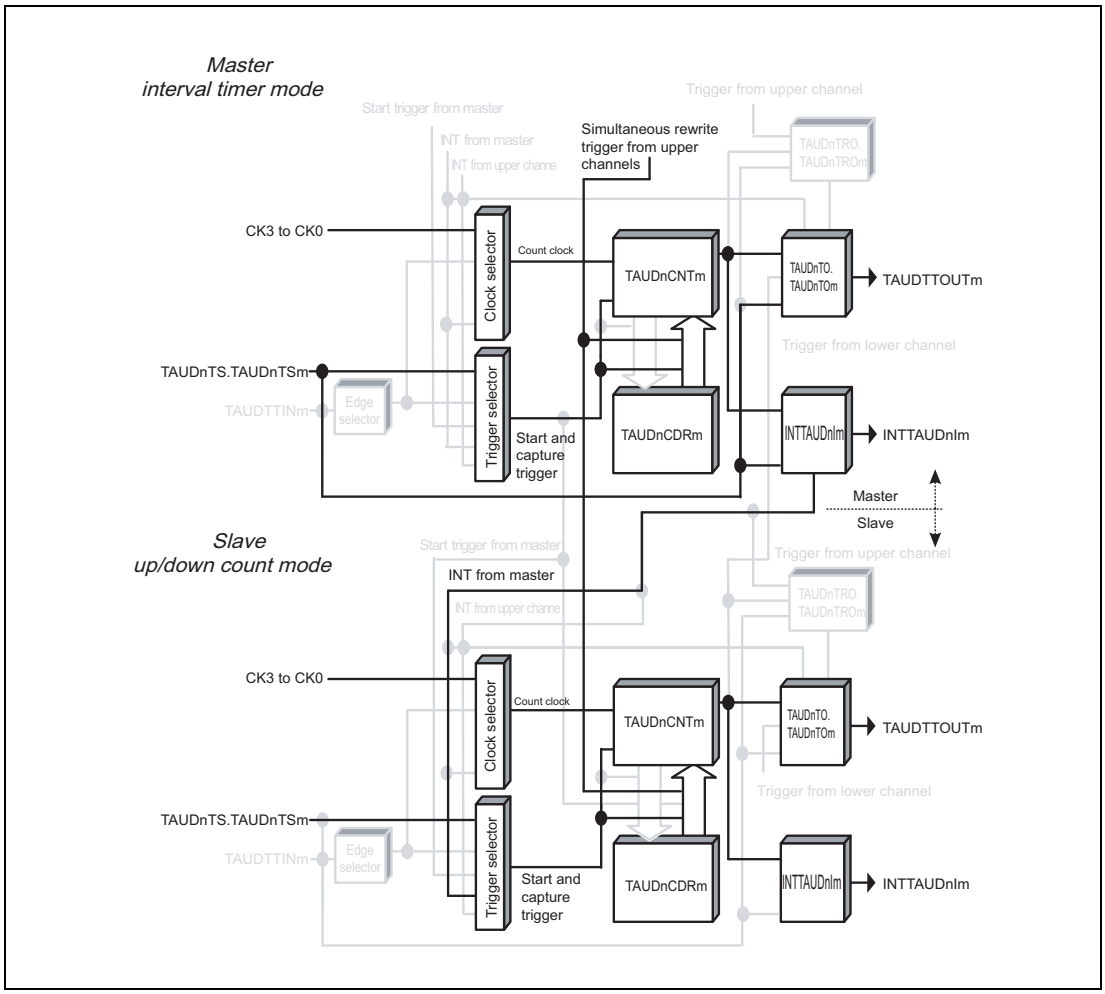

Figure 23.105 Block Diagram of Triangle PWM Output Function

The following settings apply to the general timing diagram.

- Master channel
  - INTTAUDnIm generated at the beginning of operation.
    (TAUDnCMORm.TAUDnMD0 = 1)

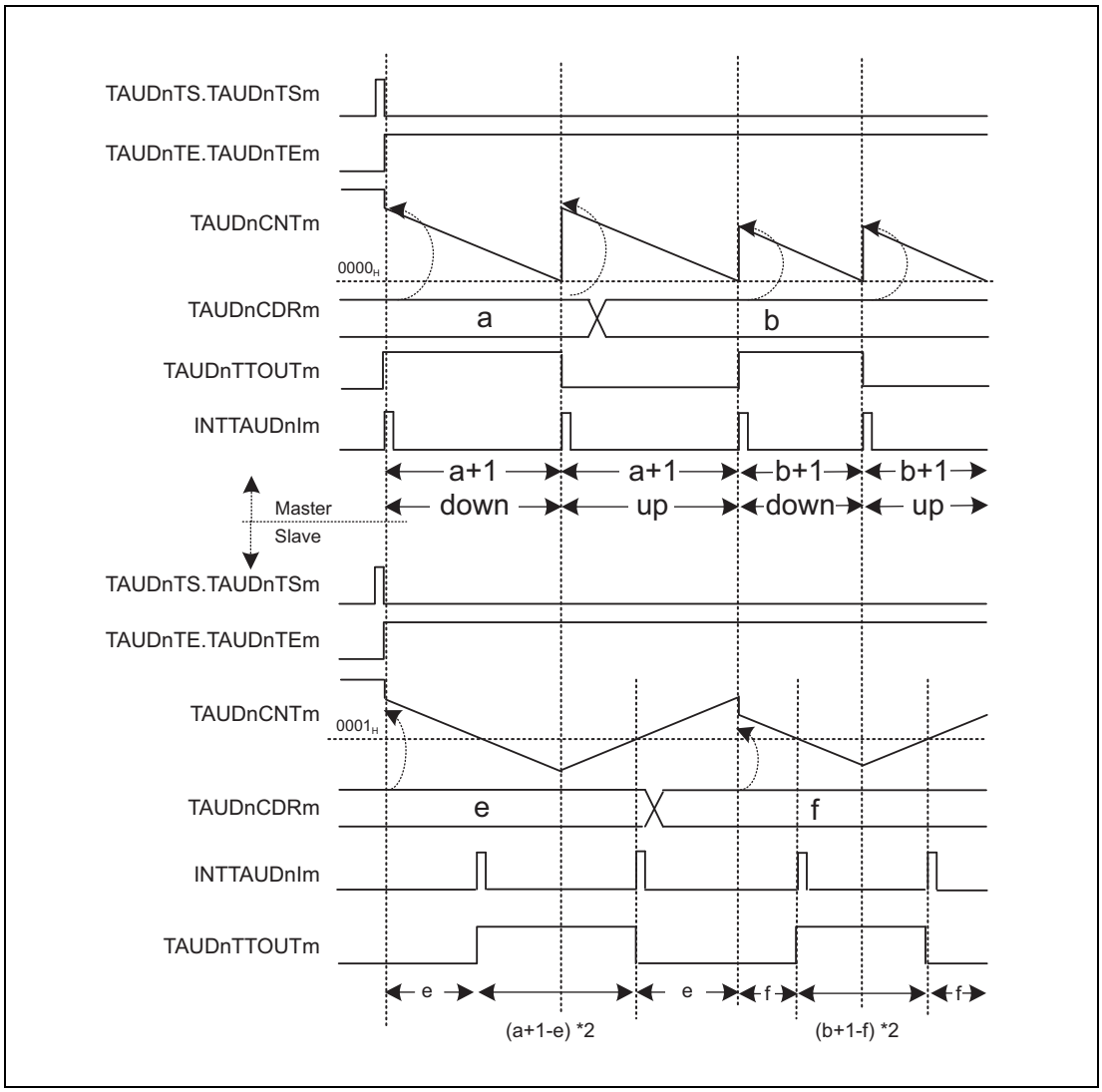

Figure 23.106 General Timing Diagram of Triangle PWM Output Function

23.13.6.4 Register Settings for Master Channels

(1) TAUDnCMORm for master channels

Bit	15	14	13	12	11	10	9	8	7	6	5	4	3	2	1	0
	TAUDnCKS[1:0]		TAUDnCCS[1:0]		TAUDn MAS	TAUDnSTS[2:0]			TAUDnCOS[1:0]		—	TAUDnMD[4:1]				TAUDn MD0
Value after reset	0	0	0	0	0	0	0	0	0	0	0	0	0	0	0	0
R/W	R/W	R/W	R/W	R/W	R/W	R/W	R/W	R/W	R/W	R/W	R	R/W	R/W	R/W	R/W	R/W

Table 23.161 Contents of the TAUDnCMORm register for the Master Channel of the Triangle PWM Output Function

Bit Position	Bit Name	Function
15, 14	TAUDnCKS[1:0]	Operating Clock Selection 00: Prescaler output CK0 01: Prescaler output CK1 10: Prescaler output CK2 11: Prescaler output CK3 The value of the TAUDnCKS[1:0] bit of the master and slave channels must be identical.
13, 12	TAUDnCCS[1:0]	00: Uses an operating clock as a count clock
11	TAUDnMAS	1: Channel is master channel
10 to 8	TAUDnSTS[2:0]	000: Trigger the counter using software.
7, 6	TAUDnCOS[1:0]	00: Unused. Set to 00.
5	Reserved	When read, the value after reset is read. When writing, write the value after reset.
4 to 1	TAUDnMD[4:1]	0000: Interval timer mode
0	TAUDnMD0	0: INTTAUDnIm is not generated to toggle TAUDnTTOUTm at the beginning of an operation. 1: INTTAUDnIm is generated and TAUDnTTOUTm is toggled at the beginning of operation.

(2) TAUDnCMURm for master channels

Bit	7	6	5	4	3	2	1	0
	—	—	—	—	—	—	TAUDnTIS[1:0]	
Value after reset	0	0	0	0	0	0	0	0
R/W	R	R	R	R	R	R	R/W	R/W

Table 23.162 Contents of the TAUDnCMURm register for the Master Channel of the Triangle PWM Output Function

Bit Position	Bit Name	Function
7 to 2	Reserved	When read, the value after reset is read. When writing, write the value after reset.
1, 0	TAUDnTIS[1:0]	00: Unused. Set to 00.

(3) Channel output mode for master channels

Table 23.163 Control Bit Settings in Independent Channel Output Mode 1

Bit Name	Setting
TAUDnTOE.TAUDnTOEm	1: Enables independent channel output mode
TAUDnTOM.TAUDnTOMm	0: Independent channel output
TAUDnTOC.TAUDnTOCm	0: Operating mode 1 (Toggle mode if TAUDnTOM.TAUDnTOMm = 0)
TAUDnTOL.TAUDnTOLm	0: The setting is disabled in toggle mode. (The value is the initial value after reset.)
TAUDnTDE.TAUDnTDEm	0: Disables dead time operation
TAUDnTDM.TAUDnTDMm	0: When dead time operation is disabled (TAUDnTDE.TAUDnTDEm = 0), set these bits to 0
TAUDnTDL.TAUDnTDLm	
TAUDnTRE.TAUDnTREm	0: Disables real-time output
TAUDnTRO.TAUDnTROm	0: When real-time output is disabled (TAUDnTRE.TAUDnTREm = 0), set these bits to 0
TAUDnTRC.TAUDnTRCm	0: Operation as a real-time output trigger channel is prohibited.
TAUDnTME.TAUDnTMEm	0: Disables modulation

(4) Simultaneous rewrite for master channels

Both master and slave channels should have the same simultaneous rewrite settings.

Table 23.164 Simultaneous Rewrite Settings for Master Channels of Triangle PWM Output Function

Bit Name	Setting
TAUDnRDE.TAUDnRDEm	1: Enables simultaneous rewrite.
TAUDnRDS.TAUDnRDSm	0: Selects master channel for simultaneous rewrite triggers. 1: Selects upper channel other than the channel group for simultaneous rewrite triggers.
TAUDnRDM.TAUDnRDMm	1: A simultaneous rewrite trigger signal is generated when master channel starts to count and the corresponding slave channel is at the peak of a triangular wave.
TAUDnRDC.TAUDnRDCm	0: Does not use the channel to generate the simultaneous rewrite trigger.

NOTE

If TAUDnRDS.TAUDnRDSm = 1, it is necessary for an upper channel higher than a master channel to generate a simultaneous rewrite trigger signal.

23.13.6.5 Register Settings for Slave Channels

(1) TAUDnCMORm for slave channels

Bit	15	14	13	12	11	10	9	8	7	6	5	4	3	2	1	0
	TAUDnCKS[1:0]		TAUDnCCS[1:0]		TAUDn MAS	TAUDnSTS[2:0]			TAUDnCOS[1:0]		—	TAUDnMD[4:1]				TAUDn MD0
Value after reset	0	0	0	0	0	0	0	0	0	0	0	0	0	0	0	0
R/W	R/W	R/W	R/W	R/W	R/W	R/W	R/W	R/W	R/W	R/W	R	R/W	R/W	R/W	R/W	R/W

Table 23.165 Contents of the TAUDnCMORm register for the slave channel of the triangle PWM output function

Bit Position	Bit Name	Function
15, 14	TAUDnCKS[1:0]	Operating Clock Selection 00: Prescaler output CK0 01: Prescaler output CK1 10: Prescaler output CK2 11: Prescaler output CK3 The value of the TAUDnCKS[1:0] bit of the master and slave channels must be identical.
13, 12	TAUDnCCS[1:0]	00: Uses an operating clock as a count clock
11	TAUDnMAS	0: Slave channel
10 to 8	TAUDnSTS[2:0]	111: Up/down output trigger signal of master channel
7, 6	TAUDnCOS[1:0]	00: Unused. Set to 00.
5	Reserved	When read, the value after reset is read. When writing, write the value after reset.
4 to 1	TAUDnMD[4:1]	1001: Up/down count mode
0	TAUDnMD0	0: INTTAUDnIm not generated at the beginning of operation.

(2) TAUDnCMURm for slave channels

Bit	7	6	5	4	3	2	1	0
	—	—	—	—	—	—	TAUDnTIS[1:0]	
Value after reset	0	0	0	0	0	0	0	0
R/W	R	R	R	R	R	R	R/W	R/W

Table 23.166 Contents of the TAUDnCMURm register for the slave channel of the triangle PWM output function

Bit Position	Bit Name	Function
7 to 2	Reserved	When read, the value after reset is read. When writing, write the value after reset.
1, 0	TAUDnTIS[1:0]	00: Unused. Set to 00.

(3) Channel output mode for slave channels

Table 23.167 Control Bit Settings in Synchronous Channel Output Mode 2

Bit Name	Setting
TAUDnTOE.TAUDnTOEm	1: Enables independent channel output mode
TAUDnTOM.TAUDnTOMm	1: Synchronous channel operation
TAUDnTOC.TAUDnTOCm	1: Operating mode 2
TAUDnTOL.TAUDnTOLm	0: Positive logic 1: Negative logic
TAUDnTDE.TAUDnTDEm	0: Disables dead time operation
TAUDnTDM.TAUDnTDMm	0: When dead time operation is disabled (TAUDnTDE.TAUDnTDEm = 0), set these bits to 0
TAUDnTDL.TAUDnTDLm	
TAUDnTRE.TAUDnTREm	0: Disables real-time output
TAUDnTRO.TAUDnTROm	0: When real-time output is disabled (TAUDnTRE.TAUDnTREm = 0), set these bits to 0
TAUDnTRC.TAUDnTRCm	0: Operation as a real-time output trigger channel is prohibited.
TAUDnTME.TAUDnTMEm	0: Disables modulation

(4) Simultaneous rewrite for slave channels

Both master and slave channels should have the same simultaneous rewrite settings.

Table 23.168 Simultaneous Rewrite Settings for Slave Channels of Triangle PWM Output Function

Bit Name	Setting
TAUDnRDE.TAUDnRDEm	1: Enables simultaneous rewrite.
TAUDnRDS.TAUDnRDSm	0: Selects master channel for simultaneous rewrite triggers. 1: Selects upper channel for simultaneous rewrite triggers.
TAUDnRDM.TAUDnRDMm	1: A simultaneous rewrite trigger signal is generated when master channel starts to count and the corresponding slave channel is at the peak of a triangular wave.
TAUDnRDC.TAUDnRDCm	0: Does not use the channel to generate the simultaneous rewrite trigger.

23.13.6.6 Operating Procedure for Triangle PWM Output Function

Table 23.169 Operating Procedure for Triangle PWM Output Function

	Operation	TAUDn Status
Initial Channel Setting	Master channels: Set TAUDnCMORm/ TAUDnCMURm register and the channel output mode as described in **Section 23.13.6.4, Register Settings for Master Channels**. Slave channels: Set TAUDnCMORm/ TAUDnCMURm register and the channel output mode as described in **Section 23.13.6.5, Register Settings for Slave Channels**. Set the value of TAUDnCDRm register of every channel.	Channel operation is stopped.
Start Operation	Set TAUDnTS.TAUDnTSm of master and slave channels to 1 simultaneously. TAUDnTS.TAUDnTSm is a trigger bit, which is automatically cleared to 0.	TAUDnTE.TAUDnTEm (master and slave channels) is set to 1 and the counters of master and slave channels start. INTTAUDnIm (master) is generated on the master channel if TAUDnCMORm.TAUDnMD0 is set to 1.
During Operation	TAUDnCDRm can be changed at any time. TAUDnCNTm and TAUDnRSF.TAUDnRSFm can be read at any time. TAUDnTOL.TAUDnTOLm can be changed. TAUDnRDT.TAUDnRDTm can be changed during operation.	TAUDnCDRm value of master and slave channels is loaded into TAUDnCNTm to perform counting down. When the counter of master channel reaches 0000_H: • INTTAUDnIm (master) occurs. • TAUDnTTOUTm (master) is toggled. • TAUDnCDRm value is reloaded into TAUDnCNTm (master) to continue count operation. • TAUDnCDRm value is reloaded into TAUDnCNTm (slave) or counting is started in opposite direction. When TAUDnCNTm of slave channel reaches 0001_H: • INTTAUDnIm (slave) occurs. • TAUDnTTOUTm (slave) is set in the count-down status or reset in count-up status.
Stop Operation	Set TAUDnTT.TAUDnTTm of master and slave channels to 1 simultaneously. TAUDnTT.TAUDnTTm is a trigger bit, which is automatically cleared to 0.	TAUDnTE.TAUDnTEm is cleared to 0 and the counter stops. TAUDnCNTm and TAUDnTTOUTm stop and retain their current values.

Restart

23.13.6.7 Specific Timing Diagrams

(1) Duty cycle = 0%

The following settings apply to the general timing diagram.

- Master channel:
  - INTTAUDnIm generated at the beginning of operation. (TAUDnCMORm.TAUDnMD0 = 1)
  - TAUDnCDRm = a = 5_H
- Slave channels:
  - TAUDnCDRm = 6_H

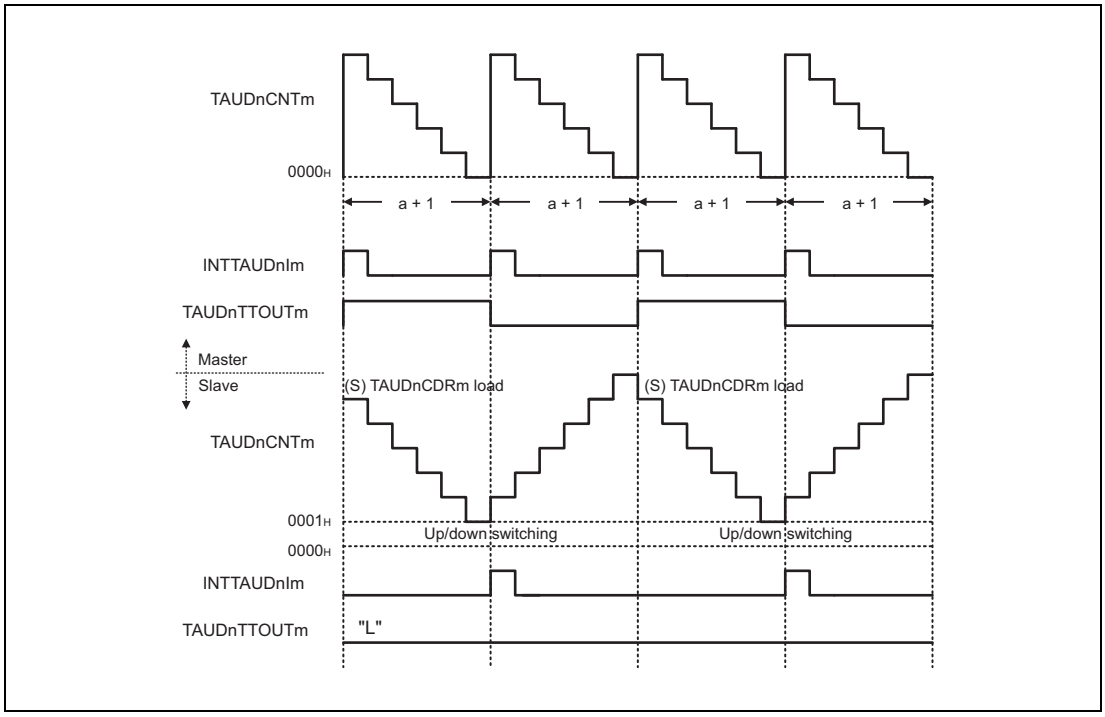

Figure 23.107 TAUDnCDRm (Slave) ≥ TAUDnCDRm (Master) + 1

- If TAUDnCDRm (slave) value is greater than TAUDnCDRm (master) value + 1, INTTAUDnIm of the slave channel is not generated while counting down. TAUDnTTOUTm remains low because there is no set signal to be detected.

(2) Duty cycle = 100%

The following settings apply to the general timing diagram.

- Master channel:
  - INTTAUDnIm generated at the beginning of operation. (TAUDnCMORm.TAUDnMD0 = 1)
  - TAUDnCDRm = a = 5_H
- Slave channels:
  - TAUDnCDRm = 0_H

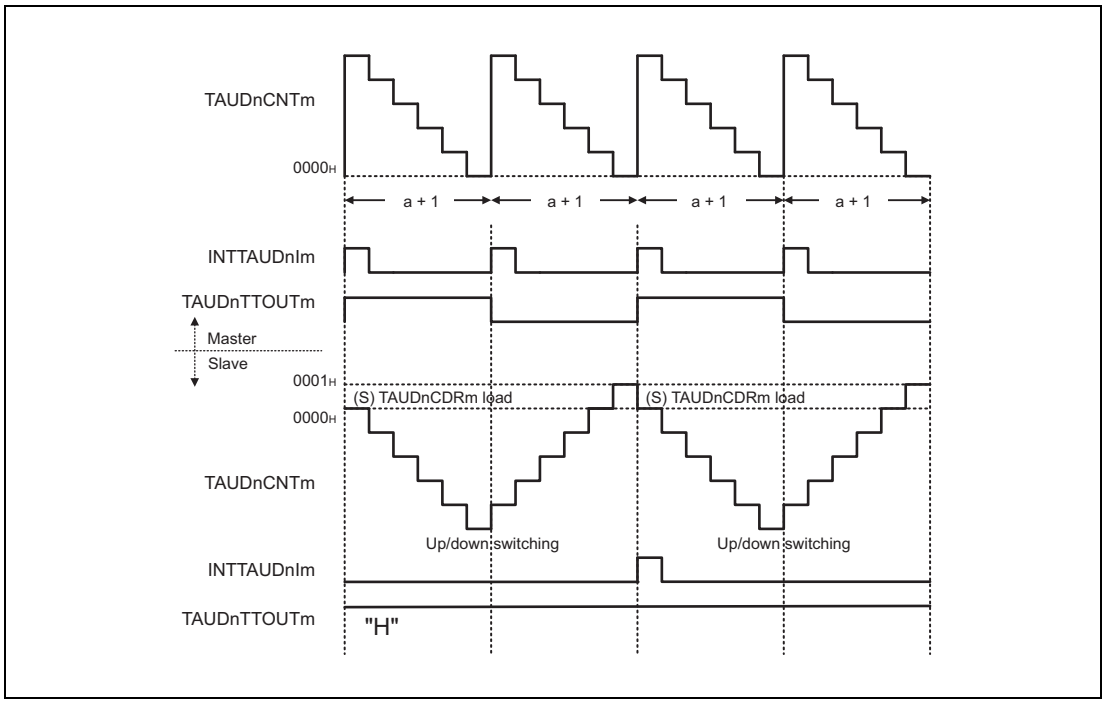

Figure 23.108 TAUDnCDRm (Slave) = 0000_H

- If TAUDnCDRm (slave) = 0000_H, INTTAUBnIm of slave channel is not generated while counting up. TAUDnTTOUTm remains high because there is no reset signal to be detected.

23.13.7 Triangle PWM Output Function with Dead Time

23.13.7.1 Overview

Summary

This function generates multiple triangle PWM outputs with a predefined dead time added by using a master and two or more slave channels. The resulting PWM signals are output via TAUDnTTOUTm of the slave channels 2 and 3, enabling the pulse cycle (frequency) and the duty cycle of TAUDnTTOUTm to be set using the master and slave channels.

Carrier cycles are generated on master channel. The first pulse controls the down status of slave counter and the second one controls the up status.

An interrupt on slave 2 causes TAUDnTTOUTm of slave channels to be set/reset. Depending on the settings of TAUDnTDL.TAUDnTDLm, delay time is added to positive or negative logic side of the signal (i.e., whether TAUDnTTOUTm is set/reset immediately or after dead time has elapsed). The duration of the dead time is specified by slave channel 3.

Prerequisites

- Three channels. For slave channels 2 and 3, select even-numbered channel CH (a) and odd-numbered channel CH (a + 1).
- The operating mode for master channels should be set to interval timer mode. (See **Table 23.171, Contents of the TAUDnCMORm register for the Master Channel of the Triangle PWM Output Function with dead time**)
- Slave channel 1 is not used for this function. This ensures that slave channel 2 is an even-numbered channel (a), and slave channel 3 is an odd-numbered channel (a + 1). Slave channel 1 can be used as a separate timer (independent function).
- The operating mode for slave channel 2 should be set to up/down count mode (See **Table 23.175, Contents of the TAUDnCMORm register for the Slave Channel 2 of the Triangle PWM Output Function with Dead Time**). Slave channel 2 should be an even-numbered channel.
- The operating mode for slave channel 3 should be set to one-count mode (See **Table 23.179, Contents of the TAUDnCMORm register for the Slave Channel 3 of the Triangle PWM Output Function with Dead Time**). Slave channel 3 should be an odd-numbered channel.
- The channel output mode for master channels should be set to independent channel output mode 1. (See **Section 23.7, Channel Output Modes**)
- The output mode for slave channels 2 and 3 should be set to synchronous channel output mode 2 with dead time output. (See **Section 23.7, Channel Output Modes**)

- The following settings make a TAUDnTTOUTm signal at high level during the down status of the carrier cycle:
  - If TAUDnCMORm.TAUDnMD0 (master) bit is set to 0, TAUDnTO.TAUDnTOm should be set to 1 while TAUDnTOE.TAUDnTOEm is set to 0. (recommended setting)
  - If TAUDnCMORm.TAUDnMD0 (master) bit is set to 1, TAUDnTO.TAUDnTOm should be set to 0 while TAUDnTOE.TAUDnTOEm is set to 0.

NOTE

The triangle PWM output function with dead time does not use slave channel 1. Slave channel 1 can be used as a separate timer (independent function).

Functional description

The counter starts by setting the channel trigger bit (TAUDnTS.TAUDnTSm) to 1. This makes TAUDnTE.TAUDnTEm = 1, enabling count operation. The current value of TAUDnCDRm is loaded into TAUDnCNTm and the counter starts to count down from the TAUDnCDRm value. If TAUDnCMORm.TAUDnMD0 bit of master channel is set to 1, an interrupt is generated and the master's TAUDnTTOUTm signal is toggled.

- Master channel:
  When the counter of master channel reaches 0000_H, an INTTAUDnIm is generated and the TAUDnTTOUTm signal is toggled. The TAUDnCDRm value is reloaded to continue countdown.
- Slave channel 2:
  If INTTAUDnIm is generated on the master channel, the counter of slave channel 2 is triggered.
  - If the slave counter is counting down, the counting direction changes.
  - If the slave counter is counting up, the TAUDnCDRm value is reloaded and the counter starts to count down.

  The counter continues to count down/up and waits for the next INTTAUDnIm of master channel. When the counter value of slave channel 2 reaches 0001_H, INTTAUDnIm is generated.
- Slave channel 3:
  If INTTAUDnIm is generated on slave channel 2, the counter of slave channel 3 is triggered. The current value of TAUDnCDRm (slave 3) is loaded into TAUDnCNTm (slave 3) and the counter starts to count down from the TAUDnCDRm value.
  When the counter reaches 0000_H, INTTAUDnIm occurs. The counter returns to $FFFF_H$ and waits for the next INTTAUDnIm of slave channel 2.

As described in **Table 23.170, Operation of TAUDnTTOUTm upon Occurrence of an Interrupt on Slave Channel 2**, the set/reset timing (right after occurrence of an interrupt or after dead time has elapsed) depends on the TAUDnTDL.TAUDnTDLm setting of the corresponding channel.

The setting of TAUDnTOL.TAUDnTOLm also determines whether a high level signal (TAUDnTOL.TAUDnTOLm = 0) or a low level signal (TAUDnTOL.TAUDnTOLm = 1) is output from the corresponding channel.

The counter can be stopped by setting TAUDnTT.TAUDnTTm of master and slave channels to 1. This sets TAUDnTE.TAUDnTEm to 0. TAUDnCNTm and TAUDnTTOUTm of master and slave channels stop but retain their values.

TAUDnTTOUTm can be 100% output by setting the TAUDnCDRm value of slave channel 2 to 0000_H.

Conditions

This function enables simultaneous rewrite. See **Section 23.6, Simultaneous Rewrite**.

TAUDnTOL.TAUDnTOLm and TAUDnTDL.TAUDnTDLm should be set before start of count operation. Slave channels 2 and 3 should have the opposite settings of TAUDnTOL.TAUDnTOLm or TAUDnTDL.TAUDnTDLm.

Table 23.170 Operation of TAUDnTTOUTm upon Occurrence of an Interrupt on Slave Channel 2

TAUDnTDL. TAUDnTDLm	Count Direction of Slave Channel 2 upon Occurrence of Interrupt	TAUDnTTOUTm Set/Reset Timing
0	Down	Set after elapse of dead time
	Up	Reset right after interrupt occurs
1	Down	Set right after interrupt occurs
	Up	Reset after elapse of dead time

23.13.7.2 Equations

Pulse cycle = (TAUDnCDRm (master) + 1) × count clock cycle

$0000_H \leq$ TAUDnCDRm (master) < $FFFF_H$

Carrier cycle (down/up) = (TAUDnCDRm (master) + 1) × 2 × count clock cycle

PWM signal width (normal phase) = [(TAUDnCDRm (master) + 1 – TAUDnCDRm (slave 2)) × 2 – (TAUDnCDRm (slave 3) + 1)] × count clock cycle

PWM signal width (reverse phase) = [(TAUDnCDRm (master) + 1 – TAUDnCDRm (slave 2)) × 2 + (TAUDnCDRm (slave 3) + 1)] × count clock cycle

23.13.7.3 Block Diagram and General Timing Diagram

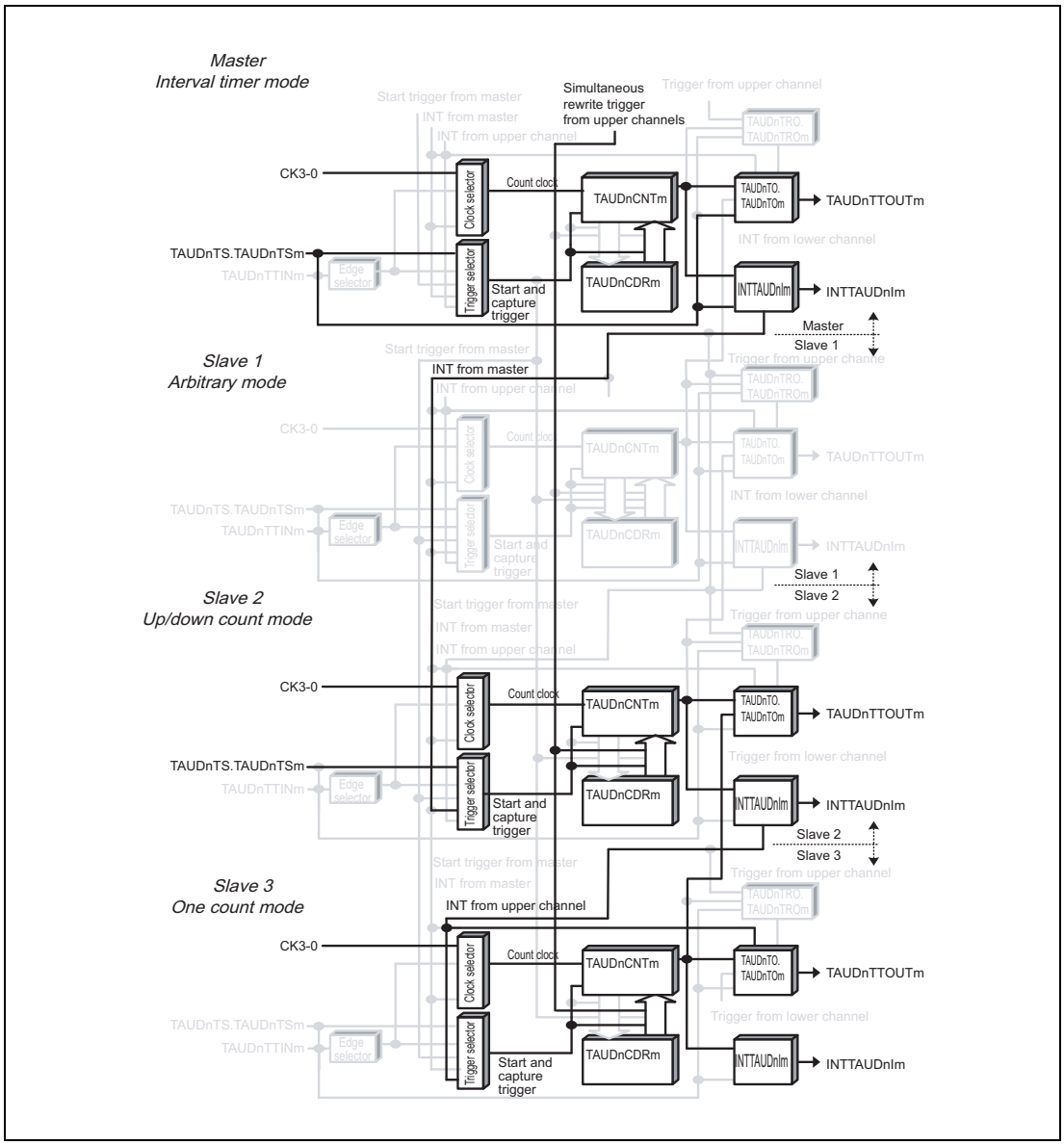

Figure 23.109 Block Diagram of Triangle PWM Output Function with Dead Time

The following settings apply to the general timing diagram.

- Master channel:
  - INTTAUDnIm generated at the beginning of operation. (TAUDnCMORm.TAUDnMD0 = 1)
- Slave channel 2:
  - INTTAUDnIm not generated at the beginning of operation. (TAUDnCMORm.TAUDnMD0 = 0)
  - TAUDnTDL.TAUDnTDLm = 0
  - Positive logic (TAUDnTOL.TAUDnTOLm = 0)

- Slave channel 3:
  - Start trigger detection enabled during counting (TAUDnCMORm.TAUDnMD0 = 1)
  - TAUDnTDL.TAUDnTDLm = 1
  - Positive logic (TAUDnTOL.TAUDnTOLm = 0)

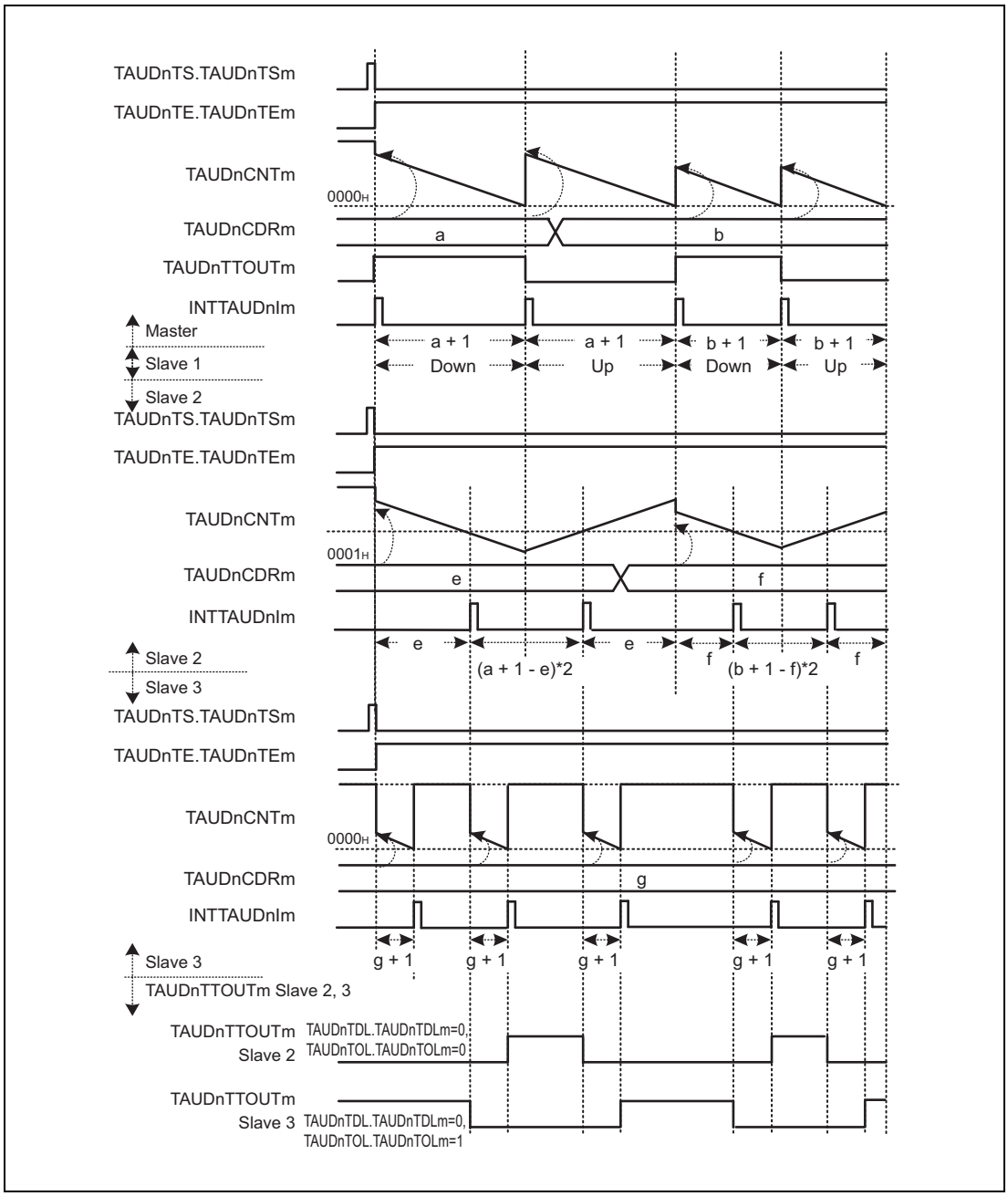

Figure 23.110 General Timing Diagram of Triangle PWM Output Function with Dead Time

23.13.7.4 Register Settings for Master Channels

(1) TAUDnCMORm for master channels

Bit	15	14	13	12	11	10	9	8	7	6	5	4	3	2	1	0
	TAUDnCKS[1:0]		TAUDnCCS[1:0]		TAUDn MAS	TAUDnSTS[2:0]			TAUDnCOS[1:0]		—	TAUDnMD[4:1]				TAUDn MD0
Value after reset	0	0	0	0	0	0	0	0	0	0	0	0	0	0	0	0
R/W	R/W	R/W	R/W	R/W	R/W	R/W	R/W	R/W	R/W	R/W	R	R/W	R/W	R/W	R/W	R/W

Table 23.171 Contents of the TAUDnCMORm register for the Master Channel of the Triangle PWM Output Function with dead time

Bit Position	Bit Name	Function
15, 14	TAUDnCKS[1:0]	Operating Clock Selection 00: Prescaler output CK0 01: Prescaler output CK1 10: Prescaler output CK2 11: Prescaler output CK3 The value of the TAUDnCKS[1:0] bit of the master and slave channels must be identical.
13, 12	TAUDnCCS[1:0]	00: Uses an operating clock as a count clock
11	TAUDnMAS	1: Channel is master channel
10 to 8	TAUDnSTS[2:0]	000: Trigger the counter using software.
7, 6	TAUDnCOS[1:0]	00: Unused. Set to 00.
5	Reserved	When read, the value after reset is read. When writing, write the value after reset.
4 to 1	TAUDnMD[4:1]	0000: Interval timer mode
0	TAUDnMD0	0: INTTAUDnIm is not generated and TAUDnTTOUTm is not toggled at the beginning of operation. 1: INTTAUDnIm is generated and TAUDnTTOUTm is toggled at the beginning of operation.

(2) TAUDnCMURm for master channels

Bit	7	6	5	4	3	2	1	0
	—	—	—	—	—	—	TAUDnTIS[1:0]	
Value after reset	0	0	0	0	0	0	0	0
R/W	R	R	R	R	R	R	R/W	R/W

Table 23.172 Contents of the TAUDnCMURm register for the Master Channel of the Triangle PWM Output Function with dead time

Bit Position	Bit Name	Function
7 to 2	Reserved	When read, the value after reset is read. When writing, write the value after reset.
1, 0	TAUDnTIS[1:0]	00: Unused. Set to 00.

(3) Channel output mode for master channels

Table 23.173 Control Bit Settings in Independent Channel Output Mode 1

Bit Name	Setting
TAUDnTOE.TAUDnTOEm	1: Enables independent channel output mode
TAUDnTOM.TAUDnTOMm	0: Independent channel output
TAUDnTOC.TAUDnTOCm	0: Operating mode 1 (Toggle mode if TAUDnTOM.TAUDnTOMm = 0)
TAUDnTOL.TAUDnTOLm	0: The setting is disabled in toggle mode (The value after reset).
TAUDnTDE.TAUDnTDEm	0: Disables dead time operation
TAUDnTDM.TAUDnTDMm	0: When dead time operation is disabled (TAUDnTDE.TAUDnTDEm = 0), set these bits to 0
TAUDnTDL.TAUDnTDLm	
TAUDnTRE.TAUDnTREm	0: Disables real-time output
TAUDnTRO.TAUDnTROm	0: When real-time output is disabled (TAUDnTRE.TAUDnTREm = 0), set these bits to 0
TAUDnTRC.TAUDnTRCm	0: Operation as a real-time output trigger channel is prohibited.
TAUDnTME.TAUDnTMEm	0: Disables modulation

(4) Simultaneous rewrite for master channels

Both master and slave channels should have the same simultaneous rewrite settings.

Table 23.174 Simultaneous Rewrite Setting for Master Channels of Triangle PWM Output Function with Dead Time

Bit Name	Setting
TAUDnRDE.TAUDnRDEm	1: Enables simultaneous rewrite.
TAUDnRDS.TAUDnRDSm	0: Selects master channel for simultaneous rewrite triggers. 1: Selects upper channel other than the channel group for simultaneous rewrite triggers.
TAUDnRDM.TAUDnRDMm	1: A simultaneous rewrite trigger signal is generated when master channel starts to count and the corresponding slave channel is at the peak of a triangular wave.
TAUDnRDC.TAUDnRDCm	0: Does not operate as a simultaneous rewrite trigger generation channel.

NOTE

If TAUDnRDS.TAUDnRDSm = 1, it is necessary for an upper channel higher than a master channel to generate a simultaneous rewrite trigger signal.

23.13.7.5 Register Settings for Slave Channel 2

(1) TAUDnCMORm for slave channel 2

Bit	15	14	13	12	11	10	9	8	7	6	5	4	3	2	1	0
	TAUDnCKS[1:0]		TAUDnCCS[1:0]		TAUDn MAS	TAUDnSTS[2:0]			TAUDnCOS[1:0]		—	TAUDnMD[4:1]				TAUDn MD0
Value after reset	0	0	0	0	0	0	0	0	0	0	0	0	0	0	0	0
R/W	R/W	R/W	R/W	R/W	R/W	R/W	R/W	R/W	R/W	R/W	R	R/W	R/W	R/W	R/W	R/W

Table 23.175 Contents of the TAUDnCMORm register for the Slave Channel 2 of the Triangle PWM Output Function with Dead Time

Bit Position	Bit Name	Function
15, 14	TAUDnCKS[1:0]	Operating Clock Selection 00: Prescaler output CK0 01: Prescaler output CK1 10: Prescaler output CK2 11: Prescaler output CK3 The value of the TAUDnCKS[1:0] bit of the master and slave channels must be identical.
13, 12	TAUDnCCS[1:0]	00: Uses an operating clock as a count clock
11	TAUDnMAS	0: Slave channel
10 to 8	TAUDnSTS[2:0]	111: Up/down output trigger signal of master channel
7, 6	TAUDnCOS[1:0]	00: Unused. Set to 00.
5	Reserved	When read, the value after reset is read. When writing, write the value after reset.
4 to 1	TAUDnMD[4:1]	1001: Up/down count mode
0	TAUDnMD0	0: INTTAUDnIm not generated at the beginning of operation.

(2) TAUDnCMURm for slave channel 2

Bit	7	6	5	4	3	2	1	0
	—	—	—	—	—	—	TAUDnTIS[1:0]	
Value after reset	0	0	0	0	0	0	0	0
R/W	R	R	R	R	R	R	R/W	R/W

Table 23.176 Contents of the TAUDnCMURm register for the Slave Channel 2 of the Triangle PWM Output Function with Dead Time

Bit Position	Bit Name	Function
7 to 2	Reserved	When read, the value after reset is read. When writing, write the value after reset.
1, 0	TAUDnTIS[1:0]	00: Unused. Set to 00.

(3) Channel output mode for slave channel 2

Table 23.177 Control Bit Settings in Synchronous Channel Output Mode 2 with Dead Time Output

Bit Name	Setting
TAUDnTOE.TAUDnTOEm	1: Enables independent channel output mode
TAUDnTOM.TAUDnTOMm	1: Synchronous channel operation
TAUDnTOC.TAUDnTOCm	1: Operating mode 2
TAUDnTOL.TAUDnTOLm	0: Positive logic 1: Negative logic
TAUDnTDE.TAUDnTDEm	1: Enables dead time operation.
TAUDnTDM.TAUDnTDMm	0: Adds dead time if an interrupt is detected on an even-numbered upper channel and the conditions set by TAUDnTDL.TAUDnTDLm are satisfied.
TAUDnTDL.TAUDnTDLm	0: Adds dead time to normal phase. 1: Adds dead time to reverse phase.
TAUDnTRE.TAUDnTREm	0: Disables real-time output
TAUDnTRO.TAUDnTROm	0: When real-time output is disabled (TAUDnTRE.TAUDnTREm = 0), set these bits to 0
TAUDnTRC.TAUDnTRCm	0: Operation as a real-time output trigger channel is prohibited.
TAUDnTME.TAUDnTMEm	0: Disables modulation

CAUTION

Set TAUDnTDL.TAUDnTDLm exclusively from odd-numbered channels.

(4) Simultaneous rewrite for slave channel 2

Both master and slave channels should have the same simultaneous rewrite settings.

Table 23.178 Simultaneous Rewrite Settings for Slave Channel 2 of Triangle PWM Output Function

Bit Name	Setting
TAUDnRDE.TAUDnRDEm	1: Enables simultaneous rewrite.
TAUDnRDS.TAUDnRDSm	0: Selects master channel for simultaneous rewrite triggers. 1: Selects upper channel other than the channel group for simultaneous rewrite triggers.
TAUDnRDM.TAUDnRDMm	1: A simultaneous rewrite trigger signal is generated when master channel starts to count and the corresponding slave channel is at the peak of a triangular wave.
TAUDnRDC.TAUDnRDCm	0: Does not operate as a simultaneous rewrite trigger generation channel.

23.13.7.6 Register Settings for Slave Channel 3

(1) TAUDnCMORm for slave channel 3

Bit	15	14	13	12	11	10	9	8	7	6	5	4	3	2	1	0
	TAUDnCKS[1:0]		TAUDnCCS[1:0]		TAUDn MAS	TAUDnSTS[2:0]			TAUDnCOS[1:0]		—	TAUDnMD[4:1]				TAUDn MD0
Value after reset	0	0	0	0	0	0	0	0	0	0	0	0	0	0	0	0
R/W	R/W	R/W	R/W	R/W	R/W	R/W	R/W	R/W	R/W	R/W	R	R/W	R/W	R/W	R/W	R/W

Table 23.179 Contents of the TAUDnCMORm register for the Slave Channel 3 of the Triangle PWM Output Function with Dead Time

Bit Position	Bit Name	Function
15, 14	TAUDnCKS[1:0]	Operating Clock Selection 00: Prescaler output CK0 01: Prescaler output CK1 10: Prescaler output CK2 11: Prescaler output CK3 The value of the TAUDnCKS[1:0] bit of the master and slave channels must be identical.
13, 12	TAUDnCCS[1:0]	00: Uses an operating clock as a count clock
11	TAUDnMAS	0: Slave channel
10 to 8	TAUDnSTS[2:0]	110: The up/down output trigger signal TAUDnUDCm of the master channel is the start trigger
7, 6	TAUDnCOS[1:0]	00: Unused. Set to 00.
5	Reserved	When read, the value after reset is read. When writing, write the value after reset.
4 to 1	TAUDnMD[4:1]	0100: One-count mode
0	TAUDnMD0	1: Enables start trigger detection while counting.

(2) TAUDnCMURm for slave channel 3

Bit	7	6	5	4	3	2	1	0
	—	—	—	—	—	—	TAUDnTIS[1:0]	
Value after reset	0	0	0	0	0	0	0	0
R/W	R	R	R	R	R	R	R/W	R/W

Table 23.180 Contents of the TAUDnCMURm register for the Slave Channel 3 of the Triangle PWM Output Function with Dead Time

Bit Position	Bit Name	Function
7 to 2	Reserved	When read, the value after reset is read. When writing, write the value after reset.
1, 0	TAUDnTIS[1:0]	00: Unused. Set to 00.

(3) Channel output mode for slave channel 3

Table 23.181 Control Bit Settings in Synchronous Channel Output Mode 2 with Dead Time Output

Bit Name	Setting
TAUDnTOE.TAUDnTOEm	1: Enables independent channel output mode
TAUDnTOM.TAUDnTOMm	1: Synchronous channel operation
TAUDnTOC.TAUDnTOCm	1: Operating mode 2
TAUDnTOL.TAUDnTOLm	0: Positive logic 1: Negative logic
TAUDnTDE.TAUDnTDEm	1: Enables dead time operation.
TAUDnTDM.TAUDnTDMm	0: Adds dead time if an interrupt is detected on an even-numbered upper channel and the conditions set by TAUDnTDL.TAUDnTDLm are satisfied.
TAUDnTDL.TAUDnTDLm	0: Adds dead time to normal phase. 1: Adds dead time to reverse phase.
TAUDnTRE.TAUDnTREm	0: Disables real-time output
TAUDnTRO.TAUDnTROm	0: When real-time output is disabled (TAUDnTRE.TAUDnTREm = 0), set these bits to 0
TAUDnTRC.TAUDnTRCm	0: Operation as a real-time output trigger channel is prohibited.
TAUDnTME.TAUDnTMEm	0: Disables modulation

CAUTION

Set TAUDnTDL.TAUDnTDLm exclusively from even-numbered channels.

(4) Simultaneous rewrite for slave channel 3

Both master and slave channels should have the same simultaneous rewrite settings.

Table 23.182 Simultaneous Rewrite Settings for Slave Channel 3 of Triangle PWM Output Function

Bit Name	Setting
TAUDnRDE.TAUDnRDEm	1: Enables simultaneous rewrite.
TAUDnRDS.TAUDnRDSm	0: Selects master channel for simultaneous rewrite triggers. 1: Selects upper channel other than the channel group for simultaneous rewrite triggers.
TAUDnRDM.TAUDnRDMm	1: A simultaneous rewrite trigger signal is generated when master channel starts to count and the corresponding slave channel is at the peak of a triangular wave.
TAUDnRDC.TAUDnRDCm	0: Does not operate as a simultaneous rewrite trigger generation channel.

23.13.7.7 Operating Procedure for Triangle PWM Output Function with Dead Time

Table 23.183 Operating Procedure for Triangle PWM Output Function with Dead Time

	Operation	TAUDn Status
Initial Channel Setting	Master channels: Set TAUDnCMORm/ TAUDnCMURm register and the channel output mode as described in **Section 23.13.7.4, Register Settings for Master Channels**. Slave channel 2: Set TAUDnCMORm/ TAUDnCMURm register and the channel output mode as described in **Section 23.13.7.5, Register Settings for Slave Channel 2**. Slave channel 3: Set TAUDnCMORm/ TAUDnCMURm register and the channel output mode as described in **Section 23.13.7.6, Register Settings for Slave Channel 3**. Set the value of TAUDnCDRm register of every channel.	Channel operation is stopped.
Start Operation	Set TAUDnTS.TAUDnTSm of master and slave channels to 1 simultaneously. TAUDnTS.TAUDnTSm is a trigger bit, which is automatically cleared to 0.	TAUDnTE.TAUDnTEm (master and slave channels) is set to 1 and the counters of master and slave channels start. INTTAUDnIm (master) is generated on the master channel if TAUDnCMORm.TAUDnMD0 is set to 1.
During Operation	TAUDnCDRm can be changed at any time. TAUDnCNTm and TAUDnRSF.TAUDnRSFm can be read at any time. TAUDnRDT.TAUDnRDTm can be changed during operation.	TAUDnCDRm value of master channel and slave channel 2 is loaded into TAUDnCNTm to perform counting down. When the counter of master channel reaches 0000_H: • INTTAUDnIm (master) occurs. • TAUDnCDRm value is reloaded into TAUDnCNTm (master) to continue count operation. • TAUDnCDRm value is reloaded into TAUDnCNTm (slave 2) or counting is started in opposite direction. When TAUDnCNTm of slave channel 2 reaches 0001_H: • IINTTAUDnIm (slave 2) is generated. • TAUDnCDRm value of slave channel 3 is loaded into TAUDnCNTm perform counting down. When TAUDnCNTm of slave channel 3 reaches 0000_H: • INTTAUDnIm is generated.
Stop Operation	Set TAUDnTT.TAUDnTTm of master and slave channels to 1 simultaneously. TAUDnTT.TAUDnTTm is a trigger bit, which is automatically cleared to 0.	TAUDnTE.TAUDnTEm is cleared to 0 and the counter stops. TAUDnCNTm and TAUDnTTOUTm stop and retain their current values.

Restart

23.13.7.8 Specific Timing Diagrams

(1) Duty cycle = 0%

The following settings apply to the general timing diagram.

- Slave channel 2:
  - Positive logic (TAUDnTDL.TAUDnTDLm = 0)
- Slave channel 3:
  - Negative logic (TAUDnTDL.TAUDnTDLm = 1)

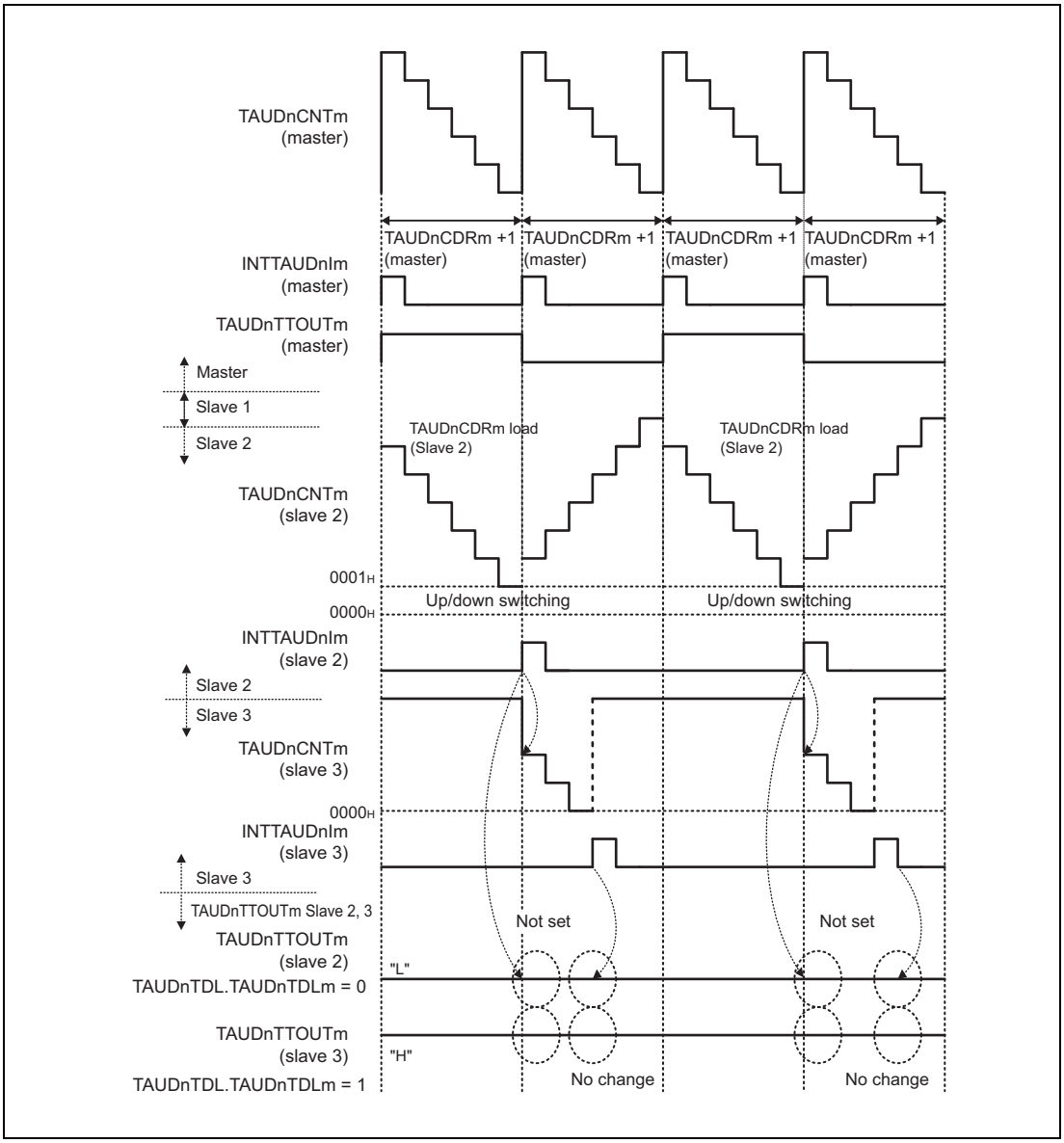

Figure 23.111 TAUDnCDRm (Slave 2) ≥ TAUDnCDRm (Master) + 1

- If TAUDnCDRm (slave 2) is greater than TAUDnCDRm (master), the counter of slave channel does not reach 0000_H while counting down. Therefore, TAUDnTTOUTm signal is not set/reset and remains initial. This signal becomes a reset signal because an interrupt occurs on slave channel 2 during count-up operation.

(2) Duty cycle = 100%

The following settings apply to the general timing diagram.

- Slave channel 2:
  - Positive logic (TAUDnTDL.TAUDnTDLm = 0)
- Slave channel 3:
  - Negative logic (TAUDnTDL.TAUDnTDLm = 1)

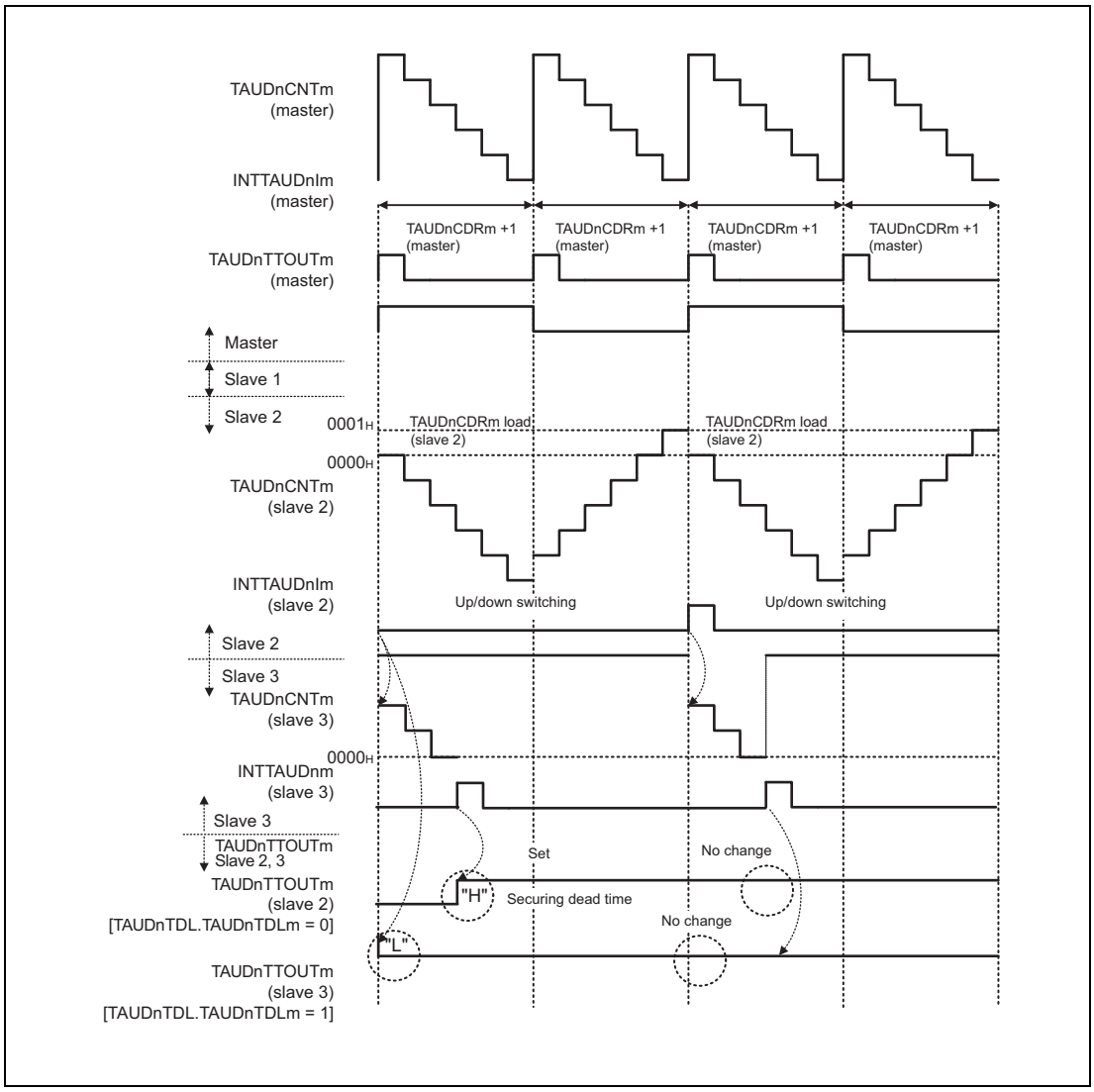

Figure 23.112 TAUDnCDRm (Slave) = 0000_H

- If TAUDnCDRm (slave 2) = 0000_H, the slave channel counter does not reach 0001_H while counting up. Therefore, no INTTAUDnIm occurs during count-up operation.
  - The set conditions for a channel with TAUDnTDL.TAUDnTDLm = 0 are met after elapse of dead time. TAUDnTTOUTm is left in a newly set state even if a set/reset is made because no reset conditions are satisfied on such a channel.
  - Slave channel 3 in the above diagram is set when the counter starts. However, TAUDnTTOUTm is left in an initial state on the slave channel with TAUDnTDL.TAUDnTDLm = 1 because no reset conditions are satisfied on that channel.

23.13.8 A/D Conversion Trigger Output Function Type 2

23.13.8.1 Overview

Summary

This function is identical to **Section 23.13.6, Triangle PWM Output Function**, except that TAUDnTTOUTm is not output.

This function is enabled by setting channel output mode for the slave to independent channel output mode controlled by software.

23.13.8.2 Block Diagram and General Timing Diagram

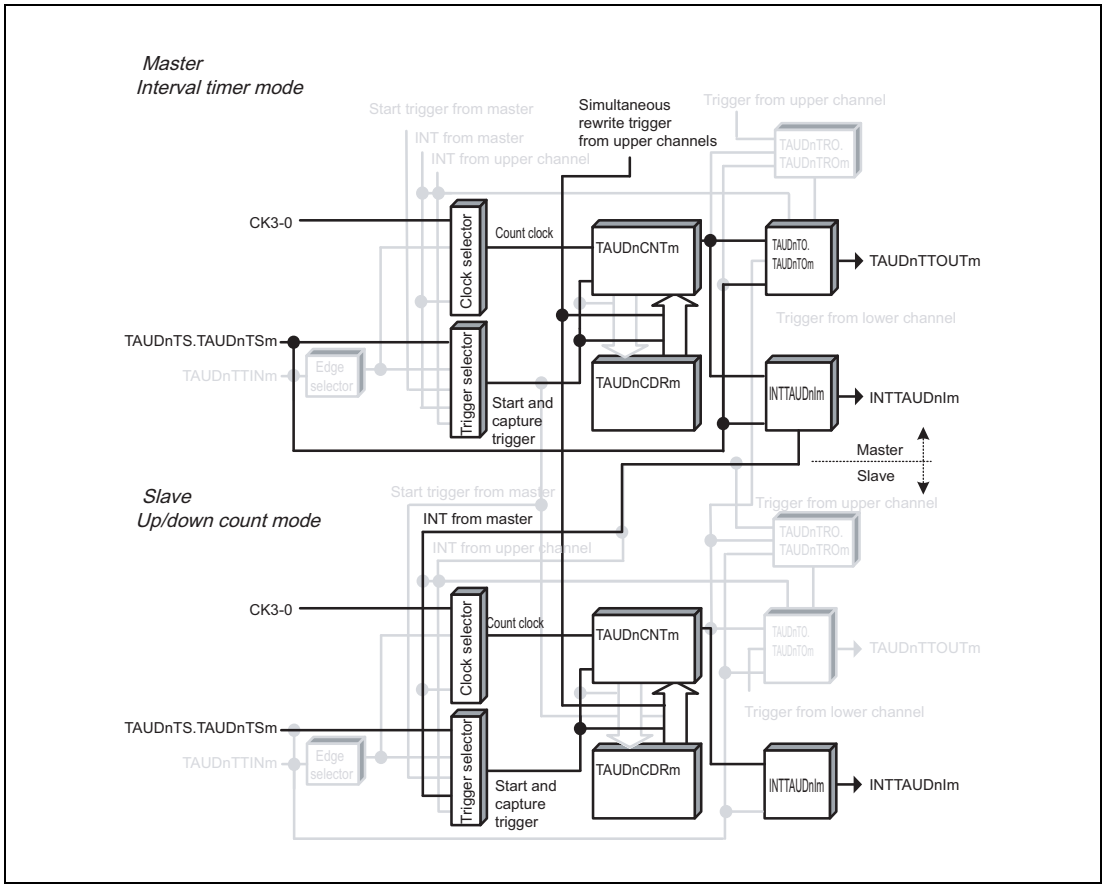

Figure 23.113 Block Diagram of A/D Conversion Trigger Output Function Type 2

The following settings apply to the general timing diagram.

- Master channel
  - INTTAUDnIm generated at the beginning of operation. (TAUDnCMORm.TAUDnMD0 = 1)

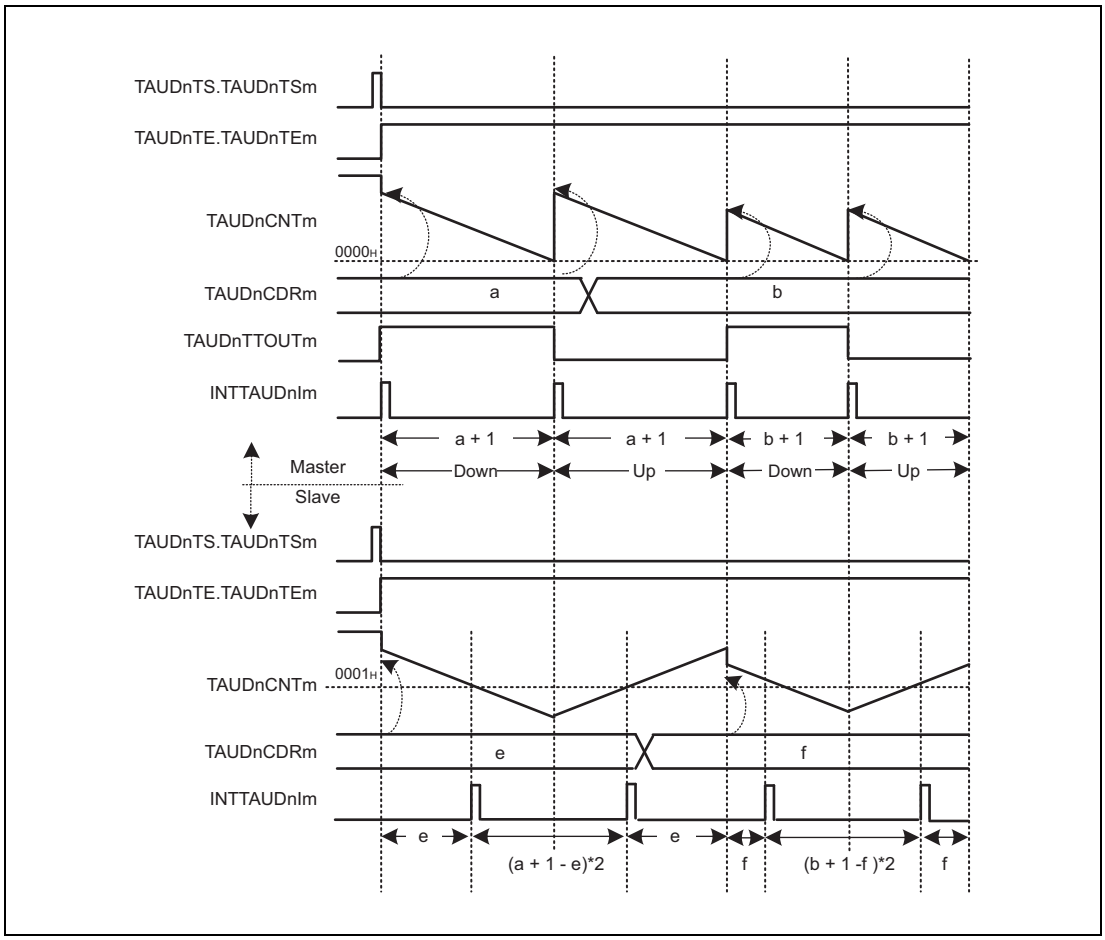

Figure 23.114 General Timing Diagram of A/D Conversion Trigger Output Function Type 2

23.13.9 Interrupt Request Signals Culling Function

23.13.9.1 Overview

Summary

This function divides the number of interrupts of the master channel by a specified value using a slave channel.

The interrupt request signals culling function is a sub function of the following functions:

- PWM Output Function (See **Section 23.13.1, PWM Output Function**)
- Triangle PWM Output Function (See **Section 23.13.6, Triangle PWM Output Function**
- Triangle PWM Output Function with Dead Time
  (See **Section 23.13.7, Triangle PWM Output Function with Dead Time**)

Prerequisites

- Two channels
- The operation mode of the master channel must be set to interval timer mode. (See **Table 23.184, Contents of the TAUDnCMORm register for the Master Channel of the Interrupt Request Signals Culling Function**)
- The operation mode of the slave channel must be set to Event Count Mode. (See **Table 23.187, Contents of the TAUDnCMORm register for the Slave Channel of the Interrupt Request Signals Culling Function**)
- TAUDnTTOUTm is not used for the master or slave channel of this function

Functional description

The counters (master and slave) are started by setting the channel trigger bit (TAUDnTS.TAUDnTSm) to 1 for both channels. This in turn sets TAUDnTE.TAUDnTEm, enabling count operation. The current value of the data register of the master channel and slave channel (TAUDnCDRm) are written to the counter (TAUDnCNTm).

- Master channel:
  When the counter of the master channel reaches 0000_H, INTTAUDnIm is generated and TAUDnCDRm value is reloaded to TAUDnCNTm.
- Slave channel:
  Every time the master channel generates an INTTAUDnIm, the counter of the slave channel reduces by one. When the counter reaches 0000_H, it awaits the next interrupt from the master channel. This causes TAUDnCNTm (slave) to reload the value of TAUDnCDRm, and an INTTAUDnIm is generated.

Forced restart is not possible for this function. The counter can be stopped by setting TAUDnTT.TAUDnTTm to 1 for the master and slave channel, which in turn sets TAUDnTE.TAUDnTEm to 0. TAUDnCNTm of master and slave channel stop but retain their values.

Conditions

This function enables simultaneous rewrite. See **Section 23.6, Simultaneous Rewrite**.

23.13.9.2 Equations

Interrupt division operator = TAUDnCDRm (slave channel)

– One INTTAUDnIm is generated for the INTTAUDnIm count of the master channel defined by TAUDnCDRm (slave channel) + 1.

23.13.9.3 Block Diagram and General Timing Diagram

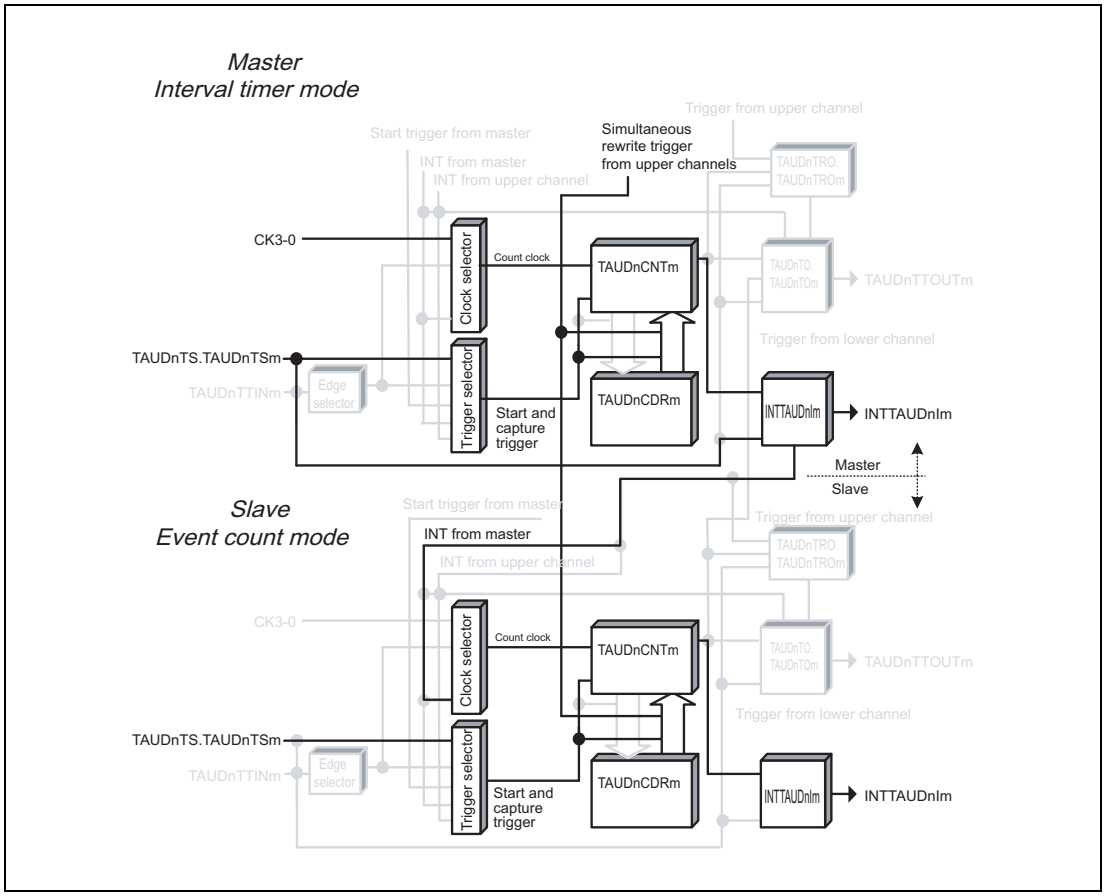

Figure 23.115 Block Diagram of Interrupt Request Signals Culling Function

The following settings apply to the general timing diagram.

Master channel:

- INTTAUDnIm generated at the beginning of operation. (TAUDnCMORm.TAUDnMD0 = 1)

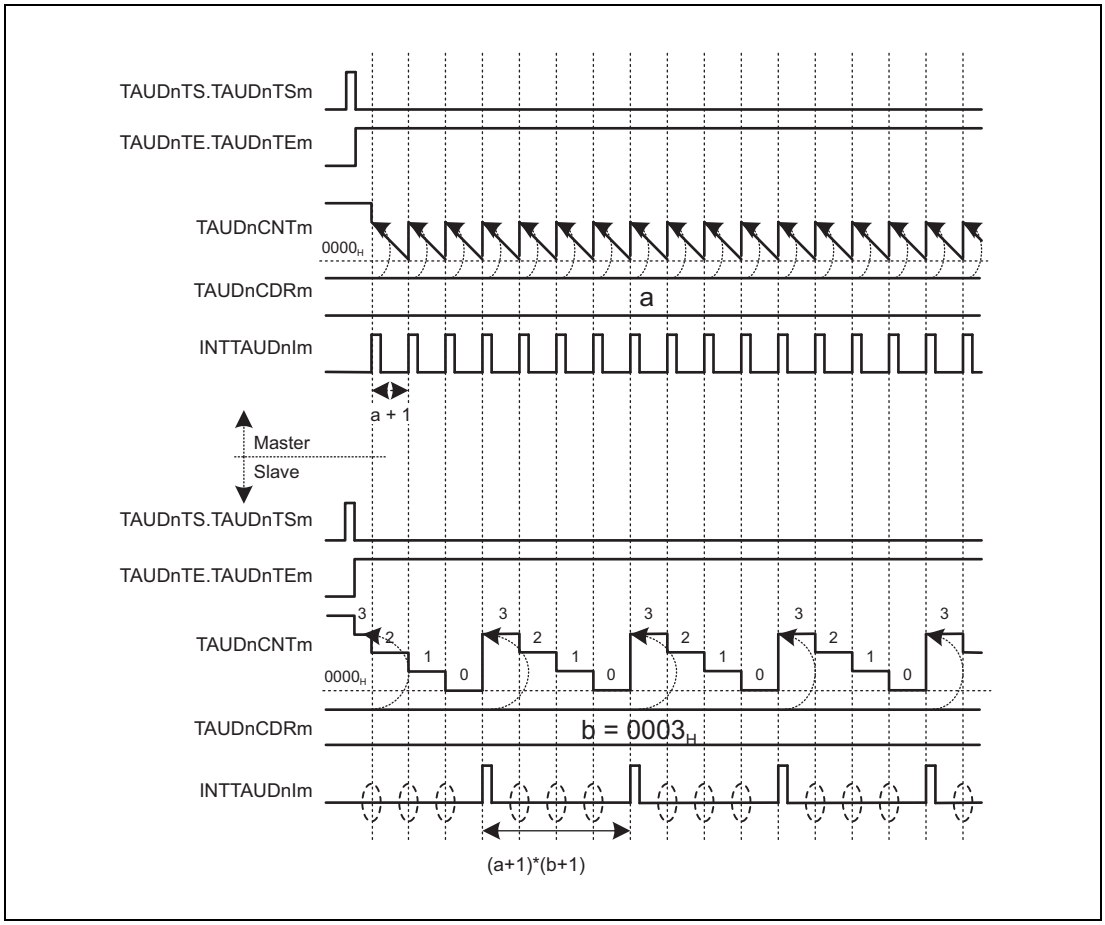

Figure 23.116 General Timing Diagram of Interrupt Request Signals Culling Function

23.13.9.4 Register Settings for the Master Channel

(1) TAUDnCMORm for the master channels

Bit	15	14	13	12	11	10	9	8	7	6	5	4	3	2	1	0
	TAUDnCKS[1:0]		TAUDnCCS[1:0]		TAUDn MAS	TAUDnSTS[2:0]			TAUDnCOS[1:0]		—	TAUDnMD[4:1]				TAUDn MD0
Value after reset	0	0	0	0	0	0	0	0	0	0	0	0	0	0	0	0
R/W	R/W	R/W	R/W	R/W	R/W	R/W	R/W	R/W	R/W	R/W	R	R/W	R/W	R/W	R/W	R/W

Table 23.184 Contents of the TAUDnCMORm register for the Master Channel of the Interrupt Request Signals Culling Function

Bit Position	Bit Name	Function
15, 14	TAUDnCKS[1:0]	Operating Clock Selection 00: Prescaler output CK0 01: Prescaler output CK1 10: Prescaler output CK2 11: Prescaler output CK3 The value of the TAUDnCKS[1:0] bit of the master and slave channels must be identical.
13, 12	TAUDnCCS[1:0]	00: Uses an operating clock as a count clock
11	TAUDnMAS	1: Channel is master channel
10 to 8	TAUDnSTS[2:0]	000: Trigger the counter using software.
7, 6	TAUDnCOS[1:0]	00: Unused. Set to 00.
5	Reserved	When read, the value after reset is read. When writing, write the value after reset.
4 to 1	TAUDnMD[4:1]	0000: Interval timer mode
0	TAUDnMD0	0: INTTAUDnIm not generated at the beginning of operation. 1: INTTAUDnIm generated at the beginning of operation.

(2) TAUDnCMURm for master channels

Bit	7	6	5	4	3	2	1	0
	—	—	—	—	—	—	TAUDnTIS[1:0]	
Value after reset	0	0	0	0	0	0	0	0
R/W	R	R	R	R	R	R	R/W	R/W

Table 23.185 Contents of the TAUDnCMURm register for the Master Channel of the Interrupt Request Signals Culling Function

Bit Position	Bit Name	Function
7 to 2	Reserved	When read, the value after reset is read. When writing, write the value after reset.
1, 0	TAUDnTIS[1:0]	00: Unused. Set to 00.

(3) Channel output mode for the master channel

TAUDnTOE.TAUDnTOEm is set to 0 because the channel output mode is not used with this function.

(4) Simultaneous rewrite for the master channel

Both master and slave channels should have the same simultaneous rewrite settings.

Table 23.186 Simultaneous Rewrite Settings for the Master channel of Interrupt Request Signals Culling Function

Bit Name	Setting
TAUDnRDE.TAUDnRDEm	1: Enables simultaneous rewrite.
TAUDnRDS.TAUDnRDSm	0: Selects master channel for simultaneous rewrite triggers. 1: Selects upper channel other than the channel group for simultaneous rewrite triggers.
TAUDnRDM.TAUDnRDMm	0: Generates a simultaneous rewrite trigger signal when the master channel starts to count. 1: A simultaneous rewrite trigger signal is generated when master channel starts to count and the corresponding slave channel is at the peak of a triangular wave.
TAUDnRDC.TAUDnRDCm	0: Does not operate as a simultaneous rewrite trigger generation channel.

23.13.9.5 Register Settings for Slave Channels

(1) TAUDnCMORm for slave channels

Bit	15	14	13	12	11	10	9	8	7	6	5	4	3	2	1	0
	TAUDnCKS[1:0]		TAUDnCCS[1:0]		TAUDn MAS	TAUDnSTS[2:0]			TAUDnCOS[1:0]		—	TAUDnMD[4:1]				TAUDn MD0
Value after reset	0	0	0	0	0	0	0	0	0	0	0	0	0	0	0	0
R/W	R/W	R/W	R/W	R/W	R/W	R/W	R/W	R/W	R/W	R/W	R	R/W	R/W	R/W	R/W	R/W

Table 23.187 Contents of the TAUDnCMORm register for the Slave Channel of the Interrupt Request Signals Culling Function

Bit Position	Bit Name	Function
15, 14	TAUDnCKS[1:0]	Operating Clock Selection 00: Prescaler output CK0 01: Prescaler output CK1 10: Prescaler output CK2 11: Prescaler output CK3 The value of the TAUDnCKS[1:0] bit of the master and slave channels must be identical.
13, 12	TAUDnCCS[1:0]	11: INTTAUDnIm of the master channel is used as the count clock
11	TAUDnMAS	0: Slave channel
10 to 8	TAUDnSTS[2:0]	000: Trigger the counter using software.
7, 6	TAUDnCOS[1:0]	00: Unused. Set to 00.
5	Reserved	When read, the value after reset is read. When writing, write the value after reset.
4 to 1	TAUDnMD[4:1]	0011: Event count mode
0	TAUDnMD0	0: INTTAUDnIm not generated at the beginning of operation.

(2) TAUDnCMURm for slave channels

Bit	7	6	5	4	3	2	1	0
	—	—	—	—	—	—	TAUDnTIS[1:0]	
Value after reset	0	0	0	0	0	0	0	0
R/W	R	R	R	R	R	R	R/W	R/W

Table 23.188 Contents of the TAUDnCMURm register for the Slave Channel of the Interrupt Request Signals Culling Function

Bit Position	Bit Name	Function
7 to 2	Reserved	When read, the value after reset is read. When writing, write the value after reset.
1, 0	TAUDnTIS[1:0]	00: Unused. Set to 00.

(3) Channel output mode for the slave channel

TAUDnTOE.TAUDnTOEm is set to 0 because the channel output mode is not used with this function.

(4) Simultaneous rewrite for slave channels

Both master and slave channels should have the same simultaneous rewrite settings.

Table 23.189 Simultaneous Rewrite Settings for Slave Channels of Interrupt Request Signals Culling Function

Bit Name	Setting
TAUDnRDE.TAUDnRDEm	1: Enables simultaneous rewrite.
TAUDnRDS.TAUDnRDSm	0: Selects master channel for simultaneous rewrite triggers. 1: Selects upper channel other than the channel group for simultaneous rewrite triggers.
TAUDnRDM.TAUDnRDMm	0: Generates a simultaneous rewrite trigger signal when the master channel starts to count. 1: A simultaneous rewrite trigger signal is generated when master channel starts to count and the corresponding slave channel is at the peak of a triangular wave.
TAUDnRDC.TAUDnRDCm	0: Does not operate as a simultaneous rewrite trigger generation channel.

23.13.9.6 Operating Procedure for Interrupt Request Signals Culling Function

Table 23.190 Operating Procedure for Interrupt Request Signals Culling Function

		Operation	TAUDn Status
	Initial Channel Setting	Master channels: Set TAUDnCMORm/ TAUDnCMURm register and the channel output mode as described in **Section 23.13.9.4, Register Settings for the Master Channel**. Slave channels: Set TAUDnCMORm/ TAUDnCMURm register and the channel output mode as described in **Section 23.13.9.5, Register Settings for Slave Channels**. Set the value of TAUDnCDRm register of every channel.	Channel operation is stopped.
Restart	Start Operation	Set TAUDnTS.TAUDnTSm of master and slave channels to 1 simultaneously. TAUDnTS.TAUDnTSm is a trigger bit, which is automatically cleared to 0.	TAUDnTE.TAUDnTEm (master and slave channels) is set to 1 and the counters of master and slave channels start. INTTAUDnIm is generated on the master channel.
	During Operation	TAUDnCDRm can be changed at any time. TAUDnCNTm and TAUDnRSF.TAUDnRSFm can be read at any time. TAUDnRDT.TAUDnRDTm can be changed during operation.	TAUDnCNTm of master channel loads TAUDnCDRm value and counts down. When the counter reaches 0000_H: • INTTAUDnIm (master) occurs. • TAUDnCNTm (master) loads TAUDnCDRm value and continues count operation. • TAUDnCNTm of slave channels counts down each time INTTAUDnIm of master channel is detected. When TAUDnCNTm of the slave = 0000_H: • INTTAUDnIm (slave) occurs. • TAUDnCNTm loads the TAUDnCDRm value and continues count operation.
	Stop Operation	Set TAUDnTT.TAUDnTTm of master and slave channels to 1 simultaneously. TAUDnTT.TAUDnTTm is a trigger bit, which is automatically cleared to 0.	TAUDnTE.TAUDnTEm is cleared to 0 and the counter stops. TAUDnCNTm stops and retain their current values.

23.13.9.7 Specific Timing Diagrams

(1) Interrupt count (master) = interrupt count (slave)

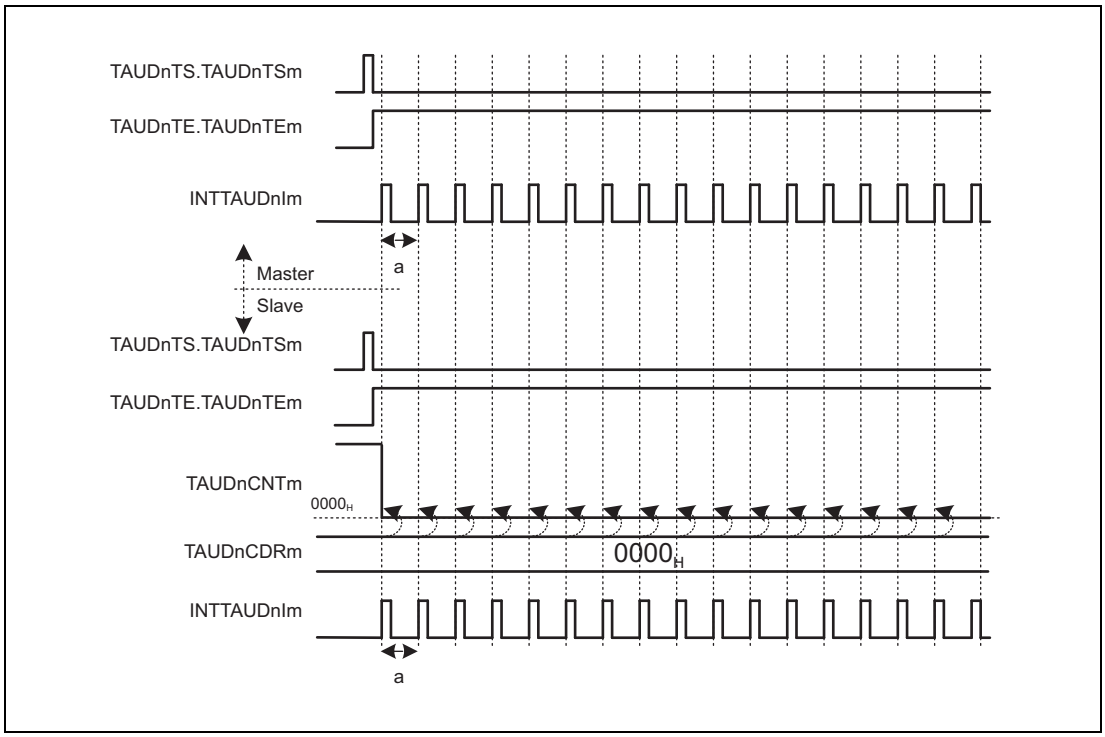

Figure 23.117 TAUDnCDRm (Slave) = 0000_H

- If TAUDnCDRm = 0000_H, TAUDnCDRm value of slave channels is loaded into TAUDnCNTm each time INTTAUDnIm of master channel is detected. In other words, TAUDnCNTm is always 0000_H.
- Therefore, an interrupt occurs on the master channel and simultaneously an interrupt occurs on slave channels.

23.14 Synchronous Non-Complementary and Complementary Modulation Output Functions

This section describes functions that generate 6-phase PWM output or triangle PWM output using a master channel and 7 slave channels.

23.14.1 Non-Complementary Modulation Output Function Type 1

23.14.1.1 Overview

Summary

This function outputs a PWM signal, a high-level signal, or a low-level signal from TAUDnTTOUTm depending on the values of the real-time output bits (TAUDnTRO.TAUDnTROm) and the modulation output enable bits (TAUDnTME.TAUDnTMEm) of a pair of slave channels. Three pairs of channels are typically used.

Prerequisites

- One master channel and seven slave channels
- The operation mode of the master channel must be set to interval timer mode. (See **Table 23.192, Contents of the TAUDnCMORm register for the Master Channel of the Non-Complementary Modulation Output Function Type 1**)
- The operating mode for slave channels 1 to 7 should be set to one-count mode. (See **Table 23.195, Contents of the TAUDnCMORm register for the Slave Channel 1 of the Non-Complementary Modulation Output Function Type 1** and **Table 23.199, Contents of the TAUDnCMURm register for the Slave Channels 2 to 7 of the Non-Complementary Output Function Type 1**.
- TAUDnTTOUTm is not used with the master channel of this function.
- TAUDnTTOUTm of slave channel 1 is not used with this function, but TAUDnTRC.TAUDnTRCm should be set to 1. (See **Section 23.7, Channel Output Modes**)
- The channel output mode for slave channels 2 to 7 should be set to synchronous channel output mode 1 with non-complementary modulation output. (See **Section 23.7, Channel Output Modes**)
- TAUDnCDRm of slave channel 1 should be set to 0000_H.

Functional description

The master/slave channel counter is enabled by setting the channel trigger bit (TAUDnTS.TAUDnTSm) to 1. This sets TAUDnTE.TAUDnTEm = 1, enabling count operation. The value of data register (TAUDnCDRm) is loaded into the counter (TAUDnCNTm) and the counter starts to count down. When the counter reaches 0000_H, INTTAUDnIm occurs.

- Slave channel 1:
  Slave channel 1 is set as a channel that triggers real-time output (TAUDnTRC.TAUDnTRCm = 1). If an interrupt occurs on slave channel 1 (TAUDnCDRm is fixed to 0000_H), the value of real-time output bit (TAUDnTRO.TAUDnTROm) of the channel that monitors the interrupt on slave channel 1 is reflected to TAUDTTOUTm respectively. After that, the counter returns to $FFFF_H$ and waits for the next interrupt of master channel.

- Slave channel 2:
  Slave channel 2 generates a PWM output. The master channel specifies a PWM output cycle and slave channel 2 specifies a duty cycle. After generating an interrupt, the counter returns to $FFFF_H$ and awaits the next interrupt from the master channel.

Slave channels 3 to 7 operate like slave channel 2.

As described in **Table 23.191, TAUDnTTOUTm Output from Slave Channels of Non-Complementary Modulation Output Function Type 1 (TAUDnTOL.TAUDnTOLm = 0)**, a signal output from TAUDnTTOUTm depends on the value of the real-time output bit (TAUDnTRO.TAUDnTROm) and modulation output bit (TAUDnTME.TAUDnTMEm) of slave channel.

This function cannot use a forced restart. The counter can be stopped by setting TAUDnTT.TAUDnTTm of master and slave channels to 1. This sets TAUDnTE.TAUDnTEm to 0. TAUDnCNTm and TAUDnTTOUTm of master and slave channels stop but retain their values. The counters can be restarted by setting TAUDnTS.TAUDnTSm to 1.

Conditions

- If TAUDnTME.TAUDnTMEm = 0 on slave channels 2 to 7 (TAUDnTOL.TAUDnTOLm = 0):
  - If the channel's TAUDnTRO.TAUDnTROm is set to 1, TAUDnTTOUTm outputs a high-level signal.
  - If the channel's TAUDnTRO.TAUDnTROm is set to 0, TAUDnTTOUTm outputs a low-level signal.
- If TAUDnTME.TAUDnTMEm = 1 on slave channels 2 to 7 (TAUDnTOL.TAUDnTOLm = 0):
  - If the channel's TAUDnTRO.TAUDnTROm is set to 1, TAUDnTTOUTm outputs PWM corresponding to the channel (positive logic).
  - If the channel's TAUDnTRO.TAUDnTROm is set to 0, TAUDnTTOUTm outputs a low-level signal.
- If TAUDnTOL.TAUDnTOLm is set to 1, high-level and low-level signals output from TAUDnTTOUTm are inverted. PWM signals become negative logic. Only the initial setting of TAUDnTOL.TAUDnTOLm is permitted (cannot be changed during operation).

Table 23.191 TAUDnTTOUTm Output from Slave Channels of Non-Complementary Modulation Output Function Type 1 (TAUDnTOL.TAUDnTOLm = 0)

TAUDnTME.TAUDnTMEm	TAUDnTRO.TAUDnTROm	TAUDnTTOUTm Output
0	0	Low level
	1	High level
1	0	Low level
	1	PWM (positive logic)

- This function enables simultaneous rewrite. See **Section 23.6, Simultaneous Rewrite**.
- TAUDnCDRm value of slave channel 1 should be set to 0000_H so that a real-time output is triggered at the same time with PWM generation on slave channels 2 to 7.
- If TAUDnTOL.TAUDnTOLm is set to 0 on slave channels 2 to 7, TAUDnTO.TAUDnTOm is set to 0 (low level) before TAUDnTE.TAUDnTEm is set to 0.
- If TAUDnTOL.TAUDnTOLm is set to 1 on slave channels 2 to 7, TAUDnTO.TAUDnTOm is set to 1 (high level) high before TAUDnTE.TAUDnTEm is set to 0.

23.14.1.2 Equations

Slave channels 2 to 7:

Pulse cycle = [TAUDnCDRm (master) + 1] × count clock cycle

Duty time = [TAUDnCDRm (slave)] × count clock cycle

23.14.1.3 Block Diagram and General Timing Diagram

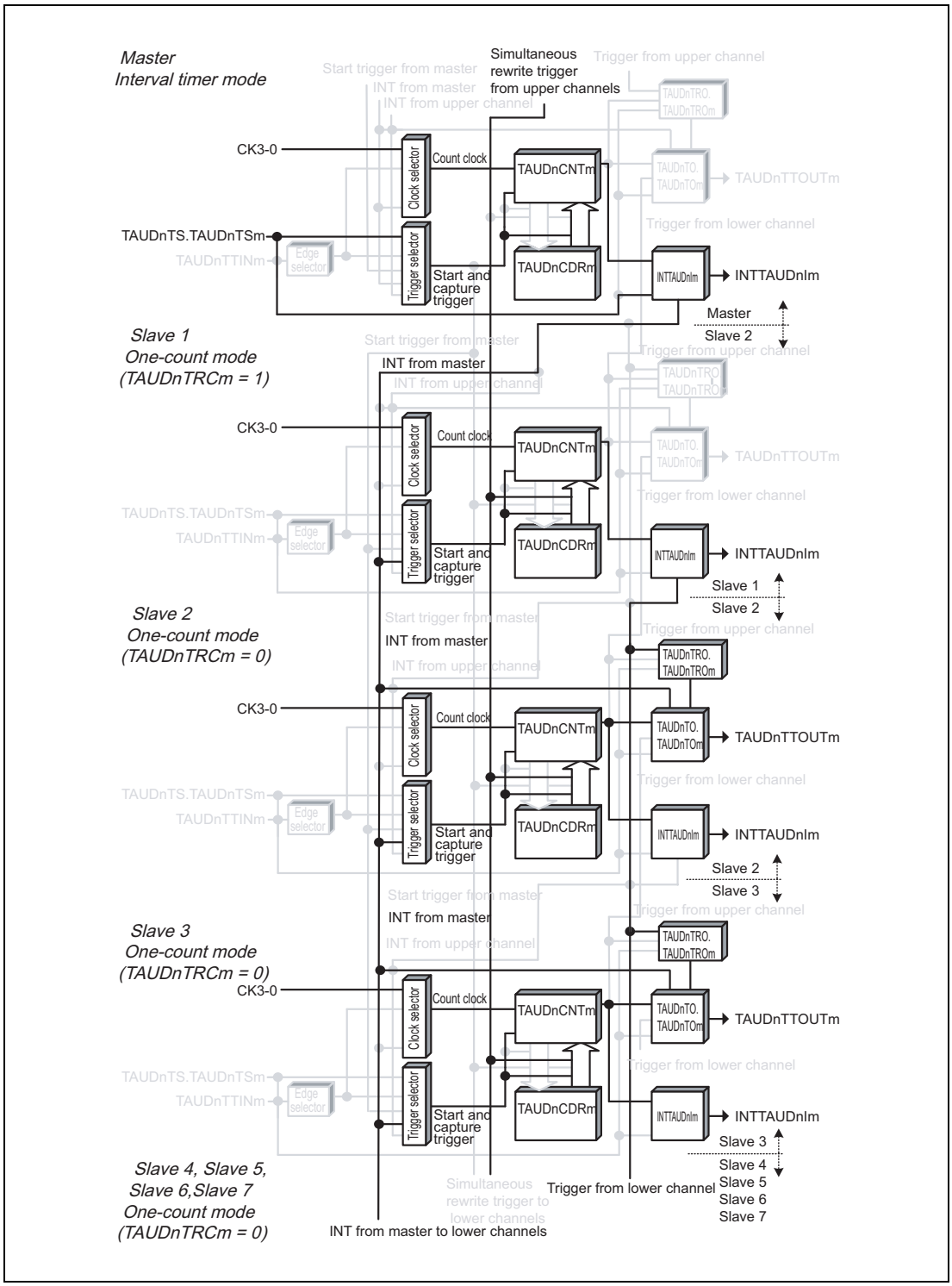

Figure 23.118 Block Diagram of Non-Complementary Modulation Output Function Type 1

The following settings apply to the general timing diagram.

- Slave channels 2 to 7: Positive logic (TAUDnTOL.TAUDnTOLm = 0)

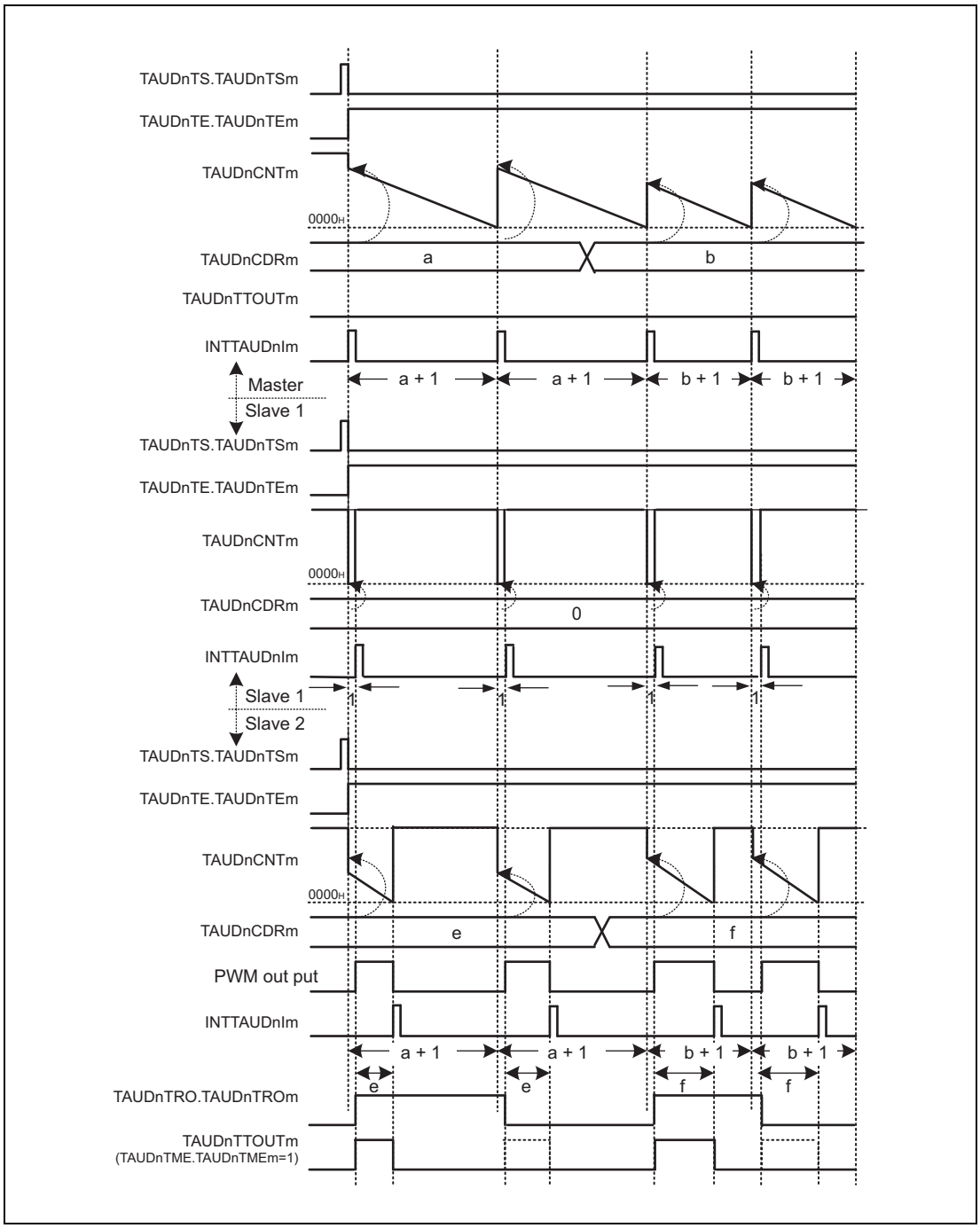

Figure 23.119 General Timing Diagram of Non-Complementary Modulation Output Function Type 1

23.14.1.4 Register Settings for Master Channels

(1) TAUDnCMORm for master channels

Bit	15	14	13	12	11	10	9	8	7	6	5	4	3	2	1	0
	TAUDnCKS[1:0]		TAUDnCCS[1:0]		TAUDn MAS	TAUDnSTS[2:0]			TAUDnCOS[1:0]		—	TAUDnMD[4:1]				TAUDn MD0
Value after reset	0	0	0	0	0	0	0	0	0	0	0	0	0	0	0	0
R/W	R/W	R/W	R/W	R/W	R/W	R/W	R/W	R/W	R/W	R/W	R	R/W	R/W	R/W	R/W	R/W

Table 23.192 Contents of the TAUDnCMORm register for the Master Channel of the Non-Complementary Modulation Output Function Type 1

Bit Position	Bit Name	Function
15, 14	TAUDnCKS[1:0]	Operating Clock Selection 00: Prescaler output CK0 01: Prescaler output CK1 10: Prescaler output CK2 11: Prescaler output CK3 The value of the TAUDnCKS[1:0] bit of the master and slave channels must be identical.
13, 12	TAUDnCCS[1:0]	00: Uses an operating clock as a count clock
11	TAUDnMAS	1: Channel is master channel
10 to 8	TAUDnSTS[2:0]	000: Trigger the counter using software.
7, 6	TAUDnCOS[1:0]	00: Unused. Set to 00.
5	Reserved	When read, the value after reset is read. When writing, write the value after reset.
4 to 1	TAUDnMD[4:1]	0000: Interval timer mode
0	TAUDnMD0	1: INTTAUDnIm is generated at the beginning of operation or at a restart time.

(2) TAUDnCMURm for master channels

Bit	7	6	5	4	3	2	1	0
	—	—	—	—	—	—	TAUDnTIS[1:0]	
Value after reset	0	0	0	0	0	0	0	0
R/W	R	R	R	R	R	R	R/W	R/W

Table 23.193 Contents of the TAUDnCMURm register for the Master Channel of the Non-Complementary Modulation Output Function Type 1

Bit Position	Bit Name	Function
7 to 2	Reserved	When read, the value after reset is read. When writing, write the value after reset.
1, 0	TAUDnTIS[1:0]	00: Unused. Set to 00.

(3) Channel output mode for master channels

TAUDnTOE.TAUDnTOEm is set to 0 because channel output mode is not used with this function.

(4) Simultaneous rewrite for master channels

Both master and slave channels should have the same simultaneous rewrite settings.

Table 23.194 Simultaneous Rewrite Settings for Master Channels of Non-Complementary Modulation Output Function Type 1

Bit Name	Setting
TAUDnRDE.TAUDnRDEm	1: Enables simultaneous rewrite.
TAUDnRDS.TAUDnRDSm	0: Monitors master channel for simultaneous rewrite triggers. 1: Monitors upper channel other than the channel group for simultaneous rewrite triggers.
TAUDnRDM.TAUDnRDMm	0: Generates a simultaneous rewrite trigger signal when the master channel starts to count.
TAUDnRDC.TAUDnRDCm	0: Does not operate as a simultaneous rewrite trigger generation channel. When TAUDnRDS.TAUDnRDSm = 0, the master channel is monitored for simultaneous rewrite triggers regardless of the value of this bit.

NOTE

When the TAUDnRDS.TAUDnRDSm bit is 1, operation of a channel with a higher number than the master channel of the type described in Section 23.12.16, Simultaneous Rewrite Trigger Generation Function Type 1, is required. Also make the settings for operation described below.

- Setting the channel for simultaneous rewrite trigger output function type 1: TAUDnRDCm = 1, TAUDnRDSm = 1
  The TAUDnCDRm setting for the given channel is derived from the formula below.
  = (TAUDnCDRm setting value of master channel for simultaneous rewrite +1) × interrupt count – 1
- Master channel: TAUDnRDCm = 0, TAUDnRDSm = 1
- Slave channel: TAUDnRDCm = 0, TAUDnRDSm = 1

23.14.1.5 Register Settings for Slave Channel 1

(1) TAUDnCMORm for slave channel 1

Bit	15	14	13	12	11	10	9	8	7	6	5	4	3	2	1	0
	TAUDnCKS[1:0]		TAUDnCCS[1:0]		TAUDn MAS	TAUDnSTS[2:0]			TAUDnCOS[1:0]		—	TAUDnMD[4:1]				TAUDn MD0
Value after reset	0	0	0	0	0	0	0	0	0	0	0	0	0	0	0	0
R/W	R/W	R/W	R/W	R/W	R/W	R/W	R/W	R/W	R/W	R/W	R	R/W	R/W	R/W	R/W	R/W

Table 23.195 Contents of the TAUDnCMORm register for the Slave Channel 1 of the Non-Complementary Modulation Output Function Type 1

Bit Position	Bit Name	Function
15, 14	TAUDnCKS[1:0]	Operating Clock Selection 00: Prescaler output CK0 01: Prescaler output CK1 10: Prescaler output CK2 11: Prescaler output CK3 The value of the TAUDnCKS[1:0] bit of the master and slave channels must be identical.
13, 12	TAUDnCCS[1:0]	00: Uses an operating clock as a count clock
11	TAUDnMAS	0: Slave channel
10 to 8	TAUDnSTS[2:0]	100: INTTAUDnIm of master channel is a start trigger.
7, 6	TAUDnCOS[1:0]	00: Unused. Set to 00.
5	Reserved	When read, the value after reset is read. When writing, write the value after reset.
4 to 1	TAUDnMD[4:1]	0100: One-count mode
0	TAUDnMD0	1: Enables the start trigger during operation

(2) TAUDnCMURm for slave channel 1

Bit	7	6	5	4	3	2	1	0
	—	—	—	—	—	—	TAUDnTIS[1:0]	
Value after reset	0	0	0	0	0	0	0	0
R/W	R	R	R	R	R	R	R/W	R/W

Table 23.196 Contents of the TAUDnCMURm register for the Slave Channel 1 of the Non-Complementary Modulation Output Function Type 1

Bit Position	Bit Name	Function
7 to 2	Reserved	When read, the value after reset is read. When writing, write the value after reset.
1, 0	TAUDnTIS[1:0]	00: Unused. Set to 00.

(3) Channel output mode

TAUDnTOE.TAUDnTOEm is set to 0 because the channel output mode is not used on slave channel 1 with this function. However, this mode can be used in independent channel output mode controlled by software.

CAUTION

TAUDnTRC.TAUDnTRCm should be set to 1 because slave channel 1 is used as a real-time output trigger channel.

(4) Simultaneous rewrite for slave channel 1

Both master and slave channels should have the same simultaneous rewrite settings.

Table 23.197 Simultaneous Rewrite Settings for Slave Channel 1 of Non-Complementary Modulation Output Function Type 1

Bit Name	Setting
TAUDnRDE.TAUDnRDEm	1: Enables simultaneous rewrite.
TAUDnRDS.TAUDnRDSm	0: Monitors master channel for simultaneous rewrite triggers. 1: Monitors upper channel other than the channel group for simultaneous rewrite triggers.
TAUDnRDM.TAUDnRDMm	0: Generates a simultaneous rewrite trigger signal when the master channel starts to count.
TAUDnRDC.TAUDnRDCm	0: Does not operate as a simultaneous rewrite trigger generation channel. When TAUDnRDS.TAUDnRDSm = 0, the master channel is monitored for simultaneous rewrite triggers regardless of the value of this bit.

23.14.1.6 Register Settings for Slave Channels 2 to 7

(1) TAUDnCMORm for slave channels 2 to 7

Bit	15	14	13	12	11	10	9	8	7	6	5	4	3	2	1	0
	TAUDnCKS[1:0]		TAUDnCCS[1:0]		TAUDn MAS	TAUDnSTS[2:0]			TAUDnCOS[1:0]		—	TAUDnMD[4:1]				TAUDn MD0
Value after reset	0	0	0	0	0	0	0	0	0	0	0	0	0	0	0	0
R/W	R/W	R/W	R/W	R/W	R/W	R/W	R/W	R/W	R/W	R/W	R	R/W	R/W	R/W	R/W	R/W

Table 23.198 Contents of the TAUDnCMORm register for the Slave Channels 2 to 7 of the Non-Complementary Modulation Output Function Type 1

Bit Position	Bit Name	Function
15, 14	TAUDnCKS[1:0]	Operating Clock Selection 00: Prescaler output CK0 01: Prescaler output CK1 10: Prescaler output CK2 11: Prescaler output CK3 The value of the TAUDnCKS[1:0] bit of the master and slave channels must be identical.
13, 12	TAUDnCCS[1:0]	00: Uses an operating clock as a count clock
11	TAUDnMAS	0: Slave channel
10 to 8	TAUDnSTS[2:0]	100: INTTAUDnIm of master channel is a start trigger.
7, 6	TAUDnCOS[1:0]	00: Unused. Set to 00.
5	Reserved	When read, the value after reset is read. When writing, write the value after reset.
4 to 1	TAUDnMD[4:1]	0100: One-count mode
0	TAUDnMD0	1: Enables the start trigger during operation

(2) TAUDnCMURm for slave channels 2 to 7

Bit	7	6	5	4	3	2	1	0
	—	—	—	—	—	—	TAUDnTIS[1:0]	
Value after reset	0	0	0	0	0	0	0	0
R/W	R	R	R	R	R	R	R/W	R/W

Table 23.199 Contents of the TAUDnCMURm register for the Slave Channels 2 to 7 of the Non-Complementary Output Function Type 1

Bit Position	Bit Name	Function
7 to 2	Reserved	When read, the value after reset is read. When writing, write the value after reset.
1, 0	TAUDnTIS[1:0]	00: Unused. Set to 00.

(3) Channel output mode for slave channels 2 to 7

Table 23.200 Control Bit Settings in Synchronous Channel Output Mode 1 with Non-ComplemEntary Modulation Output

Bit Name	Setting
TAUDnTOE.TAUDnTOEm	1: Enables independent channel output mode
TAUDnTOM.TAUDnTOMm	1: Synchronous channel output
TAUDnTOC.TAUDnTOCm	0: Operating mode 1
TAUDnTOL.TAUDnTOLm	0: Positive logic 1: Negative logic
TAUDnTDE.TAUDnTDEm	0: Disables dead time operation
TAUDnTDM.TAUDnTDMm	0: When dead time operation is disabled (TAUDnTDE.TAUDnTDEm = 0), set these bits to 0
TAUDnTDL.TAUDnTDLm	
TAUDnTRE.TAUDnTREm	1: Enables real-time output.
TAUDnTRO.TAUDnTROm	0: Real-time output is low. 1: Real-time output is high.
TAUDnTRC.TAUDnTRCm	0: Upper channel generates a real-time output trigger for channel m.
TAUDnTME.TAUDnTMEm	0: Disables modulation 1: Enables modulation

(4) Simultaneous rewrite of slave channels 2 to 7

Both master and slave channels should have the same simultaneous rewrite settings.

Table 23.201 Simultaneous Rewrite Settings for Slave Channels 2 to 7 of Non-Complementary Modulation Output Function Type 1

Bit Name	Setting
TAUDnRDE.TAUDnRDEm	1: Enables simultaneous rewrite.
TAUDnRDS.TAUDnRDSm	0: Monitors master channel for simultaneous rewrite triggers. 1: Monitors upper channel other than the channel group for simultaneous rewrite triggers.
TAUDnRDM.TAUDnRDMm	0: Generates a simultaneous rewrite trigger signal when the master channel starts to count.
TAUDnRDC.TAUDnRDCm	0: Does not operate as a simultaneous rewrite trigger generation channel. When TAUDnRDS.TAUDnRDSm = 0, the master channel is monitored for simultaneous rewrite triggers regardless of the value of this bit.

23.14.1.7 Operating Procedure for Non-Complementary Modulation Output Function Type 1

Table 23.202 Operating Procedure for Non-Complementary Modulation Output Function Type 1 (1/2)

	Operation	TAUDn Status
Initial Channel Setting	Master channels: Set TAUDnCMORm/ TAUDnCMURm register and the channel output mode as described in **Section 23.14.1.4, Register Settings for Master Channels**. Slave channel 1: Set TAUDnCMORm/ TAUDnCMURm register and the channel output mode as described in **Section 23.14.1.5, Register Settings for Slave Channel 1**. Slave channels 2 to 7: Set TAUDnCMORm/ TAUDnCMURm register and the channel output mode as described in **Section 23.14.1.6, Register Settings for Slave Channels 2 to 7**. Set the value of TAUDnCDRm register of every channel. Set a pulse cycle with TAUDnCDRm of master channel, 0000_H in TAUDnCDRm of slave channel 1, and duty width with TAUDnCDRm of slave channels 2 to 7. Set TAUDnTRC.TAUDnTRCm to 1 on slave channel 1.	Channel operation is stopped.

Table 23.202 Operating Procedure for Non-Complementary Modulation Output Function Type 1 (2/2)

		Operation	TAUDn Status
Restart	Start Operation	Set TAUDnTS.TAUDnTSm of master and slave channels to 1 simultaneously. TAUDnTS.TAUDnTSm is a trigger bit, which is automatically cleared to 0.	TAUDnTE.TAUDnTEm of master and slave channels is set to 1 and the counter starts counting down.
	During Operation	TAUDnCDRm, TAUDnTRO.TAUDnTROm, and TAUDnTMEm.TAUDnTMEm can be changed at any time. TAUDnCNTm and TAUDnRSF.TAUDnRSFm can be read at any time. TAUDnRDT.TAUDnRDTm can be changed during operation.	TAUDnCDRm value of master channel, slave channel 1 and slave channels 2 to 7 is loaded into TAUDnCNTm to perform counting down. When the counter of master channel reaches 0000_H: • INTTAUDnIm is generated. • TAUDnCDRm value of master channel is reloaded into TAUDnCNTm to continue counting down. • PWM output signals of slave channels 2 to 7 are set/reset. • TAUDnCDRm value of slave channel 1 is reloaded into TAUDnCNTm to perform counting down. • TAUDnCDRm value of slave channels 2 to 7 is reloaded into TAUDnCNTm to perform counting down. • When the counter of slave channel 1 reaches 0000_H: – INTTAUDnIm is generated. – TAUDnTRO.TAUDnTROm value of slave channel 2 to 7 is reflected to the TAUDTTOUTm output. • When the counter of slave channels 2 to 7 reaches 0000_H: – INTTAUDnIm is generated. – PWM output signals of slave channels 2 to 7 are set. TAUDnTTOUTm of slave channels 2 to 7 outputs a PWM signal, a high-level signal or low-level signal depending on the values of real-time output bits (TAUDnTRO.TAUDnTROm) and modulation output bit (TAUDnTME.TAUDnTMEm) of a pair of slave channels.
	Stop Operation	Set TAUDnTT.TAUDnTTm of master and slave channels to 1 simultaneously. TAUDnTT.TAUDnTTm is a trigger bit, which is automatically cleared to 0.	TAUDnTE.TAUDnTEm is cleared to 0 and the counter stops. TAUDnCNTm and TAUDnTTOUTm stop and retain their current values.

23.14.1.8 Specific Timing Diagrams

The following settings apply to the specific timing diagram.

- Slave channels 2 to 7: Positive logic (TAUDnTOL.TAUDnTOLm = 0)

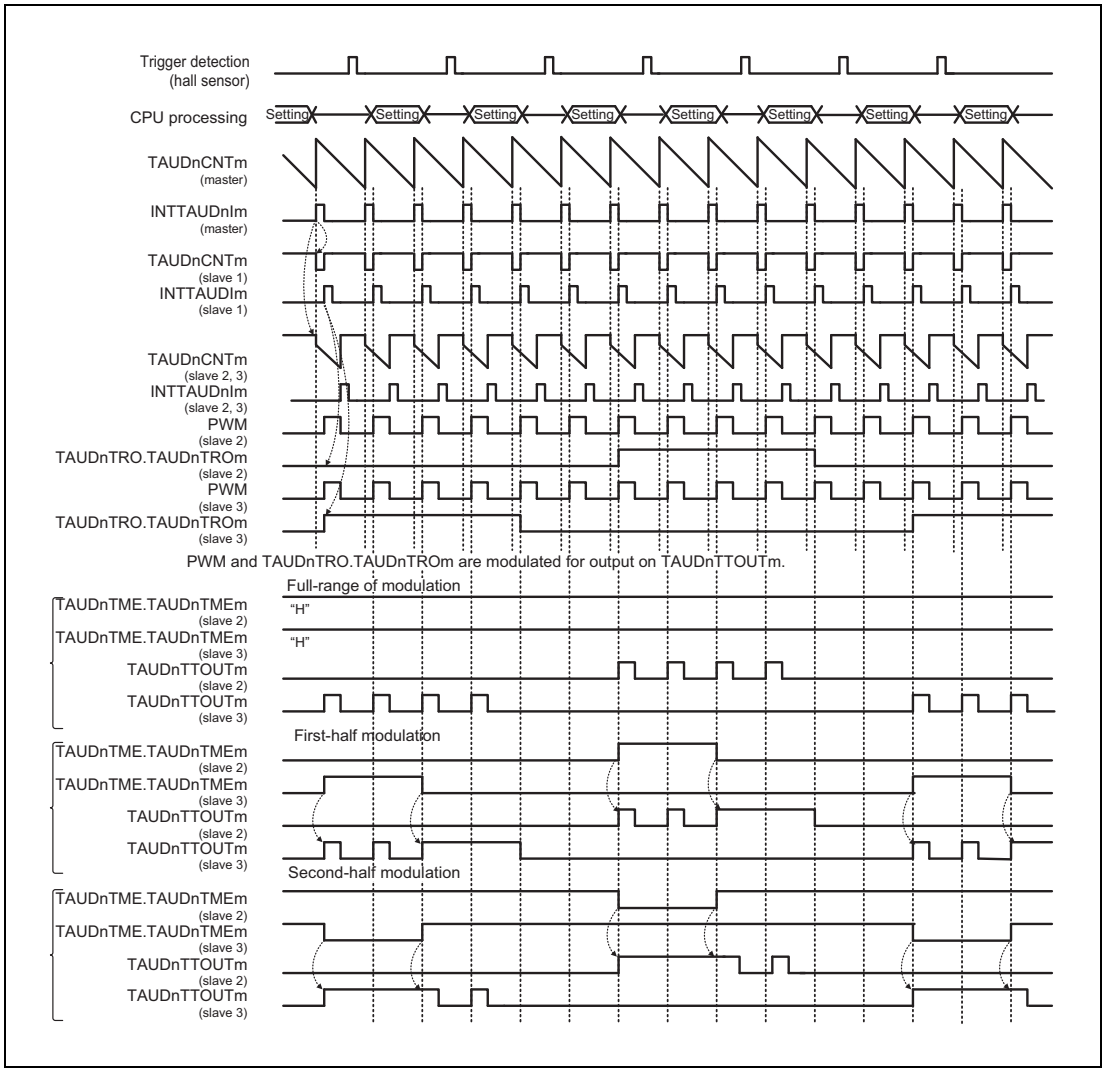

Figure 23.120 Specific Timing Diagram of Non-Complementary Modulation Output Function Type 1

The above timing diagram shows how full modulation, first-half modulation, and second-half modulation can be achieved by modifying the TAUDnTME.TAUDnTMEm bits of lower slave channels during operation.

The "Setting" symbol indicates a time period when the values of TAUDnCDRm, TAUDnTME.TAUDnTMEm, and TAUDnTRO.TAUDnTROm can be changed.

TAUDnTME.TAUDnTMEm setting is reflected by detecting the count start timing and master channel cycle. According to the modified setting, modulation waveforms are output from TAUDnTTOUTm.

TAUDnTRO.TAUDnTROm bit value is set by software, but a new setting is applied only when an interrupt occurs on slave channel 1.

23.14.2 Non-Complementary Modulation Output Function Type 2

23.14.2.1 Overview

Summary

This function outputs a triangular wave PWM output signal, a high-level signal, or low-level signal from TAUDnTTOUTm depending on the real-time output bit value (TAUDnTRO.TAUDnTROm) and the modulation output enable bit value (TAUDnTME.TAUDnTMEm) of a pair of slave channels. Three pairs of channels are typically used.

Prerequisites

- One master channel and seven slave channels
- The operation mode of the master channel must be set to interval timer mode. (See **Table 23.204, Contents of the TAUDnCMORm register for the Master Channel of the Non-Complementary Modulation Output Function Type 2**)
- The operating mode for slave channel 1 should be set to event count mode. (See **Table 23.208, Contents of the TAUDnCMORm register for the Slave Channel 1 of the Non-Complementary Modulation Output Function Type 2**)
- The operating mode for slave channels 2 to 7 should be set to up/down count mode. (See **Table 23.211, Contents of the TAUDnCMORm register for the Slave Channels 2 to 7 of the Non-Complementary Modulation Output Function Type 2**)
- Output mode of master channel should be set to channel single output mode 1. (See **Section 23.7, Channel Output Modes**)
- This function does not use TAUDnTTOUTm of slave channel 1 but TAUDnTRC.TAUDnTRCm should be set to 1. (See **Section 23.7, Channel Output Modes**)
- The channel output mode for slave channels 2 to 7 should be set to synchronous channel output mode 2 with non-complementary modulation output. (See **Section 23.7, Channel Output Modes**)

Functional description

The master/slave channel counter is enabled by setting the channel trigger bit (TAUDnTS.TAUDnTSm) to 1. This sets TAUDnTE.TAUDnTEm = 1, enabling count operation. The value of data register (TAUDnCDRm) is loaded into the counter (TAUDnCNTm).

- Master channel:
  The counter of master channel starts to count down. When the counter reaches 0000_H, INTTAUDnIm occurs.
- Slave channel 1:
  When slave channel 1 detects an interrupt from the master channel, the TAUDnCNTm value is decremented by 1. When interrupt count from the master channel reaches TAUDnCDRm + 1, INTTAUDnIm is generated. Afterwards, it leads the TAUDnCDRm value to TAUDnCNTm and continues count operation.
  When the counter reaches to 0000_H, slave channel 1 waits from the next interrupt from the master channel. And the TAUDnCDRm value is reloaded into TAUDnCNTm (slave 1) and INTTAUDnIm is generated.
  Since slave channel 1 is set as a real-time output trigger channel

(TAUDnTRC.TAUDnTRCm = 1), the real-time output bit (TAUDnTRO.TAUDnTROm) of the channel which monitors an interrupt on the corresponding channel is reflected to respective TAUDTTOUTm output when an interrupt occurs on slave 1 channel.

- Slave channel 2:
  Once detecting an interrupt from the master channel, TAUDnCNTm counts in the reverse direction. When an interrupt is detected during count-up operation, TAUDnCDRm value is reloaded and then the counter starts to count down.
  If TAUDnCNTm = 0001_H, an interrupt occurs and a PWM output signal is set/reset.

The combined use of the master channel and slave channel 2 generates a PWM output signal. The master channel generates a PWM output cycle and slave channel 2 generate a duty cycle.

Slave channels 3 to 7 operates like slave channel 2.

A signal that is output from TAUDnTTOUTm depends on a real-time output bit value (TAUDnTRO.TAUDnTROm) and a modulation output bit value (TAUDnTME.TAUDnTMEm) of the slave channel, as described in **Table 23.203, TAUDnTTOUTm Output of Slave Channels in Non-Complementary Modulation Output Function Type 2 (TAUDnTOL.TAUDnTOLm = 0)**.

This function cannot make a forced restart. The counter can be stopped by setting TAUDnTT.TAUDnTTm of master and slave channels to 1. This sets TAUDnTE.TAUDnTEm to 0. TAUDnCNTm and TAUDnTTOUTm of master and slave channels stop but retain their values. The counters can be restarted by setting TAUDnTS.TAUDnTSm to 1.

Conditions

- If TAUDnTME.TAUDnTMEm = 0 on slave channels 2 to 7 (TAUDnTOL.TAUDnTOLm = 0):
  - If the channel's TAUDnTRO.TAUDnTROm is set to 1, TAUDnTTOUTm outputs PWM corresponding to the channel (positive logic).
  - If the channel's TAUDnTRO.TAUDnTROm is set to 0, TAUDnTTOUTm outputs a low-level signal.
- If TAUDnTME.TAUDnTMEm = 1 on slave channels 2 to 7 (TAUDnTOL.TAUDnTOLm = 0):
  - If the channel's TAUDnTRO.TAUDnTROm is set to 1, TAUDnTTOUTm outputs a high-level signal.
  - If the channel's TAUDnTRO.TAUDnTROm is set to 0, TAUDnTTOUTm outputs a low-level signal.
- If TAUDnTOL.TAUDnTOLm is set to 1, high-level and low-level signals output from TAUDnTTOUTm are inverted. PWM signals become negative logic. Only the initial setting of TAUDnTOL.TAUDnTOLm is permitted (cannot be changed during operation).

Table 23.203 TAUDnTTOUTm Output of Slave Channels in Non-Complementary Modulation Output Function Type 2 (TAUDnTOL.TAUDnTOLm = 0)

TAUDnTME.TAUDnTMEm	TAUDnTRO.TAUDnTROm	TAUDnTTOUTm Output
0	0	Low level
	1	High level
1	0	Low level
	1	PWM (positive logic)

- This function enables simultaneous rewrite. See **Section 23.6, Simultaneous Rewrite**.
- If TAUDnTOL.TAUDnTOLm is set to 0 on slave channels 2 to 7, TAUDnTO.TAUDnTOm is set 0 (low level) before TAUDnTE.TAUDnTEm is set to 0.
- If TAUDnTOL.TAUDnTOLm is set to 1 on slave channels 2 to 7, TAUDnTO.TAUDnTOm is set 1 (high level) before TAUDnTE.TAUDnTEm is set to 0.

23.14.2.2 Equations

Slave channels 2 to 7:

Carrier cycle (down/up)

= [TAUDnCDRm (master) + 1] × 2 × count clock cycle

Duty time

= [TAUDnCDRm (master) + 1 – TAUDnCDRm (slave)] × 2 × count clock cycle

23.14.2.3 Block Diagram and General Timing Diagram

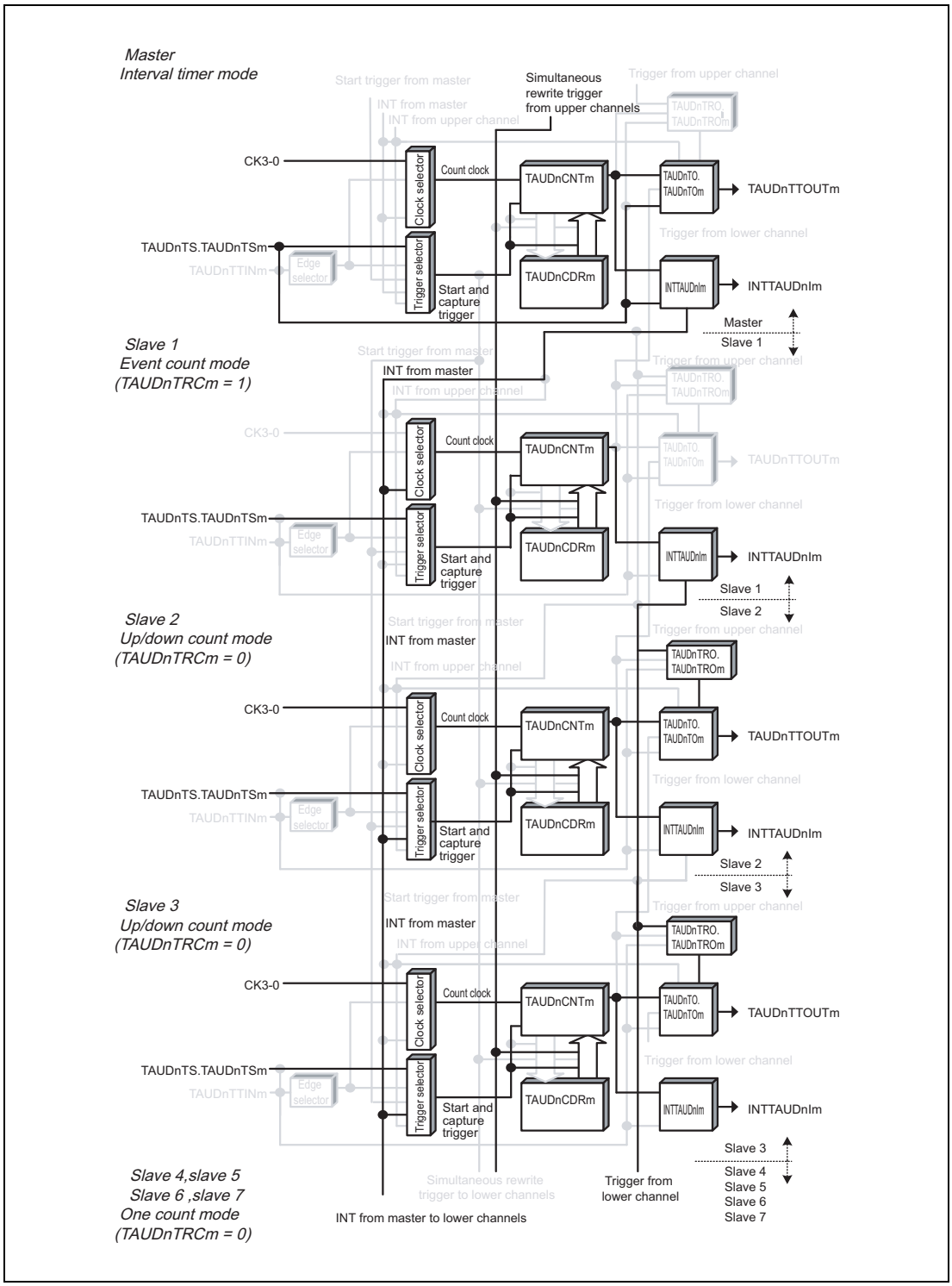

Figure 23.121 Block Diagram of Non-Complementary Modulation Output Function Type 2

The following settings apply to the general timing diagram.

- Master channel: INTTAUDnIm not generated at the beginning of operation. (TAUDnCMORm.TAUDnMD0 = 0)
- Slave channels 2 to 7: Positive logic (TAUDnTOL.TAUDnTOLm = 0)

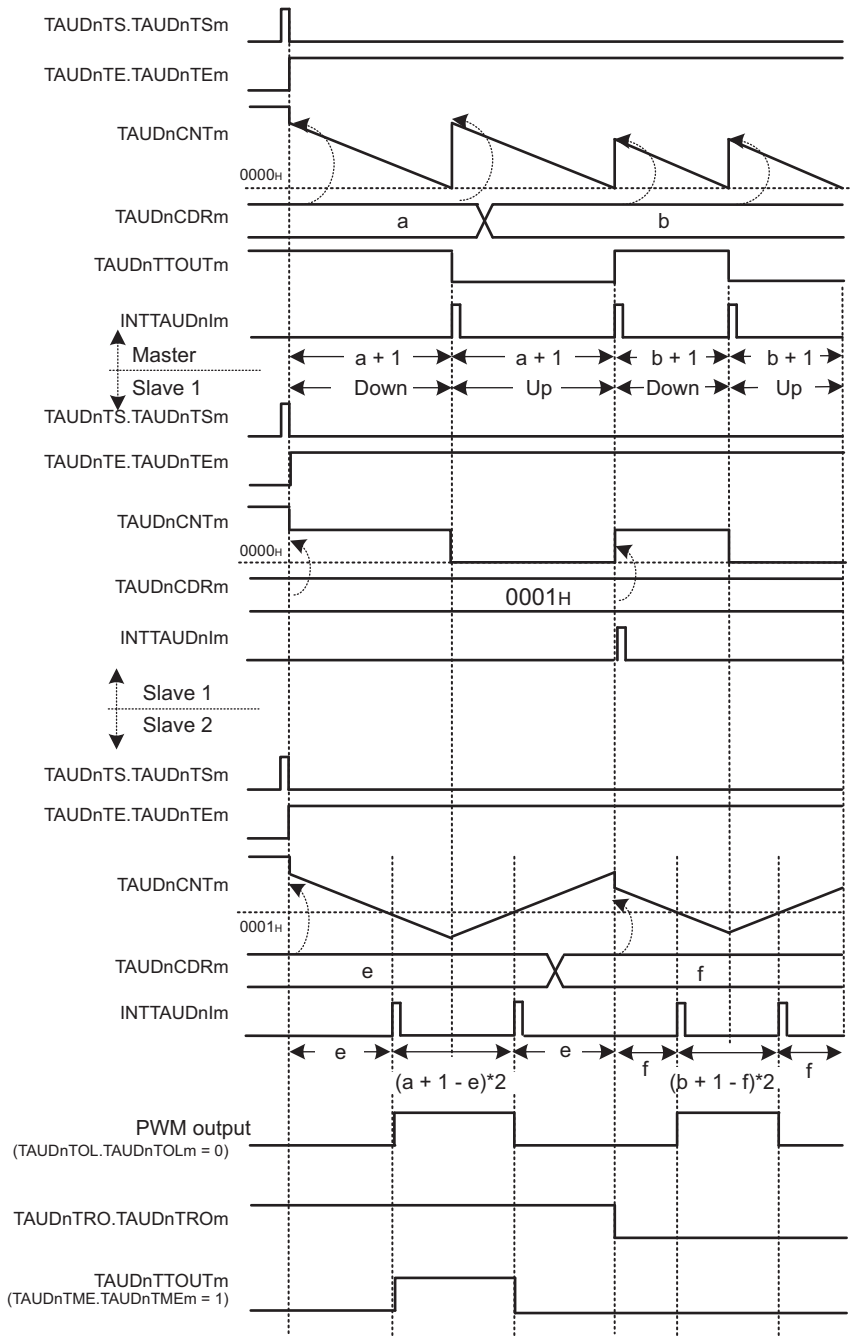

Figure 23.122 General Timing Diagram of Non-Complementary Modulation Output Function Type 2

23.14.2.4 Register Settings for Master Channels

(1) TAUDnCMORm for master channels

Bit	15	14	13	12	11	10	9	8	7	6	5	4	3	2	1	0
	TAUDnCKS[1:0]		TAUDnCCS[1:0]		TAUDn MAS	TAUDnSTS[2:0]			TAUDnCOS[1:0]		—	TAUDnMD[4:1]				TAUDn MD0
Value after reset	0	0	0	0	0	0	0	0	0	0	0	0	0	0	0	0
R/W	R/W	R/W	R/W	R/W	R/W	R/W	R/W	R/W	R/W	R/W	R	R/W	R/W	R/W	R/W	R/W

Table 23.204 Contents of the TAUDnCMORm register for the Master Channel of the Non-Complementary Modulation Output Function Type 2

Bit Position	Bit Name	Function
15, 14	TAUDnCKS[1:0]	Operating Clock Selection 00: Prescaler output CK0 01: Prescaler output CK1 10: Prescaler output CK2 11: Prescaler output CK3 The value of the TAUDnCKS[1:0] bit of the master and slave channels must be identical.
13, 12	TAUDnCCS[1:0]	00: Uses an operating clock as a count clock
11	TAUDnMAS	1: Channel is master channel
10 to 8	TAUDnSTS[2:0]	000: Trigger the counter using software.
7, 6	TAUDnCOS[1:0]	00: Unused. Set to 00.
5	Reserved	When read, the value after reset is read. When writing, write the value after reset.
4 to 1	TAUDnMD[4:1]	0000: Interval timer mode
0	TAUDnMD0	0: INTTAUDnIm is not generated at the beginning of operation or at a restart time. 1: INTTAUDnIm is generated at the beginning of operation or at a restart time.

(2) TAUDnCMURm for master channels

Bit	7	6	5	4	3	2	1	0
	—	—	—	—	—	—	TAUDnTIS[1:0]	
Value after reset	0	0	0	0	0	0	0	0
R/W	R	R	R	R	R	R	R/W	R/W

Table 23.205 Contents of the TAUDnCMURm register for the Master Channel of the Non-Complementary Modulation Output Function Type 2

Bit Position	Bit Name	Function
7 to 2	Reserved	When read, the value after reset is read. When writing, write the value after reset.
1, 0	TAUDnTIS[1:0]	00: Unused. Set to 00.

(3) Channel output mode for master channels

Table 23.206 Control Bit Settings for Master Channels in Non-Complementary Modulation Output Function Type 2

Bit Name	Setting
TAUDnTOE.TAUDnTOEm	1: Enables independent channel output mode
TAUDnTOM.TAUDnTOMm	0: Independent channel output
TAUDnTOC.TAUDnTOCm	0: Operating mode 1 (toggle mode with TAUDnTOM.TAUDnTOMm = 0)
TAUDnTOL.TAUDnTOLm	0: Setting is disabled (value after reset) in toggle mode.
TAUDnTDE.TAUDnTDEm	0: Disables dead time operation
TAUDnTDM.TAUDnTDMm	0: When dead time operation is disabled (TAUDnTDE.TAUDnTDEm = 0), set these bits to 0
TAUDnTDL.TAUDnTDLm	
TAUDnTRE.TAUDnTREm	0: Disables real-time output
TAUDnTRO.TAUDnTROm	0: Set 0 while real-time output is prohibited (TAUDnTRE.TAUDnTREm = 0).
TAUDnTRC.TAUDnTRCm	0: Set 0 while real-time output is prohibited (TAUDnTRE.TAUDnTREm = 0).
TAUDnTME.TAUDnTMEm	0: Disables modulation

(4) Simultaneous rewrite for master channels

Both master and slave channels should have the same simultaneous rewrite settings.

Table 23.207 Simultaneous Rewrite Settings for Master Channels of Non-Complementary Modulation Output Function Type 2

Bit Name	Setting
TAUDnRDE.TAUDnRDEm	1: Enables simultaneous rewrite
TAUDnRDS.TAUDnRDSm	0: Monitors master channel for simultaneous rewrite triggers. 1: Monitors upper channel other than the channel group for simultaneous rewrite triggers.
TAUDnRDM.TAUDnRDMm	1: A simultaneous rewrite trigger signal is generated when master channel starts to count and the corresponding slave channel is at the peak of a triangular wave.
TAUDnRDC.TAUDnRDCm	0: Does not operate as a simultaneous rewrite trigger generation channel. TAUDnRDSm = 0, the master channel is monitored for simultaneous rewrite triggers regardless of the value of this bit.

NOTE

If TAUDnRDS.TAUDnRDSm = 1, it is necessary for an upper channel higher than a master channel to generate a simultaneous rewrite trigger signal.

23.14.2.5 Register Settings for Slave Channel 1

(1) TAUDnCMORm for slave channel 1

Bit	15	14	13	12	11	10	9	8	7	6	5	4	3	2	1	0
	TAUDnCKS[1:0]		TAUDnCCS[1:0]		TAUDn MAS	TAUDnSTS[2:0]			TAUDnCOS[1:0]		—	TAUDnMD[4:1]				TAUDn MD0
Value after reset	0	0	0	0	0	0	0	0	0	0	0	0	0	0	0	0
R/W	R/W	R/W	R/W	R/W	R/W	R/W	R/W	R/W	R/W	R/W	R	R/W	R/W	R/W	R/W	R/W

Table 23.208 Contents of the TAUDnCMORm register for the Slave Channel 1 of the Non-Complementary Modulation Output Function Type 2

Bit Position	Bit Name	Function
15, 14	TAUDnCKS[1:0]	Operating Clock Selection 00: Prescaler output CK0 01: Prescaler output CK1 10: Prescaler output CK2 11: Prescaler output CK3 The value of the TAUDnCKS[1:0] bit of the master and slave channels must be identical.
13, 12	TAUDnCCS[1:0]	11: INTTAUDnIm of the master channel is used as the count clock
11	TAUDnMAS	0: Slave channel
10 to 8	TAUDnSTS[2:0]	000: Trigger the counter using software. 011: Triggers simultaneous rewrite.
7, 6	TAUDnCOS[1:0]	00: Unused. Set to 00.
5	Reserved	When read, the value after reset is read. When writing, write the value after reset.
4 to 1	TAUDnMD[4:1]	0011: Event count mode
0	TAUDnMD0	0: INTTAUDnIm is not generated at the beginning of operation or at a restart time.

(2) TAUDnCMURm for slave channel 1

Bit	7	6	5	4	3	2	1	0
	—	—	—	—	—	—	TAUDnTIS[1:0]	
Value after reset	0	0	0	0	0	0	0	0
R/W	R	R	R	R	R	R	R	R/W

Table 23.209 Contents of the TAUDnCMURm register for the Slave Channel 1 of the Non-Complementary Modulation Output Function Type 2

Bit Position	Bit Name	Function
7 to 2	Reserved	When read, the value after reset is read. When writing, write the value after reset.
1, 0	TAUDnTIS[1:0]	00: Unused. Set to 00.

(3) Channel output mode

TAUDnTOE.TAUDnTOEm is set to 0 because the channel output mode is not used on slave channel 1 with this function. However, this mode can be used in independent channel output mode controlled by software.

CAUTION

TAUDnTRC.TAUDnTRCm should be set to 1 because slave channel 1 is used as a real-time output trigger channel.

(4) Simultaneous rewrite for slave channel 1

Both master and slave channels should have the same simultaneous rewrite settings.

Table 23.210 Simultaneous Rewrite Settings for Slave Channel 1 of Non-Complementary Modulation Output Function Type 2

Bit Name	Setting
TAUDnRDE.TAUDnRDEm	1: Enables simultaneous rewrite.
TAUDnRDS.TAUDnRDSm	0: Monitors master channel for simultaneous rewrite triggers. 1: Monitors upper channel other than the channel group for simultaneous rewrite triggers.
TAUDnRDM.TAUDnRDMm	1: A simultaneous rewrite trigger signal is generated when master channel counter is started and the corresponding slave channel is at the peak of triangular wave.
TAUDnRDC.TAUDnRDCm	0: Does not operate as a simultaneous rewrite trigger generation channel. When TAUDnRDS.TAUDnRDSm = 0, the master channel is monitored for simultaneous rewrite triggers regardless of the value of this bit.

23.14.2.6 Register Settings for slave channels 2 to 7

(1) TAUDnCMORm for slave channels 2 to 7

Bit	15	14	13	12	11	10	9	8	7	6	5	4	3	2	1	0
	TAUDnCKS[1:0]		TAUDnCCS[1:0]		TAUDn MAS	TAUDnSTS[2:0]			TAUDnCOS[1:0]		—	TAUDnMD[4:1]				TAUDn MD0
Value after reset	0	0	0	0	0	0	0	0	0	0	0	0	0	0	0	0
R/W	R/W	R/W	R/W	R/W	R/W	R/W	R/W	R/W	R/W	R/W	R	R/W	R/W	R/W	R/W	R/W

Table 23.211 Contents of the TAUDnCMORm register for the Slave Channels 2 to 7 of the Non-Complementary Modulation Output Function Type 2

Bit Position	Bit Name	Function
15, 14	TAUDnCKS[1:0]	Operating Clock Selection 00: Prescaler output CK0 01: Prescaler output CK1 10: Prescaler output CK2 11: Prescaler output CK3 The value of the TAUDnCKS[1:0] bit of the master and slave channels must be identical.
13, 12	TAUDnCCS[1:0]	00: Uses an operating clock as a count clock
11	TAUDnMAS	0: Slave channel
10 to 8	TAUDnSTS[2:0]	111: The up/down output trigger signal of the master channel
7, 6	TAUDnCOS[1:0]	00: Unused. Set to 00.
5	Reserved	When read, the value after reset is read. When writing, write the value after reset.
4 to 1	TAUDnMD[4:1]	1001: Up/down count mode
0	TAUDnMD0	0: INTTAUDnIm is not generated at the beginning of operation or at a restart time.

(2) TAUDnCMURm for slave channels 2 to 7

Bit	7	6	5	4	3	2	1	0
	—	—	—	—	—	—	TAUDnTIS[1:0]	
Value after reset	0	0	0	0	0	0	0	0
R/W	R	R	R	R	R	R	R/W	R/W

Table 23.212 Contents of the TAUDnCMURm register for the Slave Channels 2 to 7 of the Non-Complementary Modulation Output Function Type 2

Bit Position	Bit Name	Function
7 to 2	Reserved	When read, the value after reset is read. When writing, write the value after reset.
1, 0	TAUDnTIS[1:0]	00: Unused. Set to 00.

(3) Output mode for slave channels 2 to 7

Table 23.213 Control Bit Settings in Synchronous Channel Output Mode 2 with Non-Complementary Modulation Output

Bit Name	Setting
TAUDnTOE.TAUDnTOEm	1: Enables independent channel output mode
TAUDnTOM.TAUDnTOMm	1: Synchronous channel output
TAUDnTOC.TAUDnTOCm	1: Operating mode 2
TAUDnTOL.TAUDnTOLm	0: Positive logic 1: Negative logic
TAUDnTDE.TAUDnTDEm	0: Disables dead time operation
TAUDnTDM.TAUDnTDMm	0: When dead time operation is disabled (TAUDnTDE.TAUDnTDEm = 0), set these bits to 0
TAUDnTDL.TAUDnTDLm	
TAUDnTRE.TAUDnTREm	1: Enables real-time output.
TAUDnTRO.TAUDnTROm	0: Real-time output is low. 1: Real-time output is high.
TAUDnTRC.TAUDnTRCm	0: The upper channel generates the real-time output trigger for channel m
TAUDnTME.TAUDnTMEm	0: Disables modulation 1: Enables modulation

(4) Simultaneous rewrite for slave channels 2 to 7

Both master and slave channels should have the same simultaneous rewrite settings.

Table 23.214 Simultaneous Rewrite Settings for Slave Channels 2 to 7 of Non-Complementary Modulation Output Function Type 2

Bit Name	Setting
TAUDnRDE.TAUDnRDEm	1: Enables simultaneous rewrite.
TAUDnRDS.TAUDnRDSm	0: Monitors master channel for simultaneous rewrite triggers. 1: Monitors upper channel other than the channel group for simultaneous rewrite triggers.
TAUDnRDM.TAUDnRDMm	1: A simultaneous rewrite trigger signal is generated when master channel starts to count and the corresponding slave channel is at the peak of a triangular wave.
TAUDnRDC.TAUDnRDCm	0: Does not operate as a simultaneous rewrite trigger generation channel. When TAUDnRDS.TAUDnRDSm = 0, the master channel is monitored for simultaneous rewrite triggers regardless of the value of this bit.

23.14.2.7 Operating Procedure for Non-Complementary Modulation Output Function Type 2

Table 23.215 Operating Procedure for Non-Complementary Modulation Output Function Type 2 (1/2)

	Operation	TAUDn Status
Initial Channel Setting	Master channels: Set TAUDnCMORm/ TAUDnCMURm register and the channel output mode as described in **Section 23.14.2.4, Register Settings for Master Channels**. Slave channel 1: Set TAUDnCMORm/ TAUDnCMURm register and the channel output mode as described in **Section 23.14.2.5, Register Settings for Slave Channel 1**. Slave channels 2 to 7: Set TAUDnCMORm/ TAUDnCMURm register and the channel output mode as described in **Section 23.14.2.6, Register Settings for slave channels 2 to 7**. Set the value of TAUDnCDRm register of every channel. Set pulse cycle in TAUDnCDRm of master channel, and in TAUDnCDRm of slave channel 1, set the number of interrupts from master channel to be ignored before slave channel 1 generates a real-time output trigger. Set duty width in TAUDnCDRm of slave channels 2 to 7. Set TAUDnTRC.TAUDnTRCm to 1 on slave channel 1.	Channel operation is stopped.

Table 23.215 Operating Procedure for Non-Complementary Modulation Output Function Type 2 (2/2)

	Operation	TAUDn Status
Start Operation	Set TAUDnTS.TAUDnTSm of master and slave channels to 1 simultaneously. TAUDnTS.TAUDnTSm is a trigger bit, which is automatically cleared to 0.	TAUDnTE.TAUDnTEm of master and slave channels is set to 1 and the counter starts counting down.
During Operation	TAUDnCDRm, TAUDnTRO.TAUDnTROm, and TAUDnTMEm.TAUDnTMEm can be changed at any time. TAUDnCNTm and TAUDnRSF.TAUDnRSFm can be read at any time. TAUDnRDT.TAUDnRDTm can be changed during operation.	TAUDnCDRm value of master channel and slave channels 2 to 7 is loaded into TAUDnCNTm to perform count down. The TAUDnCDRm value of slave channel 1 is loaded and the counter waits for an interrupt from the master channel. When the counter of master channel reaches 0000_H: • INTTAUDnIm is generated. • TAUDnCDRm value is reloaded into TAUDnCNTm to continue counting down. • The TAUDnCNTm value of slave channel 1 decrements by 1 and the counter waits for a next interrupt from the master channel. • TAUDnCNTm of slave channels 2 to 7 reloads the TAUDnCDRm value or starts counting in opposite direction. • When the TAUDnCDRm value is loaded, the TAUDnTRO.TAUDnTROm value of slave channel 2 to 7 is reflected to the TAUDTTOUTm output. • When slave channel detects an interrupt of the master channel for TAUDnCDRm + 1 count. – INTTAUDnIm is generated. – The TAUDnTRO.TAUDnTROm value of slave channel 2 to 7 is reflected to the TAUDTTOUTm output. • When the counter of slave channel 1 reaches 0000_H, it waits for a next interrupt from the master channel. When an interrupt is detected: – INTTAUDnIm is generated. • When the counter of slave channels 2 to 7 reaches 0001_H: – INTTAUDnIm is generated. – PWM output signals of slave channels 2 to 7 are set/reset. TAUDnTTOUTm of slave channels 2 to 7 outputs a PWM signal, a high-level signal or low-level signal depending on the values of real-time output bits (TAUDnTRO.TAUDnTROm) and modulation output bit (TAUDnTME.TAUDnTMEm) of a pair of slave channels.
Stop Operation	Set TAUDnTT.TAUDnTTm of master and slave channels to 1 simultaneously. TAUDnTT.TAUDnTTm is a trigger bit, which is automatically cleared to 0.	TAUDnTE.TAUDnTEm is cleared to 0 and the counter stops. TAUDnCNTm and TAUDnTTOUTm stop and retain their current values.

Restart

23.14.2.8 Specific Timing Diagrams

The following settings apply to the general timing diagram.

- Master channel: No INTTAUDnIm is generated at start of operation. (TAUDnCMORm.TAUDnMD0 = 0)
- Slave channels 2 to 7: Positive logic (TAUDnTOL.TAUDnTOLm = 0)

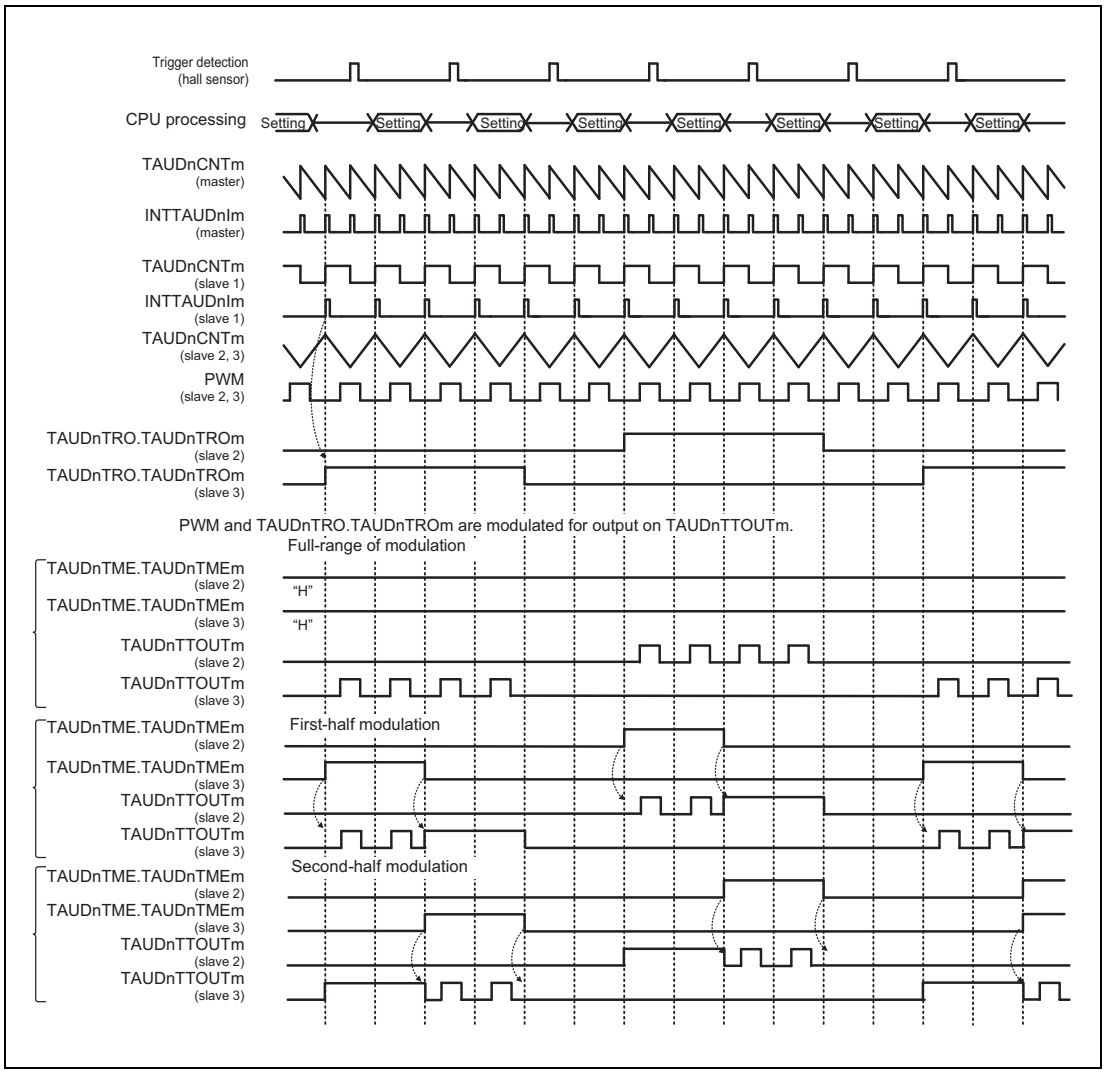

Figure 23.123 Specific Timing Diagram of Non-Complementary Modulation Output Function Type 2

The above timing diagram shows how full modulation, first-half modulation, and second-half modulation can be achieved by modifying the TAUDnTME.TAUDnTMEm bits of lower slave channels during operation.

The "Setting" symbol indicates a time period when the values of TAUDnCDRm, TAUDnTME.TAUDnTMEm, and TAUDnTRO.TAUDnTROm can be changed.

TAUDnTME.TAUDnTMEm setting is reflected by detecting the count start timing and triangle PWM carrier cycle (peak interrupt timing).

TAUDnTRO.TAUDnTROm bit value is set by software, but a new setting is applied only when an interrupt occurs on slave channel 1.

23.14.3 Complementary Modulation Output Function

23.14.3.1 Overview

Summary

This function outputs a triangular PWM output signal, a high-level signal, or low-level signal from TAUDnTTOUTm adding dead time depending on the real-time output bit value (TAUDnTRO.TAUDnTROm), the modulation output bit value (TAUDnTME.TAUDnTMEm), and the output level bit value (TAUDnTDL.TAUDnTDLm) of a pair of slave channels. Three pairs of channels are typically used.

Prerequisites

- One master channel and seven slave channels
- The operating mode of the master channel must be set to interval timer mode. (See **Table 23.217, Contents of the TAUDnCMORm register for the Master Channel of the Complementary Modulation Output Function**)
- The operating mode for slave channel 1 should be set to event count mode. (See **Table 23.221, Contents of the TAUDnCMORm register for the Slave Channel 1 of the Complementary Modulation Output Function**)
- The operating mode for slave channels 2, 4 and 6 should be set to up/down count mode. (See **Table 23.224, Contents of the TAUDnCMORm register for the Slave Channels 2, 4, and 6 of the Complementary Modulation Output Function**)
- The operating mode for slave channels 3, 5 and 7 should be set to one-count mode. (See **Table 23.228, Contents of the TAUDnCMORm register for the Slave Channels 3, 5, and 7 of the Complementary Modulation Output Function**). Do not use interrupts of slave channel 3, 5, and 7 as interrupt sources because generation count is not determined uniquely.
- The output mode for master channels should be set to independent channel output mode 1. (See **23.7, Channel Output Modes**)
- This function does not use TAUDnTTOUTm of slave channel 1 but TAUDnTRC.TAUDnTRCm should be set to 1. (See **Section 23.7, Channel Output Modes**)
- The channel output mode for slave channels 2 to 7 should be set to synchronous channel output mode 2 with complementary modulation output. (See **Section 23.7, Channel Output Modes**)

Functional description

- Master channel:
  The counter of master channel is enabled by setting the channel trigger bit (TAUDnTS.TAUDnTSm) to 1. This sets TAUDnTE.TAUDnTEm = 1, enabling count operation. The value of data register (TAUDnCDRm) of master channel is loaded into the counter (TAUDnCNTm) and the counter starts to count down from this value.
  When the counter of master channel reaches 0000_H, INTTAUDnIm occurs. This decrements the counter value of slave channel 1 by 1 and the counter of slave channel 2 starts to count in the opposite direction.

- Slave channel 1:
  When the counter reaches 0000_H, slave channel 1 waits for the next interrupt from the master channel. And the TAUDnCDRm value is reloaded into TAUDnCNTm (slave 1) and INTTAUDnIm is generated.
  Slave channel 1 is set as a real-time output trigger channel (TAUDnTRC.TAUDnTRCm = 1). The value of real-time output bit (TAUDnTRO.TAUDnTROm) of each channel is applied to the channel that detects the occurrence of an interrupt on slave channel 1. The real-time output bit value can be changed in any timing by application software but a new value is not applied until an interrupt occurs on slave channel 1.
- Slave channel 2:
  When the slave channel 2 counter reaches 0001_H, the slave channel 3 counter starts counting down. When the slave channel 3 counter reaches 0000_H, an interrupt occurs.
- Slave channels 2 and 3:
  The combined use of the master channel and slave channels 2 and 3 generates a PWM output signal. The master channel generates a PWM output cycle, slave channel 2 generates a duty cycle, and slave channel 3 generates dead time.
- Slave channels 4 to 7:
  Slave channels 4 and 6 operate like slave channel 2. Slave channels 5 and 7 operate like slave channel 3.

As in **Table 23.216, TAUDnTTOUTm Output (TAUDnTOL.TAUDnTOLm = 0) for a Pair of Slave Channels of Complementary Modulation Output Function,** a signal that is output from TAUDnTTOUTm depends on a real-time output bit value (TAUDnTRO.TAUDnTROm), a modulation output bit value (TAUDnTME.TAUDnTMEm), and an output level bit value (TAUDnTDL.TAUDnTDLm) of the slave channel.

It is, however, prohibited that a high-level signal is output from both channel 2 and channel 3 (in order to prevent a motor driver short circuit). This function cannot perform a forcible restart.

The counter can be stopped by setting TAUDnTT.TAUDnTTm of master and slave channels to 1. This sets TAUDnTE.TAUDnTEm to 0. TAUDnCNTm and TAUDnTTOUTm of master and slave channels stop but retain their values. The counters can be restarted by setting TAUDnTS.TAUDnTSm to 1.

Conditions

- If TAUDnTME.TAUDnTMEm of a pair of channels is set to 1 (TAUDnTOL.TAUDnTOLm = 0):
  - If TAUDnTRO.TAUDnTROm of one channel is set to 1, TAUDnTTOUTm outputs the corresponding PWM of the channel.
  - If TAUDnTRO.TAUDnTROm of each channel is set to 0, a pair of TAUDnTTOUTm outputs a low-level signal.
- If TAUDnTME.TAUDnTMEm of a pair of channels is set to 0 (TAUDnTOL.TAUDnTOLm = 0):
  - If TAUDnTRO.TAUDnTROm is set to 1, TAUDnTTOUTm of the channel outputs a high-level signal.
  - If TAUDnTRO.TAUDnTROm is set to 0, TAUDnTTOUTm of the channel outputs a low-level signal.
- If TAUDnTOL.TAUDnTOLm is set to 1, high-level and low-level signals output from TAUDnTTOUTm are inverted. PWM signals become negative logic.

Table 23.216 TAUDnTTOUTm Output (TAUDnTOL.TAUDnTOLm = 0) for a Pair of Slave Channels of Complementary Modulation Output Function

TAUDnTME. TAUDnTME2	TAUDnTME. TAUDnTME3	TAUDnTRO. TAUDnTRO2	TAUDnTRO. TAUDnTRO3	TAUDnTDL. TAUDnTDL2	TAUDnTDL. TAUDnTDL3	TAUDnTTOUT2 Output	TAUDnTTOUT3 Output
0	0	0	0	X	X	Low level	Low level
		0	1	0	1	Low level	High level
		1	0	1	0	High level	Low level
		1	1	X	X	Setting prohibited	Setting prohibited
1	1	0	0	X	X	Low level	Low level
		0	1	0	1	~PWMm	PWMm
		1	0	1	0	PWMm	~PWMm
		1	1	X	X	Setting prohibited	Setting prohibited

NOTES

1. PWM in this Table indicates a normal PWM signal and ~PWM indicates an inverted PWM signal (positive logic). PWM and ~PWM are set by TAUDnTDL.TAUDnTDLm.
2. Any settings not listed above are prohibited.

- If TAUDnTME.TAUDnTMEm is continuously set to 1 while TAUDnTRO.TAUDnTROm of one of paired channels is set to 1, full modulation is applied.
- If TAUDnTME.TAUDnTMEm is set to 1 at the first half of the period while TAUDnTRO.TAUDnTROm of one of paired channels is set to 1, first-half modulation is applied.
- If TAUDnTME.TAUDnTMEm is set to 1 at the second half of the period while TAUDnTRO.TAUDnTROm of one of paired channels is set to 1, second-half modulation is applied.

- Whether dead time is added to a normal or inverted phase PWM signal when two channels become high-level signal outputs simultaneously depends on a TAUDnTDL.TAUDnTDLm bit value.
  - If TAUDnTDL.TAUDnTDLm = 0, dead time is added to a normal phase PWM signal.
  - If TAUDnTDL.TAUDnTDLm = 1, dead time is added to a reverse phase PWM signal.
  - The operation defined by a TAUDnTDL.TAUDnTDLm bit value should be conducted by application software during operation. To modify TAUDnTDL.TAUDnTDLm, rewrite it during the period when TAUDnTRO.TAUDnTROm is 00_B.
- The value of TAUDnCDRm of slave channel 1 should be set to the value that generates INTTAUDnIm on slave channel 1 at the peak of a carrier cycle.
- Set TAUDnCMORm.TAUDnMD0 of master channel to 0.
- This function enables simultaneous rewrite. See **Section 23.6, Simultaneous Rewrite**.
- When TAUDnTOL.TAUDnTOLm = 0 is set in slave channel 2 to 7:
  - If TAUDnTDL.TAUDnTDLm = 0, set TAUDnTO.TAUDnTOm to 0 (low level) before setting TAUDnTE.TAUDnTEm = 0.
  - If TAUDnTDL.TAUDnTDLm = 1, set TAUDnTO.TAUDnTOm to 1 (high level) before setting TAUDnTE.TAUDnTEm = 0.
- When TAUDnTOL.TAUDnTOLm = 1 is set in slave channel 2 to 7:
  - If TAUDnTDL.TAUDnTDLm = 0, set TAUDnTO.TAUDnTOm to 1 (high level) before setting TAUDnTE.TAUDnTEm = 0.
  - If TAUDnTDL.TAUDnTDLm = 1, set TAUDnTO.TAUDnTOm to 0 (low level) before setting TAUDnTE.TAUDnTEm = 0.

23.14.3.2 Equations

Pulse cycle = [TAUDnCDRm (master) + 1] × count clock cycle

$0000_H \leq$ TAUDnCDRm (master) $< FFFF_H$

Carrier cycle (down/up) = [TAUDnCDRm (master) + 1] × 2 × count clock cycle

For slave channel 2 and 3:

PWM signal width (normal) = [(TAUDnCDRm (master) + 1 – TAUDnCDRm (slave 2)) × 2 – (TAUDnCDRm (slave 3) + 1)] × count clock cycle

PWM signal width (inverted) = [(TAUDnCDRm (master) + 1 – TAUDnCDRm (slave 2)) × 2 – (TAUDnCDRm (slave 3) + 1)] × count clock cycle

For slave channels 4 to 7:

Calculate slave channel 4 and 6 in the same way as slave channel 2 whereas calculate slave channel 5 and 7 in the same way as slave channel 3.

23.14.3.3 Block Diagram and General Timing Diagram

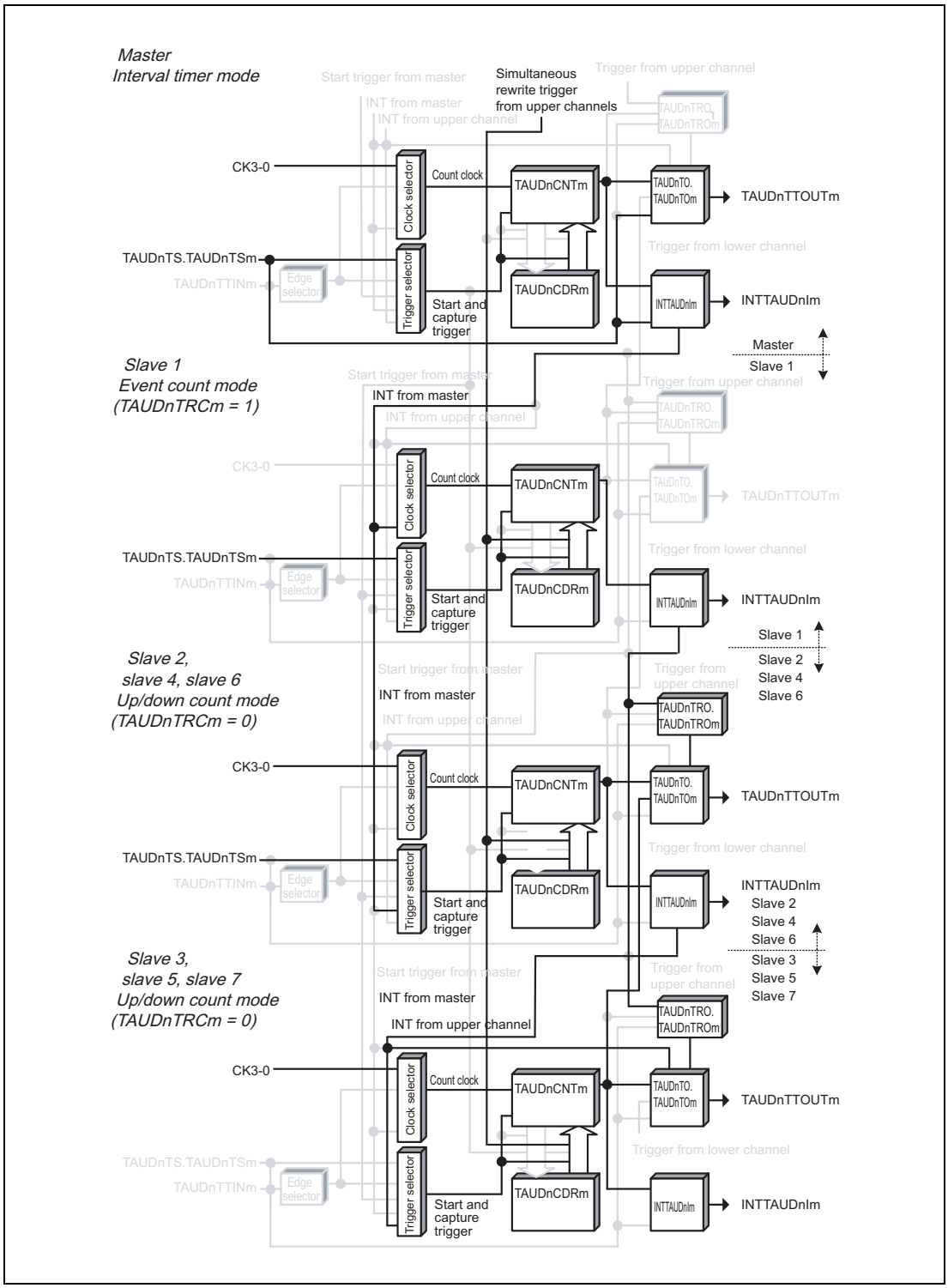

Figure 23.124 Block Diagram of Complementary Modulation Output Function

The following settings apply to the general timing diagram.

- Master channel: INTTAUDnIm not generated at the beginning of operation. (TAUDnCMORm.TAUDnMD0 = 0)
- Slave channels 1: TAUDnCDRm=0001_H

- Slave channels 2 to 7: Positive logic (TAUDnTOL.TAUDnTOLm = 0)

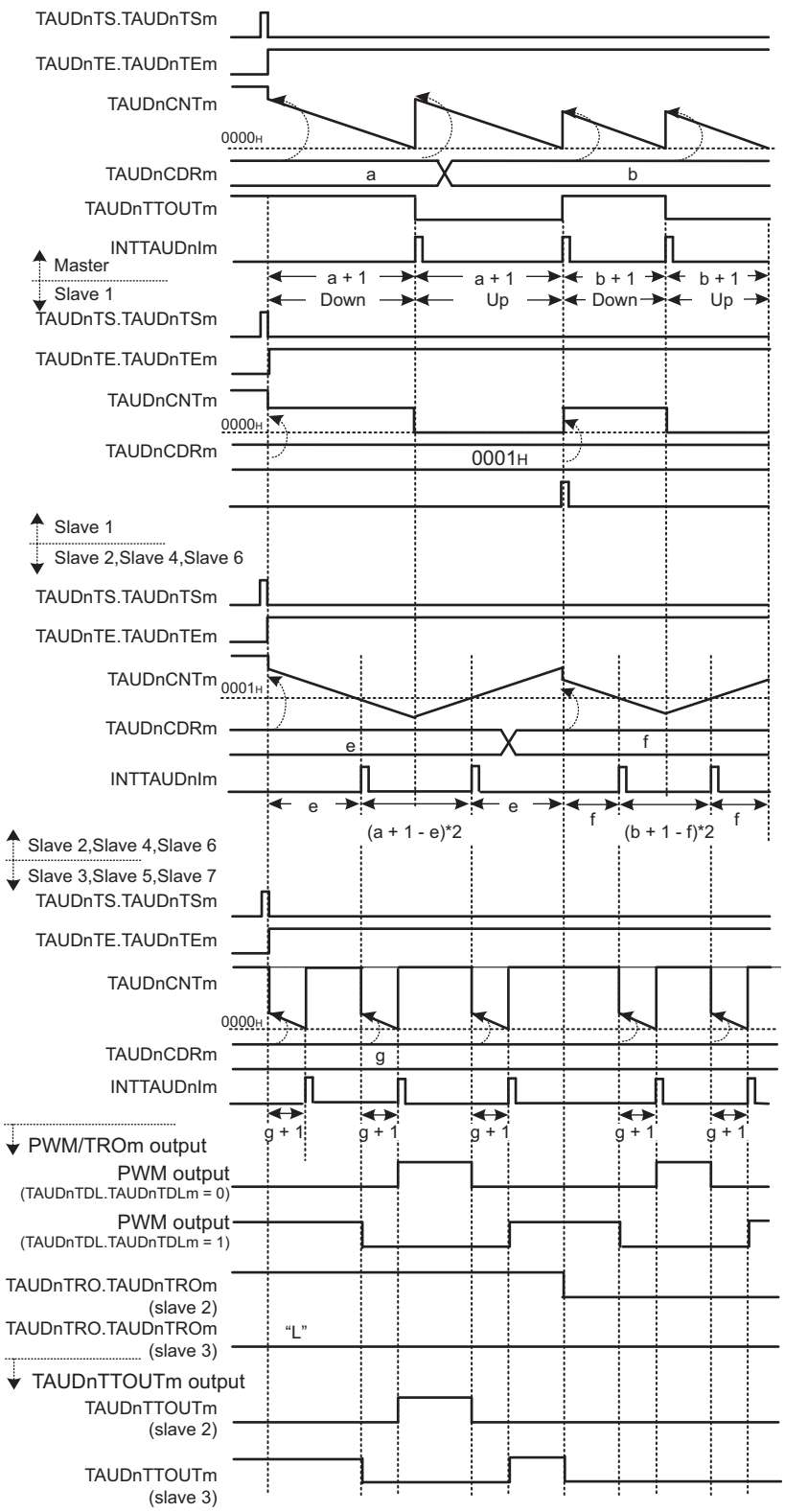

Figure 23.125 General Timing Diagram of Complementary Modulation Output Function

23.14.3.4 Register Settings for Master Channels

(1) TAUDnCMORm for master channels

Bit	15	14	13	12	11	10	9	8	7	6	5	4	3	2	1	0
	TAUDnCKS[1:0]		TAUDnCCS[1:0]		TAUDn MAS	TAUDnSTS[2:0]			TAUDnCOS[1:0]		—	TAUDnMD[4:1]				TAUDn MD0
Value after reset	0	0	0	0	0	0	0	0	0	0	0	0	0	0	0	0
R/W	R/W	R/W	R/W	R/W	R/W	R/W	R/W	R/W	R/W	R/W	R	R/W	R/W	R/W	R/W	R/W

Table 23.217 Contents of the TAUDnCMORm register for the Master Channel of the Complementary Modulation Output Function

Bit Position	Bit Name	Function
15, 14	TAUDnCKS[1:0]	Operating Clock Selection 00: Prescaler output CK0 01: Prescaler output CK1 10: Prescaler output CK2 11: Prescaler output CK3 The value of the TAUDnCKS[1:0] bit of the master and slave channels must be identical.
13, 12	TAUDnCCS[1:0]	00: Uses an operating clock as a count clock
11	TAUDnMAS	1: Channel is master channel
10 to 8	TAUDnSTS[2:0]	000: Trigger the counter using software.
7, 6	TAUDnCOS[1:0]	00: Unused. Set to 00.
5	Reserved	When read, the value after reset is read. When writing, write the value after reset.
4 to 1	TAUDnMD[4:1]	0000: Interval timer mode
0	TAUDnMD0	0: INTTAUDnIm is not generated and TAUDnTTOUTm is not toggled at the beginning of operation or at a restart time. 1: INTTAUDnIm is generated to toggle TAUDnTTOUTm at the beginning of an operation.

(2) TAUDnCMURm for master channels

Bit	7	6	5	4	3	2	1	0
	—	—	—	—	—	—	TAUDnTIS[1:0]	
Value after reset	0	0	0	0	0	0	0	0
R/W	R	R	R	R	R	R	R/W	R/W

Table 23.218 Contents of the TAUDnCMURm register for the Master Channel of the Complementary Modulation Output Function

Bit Position	Bit Name	Function
7 to 2	Reserved	When read, the value after reset is read. When writing, write the value after reset.
1, 0	TAUDnTIS[1:0]	00: Unused. Set to 00.

(3) Channel output mode of master channel

Table 23.219 Control Bit Settings in Independent Channel Output Mode 1

Bit Name	Setting
TAUDnTOE.TAUDnTOEm	1: Enables independent channel output mode
TAUDnTOM.TAUDnTOMm	0: Independent channel output
TAUDnTOC.TAUDnTOCm	0: Operating mode 1 (Toggle mode if TAUDnTOM.TAUDnTOMm = 0)
TAUDnTOL.TAUDnTOLm	0: Setting is disabled (value after reset) in toggle mode.
TAUDnTDE.TAUDnTDEm	0: Disables dead time operation
TAUDnTDM.TAUDnTDMm	0: When dead time operation is disabled (TAUDnTDE.TAUDnTDEm = 0), set these bits to 0
TAUDnTDL.TAUDnTDLm	
TAUDnTRE.TAUDnTREm	0: Disables real-time output
TAUDnTRO.TAUDnTROm	0: When real-time output is disabled (TAUDnTRE.TAUDnTREm = 0), set these bits to 0
TAUDnTRC.TAUDnTRCm	
TAUDnTME.TAUDnTMEm	0: Disables modulation

(4) Simultaneous rewrite for master channels

Both master and slave channels should have the same simultaneous rewrite settings.

Table 23.220 Simultaneous Rewrite Settings for Master Channels of Complementary Modulation Output Function

Bit Name	Setting
TAUDnRDE.TAUDnRDEm	1: Enables simultaneous rewrite.
TAUDnRDS.TAUDnRDSm	0: Monitors master channel for simultaneous rewrite triggers. 1: Monitors upper channel other than the channel group for simultaneous rewrite triggers.
TAUDnRDM.TAUDnRDMm	1: A simultaneous rewrite trigger signal is generated when master channel counter is started and the corresponding slave channel is at the peak of triangular wave.
TAUDnRDC.TAUDnRDCm	0: Does not operate as a simultaneous rewrite trigger generation channel. When TAUDnRDS.TAUDnRDSm = 0, the master channel is monitored for simultaneous rewrite triggers regardless of the value of this bit.

NOTE

If TAUDnRDS.TAUDnRDSm = 1, it is necessary for an upper channel higher than a master channel to generate a simultaneous rewrite trigger signal.

23.14.3.5 Register Settings for Slave Channel 1

(1) TAUDnCMORm for slave channel 1

Bit	15	14	13	12	11	10	9	8	7	6	5	4	3	2	1	0
	TAUDnCKS[1:0]		TAUDnCCS[1:0]		TAUDn MAS	TAUDnSTS[2:0]			TAUDnCOS[1:0]		—	TAUDnMD[4:1]				TAUDn MD0
Value after reset	0	0	0	0	0	0	0	0	0	0	0	0	0	0	0	0
R/W	R/W	R/W	R/W	R/W	R/W	R/W	R/W	R/W	R/W	R/W	R	R/W	R/W	R/W	R/W	R/W

Table 23.221 Contents of the TAUDnCMORm register for the Slave Channel 1 of the Complementary Modulation Output Function

Bit Position	Bit Name	Function
15, 14	TAUDnCKS[1:0]	Operating Clock Selection 00: Prescaler output CK0 01: Prescaler output CK1 10: Prescaler output CK2 11: Prescaler output CK3 The value of the TAUDnCKS[1:0] bit of the master and slave channels must be identical.
13, 12	TAUDnCCS[1:0]	11: INTTAUDnIm of the master channel is used as the count clock
11	TAUDnMAS	0: Slave channel
10 to 8	TAUDnSTS[2:0]	000: Trigger the counter using software. 011: Triggers simultaneous rewrite.
7, 6	TAUDnCOS[1:0]	00: Unused. Set to 00.
5	Reserved	When read, the value after reset is read. When writing, write the value after reset.
4 to 1	TAUDnMD[4:1]	0011: Event count mode
0	TAUDnMD0	0: INTTAUDnIm is not generated at the beginning of operation or at a restart time.

(2) TAUDnCMURm for slave channel 1

Bit	7	6	5	4	3	2	1	0
	—	—	—	—	—	—	TAUDnTIS[1:0]	
Value after reset	0	0	0	0	0	0	0	0
R/W	R	R	R	R	R	R	R/W	R/W

Table 23.222 Contents of the TAUDnCMURm register for the Slave Channel 1 of the Complementary Modulation Output Function

Bit Position	Bit Name	Function
7 to 2	Reserved	When read, the value after reset is read. When writing, write the value after reset.
1, 0	TAUDnTIS[1:0]	00: Unused. Set to 00.

(3) Channel output mode

TAUDnTOE.TAUDnTOEm is set to 0 because the channel output mode is not used on slave channel 1 with this function. However, this mode can be used in independent channel output mode controlled by software.

CAUTION

TAUDnTRC.TAUDnTRCm should be set to 1 because slave channel 1 is used as a real-time output trigger channel.

(4) Simultaneous rewrite for slave channel 1

Both master and slave channels should have the same simultaneous rewrite settings.

Table 23.223 Simultaneous Rewrite Settings for Slave Channel 1 of Complementary Modulation Output Function

Bit Name	Setting
TAUDnRDE.TAUDnRDEm	1: Enables simultaneous rewrite.
TAUDnRDS.TAUDnRDSm	0: Monitors master channel for simultaneous rewrite triggers. 1: Monitors upper channel other than the channel group for simultaneous rewrite triggers.
TAUDnRDM.TAUDnRDMm	1: A simultaneous rewrite trigger signal is generated when master channel counter is started and the corresponding slave channel is at the peak of triangular wave.
TAUDnRDC.TAUDnRDCm	0: Does not operate as a simultaneous rewrite trigger generation channel. When TAUDnRDS.TAUDnRDSm = 0, the master channel is monitored for simultaneous rewrite triggers regardless of the value of this bit.

23.14.3.6 Register Settings for slave channels 2, 4, and 6

(1) TAUDnCMORm for slave channels 2, 4, and 6

Bit	15	14	13	12	11	10	9	8	7	6	5	4	3	2	1	0
	TAUDnCKS[1:0]		TAUDnCCS[1:0]		TAUDn MAS	TAUDnSTS[2:0]			TAUDnCOS[1:0]		—	TAUDnMD[4:1]				TAUDn MD0
Value after reset	0	0	0	0	0	0	0	0	0	0	0	0	0	0	0	0
R/W	R/W	R/W	R/W	R/W	R/W	R/W	R/W	R/W	R/W	R/W	R	R/W	R/W	R/W	R/W	R/W

Table 23.224 Contents of the TAUDnCMORm register for the Slave Channels 2, 4, and 6 of the Complementary Modulation Output Function

Bit Position	Bit Name	Function
15, 14	TAUDnCKS[1:0]	Operating Clock Selection 00: Prescaler output CK0 01: Prescaler output CK1 10: Prescaler output CK2 11: Prescaler output CK3 The value of the TAUDnCKS[1:0] bit of the master and slave channels must be identical.
13, 12	TAUDnCCS[1:0]	00: Uses an operating clock as a count clock
11	TAUDnMAS	0: Slave channel
10 to 8	TAUDnSTS[2:0]	111: Up/down output trigger signal of master channel
7, 6	TAUDnCOS[1:0]	00: Unused. Set to 00.
5	Reserved	When read, the value after reset is read. When writing, write the value after reset.
4 to 1	TAUDnMD[4:1]	1001: Up/down count mode
0	TAUDnMD0	0: INTTAUDnIm is not generated at the beginning of operation or at a restart time.

(2) TAUDnCMURm for slave channels 2, 4, and 6

Bit	7	6	5	4	3	2	1	0
	—	—	—	—	—	—	TAUDnTIS[1:0]	
Value after reset	0	0	0	0	0	0	0	0
R/W	R	R	R	R	R	R	R/W	R/W

Table 23.225 Contents of the TAUDnCMURm register for the Slave Channels 2, 4, and 6 of the Complementary Modulation Output Function

Bit Position	Bit Name	Function
7 to 2	Reserved	When read, the value after reset is read. When writing, write the value after reset.
1, 0	TAUDnTIS[1:0]	00: Unused. Set to 00.

(3) Output mode for slave channels 2, 4, and 6

Table 23.226 Control Bit Settings in Synchronous Channel Output Mode 2 with Complementary Modulation Output

Bit Name	Setting
TAUDnTOE.TAUDnTOEm	1: Enables independent channel output mode
TAUDnTOM.TAUDnTOMm	1: Synchronous channel output
TAUDnTOC.TAUDnTOCm	1: Operating mode 2
TAUDnTOL.TAUDnTOLm	0: Positive logic 1: Negative logic
TAUDnTDE.TAUDnTDEm	1: Enables dead time operation.
TAUDnTDM.TAUDnTDMm	0: Adds dead time upon detection of a duty cycle on an even-numbered upper channel and when the condition set in TAUDnTDL.TAUDnTDLm is met.
TAUDnTDL.TAUDnTDLm	0: Adds dead time to normal phase. 1: Adds dead time to reverse phase.
TAUDnTRE.TAUDnTREm	1: Enables real-time output.
TAUDnTRO.TAUDnTROm	0: Real-time output is low. 1: Real-time output is high.
TAUDnTRC.TAUDnTRCm	0: Upper channel generates a real-time output trigger for channel m.
TAUDnTME.TAUDnTMEm	0: Disables modulation 1: Enables modulation

CAUTION

Set TAUDnTDL.TAUDnTDLm exclusively from odd-numbered channels during PWM output.

(4) Simultaneous rewrite for slave channels 2, 4, and 6

Both master and slave channels should have the same simultaneous rewrite settings.

Table 23.227 Simultaneous Rewrite Settings for Slave Channels 2, 4, and 6 of Complementary Modulation Output Function

Bit Name	Setting
TAUDnRDE.TAUDnRDEm	1: Enables simultaneous rewrite.
TAUDnRDS.TAUDnRDSm	0: Monitors master channel for simultaneous rewrite triggers. 1: Monitors upper channel other than the channel group for simultaneous rewrite triggers.
TAUDnRDM.TAUDnRDMm	1: A simultaneous rewrite trigger signal is generated when master channel starts to count and the corresponding slave channel is at the peak of a triangular wave.
TAUDnRDC.TAUDnRDCm	0: Does not operate as a simultaneous rewrite trigger generation channel. When TAUDnRDS.TAUDnRDSm = 0, the master channel is monitored for simultaneous rewrite triggers regardless of the value of this bit.

23.14.3.7 Register Settings for slave channels 3, 5, and 7

(1) TAUDnCMORm for slave channels 3, 5, and 7

Bit	15	14	13	12	11	10	9	8	7	6	5	4	3	2	1	0
	TAUDnCKS[1:0]		TAUDnCCS[1:0]		TAUDn MAS	TAUDnSTS[2:0]			TAUDnCOS[1:0]		—	TAUDnMD[4:1]				TAUDn MD0
Value after reset	0	0	0	0	0	0	0	0	0	0	0	0	0	0	0	0
R/W	R/W	R/W	R/W	R/W	R/W	R/W	R/W	R/W	R/W	R/W	R	R/W	R/W	R/W	R/W	R/W

Table 23.228 Contents of the TAUDnCMORm register for the Slave Channels 3, 5, and 7 of the Complementary Modulation Output Function

Bit Position	Bit Name	Function
15, 14	TAUDnCKS[1:0]	Operating Clock Selection 00: Prescaler output CK0 01: Prescaler output CK1 10: Prescaler output CK2 11: Prescaler output CK3 The TAUDnCKS[1:0] values of master and slave channels must be identical.
13, 12	TAUDnCCS[1:0]	00: Uses an operating clock as a count clock
11	TAUDnMAS	0: Slave channel
10 to 8	TAUDnSTS[2:0]	110: Dead time trigger
7, 6	TAUDnCOS[1:0]	00: Unused. Set to 00.
5	Reserved	When read, the value after reset is read. When writing, write the value after reset.
4 to 1	TAUDnMD[4:1]	0100: One-count mode
0	TAUDnMD0	1: Enables start trigger detection while counting.

(2) TAUDnCMURm for slave channels 3, 5, and 7

Bit	7	6	5	4	3	2	1	0
	—	—	—	—	—	—	TAUDnTIS[1:0]	
Value after reset	0	0	0	0	0	0	0	0
R/W	R	R	R	R	R	R	R/W	R/W

Table 23.229 Contents of the TAUDnCMURm register for the Slave Channels 3, 5, and 7 of the Complementary Modulation Output Function

Bit Position	Bit Name	Function
7 to 2	Reserved	When read, the value after reset is read. When writing, write the value after reset.
1, 0	TAUDnTIS[1:0]	00: Unused. Set to 00.

(3) Output mode for slave channels 3, 5, and 7

Table 23.230 Control Bit Settings in Synchronous Channel Output Mode 2 with Complementary Modulation Output

Bit Name	Setting
TAUDnTOE.TAUDnTOEm	1: Enables independent channel output mode
TAUDnTOM.TAUDnTOMm	1: Synchronous channel output
TAUDnTOC.TAUDnTOCm	1: Operating mode 2
TAUDnTOL.TAUDnTOLm	0: Positive logic 1: Negative logic
TAUDnTDE.TAUDnTDEm	1: Enables dead time operation.
TAUDnTDM.TAUDnTDMm	0: Adds dead time upon detection of a duty cycle on an even-numbered upper channel and when the condition set in TAUDnTDL.TAUDnTDLm is met.
TAUDnTDL.TAUDnTDLm	0: Adds dead time to normal phase. 1: Adds dead time to reverse phase.
TAUDnTRE.TAUDnTREm	1: Enables real-time output.
TAUDnTRO.TAUDnTROm	0: Real-time output is low. 1: Real-time output is high.
TAUDnTRC.TAUDnTRCm	0: Upper channel generates a real-time output trigger for channel m.
TAUDnTME.TAUDnTMEm	0: Disables modulation 1: Enables modulation

CAUTION

Set TAUDnTDL.TAUDnTDLm exclusively from even-numbered channels during PWM output.

(4) Simultaneous rewrite for slave channels 3, 5, and 7

Both master and slave channels should have the same simultaneous rewrite settings.

Table 23.231 Simultaneous Rewrite Settings for Slave Channels 3, 5, and 7 of Complementary Modulation Output Function

Bit Name	Setting
TAUDnRDE.TAUDnRDEm	1: Enables simultaneous rewrite.
TAUDnRDS.TAUDnRDSm	0: Monitors master channel for simultaneous rewrite triggers. 1: Monitors upper channel other than the channel group for simultaneous rewrite triggers.
TAUDnRDM.TAUDnRDMm	1: A simultaneous rewrite trigger signal is generated when master channel counter is started and the corresponding slave channel is at the peak of triangular wave.
TAUDnRDC.TAUDnRDCm	0: Does not operate as a simultaneous rewrite trigger generation channel. When TAUDnRDS.TAUDnRDSm = 0, the master channel is monitored for simultaneous rewrite triggers regardless of the value of this bit.

23.14.3.8 Operating Procedure for Complementary Modulation Output Function

Table 23.232 Operating Procedure for Complementary Modulation Output Function (1/2)

		Operation	TAUDn Status
	Initial Channel Setting	Master channels: Set TAUDnCMORm/ TAUDnCMURm register and the channel output mode as described in **Section 23.14.3.4, Register Settings for Master Channels**. Slave channel 1: Set TAUDnCMORm/ TAUDnCMURm register and the channel output mode as described in **Section 23.14.3.5, Register Settings for Slave Channel 1**. Slave channels 2, 4, and 6: Set TAUDnCMORm/ TAUDnCMURm register and the channel output mode as described in **Section 23.14.3.6, Register Settings for slave channels 2, 4, and 6**. Slave channels 3, 5, and 7: Set TAUDnCMORm/ TAUDnCMURm register and the channel output mode as described in **Section 23.14.3.7, Register Settings for slave channels 3, 5, and 7**. Set the value of TAUDnCDRm register of every channel. Set a pulse cycle using TAUDnCDRm of master channel, and an interrupt count of master channel ignored using TAUDnCDRm of slave channel 1. Also set a duty width in TAUDnCDRm of slave channels 2, 4, and 6, and a dead time delay on slave channels 3, 5, and 7. Set TAUDnTRC.TAUDnTRCm to 1 on slave channel 1.	Channel operation is stopped.
Restart	Start Operation	Set TAUDnTS.TAUDnTSm of master and slave channels to 1 simultaneously. TAUDnTS.TAUDnTSm is a trigger bit, which is automatically cleared to 0.	TAUDnTE.TAUDnTEm of master and slave channels is set to 1 and the counter starts counting down.

Table 23.232 Operating Procedure for Complementary Modulation Output Function (2/2)

		Operation	TAUDn Status
Restart	During Operation	TAUDnCDRm, TAUDnTRO.TAUDnTROm, TAUDnTME.TAUDnTMEm, and TAUDnTDL.TAUDnTDLm can be changed at any time. TAUDnCNTm and TAUDnRSF.TAUDnRSFm can be read at any time. TAUDnRDT.TAUDnRDTm can be changed during operation.	TAUDnCDRm value of master channel and slave channels 2 to 7 is loaded into TAUDnCNTm to perform count down. TAUDnCDRm value of slave channel 1 is loaded and the counter waits for a master channel interrupt. When the counter of master channel reaches 0000_H: • INTTAUDnIm is generated. • TAUDnCDRm value is reloaded into TAUDnCNTm to continue counting down. • TAUDnCNTm value of slave channel 1 decreases by 1 and the counter waits for the next master channel interrupt. • TAUDnCNTm of slave channels 2, 4, and 6 reloads the TAUDnCDRm value or performs counting in the reverse direction. • When the TAUDnCDRm values of slave channel 2, 4, and 6 are loaded, the TAUDnTME.TAUDnTMEm of slave 2 to 7 are reflected to the TAUDTTOUTm output. • The counter of slave channel 1 waits for the next interrupt from the master channel when reaching 0000_H. When the interrupt is detected: – TAUDnCDRm value is reloaded into TAUDnCNTm and the counter waits for the next master channel interrupt. – INTTAUDnIm is generated. – TAUDnTRO.TAUDnTROm is changeable. • When the counter of slave channels 2, 4, and 6 reaches 0001_H: – INTTAUDnIm is generated. – PWM output of slave channel m is set/reset (when the specified condition of channel output mode is met). – TAUDnCDRm value of slave channels 3, 5, and 7 is loaded into TAUDnCNTm to perform count down. • When the counter of slave channels 3, 5, and 7 reaches 0000_H: – INTTAUDnIm is generated. – PWM output of slave channel m is set/reset (when the specified condition of channel output mode is met). TAUDnTTOUTm of slave channels 2 to 7 outputs a PWM signal, a high-level signal or low-level signal depending on the values of real-time output bit (TAUDnTRO.TAUDnTROm), modulation output bit (TAUDnTME.TAUDnTMEm), and output level bit (TAUDnTDL.TAUDnTDLm) of a pair of slave channels.
	Stop Operation	Set TAUDnTT.TAUDnTTm of master and slave channels to 1 simultaneously. TAUDnTT.TAUDnTTm is a trigger bit, which is automatically cleared to 0.	TAUDnTE.TAUDnTEm is cleared to 0 and the counter stops. TAUDnCNTm and TAUDnTTOUTm stop and retain their current values.

23.14.3.9 Specific Timing Diagrams

The following settings apply to the timing diagram.

- Master channel: INTTAUDnIm is not generated at startup (TAUDnCMORm.TAUDnMD0 = 0).
- Slave channel 1: TAUDnCDRm=0001_H
- Slave channels 2 to 7: Positive logic (TAUDnTOL.TAUDnTOLm = 0)

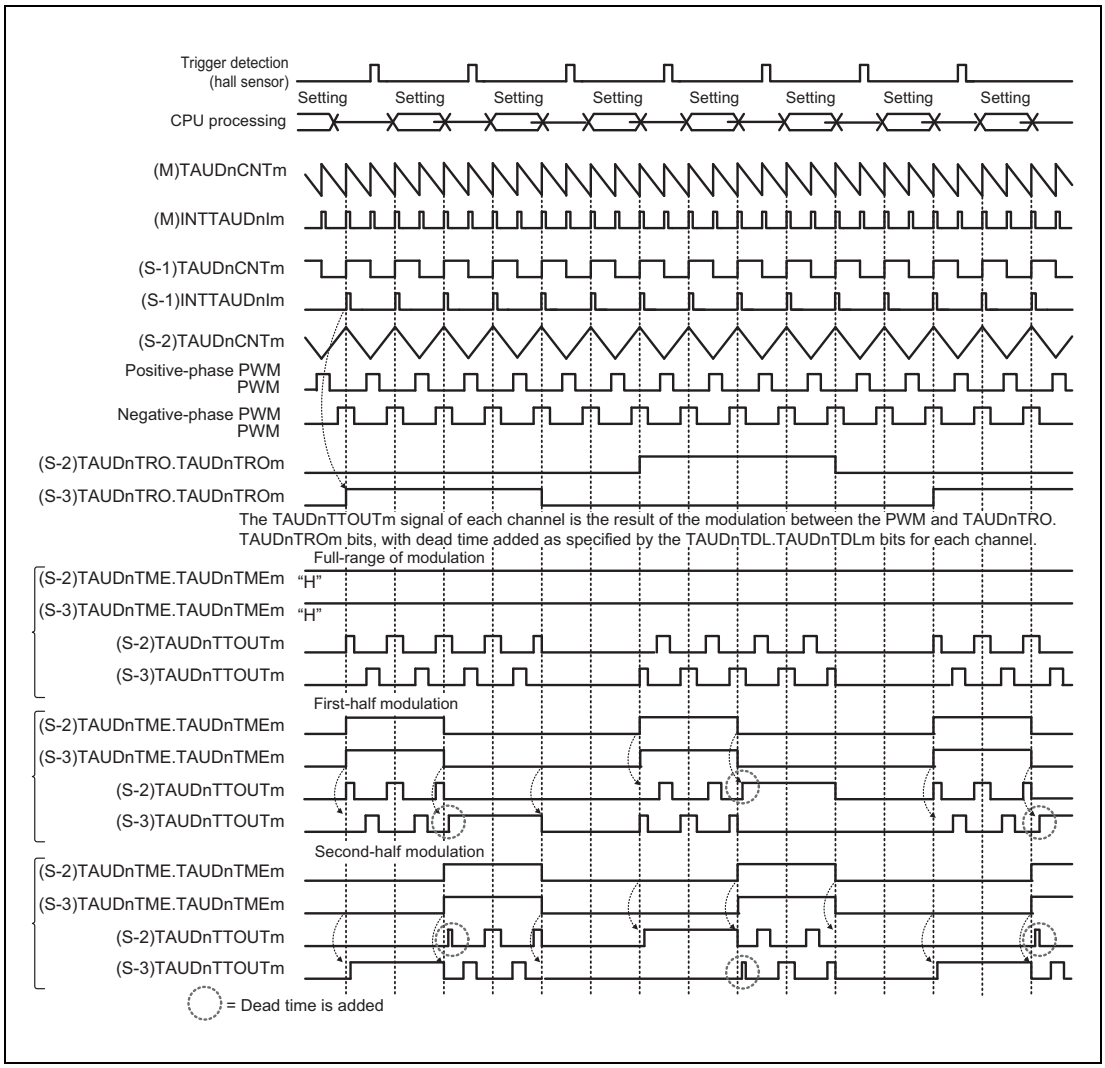

Figure 23.126 Specific Timing Diagram of Complementary Modulation Output Function

The above timing diagram shows how full modulation, first-half modulation, and second-half modulation can be achieved by modifying the TAUDnTME.TAUDnTMEm bits of lower slave channels during operation.

A modulated PWM output signal and TAUDnTRO.TAUDnTROm bit value are output from slave channels 2 and 3. Therefore, a type (normal/reverse phase) of PWM signal to be output from each channel depends on this bit value. Setting values of TAUDnTME.TAUDnTMEm and TAUDnTDL.TAUDnTDLm are reflected at count start timing and upon a carrier period (peak) of a triangular wave PWM.

TAUDnTRO.TAUDnTROm bit value is specified by software, but a new setting is applied only when an interrupt occurs on slave channel 1.

NOTE

Dead time is added to suppress simultaneous change of PWM edges of normal and reverse phases.

The “Setting”symbol indicates a time period when the values of TAUDnCDRm, TAUDnTME.TAUDnTMEm, TAUDnTRO.TAUDnTROm, and TAUDnTDL.TAUDnTDLm can be changed.

Section 24 Timer Array Unit J (TAUJ)

This section contains a generic description of the Timer Array Unit J (TAUJ).

The first part of this section describes all RH850/P1x specific properties, such as the number of units, register base addresses, etc. The remainder of the section describes the functions and registers of the TAUJ.

24.1 Features of RH850/P1x TAUJ

24.1.1 Units

This microcontroller has the following number of TAUJ units.

Table 24.1 Units

Product	RH850/P1x 100 pins	RH850/P1x 144 pins
Number of Units	3	3
Name	TAUJn (n = 0 to 2)	TAUJn (n = 0 to 2)

TAUJn has the following number of channels of timers.

Table 24.2 TAUJn Unit Configurations and Channels

Unit Name (Channel Name) TAUJn	Channels per Unit	RH850/P1x 100 pins (8 ch)	RH850/P1x 144 pins (8 ch)
TAUJ0	4	√	√
TAUJ1	4	√	√
TAUJ2	4	√	√

Table 24.3 Index

Index	Meaning
n	Throughout this section, the individual TAUJ units are identified by the index “n”; for example, TAUJnTOM is the TAUJn channel output mode register.
m	The TAUJ has 4 channels. Throughout this section, the individual channels are identified by the index “m” (m = 0 to 3), thus a certain channel is denoted as CHm. The even numbered channels (m = 0, 2) are denoted as CHm_even. The odd numbered channels (m = 1, 3) are denoted as CHm_odd.

24.1.2 Register Base Address

TAUJn base addresses are listed in the following table.

TAUJn register addresses are given as offsets from the base addresses in general.

Table 24.4 Register Base Address

Base Address Name	Base Address
<TAUJ0_base>	$FFE5\ 0000_H$
<TAUJ1_base>	$FFE5\ 1000_H$
<TAUJ2_base>	$FFE5\ 2000_H$

24.1.3 Clock Supply

Clock supply by and to TAUJn is listed in the following table.

Table 24.5 Clock Supply

Unit Name	Clock for the Unit	Supply Clock Name
TAUJn	PCLK	High-speed peripheral clock CLK_HSB

24.1.4 Interrupt Requests

TAUJn interrupt requests are listed in the following table.

Table 24.6 Interrupt Requests

Unit Interrupt Name	Outline	Interrupt Number	DMA/DTS Trigger Number
TAUJ0			
INTTAUJ0I0	Channel 0 interrupt	133	1
INTTAUJ0I1	Channel 1 interrupt	134	2
INTTAUJ0I2	Channel 2 interrupt	135	3
INTTAUJ0I3	Channel 3 interrupt	136	4
TAUJ1			
INTTAUJ1I0	Channel 0 interrupt	137	5
INTTAUJ1I1	Channel 1 interrupt	138	6
INTTAUJ1I2	Channel 2 interrupt	139	7
INTTAUJ1I3	Channel 3 interrupt	140	8
TAUJ2			
INTTAUJ2I0	Channel 0 interrupt	256	9
INTTAUJ2I1	Channel 1 interrupt	257	10
INTTAUJ2I2	Channel 2 interrupt	258	11
INTTAUJ2I3	Channel 3 interrupt	259	12

24.1.5 Reset Sources

TAUJn reset sources are listed in the following table. TAUJn is initialized by these reset sources.

Table 24.7 Reset Sources

Unit Name	Reset Source
TAUJn	Reset controller SYSRES

24.1.6 External Input/Output Signals

External input/output signals of TAUJn are listed below.

Table 24.8 External Input/Output Signals

Unit Signal Name	Outline	Alternative port pin signal
TAUJ0		
TAUJ0TTIN0 to TAUJ0TTIN3*3	Inputs for channels 0 to 3	TAUJ0I0 to TAUJ0I3
TAUJ0TTOUT0 to TAUJ0TTOUT3	Outputs for channels 0 to 3	TAUJ0O0 to TAUJ0O3
TAUJ1		
TAUJ1TTIN0 to TAUJ1TTIN3*3	Inputs for channels 0 to 3	TAUJ1I0 to TAUJ1I3
TAUJ1TTOUT0 to TAUJ1TTOUT3	Outputs for channels 0 to 3	TAUJ1O0 to TAUJ1O3
TAUJ2		
TAUJ2TTIN0 to TAUJ2TTIN3*1,*3	Inputs for channels 0 to 3	TAUJ0I0 to TAUJ0I3 TAUJ1I0 to TAUJ1I3 TAUJ2I0 to TAUJ2I3
TAUJ2TTOUT0 to TAUJ2TTOUT3	Outputs for channels 0 to 3	TAUJ2O0 to TAUJ2O3

Note 1. The input signal is switched by PIC. For details, see **Section 29.2.2.28, PIMONSEL — Port Input Monitor Select Register**, and **Section 29.2.3.14, Timer Input Monitor Function**.

Note 2. For allocation of available port pins, see **Section 2.2.2, List of Pin Functions**.

Note 3. When channel input pins are to be used, setting the noize filter of port is required. For detals, see **Section 2.6, Noise Filter and Edge Level Detection Circuit**.

24.2 Overview

24.2.1 Functional Overview

The TAUJ has the following functions:

- Independent channel operation function (operated using a single channel)
- Synchronous channel operation function (operated using a master channel and multiple slave channels)

The timer array unit J is used to perform various count or timer operations and to output a signal which depends on the result of the operation. It contains one prescaler block for count clock generation and 4 channels, each equipped with a 32-bit counter TAUJnCNTm and a 32-bit data register TAUJnCDRm to hold the count start value or compare value.

It also contains several control and status registers.

Independent and synchronous operation

Every channel can operate in two operating modes, either independently or in combination with other channels (synchronously), i.e. multiple channels depend on each other with one master and one or more slave channels.

When a channel is operated independently, it can be operated independent of all other channels.

The synchronous operation function is implemented using a combination of channel groups (consisted of master and slave channels).

Several rules apply to the settings of channels.

24.2.2 Terms

In this section, the following terms are used.

Independent channel operation function / synchronous operation channel operation function

TAUJ has 4 channels, and provides an independent channel operation function that individual channels operate independently and a synchronous channel operation function that is implemented using a combination of channels.

- The independent channel operation function can use any channel independent of all other channels.
- The synchronous channel operation function is implemented using a combination of channel groups (comprised of master and slave channels).

Several rules apply to the settings of channels.

Channel group

In the synchronous channel operation function, all channels that depend on each other are referred to as a “channel group”.

A channel group has one master channel and one or more slave channels.

Upper/lower channel

Depending on the channel number m, a channel with a smaller channel number or higher channel number can be referred to as “upper” or “lower” channel:

- Upper channel: Channel with a smaller channel number
- Lower channel: Channel with a larger channel number

For instance, as to channel 2, channel 1 is an upper channel and channel 3 is a lower channel. Channel 0 is the highest channel and channel 3 is the lowest channel.

24.2.3 Timer Operation Functions

This timer provides the following functions by operating individual channels independently or a combination of channels.

Table 24.9 TAUJ Operation Functions

Operation Function	Example
Independent Channel Operation Functions	**Section 24.12**
Interval timer function	**Section 24.12.1**
TAUJnTTINm input interval timer function	**Section 24.12.2**
TAUJnTTINm input pulse interval measurement function	**Section 24.12.3**
TAUJnTTINm input signal width measurement function	**Section 24.12.4**
TAUJnTTINm input position detection function	**Section 24.12.5**
TAUJnTTINm input period count detection function	**Section 24.12.6**
Synchronous Channel Operation Functions	**Section 24.13**
PWM output function	**Section 24.13.1**

24.2.4 TAUJ I/O and Interrupt Request Signals

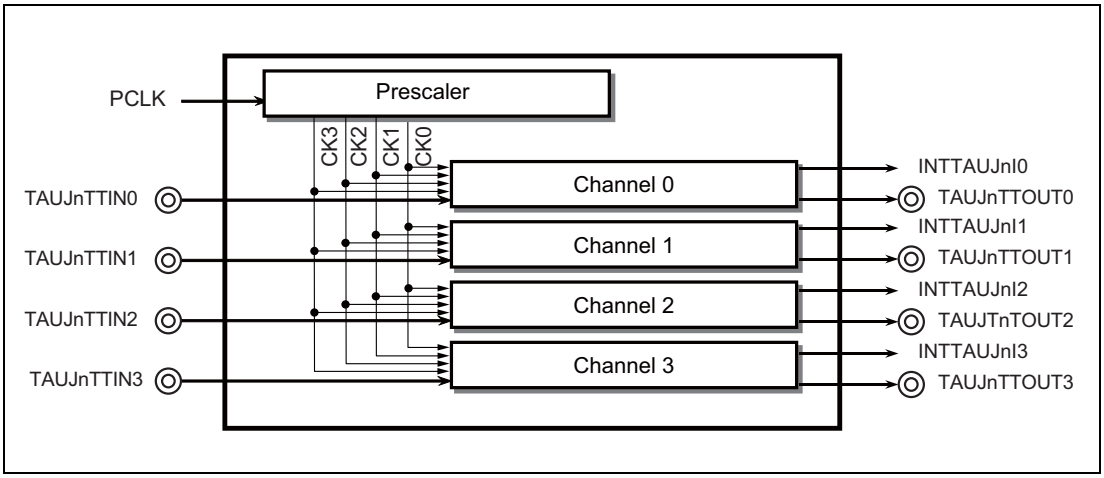

Figure 24.1 TAUJ I/O and Interrupt Request Signals

24.2.5 Block Diagram

The following figure shows the main components of the TAUJ:

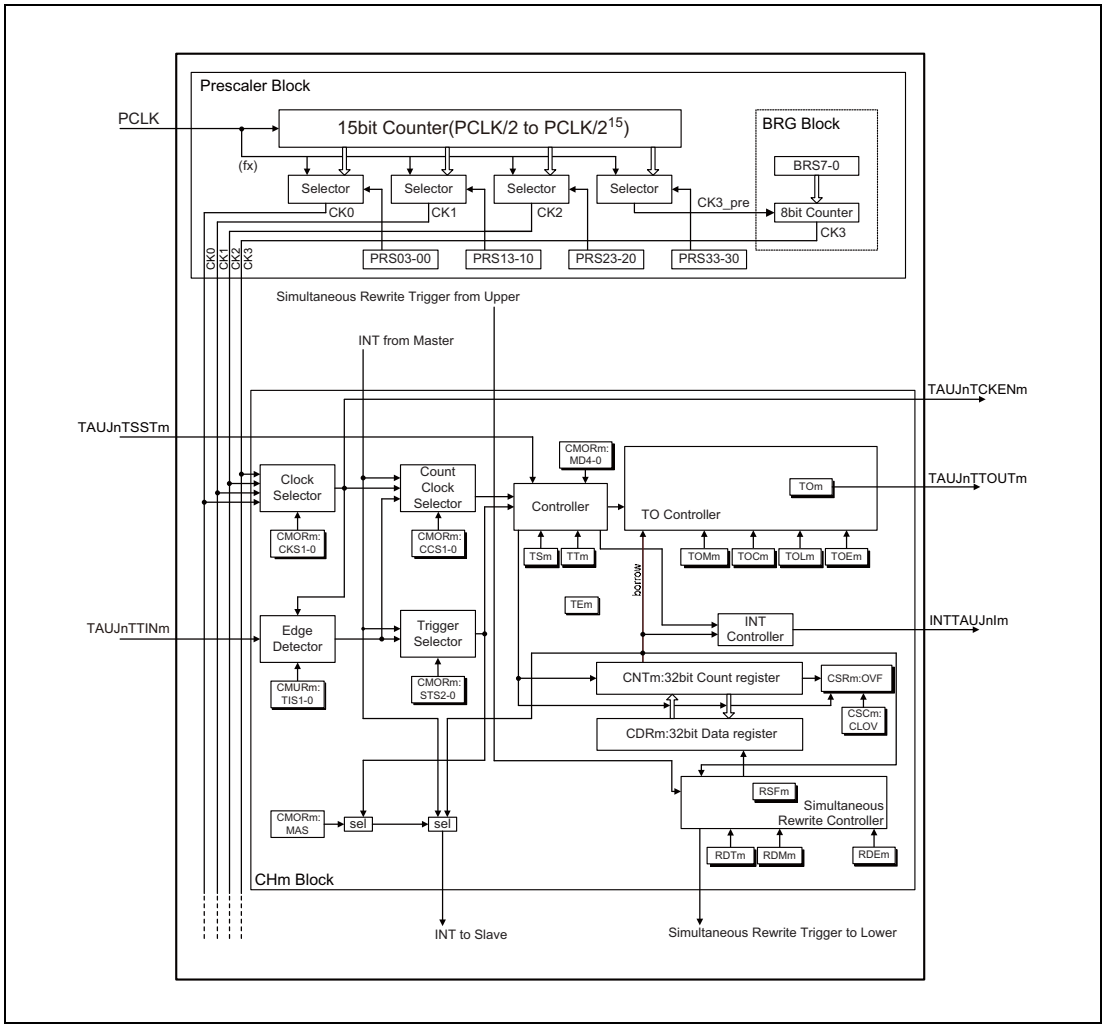

Figure 24.2 Block Diagram of the TAUJ

The prefix “TAUJn” has been omitted from the register names for the sake of clarity in the above figure.

24.2.6 Description of Blocks

The description of blocks is the followings;

Prescaler

The prescaler provides up to 4 clock signals (CK0 to CK3) that can be used as count clocks for all channels.

Prescaler outputs CK0 to CK2 are derived from PCLK by configurable prescaler division factors of 2^0 to 2^{15}. The fourth prescaler output CK3 can be adjusted more precisely by using the BRG to set an additional division factor that is not a power of 2.

Clock and count clock selection

For every channel, the count clock selector selects which of the following is used as the clock source.

- One of the clock outputs CK0 to CK3 (selected by the clock selector)

Controller

The controller controls the main operations of the counter.

- Operating mode
  (selected by the TAUJnCMORm.TAUJnMD[4:0] bits)
- Counter start enable (TAUJnTS.TAUJnTSm) and counter stop (TAUJnTT.TAUJnTTm)

When counter start is enabled, status flag TAUJnTE.TAUJnTEm is set.

Trigger selector

The counter starts automatically when it is enabled (TAUJnTE.TAUJnTEm = 1), or it waits for an external start trigger signal. Any of the following signals can be used as the start trigger.

- Synchronous channel start trigger input TAUJnTSSTm
- Valid edge of TAUJnTTINm input
- INTTAUJnIm from the master channel

Simultaneous rewrite controller

Simultaneous rewrite control is a special function that can be enabled in synchronous operating modes. The data registers of all channels in a channel group (TAUJnCDRm) can be rewritten at any time. The simultaneous rewrite controller ensures that new data register values of all channels become effective at the same time.

TAUJnTO controller

The output control of every channel enables the generation of various output signals such as PWM signals.

24.3 Registers

24.3.1 List of Registers

TAUJ registers are listed in the following table.

For details about <TAUJn_base>, see **Section 24.1.2, Register Base Address**.

Table 24.10 Registers

Module	Register	Symbol	Address
TAUJn prescaler registers			
TAUJn	TAUJn prescaler clock select register	TAUJnTPS	<TAUJn_base> + 90_H
TAUJn	TAUJn prescaler baud rate setting register	TAUJnBRS	<TAUJn_base> + 94_H
TAUJn control registers			
TAUJn	TAUJn channel data register m	TAUJnCDRm	<TAUJn_base> + m × 4_H
TAUJn	TAUJn channel counter register m	TAUJnCNTm	<TAUJn_base> + 10_H + m × 4_H
TAUJn	TAUJn channel mode OS register m	TAUJnCMORm	<TAUJn_base> + 80_H + m × 4_H
TAUJn	TAUJn channel mode user register m	TAUJnCMURm	<TAUJn_base> + 20_H + m × 4_H
TAUJn	TAUJn channel status register m	TAUJnCSRm	<TAUJn_base> + 30_H + m × 4_H
TAUJn	TAUJn channel status clear register m	TAUJnCSCm	<TAUJn_base> + 40_H + m × 4_H
TAUJn	TAUJn channel start trigger register	TAUJnTS	<TAUJn_base> + 54_H
TAUJn	TAUJn channel enable status register	TAUJnTE	<TAUJn_base> + 50_H
TAUJn	TAUJn channel stop trigger register	TAUJnTT	<TAUJn_base> + 58_H
TAUJn output registers			
TAUJn	TAUJn channel output enable register	TAUJnTOE	<TAUJn_base> + 60_H
TAUJn	TAUJn channel output register	TAUJnTO	<TAUJn_base> + $5C_H$
TAUJn	TAUJn channel output mode register	TAUJnTOM	<TAUJn_base> + 98_H
TAUJn	TAUJn channel output configuration register	TAUJnTOC	<TAUJn_base> + $9C_H$
TAUJn	TAUJn channel output active level register	TAUJnTOL	<TAUJn_base> + 64_H
TAUJn reload data registers			
TAUJn	TAUJn channel reload data enable register	TAUJnRDE	<TAUJn_base> + $A0_H$
TAUJn	TAUJn channel reload data mode register	TAUJnRDM	<TAUJn_base> + $A4_H$
TAUJn	TAUJn channel reload data trigger register	TAUJnRDT	<TAUJn_base> + 68_H
TAUJn	TAUJn channel reload status register	TAUJnRSF	<TAUJn_base> + $6C_H$

24.3.2 Details of TAUJn Prescaler Registers

24.3.2.1 TAUJnTPS — TAUJn Prescaler Clock Select Register

This register specifies clocks CK0, CK1, CK2, and CK3_PRE for all channels of the PCLK prescalers. CK3 is generated by dividing CK3_PRE by the factor specified in TAUJnBRS.

Access: Readable/writable in 16-bit units.

Address: <TAUJn_base> + 90_H

Value after reset: $FFFF_H$ This register is initialized by various types of reset.

Bit	15	14	13	12	11	10	9	8	7	6	5	4	3	2	1	0
	TAUJnPRS3[3:0]				TAUJnPRS2[3:0]				TAUJnPRS1[3:0]				TAUJnPRS0[3:0]			
Value after reset	1	1	1	1	1	1	1	1	1	1	1	1	1	1	1	1
R/W	R/W	R/W	R/W	R/W	R/W	R/W	R/W	R/W	R/W	R/W	R/W	R/W	R/W	R/W	R/W	R/W

Table 24.11 TAUJnTPS Register Contents (1/3)

Bit Position	Bit Name	Function
15 to 12	TAUJnPRS3 [3:0]	Specify a CK3_PRE clock. The CK3_PRE clock is the input clock signal for the BRG unit, which supplies prescaler output CK3 to all channels. **TAUJnPRS3[3:0]** — **CK3_PRE clock** 0000_B — $PCLK/2^0$ 0001_B — $PCLK/2^1$ 0010_B — $PCLK/2^2$ 0011_B — $PCLK/2^3$ 0100_B — $PCLK/2^4$ 0101_B — $PCLK/2^5$ 0110_B — $PCLK/2^6$ 0111_B — $PCLK/2^7$ 1000_B — $PCLK/2^8$ 1001_B — $PCLK/2^9$ 1010_B — $PCLK/2^{10}$ 1011_B — $PCLK/2^{11}$ 1100_B — $PCLK/2^{12}$ 1101_B — $PCLK/2^{13}$ 1110_B — $PCLK/2^{14}$ 1111_B — $PCLK/2^{15}$ The above bits are rewritable only when all the counters using CK3 are stopped (TAUJnTE.TAUJnTEm = 0).

Table 24.11 TAUJnTPS Register Contents (2/3)

Bit Position	Bit Name	Function
11 to 8	TAUJnPRS2 [3:0]	Specify the output CK2 clock. TAUJnPRS2[3:0] / CK2 Clock 0000_B PCLK/2^0 0001_B PCLK/2^1 0010_B PCLK/2^2 0011_B PCLK/2^3 0100_B PCLK/2^4 0101_B PCLK/2^5 0110_B PCLK/2^6 0111_B PCLK/2^7 1000_B PCLK/2^8 1001_B PCLK/2^9 1010_B PCLK/2^{10} 1011_B PCLK/2^{11} 1100_B PCLK/2^{12} 1101_B PCLK/2^{13} 1110_B PCLK/2^{14} 1111_B PCLK/2^{15} The above bits are rewritable only when all the counters using CK2 are stopped (TAUJnTE.TAUJnTEm = 0).
7 to 4	TAUJnPRS1 [3:0]	Specify the output CK1 clock. TAUJnPRS1[3:0] / CK1 Clock 0000_B PCLK/2^0 0001_B PCLK/2^1 0010_B PCLK/2^2 0011_B PCLK/2^3 0100_B PCLK/2^4 0101_B PCLK/2^5 0110_B PCLK/2^6 0111_B PCLK/2^7 1000_B PCLK/2^8 1001_B PCLK/2^9 1010_B PCLK/2^{10} 1011_B PCLK/2^{11} 1100_B PCLK/2^{12} 1101_B PCLK/2^{13} 1110_B PCLK/2^{14} 1111_B PCLK/2^{15} The above bits are rewritable only when all the counters using CK1 are stopped (TAUJnTE.TAUJnTEm = 0).

Table 24.11 TAUJnTPS Register Contents (3/3)

Bit Position	Bit Name	Function
3 to 0	TAUJnPRS0 [3:0]	Specify a CK0 clock.

TAUJnPRS0[3:0]	CK0 Clock
0000_B	$PCLK/2^0$
0001_B	$PCLK/2^1$
0010_B	$PCLK/2^2$
0011_B	$PCLK/2^3$
0100_B	$PCLK/2^4$
0101_B	$PCLK/2^5$
0110_B	$PCLK/2^6$
0111_B	$PCLK/2^7$
1000_B	$PCLK/2^8$
1001_B	$PCLK/2^9$
1010_B	$PCLK/2^{10}$
1011_B	$PCLK/2^{11}$
1100_B	$PCLK/2^{12}$
1101_B	$PCLK/2^{13}$
1110_B	$PCLK/2^{14}$
1111_B	$PCLK/2^{15}$

The above bits are rewritable only when all the counters using CK0 are stopped (TAUJnTE.TAUJnTEm = 0).

NOTE

TAUJn clock input PCLK is defined in the first part of this section, **Section 24.1.3, Clock Supply**.

24.3.2.2 TAUJnBRS — TAUJn Prescaler Baud Rate Setting Register

This register specifies the division factor of prescaler clock CK3.

CK3 is generated by dividing CK3_PRE by the factor specified in this register plus one. The PCLK prescaler for CK3_PRE is specified in TAUJnTPS. TAUJnPRS3[3:0].

Access: Readable/writable in 8-bit units.

Address: <TAUJn_base> + 94_H

Value after reset: 00_H This register is initialized by various types of reset.

Bit	7	6	5	4	3	2	1	0
	TAUJnBRS[7:0]							
Value after reset	0	0	0	0	0	0	0	0
R/W	R/W	R/W	R/W	R/W	R/W	R/W	R/W	R/W

Table 24.12 TAUJnBRS Register Contents

Bit Position	Bit Name	Function
7 to 0	TAUJnBRS [7:0]	Specify a CK3_PRE clock division factor for generating CK3.

TAUJnBRS[7:0]	CK3 clock
$0000\ 0000_B$	CK3_PRE / 1
$0000\ 0001_B$	CK3_PRE / 2
$0000\ 0010_B$	CK3_PRE / 3
$0000\ 0011_B$	CK3_PRE / 4
...	...
$1111\ 1110_B$	CK3_PRE / 255
$1111\ 1111_B$	CK3_PRE / 256

24.3.3 Details of TAUJn Control Registers

24.3.3.1 TAUJnCDRm — TAUJn Channel Data Register

This register functions either as a compare register or as a capture register, depending on the operating mode specified in TAUJnCMORm.TAUJnMD[4:1].

Access: Readable/writable in 32-bit units.
- When this register functions as a capture register, only reading is possible. Any write operation is ignored.
- When this register functions as a compare register, reading and writing is possible.

Address: <TAUJn_base> + 0_H + m × 4_H

Value after reset: $0000\ 0000_H$ This register is initialized by various types of reset.

Bit	31	30	29	28	27	26	25	24	23	22	21	20	19	18	17	16
	TAUJnCDR[31:16]															
Value after reset	0	0	0	0	0	0	0	0	0	0	0	0	0	0	0	0
R/W	R/W	R/W	R/W	R/W	R/W	R/W	R/W	R/W	R/W	R/W	R/W	R/W	R/W	R/W	R/W	R/W

Bit	15	14	13	12	11	10	9	8	7	6	5	4	3	2	1	0
	TAUJnCDR[15:0]															
Value after reset	0	0	0	0	0	0	0	0	0	0	0	0	0	0	0	0
R/W	R/W	R/W	R/W	R/W	R/W	R/W	R/W	R/W	R/W	R/W	R/W	R/W	R/W	R/W	R/W	R/W

Table 24.13 TAUJnCDRm Register Contents

Bit Position	Bit Name	Function
31 to 0	TAUJnCDR [31:0]	Data register for capture/compare values

24.3.3.2 TAUJnCNTm — TAUJn Channel Counter Register

This is a channel m counter register.

Access: Only readable in 32-bit units.

Address: <TAUJn_base> + 10_H + m × 4_H

Value after reset: FFFF $FFFF_H$ This register is initialized by various types of reset.

Bit	31	30	29	28	27	26	25	24	23	22	21	20	19	18	17	16
	TAUJnCNT[31:16]															
Value after reset	1	1	1	1	1	1	1	1	1	1	1	1	1	1	1	1
R/W	R	R	R	R	R	R	R	R	R	R	R	R	R	R	R	R

Bit	15	14	13	12	11	10	9	8	7	6	5	4	3	2	1	0
	TAUJnCNT[15:0]															
Value after reset	1	1	1	1	1	1	1	1	1	1	1	1	1	1	1	1
R/W	R	R	R	R	R	R	R	R	R	R	R	R	R	R	R	R

Table 24.14 TAUJnCNTm Register Contents

Bit Position	Bit Name	Function
31 to 0	TAUJnCNT [31:0]	32-bit counter value

The read value depends on a counter, an operating mode change, or TAUJnTS.TAUJnTSm/ TAUJnTT.TAUJnTTm bit value.

The initial counter read value depends on the operating mode and how the counter is stopped.

- By a reset
- By a counter stop trigger (TAUJnTT.TAUJnTTm = 1)

The following table lists the initial counter read values after the counter is stopped (TAUJnTE.TAUJnTEm = 0) and re-enabled (TAUJnTS.TAUJnTSm = 1).

The table also contains the counter read value one count after the counter is enabled (TAUJnTS.TAUJnTSm = 1) with the counter waiting for a start trigger.

Table 24.15 TAUJnCNTm Read Values after Re-Enabling Counter

Mode Name	Count Method (Up/Down)	TAUJnCNTm		
		Start Value*1	After Stop Trigger	After One Count
Interval timer mode	Count down	$FFFF\ FFFF_H$	Stop value	—
Capture mode	Count up	$0000\ 0000_H$	Stop value	—
One-count mode	Count down	$FFFF\ FFFF_H$	Stop value	Stop value
Capture and one-count mode	Count up	$0000\ 0000_H$	Stop value	Capture value + 1 (TAUJnCDRm)
Count capture mode	Count up	$0000\ 0000_H$	Stop value	—
Capture and gate count mode	Count up	$0000\ 0000_H$	Stop value	Stop value

Note 1. The value set in the TAUJnCNTm when operation modes are changed after reset release.

24.3.3.3 TAUJnCMORm — TAUJn Channel Mode OS Register

This register controls channel m operation.

Access: Readable/writable in 16-bit units. Writable only when the counter is stopped (TAUJnTE.TAUJnTEm = 0).

Address: <TAUJn_base> + 80_H + m × 4_H

Value after reset: 0000_H This register is initialized by various types of reset.

Bit	15	14	13	12	11	10	9	8	7	6	5	4	3	2	1	0
	TAUJnCKS[1:0]		TAUJnCCS[1:0]		TAUJn MAS	TAUJnSTS[2:0]			TAUJnCOS[1:0]		—	TAUJnMD[4:0]				
Value after reset	0	0	0	0	0	0	0	0	0	0	0	0	0	0	0	0
R/W	R/W	R/W	R/W	R/W	R/W	R/W	R/W	R/W	R/W	R/W	R	R/W	R/W	R/W	R/W	R/W

Table 24.16 TAUJnCMORm Register Contents (1/3)

Bit Position	Bit Name	Function
15, 14	TAUJnCKS[1:0]	Selects the operating clock for use with the TAUJnTTINm input edge detection circuit. According to the setting of the TAUJnCMORm.TAUJnCCS[1:0] bits, this can also be used as the clock to drive counting by TAUJnCNTm. **TAUJn CKS1 / TAUJn CKS0 / Selection of Operating Clock** 0 0 CK0 0 1 CK1 1 0 CK2 1 1 CK3
13, 12	TAUJnCCS[1:0]	Selects a count clock for TAUJnCNTm counter. **TAUJn CCS1 / TAUJn CCS0 / Selection of Operating Clock** 0 0 Operating clock specified by TAUJnCMORm.TAUJnCKS[1:0]. 0 1 Setting prohibited 1 0 1 1
11	TAUJnMAS	Specifies whether the channel is a master or slave channel during synchronous channel operation. 0: Slave 1: Master This bit setting is valid only for even channels (CHm_even). Odd channels (CHm-odd) are fixed to 0.

Table 24.16 TAUJnCMORm Register Contents (2/3)

Bit Position	Bit Name	Function
10 to 8	TAUJnSTS[2:0]	Selects an external start trigger.

TAUJn STS2	TAUJnS TS1	TAUJn STS0	Functional Description
0	0	0	Software trigger
0	0	1	Valid edge of TAUJnTTINm input signal, which is specified by TAUJnCMURm.TAUJnTIS[1:0].
0	1	0	Valid edge of TAUJnTTINm input signal is used as a start trigger and the reverse edge as a stop trigger.
0	1	1	Setting prohibited
1	0	0	INT of master channel
1	0	1	Setting prohibited
1	1	0	
1	1	1	

7, 6	TAUJnCOS[1:0]	Specify the timing for updating capture register TAUJnCDRm and overflow flag TAUJnCSRm. TAUJnOVF of channel m.These bits are valid only when channel m is in capture function (capture mode or capture & one-count mode).

TAUJn COS1	TAUJn COS0	TAUJnCDRm	TAUJnCSRm.TAUJnOVF
0	0	Updated when valid edge of TAUJnTTINm input is detected.	Updated (cleared or set) when valid edge of TAUJnTTINm input is detected: • Set TAUJnCSRm. TAUJnOVF if a counter overflow has occurred since the last valid edge was detected. • Clear TAUJnCSRm. TAUJnOVF if no counter overflow has occurred since the last valid edge was detected.
0	1		Set when a counter overflow occurs and cleared by setting TAUJnCSCm.TAUJnCLOV to 1.
1	0	Updated when valid edge of TAUJnTTINm input is detected and when a counter overflow occurs. • Detection of valid edge of TAUJnTTINm input: The counter value is written into TAUJnCDRm. • Occurrence of overflow: FFFF $FFFF_H$ is loaded into TAUJnCDRm. Detection of the next valid edge of TAUJnTTINm is ignored.	No setting
1	1		Set when a counter overflow occurs and cleared by setting TAUJnCSCm.TAUJnCLOV to 1.

5	Reserved	When read, the value after reset is read. When writing, write the value after reset.

Table 24.16 TAUJnCMORm Register Contents (3/3)

Bit Position	Bit Name	Function
4 to 0	TAUJnMD[4:0]	Specify an operating mode.

TAUJn MD4	TAUJn MD3	TAUJn MD2	TAUJn MD1	TAUJn MD0	Functional Description
0	0	0	0	1/0	Interval timer mode
0	0	0	1	1/0	Setting prohibited
0	0	1	0	1/0	Capture mode
0	0	1	1	1/0	Setting prohibited
0	1	0	0	1/0	One-count mode
0	1	0	1	1/0	Setting prohibited
0	1	1	0	1/0	Capture and one-count mode
0	1	1	1	1/0	Setting prohibited
1	0	0	0		
1	0	0	1		
1	0	1	0		
1	0	1	1	1/0	Count capture mode
1	1	0	0	0	Setting prohibited
1	1	0	1	0	Capture and gate count mode

Mode	Role of TAUJnMD0 Bit
Interval timer mode Capture mode Count capture mode	Specifies whether INTTAUJnIm is output at the beginning of count operation (when a start trigger is entered) or not. 0: INTTAUJnIm is not output. 1: INTTAUJnIm is output.
One-count mode	Enables/disables start trigger detection during counting. 0: Disables detection. 1: Enables detection. **CAUTION** In one-count mode, the INTTAUJnIm input signal is not output when the counter starts.
Capture and one-count mode Capture and gate count mode	Set this bit to 0. **CAUTION** The INTTAUDnIm input signal is not output when the counter starts. The start trigger detected during count operation is disabled.

24.3.3.4 TAUJnCMURm — TAUJn Channel Mode User Register

This register specifies a type of valid edge detection used for TAUJnTTINm input.

Access: Readable/writable in 8-bit units.

Address: <TAUJn_base> + 20_H + m × 4_H

Value after reset: 00_H This register is initialized by various types of reset.

Bit	7	6	5	4	3	2	1	0
	—	—	—	—	—	—	TAUJnTIS[1:0]	
Value after reset	0	0	0	0	0	0	0	0
R/W	R	R	R	R	R	R	R/W	R/W

Table 24.17 TAUJnCMURm Register Contents

Bit Position	Bit Name	Function
7 to 2	Reserved	When read, the value after reset is read. When writing, write the value after reset.
1, 0	TAUJnTIS[1:0]	Specify a valid edge of TAUJnTTINm input signal.

TAUJn TIS1	TAUJn TIS0	Functional Description
0	0	Falling edge
0	1	Rising edge
1	0	Detection of falling and rising edges (selection of low width measurement) Start trigger: Falling edge Stop trigger (capture): Rising edge
1	1	Detection of falling and rising edges (selection of high width measurement) Start trigger: Rising edge Stop trigger (capture): Falling edge

Edge detection of TAUJnTTINm input signal is based on the operating clock selected by TAUJnCMORm.TAUJnCKS[1:0].

24.3.3.5 TAUJnCSRm — TAUJn Channel Status Register

This register indicates the overflow status of channel m.

Access: Only readable in 8-bit units.

Address: <TAUJn_base> + 30_H + m × 4_H

Value after reset: 00_H This register is initialized by various types of reset.

Bit	7	6	5	4	3	2	1	0
	—	—	—	—	—	—	—	TAUJnOVF
Value after reset	0	0	0	0	0	0	0	0
R/W	R	R	R	R	R	R	R	R

Table 24.18 TAUJnCSRm Register Contents

Bit Position	Bit Name	Function
7 to 2	Reserved	When read, the value after reset is read.
1	Reserved	When read, an undefined value is read.
0	TAUJnOVF	Indicates the counter overflow status: 0: No overflow occurs 1: Overflow occurs This bit is used only in the following modes: • Capture mode • Capture and one-count mode The function of this bit depends on the setting of control bits TAUJnCMORm.TAUJnCOS[1:0].

24.3.3.6 TAUJnCSCm — TAUJn Channel Status Clear Register

This register is a trigger register for clearing the overflow flag TAUJnCSRm.TAUJnOVF of channel m.

Access: Only writable in 8-bit units. The read value is always 00_H.

Address: <TAUJn_base> + 40_H + m × 4_H

Value after reset: 00_H This register is initialized by various types of reset.

Bit	7	6	5	4	3	2	1	0
	—	—	—	—	—	—	—	TAUJnCLOV
Value after reset	0	0	0	0	0	0	0	0
R/W	R	R	R	R	R	R	R	W

Table 24.19 TAUJnCSCm Register Contents

Bit Position	Bit Name	Function
7 to 1	Reserved	When writing, write the value after reset.
0	TAUJnCLOV	0: No effect (Setting 0 does not affect the overflow flag TAUJnCSRm.TAUJnOVF bit.) 1: Clears the overflow flag TAUJnCSRm.TAUJnOVF

24.3.3.7 TAUJnTS — TAUJn Channel Start Trigger Register

This register enables the counter operation for each channel.

Access: Only writable in 8-bit units. The read value is always 00_H.

Address: <TAUJn_base> + 54_H

Value after reset: 00_H

Bit	7	6	5	4	3	2	1	0
	—	—	—	—	TAUJnTS03	TAUJnTS02	TAUJnTS01	TAUJnTS00
Value after reset	0	0	0	0	0	0	0	0
R/W	R	R	R	R	W	W	W	W

Table 24.20 TAUJnTS Register Contents

Bit Position	Bit Name	Function
7 to 4	Reserved	When writing, write the value after reset.
3 to 0	TAUJnTSm	Enables the counter operation for channel m: 0: No effect (Setting 0 does not enable the counter operation of channel m.) 1: Enables the counter operation and sets TAUJnTE.TAUJnTEm = 1 Only the counter operation is enabled even if TAUJnTE.TAUJnTEm = 1. Whether the counter is started or not depends on the selected of operating mode.

24.3.3.8 TAUJnTE — TAUJn Channel Enable Status Register

This register enables/disables a counter operation.

Access: Only readable in 8-bit units.

Address: <TAUJn_base> + 50_H

Value after reset: 00_H This register is initialized by various types of reset.

Bit	7	6	5	4	3	2	1	0
	—	—	—	—	TAUJnTE03	TAUJnTE02	TAUJnTE01	TAUJnTE00
Value after reset	0	0	0	0	0	0	0	0
R/W	R	R	R	R	R	R	R	R

Table 24.21 TAUJnTE Register Contents

Bit Position	Bit Name	Function
7 to 4	Reserved	When read, the value after reset is read.
3 to 0	TAUJnTEm	Enables/disables channel m's counter operation. 0: Disables the counter operation 1: Enables the counter operation These bits are set to 1 when trigger input of TAUJnTSSTm (synchronous channel start trigger signal) is detected or when TAUJnTS.TAUJnTSm is set to 1. These bits are set to 0 when TAUJnTT.TAUJnTTm is set to 1.

24.3.3.9 TAUJnTT — TAUJn Channel Stop Trigger Register

This register stops the counter operation of each channel.

Access: Only writable in 8-bit units. The read value is always 00_H.

Address: <TAUJn_base> + 58_H

Value after reset: 00_H

Bit	7	6	5	4	3	2	1	0
	—	—	—	—	TAUJnTT03	TAUJnTT02	TAUJnTT01	TAUJnTT00
Value after reset	0	0	0	0	0	0	0	0
R/W	R	R	R	R	W	W	W	W

Table 24.22 TAUJnTT Register Contents

Bit Position	Bit Name	Function
7 to 4	Reserved	When writing, write the value after reset.
3 to 0	TAUJnTTm	Stops channel m's counter operation. 0: No effect (Setting 0 does not enable the counter operation of channel m.) 1: Stops the counter operation and resets TAUJnTE.TAUJnTEm TAUJnCNTm, TAUJnTO.TAUJnTOm, and TAUJnTTOUTm retain the values provided before the counter is stopped.

24.3.4 TAUJn Simultaneous Rewrite Register Details

24.3.4.1 TAUJnRDE — TAUJn Channel Reload Data Enable Register

This register enables and disables simultaneous rewrite of the data register TAUJnCDRm. It also enables and disables simultaneous rewrite of the data register TAUJnTOL.TAUJnTOLm for the PWM output function.

Access: This register can be read/written in 8-bit units. It can only be written when the counter is stopped (TAUJnTE.TAUJnTEm = 0).

Address: <TAUJn_base> + $A0_H$

Value after reset: 00_H This register is initialized by various types of reset.

Bit	7	6	5	4	3	2	1	0
	—	—	—	—	TAUJnRDE03	TAUJnRDE02	TAUJnRDE01	TAUJnRDE00
Value after reset	0	0	0	0	0	0	0	0
R/W	R	R	R	R	R/W	R/W	R/W	R/W

Table 24.23 TAUJnRDE Register Contents

Bit Position	Bit Name	Function
7 to 4	Reserved	When read, the value after reset is read. When writing, write the value after reset.
3 to 0	TAUJnRDEm	Enables/disables simultaneous rewrite of the data register of channel m: 0: Disables simultaneous rewrite 1: Enabled simultaneous rewrite

24.3.4.2 TAUJnRDM — TAUJn Channel Reload Data Mode Register

This register selects when the signal that controls simultaneous rewrite is generated.

Access: This register can be read/written in 8-bit units. It can only be written when the counter is stopped (TAUJnTE.TAUJnTEm = 0).

Address: <TAUJn_base> + $A4_H$

Value after reset: 00_H This register is initialized by various types of reset.

Bit	7	6	5	4	3	2	1	0
	—	—	—	—	TAUJnRDM03	TAUJnRDM02	TAUJnRDM01	TAUJnRDM00
Value after reset	0	0	0	0	0	0	0	0
R/W	R	R	R	R	R/W	R/W	R/W	R/W

Table 24.24 TAUJnRDM Register Contents

Bit Position	Bit Name	Function
7 to 4	Reserved	When read, the value after reset is read. When writing, write the value after reset.
3 to 0	TAUJnRDMm	Specify when the signal that triggers simultaneous rewrite is generated: 0: When the master channel counter starts counting 1: Setting prohibited These bits only apply when TAUJnRDE.TAUJnRDEm = 1.

24.3.4.3 TAUJnRDT — TAUJn Channel Reload Data Trigger Register

This register triggers the simultaneous rewrite enable state.

Access: This register can only be written in 8-bit unit. It is always read as 00_H.

Address: <TAUJn_base> + 68_H

Value after reset: 00_H This register is initialized by any reset source.

Bit	7	6	5	4	3	2	1	0
	—	—	—	—	TAUJnRDT03	TAUJnRDT02	TAUJnRDT01	TAUJnRDT00
Value after reset	0	0	0	0	0	0	0	0
R/W	R	R	R	R	W	W	W	W

Table 24.25 TAUJnRDT Register Contents

Bit Position	Bit Name	Function
7 to 4	Reserved	When writing, write the value after reset.
3 to 0	TAUJnRDTm	Triggers the simultaneous rewrite enable state: 0: No effect (Setting 0 does not trigger the simultaneous rewrite enable state.) 1: Simultaneous rewrite enable state is triggered. The simultaneous rewrite enable flag (TAUJnRSF.TAUJnRSFm) is set to 1. The system waits for the simultaneous rewrite trigger. These bits only apply when TAUJnRDE.TAUJnRDEm = 1.

24.3.4.4 TAUJnRSF — TAUJn Channel Reload Status Register

This flag register indicates the simultaneous rewrite status.

Access: This register can only be read in 8-bit units.

Address: <TAUJn_base> + $6C_H$

Value after reset: 00_H This register is initialized by any reset source.

Bit	7	6	5	4	3	2	1	0
	—	—	—	—	TAUJnRSF03	TAUJnRSF02	TAUJnRSF01	TAUJnRSF00
Value after reset	0	0	0	0	0	0	0	0
R/W	R	R	R	R	R	R	R	R

Table 24.26 TAUJnRSF Register Contents

Bit Position	Bit Name	Function
7 to 4	Reserved	When read, the value after reset is read.
3 to 0	TAUJnRSFm	Indicates the simultaneous rewrite status: 0: Indicates that the simultaneous rewrite is complete by the generation of the simultaneous rewrite trigger. 1: Indicates a trigger waiting state in the simultaneous rewrite enable state (TAUJnRDT.TAUJnRDTm = 1).

24.3.5 TAUJn Output Registers Details

24.3.5.1 TAUJnTOE — TAUJn Channel Output Enable Register

This register enables and disables Independent Channel Output Mode Controlled by Software.

Access: This register can be read/written in 8-bit units.

Address: <TAUJn_base> + 60_H

Value after reset: 00_H This register is initialized by various types of reset.

Bit	7	6	5	4	3	2	1	0
	—	—	—	—	TAUJnTOE03	TAUJnTOE02	TAUJnTOE01	TAUJnTOE00
Value after reset	0	0	0	0	0	0	0	0
R/W	R	R	R	R	R/W	R/W	R/W	R/W

Table 24.27 TAUJnTOE Register Contents

Bit Position	Bit Name	Function
7 to 4	Reserved	When read, the value after reset is read. When writing, write the value after reset.
3 to 0	TAUJnTOEm	Enables/disables Independent Channel Output Mode: 0: Disables Independent Timer Output Function (by software) 1: Enables Independent Timer Output Function

24.3.5.2 TAUJnTO — TAUJn Channel Output Register

This register specifies and reads the level of TAUJnTTOUTm.

Access: This register can be read/written in 8-bit units.

Address: <TAUJn_base> + $5C_H$

Value after reset: 00_H This register is initialized by various types of reset.

Bit	7	6	5	4	3	2	1	0
	—	—	—	—	TAUJnTO03	TAUJnTO02	TAUJnTO01	TAUJnTO00
Value after reset	0	0	0	0	0	0	0	0
R/W	R	R	R	R	R/W	R/W	R/W	R/W

Table 24.28 TAUJnTO Register Contents

Bit Position	Bit Name	Function
7 to 4	Reserved	When read, the value after reset is read. When writing, write the value after reset.
3 to 0	TAUJnTOm	Specifies/reads the level of TAUJnTTOUTm: 0: Low 1: High Only TAUJnTO.TAUJnTOm bits for which the independent channel output function is disabled (TAUJnTOE.TAUJnTOEm = 0) can be written.

24.3.5.3 TAUJnTOM — TAUJn Channel Output Mode Register

This register specifies the output mode of each channel.

Access: This register can be read/written in 8-bit units. It can only be written when the counter is stopped (TAUJnTE.TAUJnTEm = 0).

Address: <TAUJn_base> + 98_H

Value after reset: 00_H This register is initialized by various types of reset.

Bit	7	6	5	4	3	2	1	0
	—	—	—	—	TAUJnTOM03	TAUJnTOM02	TAUJnTOM01	TAUJnTOM00
Value after reset	0	0	0	0	0	0	0	0
R/W	R	R	R	R	R/W	R/W	R/W	R/W

Table 24.29 TAUJnTOM Register Contents

Bit Position	Bit Name	Function
7 to 4	Reserved	When read, the value after reset is read. When writing, write the value after reset.
3 to 0	TAUJnTOMm	Specify the output mode: 0: Independent channel output mode 1: Synchronous channel output mode The output mode depends on several channel output control bit TAUJnTOE.TAUJnTOEm setting.

24.3.5.4 TAUJnTOC — TAUJn Channel Output Configuration Register

This register specifies the output mode of each channel in combination with TAUJnTOM.TAUJnTOMm.

Access: This register can be read/written in 8-bit units. It can only be written when the counter is stopped (TAUJnTE.TAUJnTEm = 0).

Address: <TAUJn_base> + $9C_H$

Value after reset: 00_H This register is initialized by various types of reset.

Bit	7	6	5	4	3	2	1	0
	—	—	—	—	TAUJnTOC03	TAUJnTOC02	TAUJnTOC01	TAUJnTOC00
Value after reset	0	0	0	0	0	0	0	0
R/W	R	R	R	R	R/W	R/W	R/W	R/W

Table 24.30 TAUJnTOC Register Contents

Bit Position	Bit Name	Function
7 to 4	Reserved	When read, the value after reset is read. When writing, write the value after reset.
3 to 0	TAUJnTOCm	Specify the output mode: 0: Operation mode 1 (= Toggle mode) 1: Setting prohibited These bits must always be set 0 in all output modes except the independent channel output mode controlled by software. The output mode depends on the setting of TAUJnTOM.TAUJnTOMm as shown in the table below.

TAUJn TOMm	TAUJn TOCm	Function
0	0	Toggle mode: Toggling proceeds when INTTAUJnIm is generated.
0	1	Setting prohibited
1	0	Synchronous channel operation mode: set when INT is generated on the master channel and reset when INT is generated on the slave channel.
1	1	Setting prohibited

24.3.5.5 TAUJnTOL — TAUJn Channel Output Active Level Register

This register specifies the output logic of the channel output bit (TAUJnTO.TAUJnTOm).

Access: This register can be read/written in 8-bit units.

Address: <TAUJn_base> + 64_H

Value after reset: 00_H This register is initialized by various types of reset.

Bit	7	6	5	4	3	2	1	0
	—	—	—	—	TAUJnTOL03	TAUJnTOL02	TAUJnTOL01	TAUJnTOL00
Value after reset	0	0	0	0	0	0	0	0
R/W	R	R	R	R	R/W	R/W	R/W	R/W

Table 24.31 TAUJnTOL Register Contents

Bit Position	Bit Name	Function
7 to 4	Reserved	When read, the value after reset is read. When writing, write the value after reset.
3 to 0	TAUJnTOLm	Specify the output logic of the channel m output bit (TAUJnTO.TAUJnTOm): 0: Positive logic (active high) 1: Negative logic (active low)

24.4 Operating Procedure

The following lists the general operation procedure for the TAUJn:

After reset release, the operation of each channel is stopped. Clock supply is started and writing to each register is enabled. All circuits and registers of all channels are initialized. The control register of TAUJnTTOUTm is also initialized and outputs a low level.

1. Set the TAUJnTPS and TAUJnBRS registers to specify the clock frequency of CK0 to CK3.
2. Configure the desired TAUJn function:
   - Set the operation mode
   - Set the channel output mode
   - Set any other control bits
3. Enable the counter by setting the TAUJnTS.TAUJnTSm bit to 1.
   The counter starts to count immediately, or when an appropriate trigger is detected, depending on the bit settings.
4. If desired, and if possible for the configured function, stop the counter or perform a forced restart operation during count operation. The counter can be stopped by setting the TAUJnTT.TAUJnTTm bit to 1. The counter can be forcibly restarted by setting the TAUJnTS.TAUJnTSm bit to 1.
5. Stop the function by setting the TAUJnTT.TAUJnTTm bit to 1.

NOTES

1. A detailed description of the required control bits and the operation of the individual functions is given in the following sections:
   - **Section 24.12, Independent Channel Operation Functions**
   - **Section 24.13, Synchronous Channel Operation Functions**
2. Modify the function while the counter is stopped (TAUJnTE.TAUJnTEm = 0).

24.5 Concepts of Synchronous Channel Operation

The synchronous channel operation depends on multiple channels and is affected by other channels. Therefore, several rules apply to the synchronous channel operation.

These rules are detailed in **Section 24.5.1, Rules of Synchronous Channel Operation**.

Two special features for the synchronous channel operation function are detailed in the following sections:

- **Section 24.5.2, Simultaneous Start and Stop of Synchronous Channel Counters**
- **Section 24.6, Simultaneous Rewrite**

24.5.1 Rules of Synchronous Channel Operation

Number of master and slave channels

- Only even channels (CH0, CH2) can be set as master channels. Any channel apart from CH0 can be set as a slave channel.
- Only channels lower than the master channel can be set as slave channels, and several slave channels can be set for one master channel.
  Example: If CH2 is a master channel, CH3 can be set as slave channel.
- If two master channels are used, slave channels cannot cross the master.
  Example: If CH0 and CH2 are master channels, CH1 can be set as slave channels for CH0, but CH3 cannot.

Operating clock

- The same operating clock should be set for the master channel and the slave channels synchronizing to the master channel. This is achieved by setting the same value in the TAUJnCMORm.TAUJnCKS[1:0] bits of the master and slave channels.

The basic concepts of master/slave usage and operating clocks are illustrated in **Figure 24.3**.

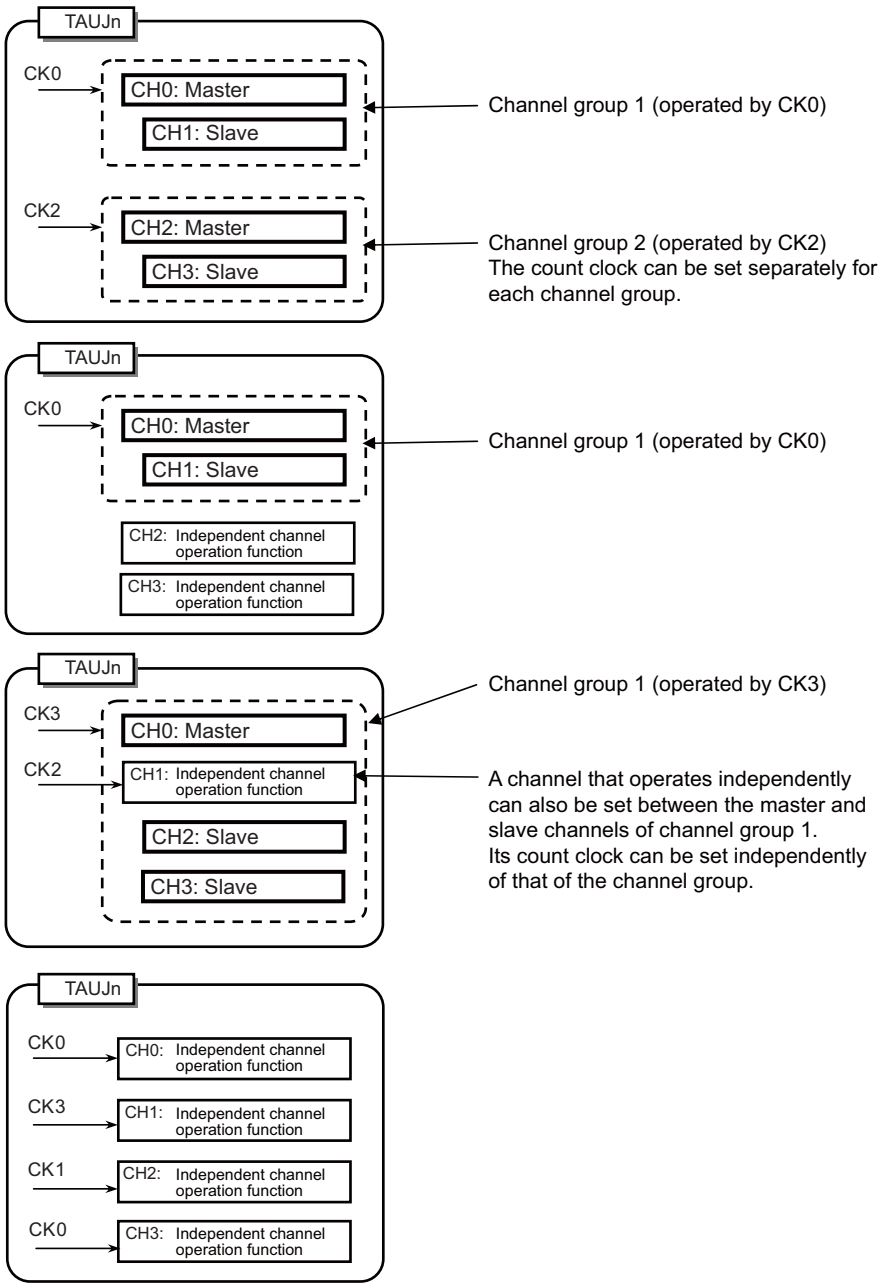

Figure 24.3 Grouping of Channels and Assignment of Count Clocks

24.5.2 Simultaneous Start and Stop of Synchronous Channel Counters

Channels that are operated synchronously can be started and stopped simultaneously, both within a TAUJ unit and between TAUJ units.

24.5.2.1 Simultaneous Start and Stop within a TAUJ Unit

- To simultaneously start synchronized channels, the TAUJnTS.TAUJnTSm bits of the channels should be set at the same time.
- To simultaneously stop synchronized channels, the TAUJnTT.TAUJnTTm bits of the channels should be set at the same time.

Setting 1 in the TAUJnTS.TAUJnTSm bits sets the corresponding TAUJnTE.TAUJnTEm bits to 1, enabling counting. The count start timing of the counter depends on the operating mode.

24.5.2.2 Simultaneous Start between TAUJ Units

Counters in different TAUJ units can also be started simultaneously if the corresponding counters are enabled before receiving the simultaneous trigger signal.

24.6 Simultaneous Rewrite

24.6.1 Functional Overview

Simultaneous rewrite describes the ability to change the compare/start value and the output logic of multiple channels at the same time.

The corresponding data and control registers (TAUJnCDRm and TAUJnTOL) can nevertheless be written at any time. The new value does not affect the counter operation or the output signal until simultaneous rewrite is triggered.

Simultaneous rewrite can be triggered when the counter on the master channel reaching a certain value.

Table 24.32 lists the simultaneous rewrite method (TAUJnRDM.TAUJnRDMm = 0).

Table 24.32 Simultaneous Rewrite Method

Method	Simultaneous Rewrite Triggered Timing	TAUJnRDE.TAUJnRDEm
—	No simultaneous rewrite	0
A	The master channel (re)starts counting	1

24.6.2 How to Control Simultaneous Rewrite

The following figure shows the general procedure for simultaneous rewrite. The three main blocks (Initial settings, Start counter & count operation, and Simultaneous rewrite) are explained afterwards.

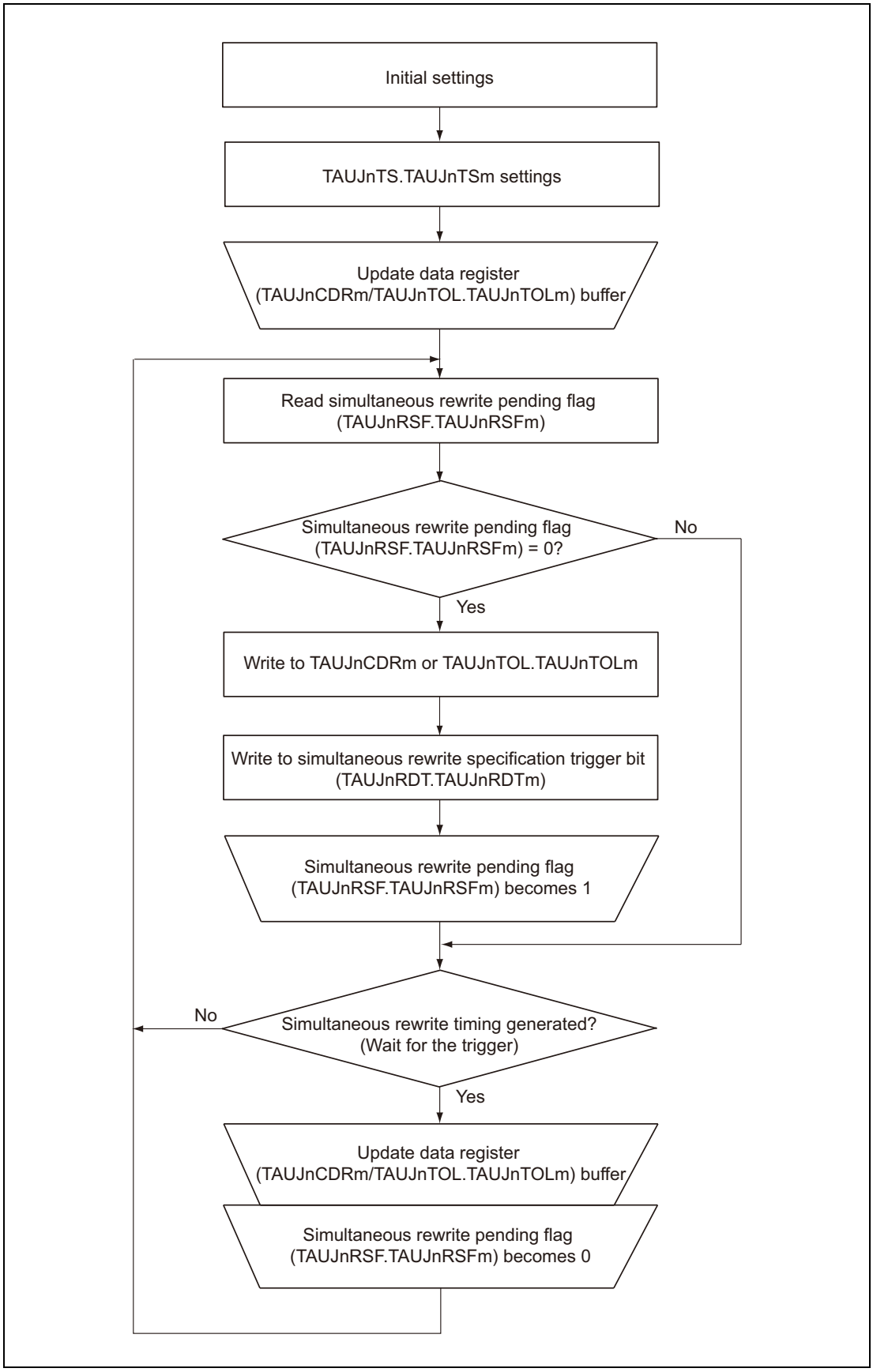

Figure 24.4 General Procedure for Simultaneous Rewrite

24.6.2.1 Initial Settings

- To enable simultaneous rewrite in channel m, set TAUJnRDE.TAUJnRDEm = 1

24.6.2.2 Start Counter and Count Operation

- To start all the TAUJnCNTm counters in the channel group, set the corresponding TAUJnTS.TAUJnTSm bits to 1. TAUJnTOL.TAUJnTOLm and the values in the data registers (TAUJnCDRm) are loaded into the corresponding TAUJnTOL.TAUJnTOLm buffer (TAUJnTOL.TAUJnTOLm buf) and data buffer registers (TAUJnCDRm buf) and the counters start.
- Setting the reload data trigger bit (TAUJnRDT.TAUJnRDTm) to 1 sets the reload flag (TAUJnRSF.TAUJnRSFm) to 1, enabling simultaneous rewrite. TAUJnRSF.TAUJnRSFm remains set to 1 until simultaneous rewrite is completed.
- When a specified trigger for simultaneous rewrite is detected, the TAUJnRSF.TAUJnRSFm bit is checked to see if simultaneous rewrite is enabled (TAUJnRSF.TAUJnRSFm = 1). If enabled, simultaneous rewrite is carried out. Otherwise simultaneous rewrite is not carried out and the system waits for detection of the next simultaneous rewrite trigger.

24.6.2.3 Simultaneous Rewrite

- When the simultaneous rewrite trigger is detected and simultaneous rewrite is enabled (TAUJnRSF.TAUJnRSFm = 1), the current values of the data registers are copied to their buffers. These values are then loaded into the corresponding counters and the values are applied the next time the counter starts or restarts.
- When the simultaneous rewrite is completed, the TAUJnRSF.TAUJnRSFm bit is set to 0, and the system awaits the next simultaneous rewrite trigger.

24.6.3 Other General Rules for Simultaneous Rewrite

The following rules also apply.

- TAUJnRDE.TAUJnRDEm and TAUJnRDM.TAUJnRDMm cannot be changed while the counter is in operation (TAUJnTE.TAUJnTEm = 1).
- TAUJnTOL.TAUJnTOLm can be rewritten only during operation using the PWM output function. For all other functions, TAUJnTOL.TAUJnTOLm should be written before the counter starts. If it is rewritten while any other function is used, TAUJnTTOUTm outputs an invalid wave.

24.6.4 Simultaneous Rewrite Procedure

The simultaneous rewrite procedure in PWM output mode is described in the following figure.

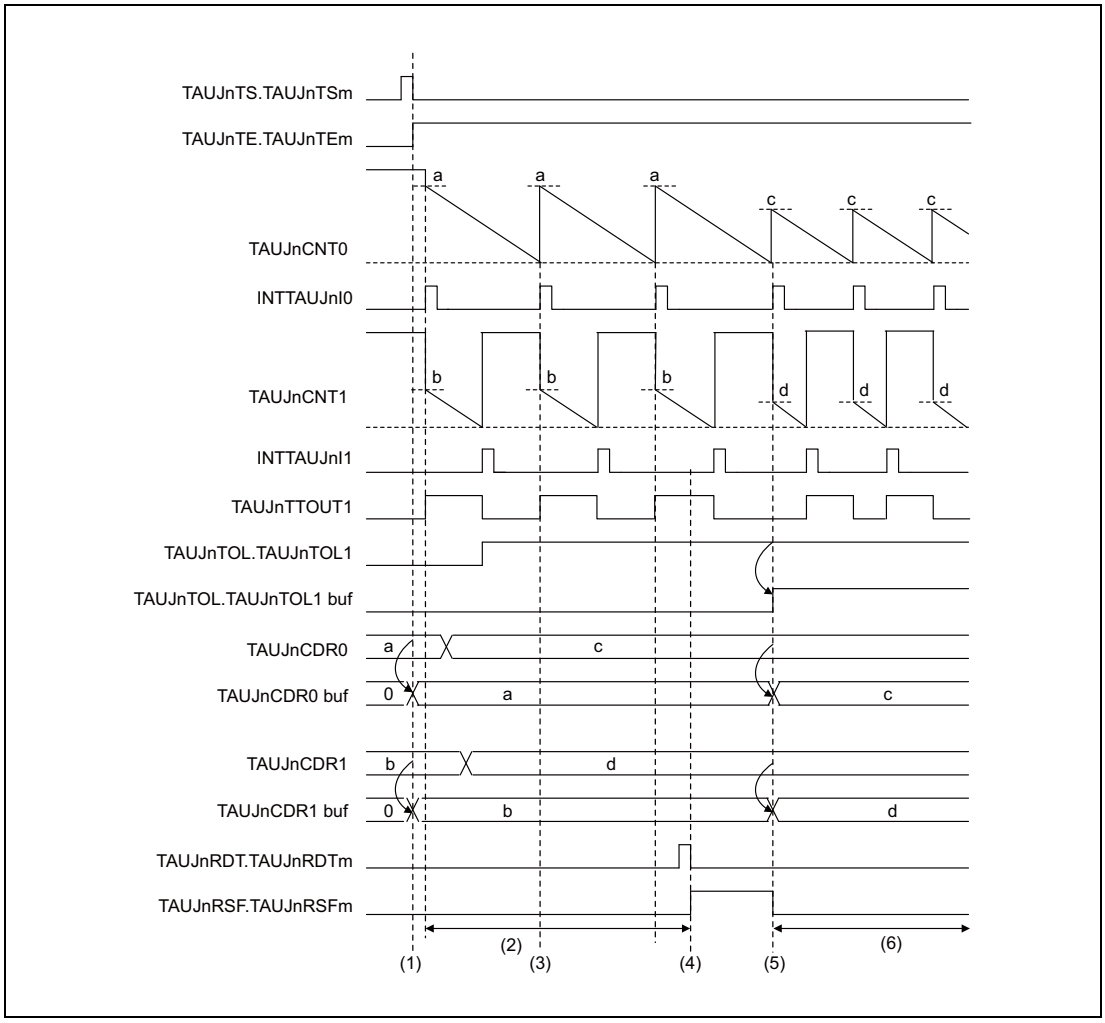

Figure 24.5 Simultaneous Rewrite in PWM Output Mode

Setting

CH0 is a master channel in PWM output mode, and CH1 represents an slave channel in PWM output mode. Simultaneous rewrite is applied when the master channel starts counting.

Description:

(1) When TAUJnTS.TAUJnTSm = 1 is set, the value of TAUJnCDRm is copied to the TAUJnCDRm buffer and the value of TAUJnTOL.TAUJnTOLm is copied to the TAUJnTOL.TAUJnTOLm buffer.

(2) The TAUJnCDRm and TAUJnTOL.TAUJnTOLm registers can be written at any time.

(3) CH0 restarts counting, but simultaneous rewrite does not occur because it is disabled (TAUJnRSF.TAUJnRSFm = 0).

(4) The reload data trigger bit (TAUJnRDT.TAUJnRDTm) is set to 1 which sets the status flag (TAUJnRSF.TAUJnRSFm = 1), enabling simultaneous rewrite.

(5) Simultaneous rewrite is triggered when CH0 restarts counting, because simultaneous rewrite is enabled. The TAUJnCDRm value is loaded into the TAUJnCDRm buffer and the TAUJnTOL.TAUJnTOLm value is loaded into the TAUJnTOL.TAUJnTOLm buffer.

(6) The counter counts down and awaits the next simultaneous rewrite trigger. The values of TAUJnCDRm and TAUJnTOL.TAUJnTOLm can be changed again.

24.7 Channel Output Modes

The output of the TAUJnTTOUTm pin can be controlled in two ways, the latter of which can be further split into individual modes.

- By software (TAUJnTOE.TAUJnTOEm = 0)
  When controlled by software, the value written in the output register bit (TAUJnTO.TAUJnTOm) is sent out of the output pin (TAUJnTTOUTm).
- By TAUJ signals (TAUJnTOE.TAUJnTOEm = 1)
  When controlled by TAUJ signals, the output level of TAUJnTTOUTm is set or reset or toggled by internal signals. The value of TAUJnTO.TAUJnTOm is updated accordingly to reflect the value of TAUJnTTOUTm.
  - Independently (TAUJnTOM.TAUJnTOMm = 0)
    In case of independent operation, the output of the TAUJnTTOUTm pin is only affected by settings of channel m. Therefore, independent channel operation should be selected (TAUJnTOM.TAUJnTOMm = 0).
  - Synchronously (TAUJnTOM.TAUJnTOMm = 1)
    In case of synchronous operation, the output of the TAUJnTTOUTm pin is affected by settings of channel m and those of other channels. Therefore, synchronous channel operation should be selected for all synchronized channels (TAUJnTOM.TAUJnTOMm = 1).

The TAUJnTO.TAUJnTOm bit can always be read to determine the current value of TAUJnTTOUTm, regardless of whether the pin is controlled by software, operated independently, or operated synchronously.

(1) Control bits

The settings of the control bits required to select a specific channel output mode are listed in **Table 24.33, Channel Output Modes**.

The channel output modes are described in details below.

- **Section 24.7.2, Channel Output Modes Controlled Independently by TAUJn Signals**
- **Section 24.7.3, Channel Output Modes Controlled Synchronously by TAUJn Signals**

(2) Batch operation of TAUJnTOm bit

Whether a set value is reflected to the TAUJnTO.TAUJnTOm bit or not is controlled by the TAUJnTOE.TAUJnTOEm bit.

The TAUJnTO.TAUJnTOm setting is written only to the bit (channel) set with TAUJnTOE.TAUJnTOEm bit = 0 when a write to the TAUJnTO register is attempted.

No TAUJnTO.TAUJnTOm setting is reflected to the bit (channel) set with TAUJnTOE.TAUJnTOEm bit = 1.

NOTE

TAUJnTO.TAUJnTOm bit is placed so that its bit number corresponds to a channel number.

(3) Output logic

Positive logic or negative logic of the output is specified by control bit TAUJnTOL.TAUJnTOLm.

The value of TAUJnTOL.TAUJnTOLm bit should be set before the counter is started. It can only be changed during operation with PWM output function. Otherwise, changes to TAUJnTOL.TAUJnTOLm result in an invalid TAUJnTTOUTm signal output.

See **Section 24.6, Simultaneous Rewrite**.

The various channel output modes and the channel output control bits are listed in the following table (TAUJnTOC.TAUJnTOCm = 0).

Table 24.33 Channel Output Modes

Channel Output Mode	TAUJnTOE. TAUJnTOEm	TAUJnTOM. TAUJnTOMm
By software		
Independent channel output mode controlled by software	0	x
By TAUJ signals, independently		
Independent channel output mode 1	1	0
By TAUJ signals, synchronously		
Synchronous channel output mode 1	1	1

- Any combination not in the list is prohibited.
- Any value can be set in the bit indicated as “x”.

NOTE

Do not modify the bits listed below during counting operation (TAUJnTE.TAUJnTEm = 1).

- TAUJnTOM.TAUJnTOMm
- TAUJnTOC.TAUJnTOCm

24.7.1 General Procedures for Specifying a Channel Output Mode

This section describes the general procedures for specifying a TAUJnTTOUTm channel output mode. The prerequisite is that timer output operation is disabled (TAUJnTOE.TAUJnTOEm = 0).

1. Set TAUJnTO.TAUJnTOm to specify the initial level of the TAUJnTTOUTm output.
2. Set channel output mode according to **Table 24.33, Channel Output Modes**, and the output logic using the TAUJnTOL.TAUJnTOLm bit.
3. Start the counter (TAUJnTS.TAUJnTSm = 1).

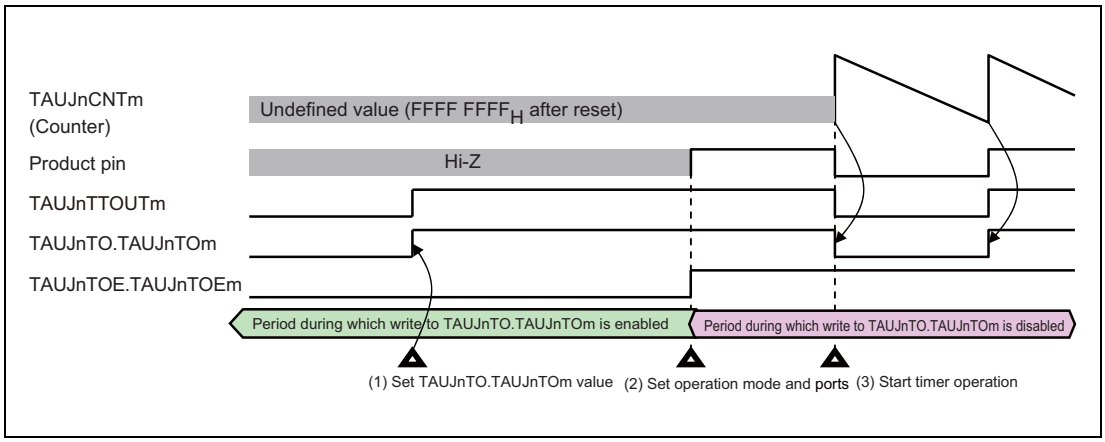

Figure 24.6 General Procedure for Specifying a TAUJnTTOUTm Channel Output Mode

24.7.2 Channel Output Modes Controlled Independently by TAUJn Signals

This section lists the channel output modes that are controlled independently by TAUJn signals. The control bits used to specify a mode are listed in **Table 24.33, Channel Output Modes**.

(1) Independent channel output mode 1

Set/reset conditions

In this output mode, TAUJnTTOUTm toggles when INTTAUJnIm is detected.

The value of TAUJnTOL.TAUJnTOLm is ignored.

Prerequisites

There are no prerequisites other than those shown in **Table 24.33, Channel Output Modes**.

24.7.3 Channel Output Modes Controlled Synchronously by TAUJn Signals

This section lists the channel output modes that are controlled synchronously by TAUJn signals. The control bits used to specify a mode are listed in **Table 24.33, Channel Output Modes**.

(1) Synchronous channel output mode 1

Set/reset conditions

In this output mode, INTTAUJnIm of master channel serves as a set signal and INTTAUJnIm of the slave channel as a reset signal. If INTTAUJnIm of master channel and INTTAUJnIm of the slave channel are generated at the same time, INTTAUJnIm of the slave channel (reset signal) has priority over INTTAUJnIm (set signal) of master channel, i.e., the master channel is ignored.

Prerequisites

There are no prerequisites other than those shown in **Table 24.33, Channel Output Modes**.

24.8 Start Timing in Each Operating Modes

This section describes the timing at which the counter starts after TAUJnTS.TAUJnTSm is set to 1 in each operating mode.

The value of data register (TAUJnCDRm register) and whether or not an interrupt occurs depends on mode and register settings.

CAUTION

The count start timing described in this section is for your reference. Actually, the count start timing depends on the count clock timing.

24.8.1 Interval Timer Mode, Capture Mode, and Count Capture Mode

The counter starts operating with the next count clock cycle after TAUJnTS.TAUJnTSm is set to 1. The value of data register is also loaded when the counter starts.

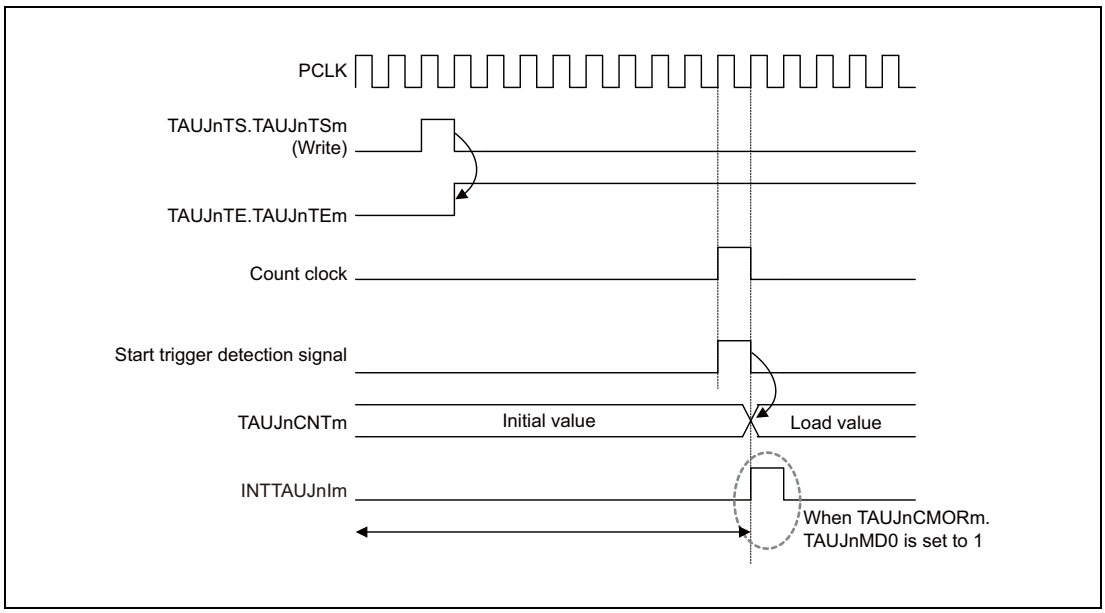

Figure 24.7 Start Timing in Interval Timer Mode, Capture Mode, and Count Capture Mode

24.8.2 Other Operating Modes

In other operating modes, the counter clock cycle is irrelevant to the start of counter operations. The counter is triggered only by TAUJnTTINm valid edge detection. As the counter starts, the value of the data register is also loaded. The cycle of the counter clock is irrelevant to the start of counter operation but does determine the frequency with which all operations take place.

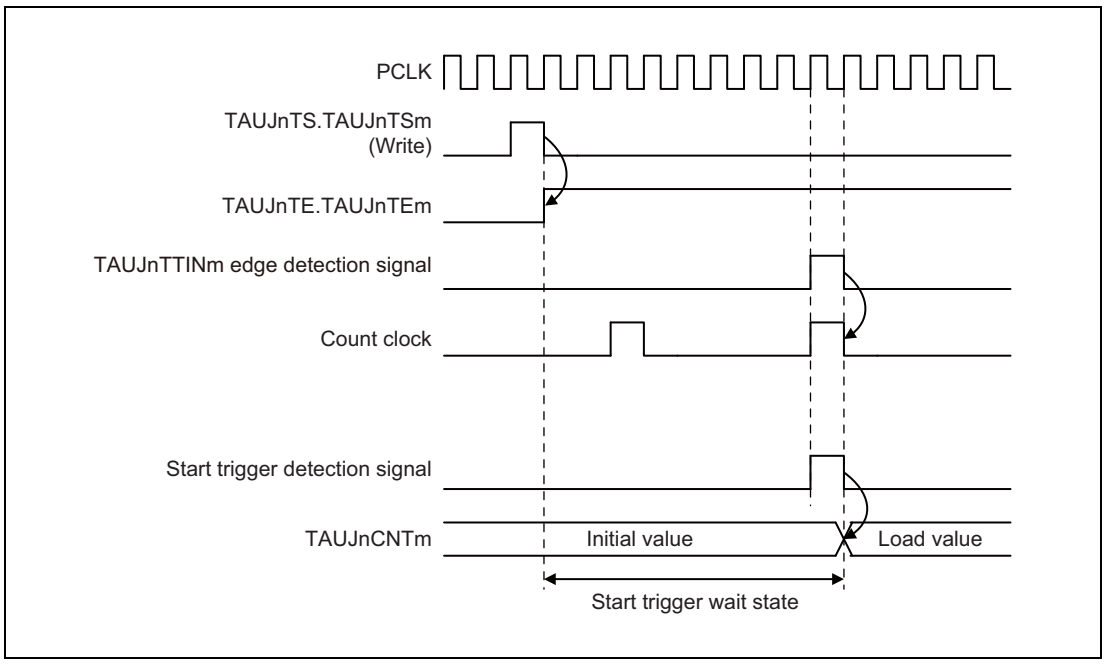

Figure 24.8 Start Timing in Other Operating Modes

24.9 TAUJnTTOUTm Output and INTTAUJnIm Generation when Counter Starts or Restarts

The TAUJnCMORm.TAUJnMD0 bits are used to specify whether the corresponding INTTAUJnIm interrupts are generated when the counter starts. The effect of the TAUJnCMORm.TAUJnMD0 bits on INTTAUJnIm generation when counting starts and on TAUJnTTOUTm depends on the selected mode. For details, see the descriptions of TAUJnCMORm.TAUJnMD0 in sections on the related modules.

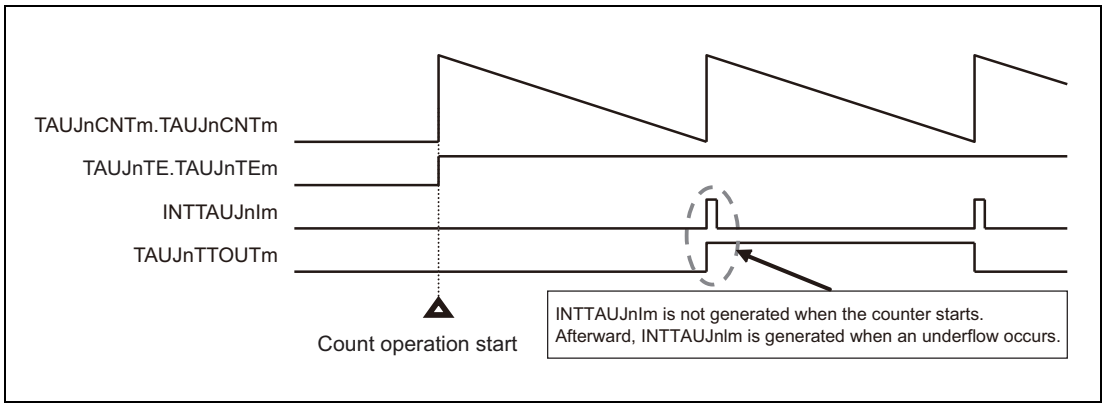

Figure 24.9 INTTAUJnIm Generation Timing (TAUJnCMORm.TAUJnMD0 = 0)

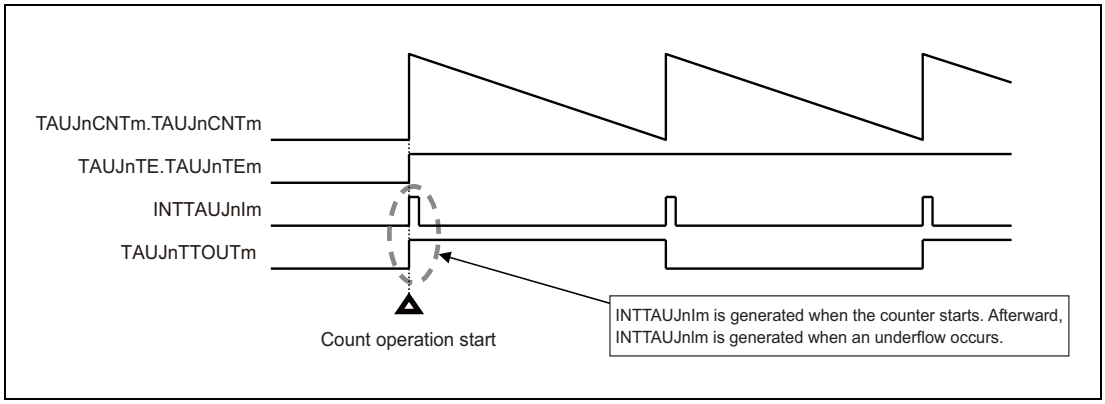

Figure 24.10 INTTAUJnIm Generation Timing (TAUJnCMORm.TAUJnMD0 = 1)

24.10 Interrupt Generation upon Overflow

Certain independent functions that count up, overflow without generating an interrupt when they reach FFFF $FFFF_H$. This section describes how it is possible to generate an interrupt, by combining a channel operating in one of these modes with a channel in a different operation mode which counts down.

The appropriate operation mode for the second channel depends on the operation mode of the first channel. Nevertheless, the principle is the same for all combinations:

- Find an operation mode for the second channel that counts down in such a manner, that it reaches 0000 0000_H at the same time as the first channel overflows (TAUJnCNTm = FFFF $FFFF_H$).
- Set TAUJnCDRm of the second channel to FFFF $FFFF_{H.}$
- The two channels must count at the same speed (i.e. they must have the same count clock).

Result:

The down-counter of the second channel reaches 0000 0000_H at exactly the same time as the up-counter of the first channel overflows (TAUJnCNTm = FFFF $FFFF_H$). Thus the second channel generates the desired interrupt.

The following sections list the operating modes that count down that are required to match specific operating modes that count up, as well as example timing diagrams.

24.10.1 Combination of the TAUJnTTINm Input Position Detection Function and the Interval Timer Function

When the counters of both channels are started simultaneously, INTTAUJnIm of the interval timer function can detect the overflow when TAUJnCNTm of the TAUJnTTINm input position detection function exceeds FFFF $FFFF_H$.

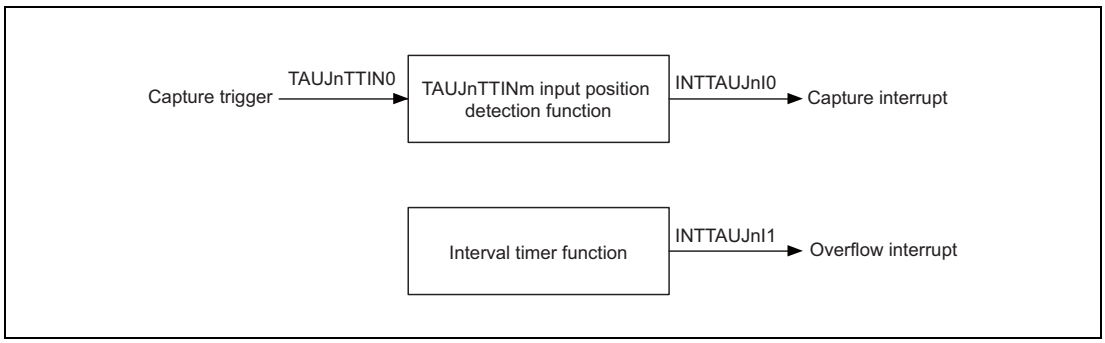

Figure 24.11 Example of Combination of the TAUJnTTINm Input Position Detection Function and the Interval Timer Function (Ch0, Ch1)

Timing diagram

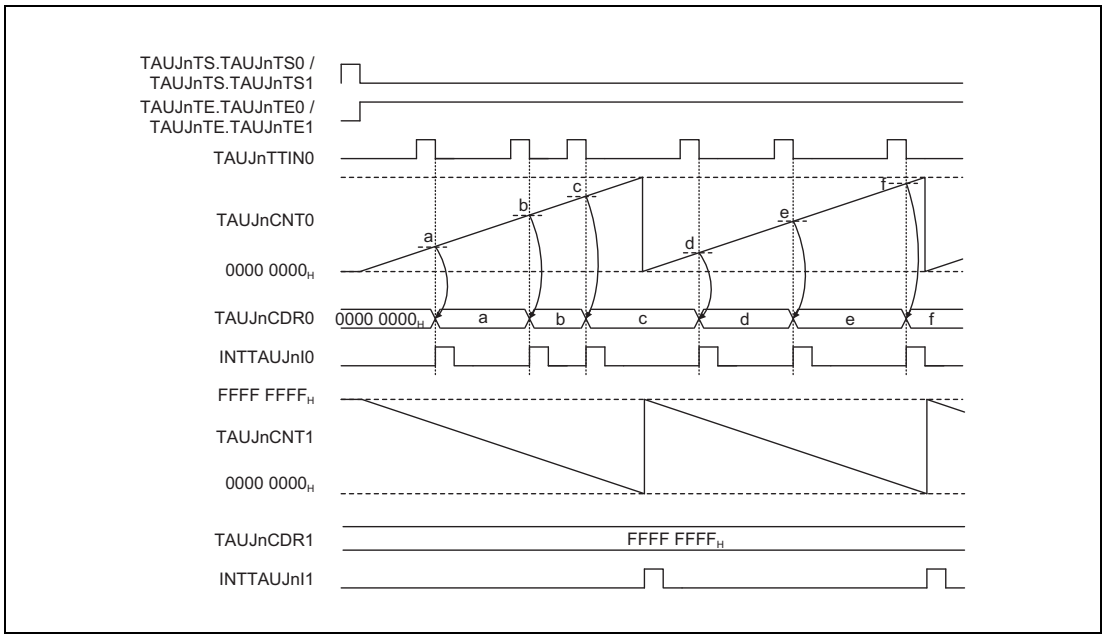

Figure 24.12 Example of Interrupt Generation via Combination of the TAUJnTTINm Input Position Detection Function and the Interval Timer Function (Ch0, Ch1)

24.11 TAUJnTTINm Edge Detection

Edge detection is based on the operating clock. This means that an edge can only be detected at the next rising edge of the operating clock. This can lead to a maximum delay of one operating clock cycle.

The following figure shows when edge detection takes place.

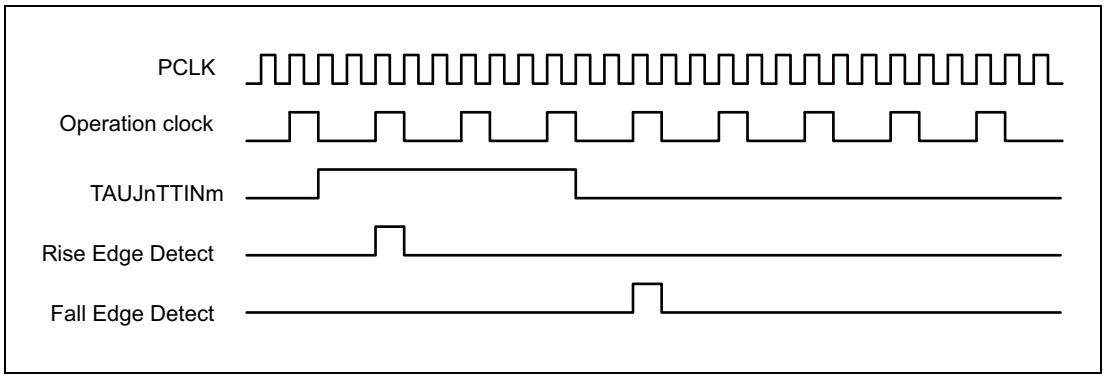

Figure 24.13 Basic Edge Detection Timing

Figure 24.13 shows an image of operation timing. In the actual operation, delay time occurs due to noise filter and synchronization circuit between the TAUJnIm pin and TAUJn.

- Delay time by a noise filter + delay time for edge detection (maximum one sampling clock cycle)

24.12 Independent Channel Operation Functions

The following sections list the independent channel operation functions provided by the TAUJ. For a general overview of independent channel operation functions, see **Section 24.2, Overview**.

24.12.1 Interval Timer Function

24.12.1.1 Overview

Summary

This function is used as a reference timer for generating timer interrupts (INTTAUJnIm) at regular intervals. When an interrupt is generated, the TAUJnTTOUTm signal toggles, resulting in a square wave.

Prerequisites

- The operation mode must be set to Interval Timer Mode, refer to **Table 24.34, Contents of the TAUJnCMORm register for the Interval Timer Function.**
- The channel output mode must be set to Independent Channel Output Mode 1, refer to **Section 24.7, Channel Output Modes**.

Description

The counter is enabled by setting the channel trigger bit (TAUJnTS.TAUJnTSm) to 1. This in turn sets TAUJnTE.TAUJnTEm = 1, enabling count operation. The current value of TAUJnCDRm is written to TAUJnCNTm and the counter starts to count down from this value.

When the counter reaches $0000\ 0000_H$, INTTAUJnIm is generated and the TAUJnTTOUTm signal toggles. TAUJnCNTm then loads the TAUJnCDRm value and subsequently continues operation.

The value of TAUJnCDRm can be rewritten at any time, and the changed value of TAUJnCDRm is applied the next time the counter starts to count down.

The counter can be stopped by setting TAUJnTT.TAUJnTTm to 1, which in turn sets TAUJnTE.TAUJnTEm to 0. TAUJnCNTm and TAUJnTTOUTm stop but retain their values. The counter can be restarted by setting TAUJnTS.TAUJnTSm to 1. The counter can also be forcibly restarted (without stopping it first) by setting TAUJnTS.TAUJnTSm to 1 during operation.

Conditions

If the TAUJnCMORm.TAUJnMD0 bit is set to 0, the first interrupt after a start or restart is not generated, and therefore TAUJnTTOUTm does not toggle. This results in an inverted TAUJnTTOUTm signal compared to when TAUJnCMORm.TAUJnMD0 is set to 1. For details refer to **Section 24.9, TAUJnTTOUTm Output and INTTAUJnIm Generation when Counter Starts or Restarts**.

24.12.1.2 Equations

INTTAUJnIm cycle = count clock cycle × (TAUJnCDRm + 1)

TAUJnTTOUTm square wave cycle = count clock cycle × (TAUJnCDRm + 1) × 2

24.12.1.3 Block Diagram and General Timing Diagram

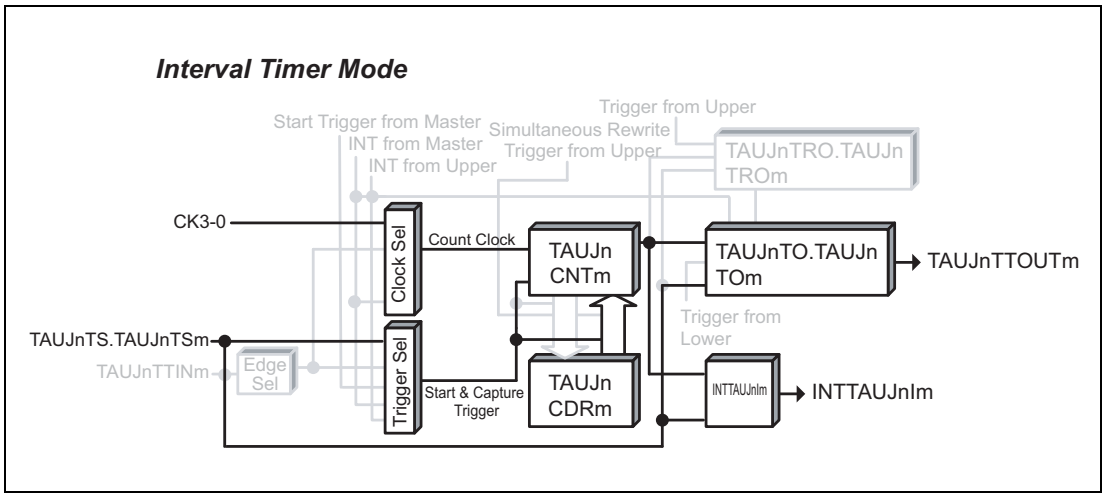

Figure 24.14 Block Diagram for Interval Timer Function

The following settings apply to the general timing diagram:

- INTTAUJnIm is generated at operation start (TAUJnCMORm.TAUJnMD0 = 1)

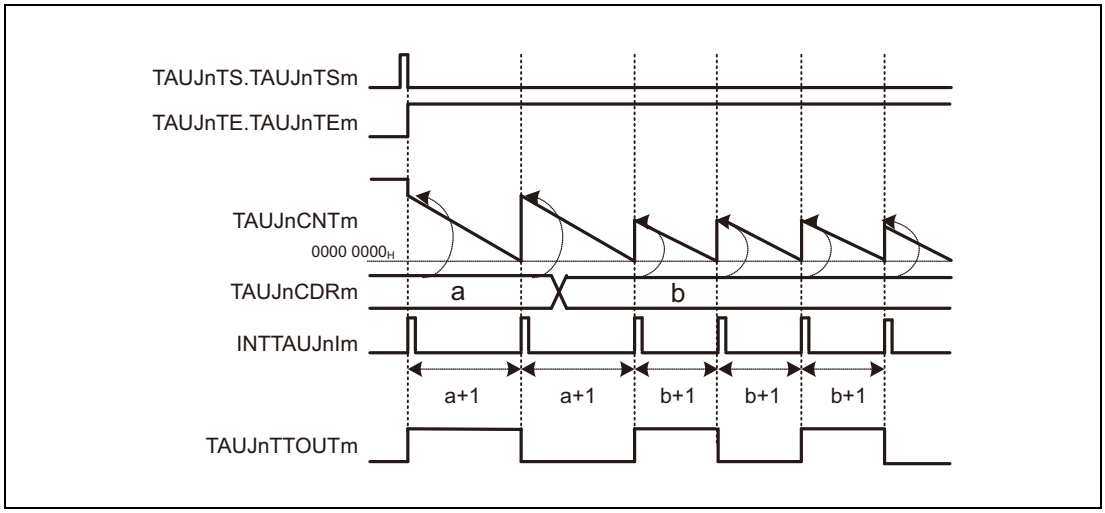

Figure 24.15 General Timing Diagram for Interval Timer Function

24.12.1.4 Register Settings

(1) TAUJnCMORm

Bit	15	14	13	12	11	10	9	8	7	6	5	4	3	2	1	0
	TAUJnCKS[1:0]		TAUJnCCS[1:0]		TAUJnMAS	TAUJnSTS[2:0]			TAUJnCOS[1:0]		—	TAUJnMD[4:1]				TAUJnMD0
Value after reset	0	0	0	0	0	0	0	0	0	0	0	0	0	0	0	0
R/W	R/W	R/W	R/W	R/W	R/W	R/W	R/W	R/W	R/W	R/W	R	R/W	R/W	R/W	R/W	R/W

Table 24.34 Contents of the TAUJnCMORm register for the Interval Timer Function

Bit Position	Bit Name	Function
15, 14	TAUJnCKS[1:0]	Selects an operating clock. 00: Prescaler output CK0 01: Prescaler output CK1 10: Prescaler output CK2 11: Prescaler output CK3
13, 12	TAUJnCCS[1:0]	Write 00_B.
11	TAUJnMAS	Write 0_B.
10 to 8	TAUJnSTS[2:0]	Write 000_B.
7, 6	TAUJnCOS[1:0]	Write 00_B.
5	Reserved	When writing, write the value after reset.
4 to 1	TAUJnMD[4:1]	Write 0000_B.
0	TAUJnMD0	0: INTTAUJnIm not generated and TAUJnTTOUTm does not toggle at operation start or restart 1: Generates INTTAUJnIm and toggles TAUJnTTOUTm at operation start or restart

(2) TAUJnCMURm

Bit	7	6	5	4	3	2	1	0
	—	—	—	—	—	—	TAUJnTIS[1:0]	
Value after reset	0	0	0	0	0	0	0	0
R/W	R	R	R	R	R	R	R/W	R/W

Table 24.35 Contents of the TAUJnCMURm register for the Interval Timer Function

Bit Position	Bit Name	Function
7 to 2	Reserved	When writing, write the value after reset.
1, 0	TAUJnTIS[1:0]	00: Not used, so set to 00

(3) Channel output mode

Table 24.36 Control Bit Settings for Independent Channel Output Mode1

Bit name	Setting
TAUJnTOE.TAUJnTOEm	Write 1_B.
TAUJnTOM.TAUJnTOMm	Write 0_B.
TAUJnTOC.TAUJnTOCm	Write 0_B.
TAUJnTOL.TAUJnTOLm	Write 0_B.

NOTE

The channel output mode can also be set to Channel Output Mode Controlled by Software by setting TAUJnTOE.TAUJnTOEm = 0. TAUJnTTOUTm can then be controlled independently of the interrupts. For details refer to **Section 24.7, Channel Output Modes**.

(4) Simultaneous rewrite

The simultaneous rewrite registers (TAUJnRDE and TAUJnRDM) cannot be used with the Interval Timer Function. Therefore, these registers must be set to 0.

Table 24.37 Simultaneous Rewrite Settings for Interval Timer Function

Bit name	Setting
TAUJnRDE.TAUJnRDEm	0: Disables simultaneous rewrite
TAUJnRDM.TAUJnRDMm	0: When simultaneous rewrite is disabled (TAUJnRDE.TAUJnRDEm = 0), set these bits to 0

24.12.1.5 Operating Procedure for Interval Timer Function

Table 24.38 Operating Procedure for Interval Timer Function

	Operation	Status of TAUJn
Initial channel setting	Set the TAUJnCMORm register and TAUJnCMURm registers as described in **Table 24.34, Contents of the TAUJnCMORm register for the Interval Timer Function** and **Table 24.35, Contents of the TAUJnCMURm register for the Interval Timer Function**. Set the value of the TAUJnCDRm register. Set the channel output mode by setting the control bits as described in **Table 24.36, Control Bit Settings for Independent Channel Output Mode1**.	Channel operation is stopped.
Start operation	Set TAUJnTS.TAUJnTSm to 1. TAUJnTS.TAUJnTSm is a trigger bit, so it is automatically cleared to 0.	TAUJnTE.TAUJnTEm is set to 1 and the counter starts. TAUJnCNTm loads the TAUJnCDRm value. When TAUJnCMORm.TAUJnMD0 = 1, INTTAUJnIm is generated and TAUJnTTOUTm toggles.
During operation	The TAUJnCDRm register value can be changed at any time. The TAUJnCNTm register can be read at all times.	TAUJnCNTm counts down. When the counter reaches $0000\ 0000_H$: • TAUJnCNTm reloads the TAUJnCDRm value and continues count operation • INTTAUJnIm is generated and TAUJnTTOUTm toggles.
Stop operation	Set TAUJnTT.TAUJnTTm to 1. TAUJnTT.TAUJnTTm is a trigger bit, so it is automatically cleared to 0.	TAUJnTE.TAUJnTEm is cleared to 0 and the counter stops. TAUJnCNTm and TAUJnTTOUTm stop and retain their current values.

Restart

24.12.1.6 Specific Timing Diagrams

(1) TAUJnCDRm = 0000 0000$_H$, count clock = PCLK/2

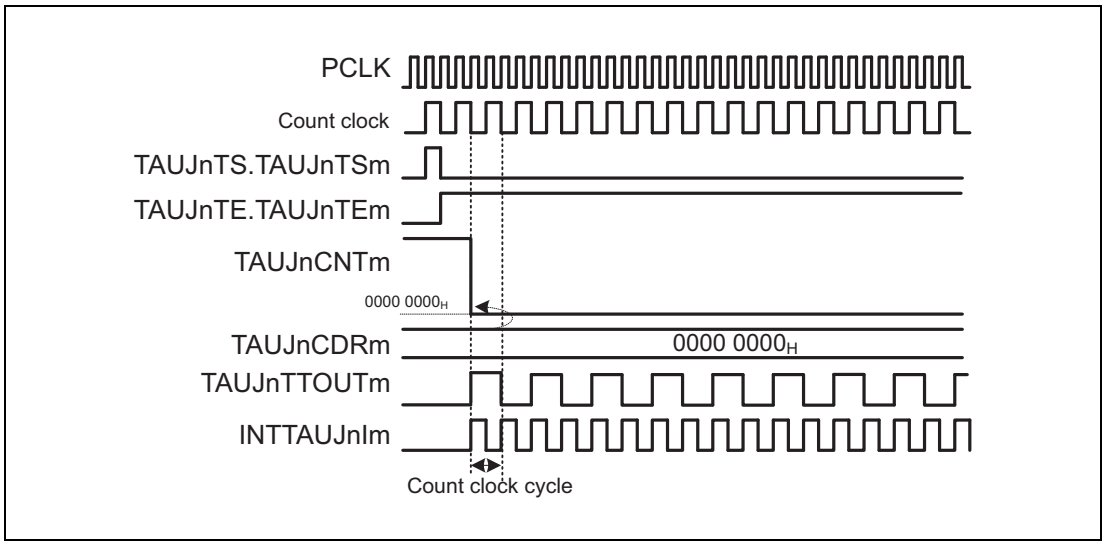

Figure 24.16 TAUJnCDRm = 0000 0000$_H$, Count Clock = PCLK/2

- If TAUJnCDRm = 0000 0000$_H$ and the count clock = PCLK/2, the TAUJnCDRm value is written to TAUJnCNTm every count clock, meaning that TAUJnCNTm is always 0000 0000$_H$.
- INTTAUJnIm is generated every count clock, resulting in TAUJnTTOUTm toggling every count clock.

(2) TAUJnCDRm = 0000 0000$_H$, count clock = PCLK

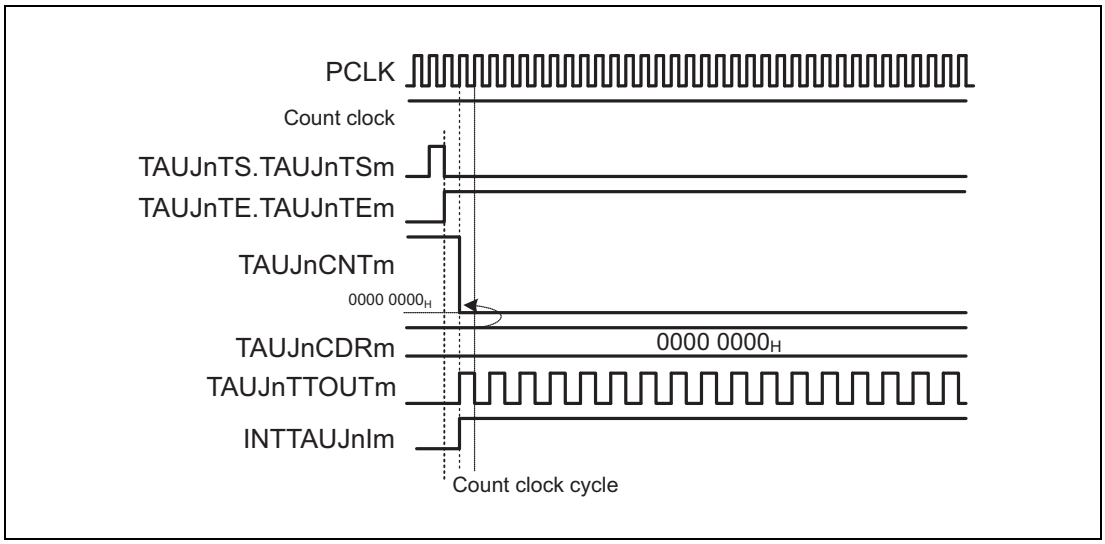

Figure 24.17 TAUJnCDRm = 0000 0000$_H$, Count Clock = PCLK

- If TAUJnCDRm = 0000 0000$_H$ and the count clock = PCLK, the TAUJnCDRm value is written to TAUJnCNTm every PCLK clock, meaning that TAUJnCNTm is always 0000 0000$_H$.
- INTTAUJnIm is fixed to the high level. Though the first interrupt is generated, subsequent interrupts are not generated. TAUJnTTOUTm is toggled every PCLK clock.

(3) Operation stop and restart

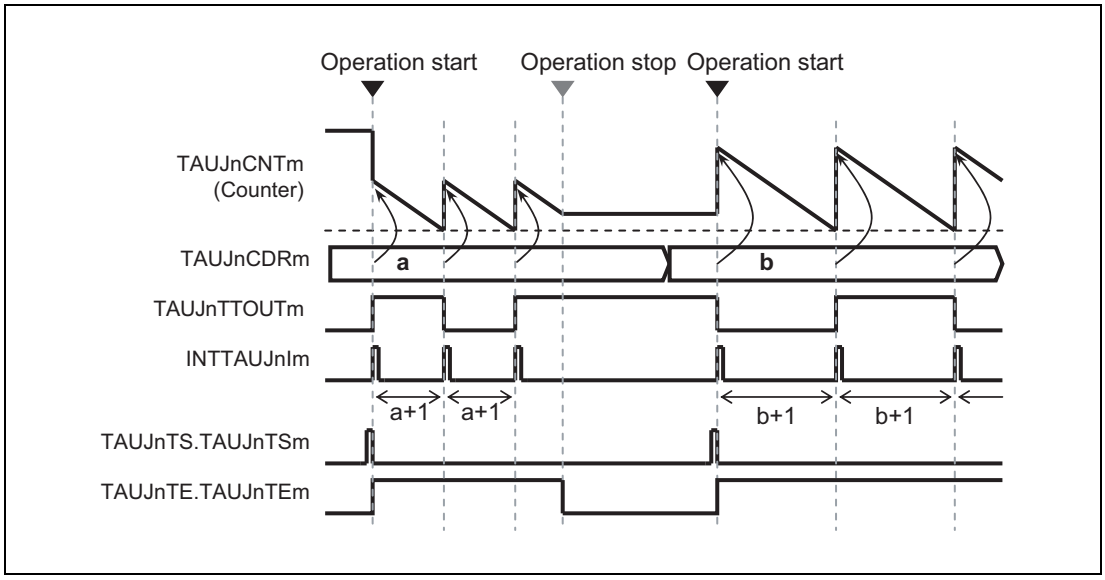

Figure 24.18 Operation Stop and Restart, TAUJnCMORm.TAUJnMD0 = 1

- The counter can be stopped by setting TAUJnTT.TAUJnTTm to 1, which in turn sets TAUJnTE.TAUJnTEm to 0.
- TAUJnCNTm and TAUJnTTOUTm stop but retain their values.
- The counter can be restarted by setting TAUJnTS.TAUJnTSm to 1.

(4) Forced restart

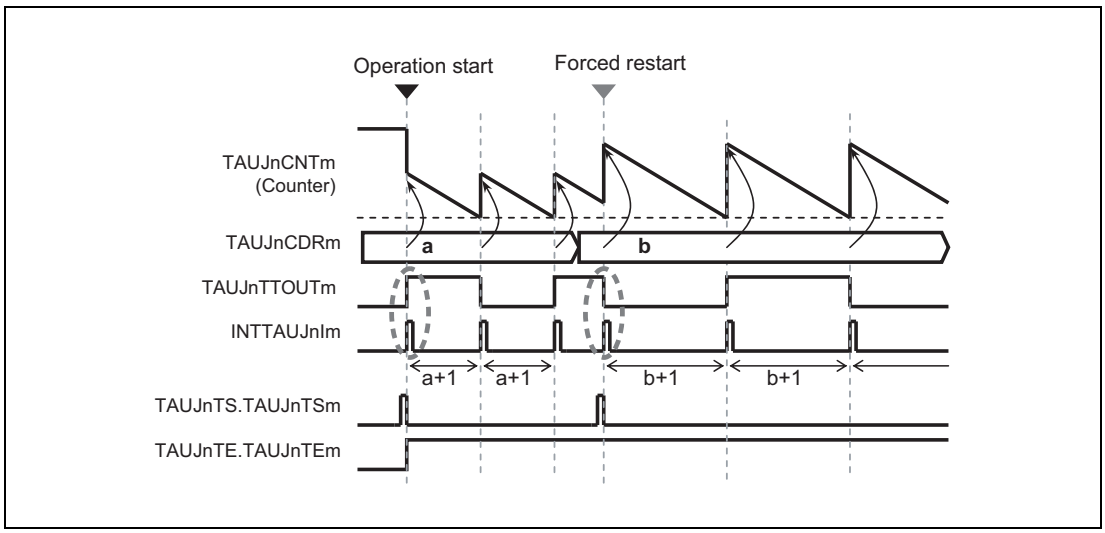

Figure 24.19 Forced Restart Operation, TAUJnCMORm.TAUJnMD0 = 1

- The counter can be forcibly restarted (without stopping it first) by setting TAUJnTS.TAUJnTSm to 1 during operation.
- If the TAUJnCMORm.TAUJnMD0 bit is set to 1, the first interrupt after a start or restart is generated.
- At the time of a forced restart, the value of TAUJnCDRm is reflected to TAUJnCNTm and counting starts. Perform a forced restart to reflect the modified value of TAUJnCDRm immediately.

24.12.2 TAUJnTTINm Input Interval Timer Function

24.12.2.1 Overview

Summary

This function is used as a reference timer for generating timer interrupts (INTTAUJnIm) at regular intervals or when a valid TAUJnTTINm input edge is detected. When an interrupt is generated, the TAUJnTTOUTm signal toggles, resulting in a square wave.

Prerequisites

- The operation mode must be set to Interval Timer Mode, refer to **Table 24.39, Contents of the TAUJnCMORm register for TAUJnTTINm Input Interval Timer Function**.
- The channel output mode must be set to Independent Channel Output Mode 1, refer to **Section 24.7, Channel Output Modes**.

Description

This function operates in an identical manner to the Interval Timer Function (see **Section 24.12.1, Interval Timer Function**), except that this function is restarted by a valid TAUJnTTINm input edge. The type of edge used as the trigger is specified using the TAUJnCMURm.TAUJnTIS[1:0] bits. Either rising edge, falling edge, or rising and falling edge can be selected.

24.12.2.2 Equations

INTTAUJnIm cycle = count clock cycle × (TAUJnCDRm + 1)

TAUJnTTOUTm square wave cycle = count clock cycle × (TAUJnCDRm + 1) × 2

24.12.2.3 Block Diagram and General Timing Diagram

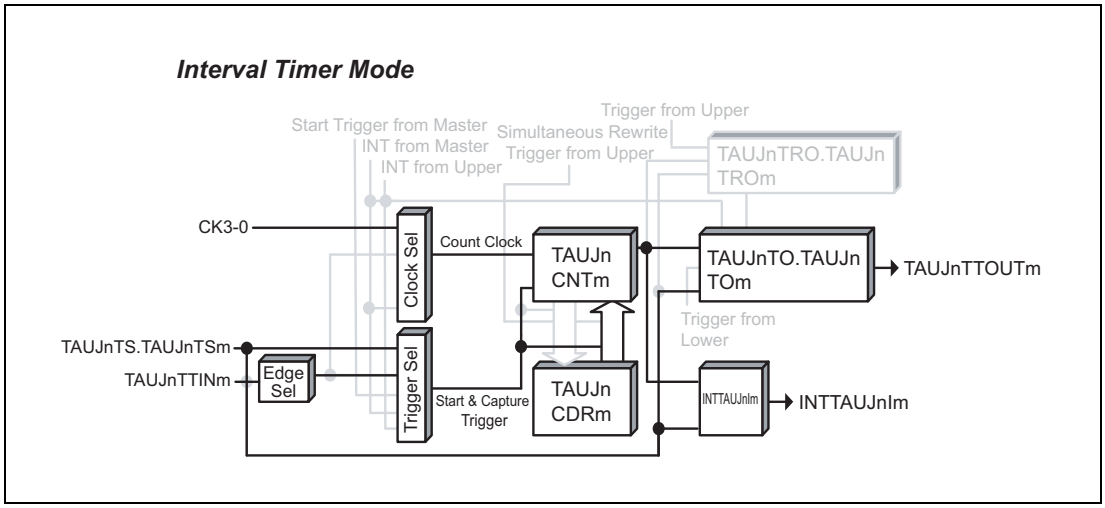

Figure 24.20 Block Diagram for TAUJnTTINm Input Interval Timer Function

The following settings apply to the general timing diagram:

- INTTAUJnIm is generated at operation start (TAUJnCMORm.TAUJnMD0 = 1)
- Rising edge detection (TAUJnCMURm.TAUJnTIS[1:0] = 01_B)

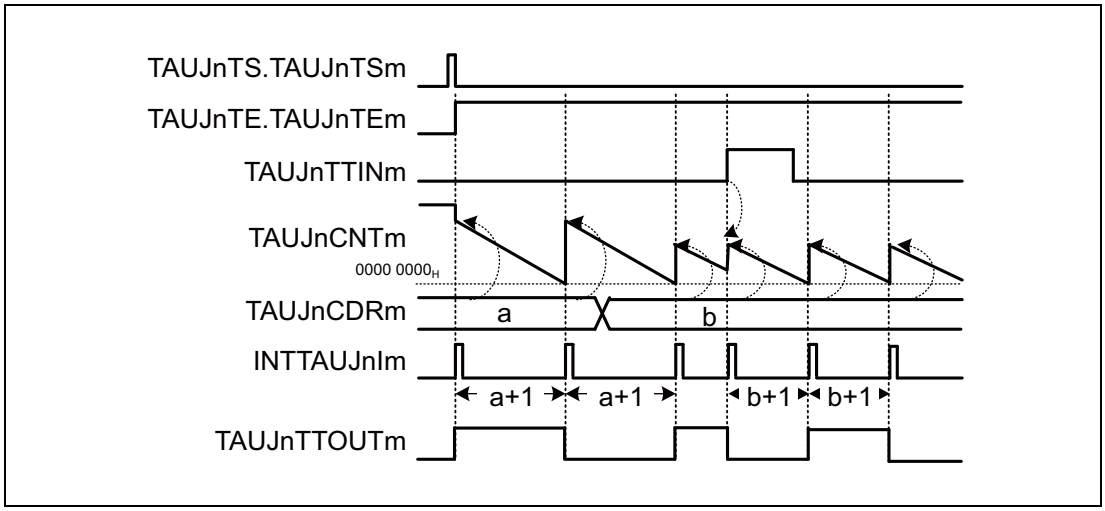

Figure 24.21 General Timing Diagram for TAUJnTTINm Input Interval Timer Function

24.12.2.4 Register Settings

(1) TAUJnCMORm

Bit	15	14	13	12	11	10	9	8	7	6	5	4	3	2	1	0
	TAUJnCKS[1:0]		TAUJnCCS[1:0]		TAUJn MAS	TAUJnSTS[2:0]			TAUJnCOS[1:0]		—	TAUJnMD[4:1]				TAUJn MD0
Value after reset	0	0	0	0	0	0	0	0	0	0	0	0	0	0	0	0
R/W	R/W	R/W	R/W	R/W	R/W	R/W	R/W	R/W	R/W	R/W	R	R/W	R/W	R/W	R/W	R/W

Table 24.39 Contents of the TAUJnCMORm register for TAUJnTTINm Input Interval Timer Function

Bit Position	Bit Name	Function
15, 14	TAUJnCKS[1:0]	Selects an operating clock. 00: Prescaler output CK0 01: Prescaler output CK1 10: Prescaler output CK2 11: Prescaler output CK3
13, 12	TAUJnCCS[1:0]	Write 00_B.
11	TAUJnMAS	Write 0_B.
10 to 8	TAUJnSTS[2:0]	Write 001_B.
7, 6	TAUJnCOS[1:0]	Write 00_B.
5	Reserved	When writing, write the value after reset.
4 to 1	TAUJnMD[4:1]	Write 0000_B.
0	TAUJnMD0	0: INTTAUJnIm not generated and TAUJnTTOUTm does not toggle at operation start 1: Generates INTTAUJnIm and toggles TAUJnTTOUTm at operation start

(2) TAUJnCMURm

Bit	7	6	5	4	3	2	1	0
	—	—	—	—	—	—	TAUJnTIS[1:0]	
Value after reset	0	0	0	0	0	0	0	0
R/W	R	R	R	R	R	R	R/W	R/W

Table 24.40 Contents of the TAUJnCMURm register for TAUJnTTINm Input Interval Timer Function

Bit Position	Bit Name	Function
7 to 2	Reserved	When writing, write the value after reset.
1, 0	TAUJnTIS[1:0]	00: Falling edge detection 01: Rising edge detection 10: Rising and falling edge detection 11: Setting prohibited

(3) Channel output mode

Table 24.41 Control Bit Settings for Independent Channel Output Mode 1

Bit name	Setting
TAUJnTOE.TAUJnTOEm	Write 1_B.
TAUJnTOM.TAUJnTOMm	Write 0_B.
TAUJnTOC.TAUJnTOCm	Write 0_B.
TAUJnTOL.TAUJnTOLm	Write 0_B.

NOTE

The channel output mode can also be set to Channel Output Mode Controlled by Software by setting TAUJnTOE.TAUJnTOEm = 0. TAUJnTTOUTm can then be controlled independently of the interrupts. For details refer to **Section 24.7, Channel Output Modes**.

(4) Simultaneous rewrite

The simultaneous rewrite registers (TAUJnRDE and TAUJnRDM) cannot be used with the TAUJnTTINm Input Interval Timer Function. Therefore, these registers must be set to 0.

Table 24.42 Simultaneous Rewrite Settings for TAUJnTTINm Input Interval Timer Function

Bit name	Setting
TAUJnRDE.TAUJnRDEm	0: Disables simultaneous rewrite
TAUJnRDM.TAUJnRDMm	0: When simultaneous rewrite is disabled (TAUJnRDE.TAUJnRDEm = 0), set these bits to 0

24.12.2.5 Operating Procedure for TAUJnTTINm Input Interval Timer Function

Table 24.43 Operating Procedure for TAUJnTTINm Input Interval Timer Function

	Operation	Status of TAUJn
Initial channel setting	Set the TAUJnCMORm register and TAUJnCMURm registers as described in **Table 24.39, Contents of the TAUJnCMORm register for TAUJnTTINm Input Interval Timer Function** and **Table 24.40, Contents of the TAUJnCMURm register for TAUJnTTINm Input Interval Timer Function**. Set the value of the TAUJnCDRm register Set the channel output mode by setting the control bits as described in **Table 24.41, Control Bit Settings for Independent Channel Output Mode 1**.	Channel operation is stopped.
Start operation	Set TAUJnTS.TAUJnTSm to 1. TAUJnTS.TAUJnTSm is a trigger bit, so it is automatically cleared to 0.	TAUJnTE.TAUJnTEm is set to 1 and the counter starts. TAUJnCNTm loads the TAUJnCDRm value. When TAUJnCMORm.TAUJnMD0 = 1, INTTAUJnIm is generated and TAUJnTTOUTm toggles
During operation	The values of the TAUJnCMURm.TAUJnTIS[1:0] and TAUJnCDRm registers can be changed at any time. The TAUJnCNTm register can be read at all times. Detection of TAUJnTTINm edge	TAUJnCNTm counts down. When the counter reaches $0000\ 0000_H$: • TAUJnCNTm reloads the TAUJnCDRm value and continues count operation • INTTAUJnIm is generated and TAUJnTTOUTm toggles When a TAUJnTTINm input valid edge is detected during count operation, TAUJnCNTm reloads the TAUJnCDRm value and continues count operation. Afterwards, this procedure is repeated.
Stop operation	Set TAUJnTT.TAUJnTTm to 1. TAUJnTT.TAUJnTTm is a trigger bit, so it is automatically cleared to 0.	TAUJnTE.TAUJnTEm is cleared to 0 and the counter stops. TAUJnCNTm and TAUJnTTOUTm stop and retain their current values.

Restart

24.12.2.6 Specific Timing Diagrams

The timing diagrams in **Section 24.12.1, Interval Timer Function** also apply, and in addition, the counter can also be restarted by an effective TAUJnTTINm input edge.

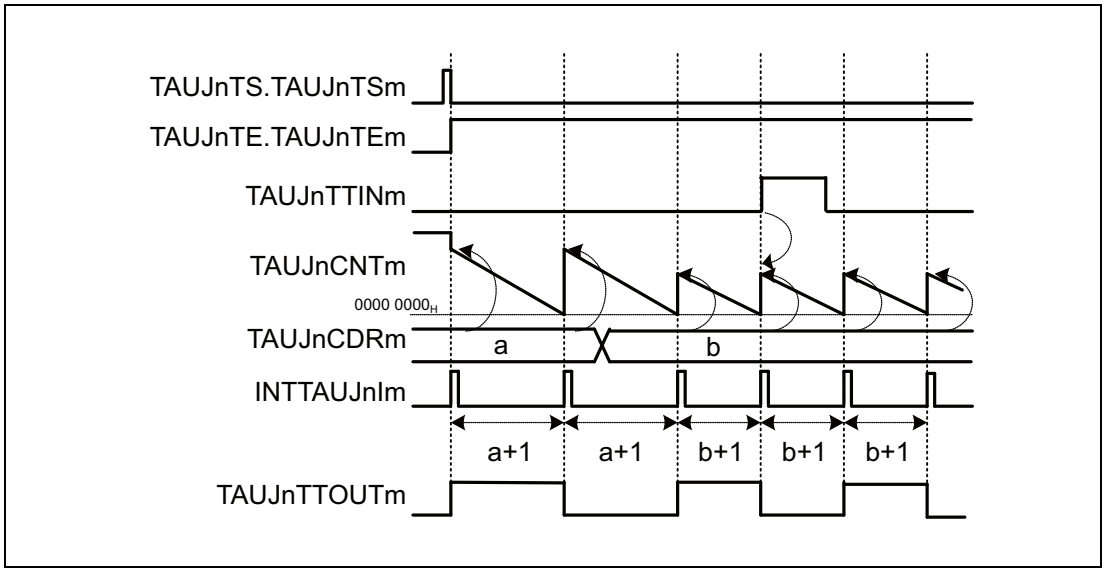

Figure 24.22 Counter Triggered by Rising TAUJnTTINm Input Edge (TAUJnCMURm.TAUJnTIS[1:0] = 01_B), TAUJnCMORm.TAUJnMD0 = 1

If an effective TAUJnTTINm input edge is detected, an interrupt is generated which causes TAUJnTTOUTm to toggle. In this example, the effective edge is a rising edge (TAUJnCMURm.TAUJnTIS[1:0] = 01_B).

24.12.3 TAUJnTTINm Input Pulse Interval Measurement Function

24.12.3.1 Overview

Summary

This function captures the count value and uses this value and the overflow bit TAUJnCSRm.TAUJnOVF to measure the interval of the TAUJnTTINm input signal.

Prerequisites

- The operation mode must be set to capture mode, refer to **Table 24.45, Contents of the TAUJnCMORm register for TAUJnTTINm Input Pulse Interval Measurement Function**.
- TAUJnTTOUTm is not used for this function.

Description

The counter is enabled by setting the channel trigger bit (TAUJnTS.TAUJnTSm) to 1. This in turn sets TAUJnTE.TAUJnTEm = 1, enabling count operation. The counter TAUJnCNTm starts counting up from 0000 0000_H. When a valid TAUJnTTINm edge is detected, the value of TAUJnCNTm is captured, transferred to TAUJnCDRm, and an interrupt INTTAUJnIm is generated. The counter resets to 0000 0000_H and subsequently continues operation.

If the counter reaches FFFF $FFFF_H$ before a valid TAUJnTTINm edge is detected, it overflows. The counter is reset to 0000 0000_H and subsequently continues operation. The values transferred to TAUJnCDRm and TAUJnCSRm.TAUJnOVF respectively depend on the values of bits TAUJnCMORm.TAUJnCOS[1:0]:

Table 24.44 Effects of an Overflow

	When overflow occurs		When a valid TAUJnTTINm input is then detected	
TAUJnCMORm. TAUJnCOS[1:0]	**TAUJnCDRm**	**TAUJnCSRm. TAUJnOVF**	**TAUJnCDRm and TAUJnCNTm**	**TAUJnCSRm. TAUJnOVF**
00	Unchanged	0	TAUJnCNTm written to TAUJnCDRm	1
01		1		
10	Set to FFFF $FFFF_H$	0	TAUJnCNTm set to 0, TAUJnCDRm unchanged	Unchanged
11		1		

If an overflow is set (TAUJnCSRm.TAUJnOVF = 1) when TAUJnCMORm.TAUJnCOS[0] = 1, it can only be cleared by setting TAUJnCSCm.TAUJnCLOV = 1.

The combination of the value of TAUJnCDRm and TAUJnCSRm.TAUJnOVF can be used to deduce the interval of the TAUJnTTINm signal. However, if an overflow occurs multiple times before a valid TAUJnTTINm input is detected, the overflow bit TAUJnCSRm.TAUJnOVF cannot indicate this.

The function can be stopped by setting TAUJnTT.TAUJnTTm = 1, which in turn sets TAUJnTE.TAUJnTEm = 0. TAUJnCNTm stops but retains its value. While the function is stopped, TAUJnTTINm input valid edge detection and TAUJnCNTm capture are not performed.

Conditions

If the TAUJnCMORm.TAUJnMD0 bit is set to 0, the first interrupt after a start or restart is not generated. For details refer to **Section 24.9, TAUJnTTOUTm Output and INTTAUJnIm Generation when Counter Starts or Restarts**.

NOTE

When TAUJnCMORm.TAUJnCOS[1] = 1, the value of TAUJnCNTm is not written to TAUJnCDRm when the first valid TAUJnTTINm input edge occurs after an overflow. However, an interrupt is generated.

24.12.3.2 Equations

TAUJnTTINm input pulse interval = count clock cycle × [(TAUJnCSRm.TAUJnOVF × (FFFF $FFFF_H$ + 1)) + TAUJnCDRm capture value + 1]

24.12.3.3 Block Diagram and General Timing Diagram

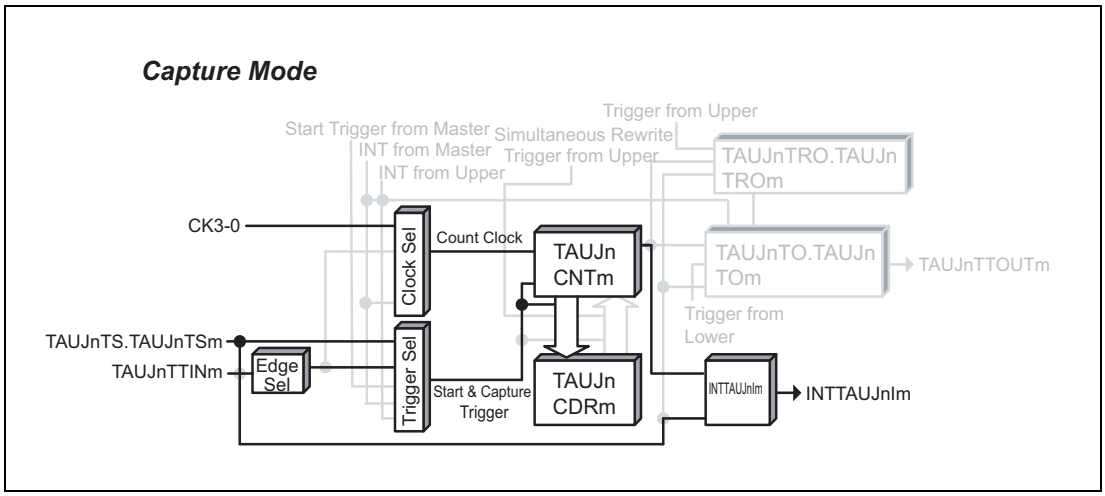

Figure 24.23 Block Diagram for TAUJnTTINm Input Pulse Interval Measurement Function

The following settings apply to the general timing diagram:

- INTTAUJnIm not generated at operation start (TAUJnCMORm.TAUJnMD0 = 0)
- Falling edge detection (TAUJnCMURm.TAUJnTIS[1:0] = 00_B)
- When a valid TAUJnTTINm input is detected after an overflow, TAUJnCDRm is changed and TAUJnCSRm.TAUJnOVF is set to 1 (TAUJnCMORm.TAUJnCOS[1:0] = 00_B)

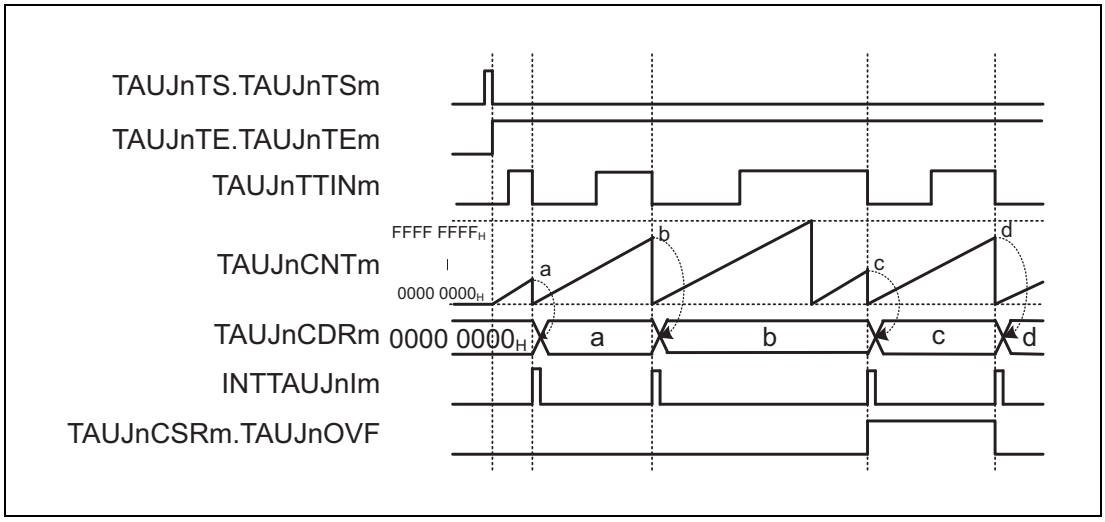

Figure 24.24 General Timing Diagram for TAUJnTTINm Input Pulse Interval Measurement Function

24.12.3.4 Register Settings

(1) TAUJnCMORm

Bit	15	14	13	12	11	10	9	8	7	6	5	4	3	2	1	0
	TAUJnCKS[1:0]		TAUJnCCS[1:0]		TAUJnMAS	TAUJnSTS[2:0]			TAUJnCOS[1:0]		—	TAUJnMD[4:1]				TAUJnMD0
Value after reset	0	0	0	0	0	0	0	0	0	0	0	0	0	0	0	0
R/W	R/W	R/W	R/W	R/W	R/W	R/W	R/W	R/W	R/W	R/W	R	R/W	R/W	R/W	R/W	R/W

Table 24.45 Contents of the TAUJnCMORm register for TAUJnTTINm Input Pulse Interval Measurement Function

Bit Position	Bit Name	Function
15, 14	TAUJnCKS[1:0]	Selects an operating clock. 00: Prescaler output CK0 01: Prescaler output CK1 10: Prescaler output CK2 11: Prescaler output CK3
13, 12	TAUJnCCS[1:0]	Write 00_B.
11	TAUJnMAS	Write 0_B.
10 to 8	TAUJnSTS[2:0]	Write 001_B.
7, 6	TAUJnCOS[1:0]	See **Table 24.44, Effects of an Overflow**
5	Reserved	When writing, write the value after reset.
4 to 1	TAUJnMD[4:1]	Write 0010_B.
0	TAUJnMD0	0: INTTAUJnIm not generated at operation start 1: Generates INTTAUJnIm at operation start

(2) TAUJnCMURm

Bit	7	6	5	4	3	2	1	0
	—	—	—	—	—	—	TAUJnTIS[1:0]	
Value after reset	0	0	0	0	0	0	0	0
R/W	R	R	R	R	R	R	R/W	R/W

Table 24.46 Contents of the TAUJnCMURm register for TAUJnTTINm Input Pulse Interval Measurement Function

Bit Position	Bit Name	Function
7 to 2	Reserved	When writing, write the value after reset.
1, 0	TAUJnTIS[1:0]	00: Falling edge detection 01: Rising edge detection 10: Rising and falling edge detection 11: Setting prohibited

(3) Channel output mode

TAUJnTOE.TAUJnTOEm is set to 0 because the channel output mode is not used by this function.

(4) Simultaneous rewrite

The simultaneous rewrite registers (TAUJnRDE and TAUJnRDM) cannot be used with the TAUJnTTINm Input Pulse Interval Measurement Function. Therefore, these registers must be set to 0.

Table 24.47 Simultaneous Rewrite Settings for TAUJnTTINm Input Pulse Interval Measurement Function

Bit name	Setting
TAUJnRDE.TAUJnRDEm	0: Disables simultaneous rewrite
TAUJnRDM.TAUJnRDMm	0: When simultaneous rewrite is disabled (TAUJnRDE.TAUJnRDEm = 0), set these bits to 0

24.12.3.5 Operating Procedure for TAUJnTTINm Input Pulse Interval Measurement Function

Table 24.48 Operating Procedure for TAUJnTTINm Input Pulse Interval Measurement Function

	Operation	Status of TAUJn
Initial channel setting	Set the TAUJnCMORm register and TAUJnCMURm registers as described in **Table 24.45, Contents of the TAUJnCMORm register for TAUJnTTINm Input Pulse Interval Measurement Function** and **Table 24.46, Contents of the TAUJnCMURm register for TAUJnTTINm Input Pulse Interval Measurement Function**. The TAUJnCDRm register operates as a capture register.	Channel operation is stopped.
Start operation	Set TAUJnTS.TAUJnTSm to 1. TAUJnTS.TAUJnTSm is a trigger bit, so it is automatically cleared to 0.	TAUJnTE.TAUJnTEm is set to 1 and the counter starts. TAUJnCNTm is cleared to 0000 0000_H. INTTAUJnIm is generated when TAUJnCMORm.TAUJnMD0 is set to 1.
During operation	Detection of TAUJnTTINm edges. The TAUJnCMURm. TAUJnTIS[1:0] bits can be changed at any time. The TAUJnCDRm and TAUJnCSRm registers can be read at any time. TAUJnCSCm.TAUJnCLOV bit can be written to 1. (TAUJnCSRm.TAUJnOVF bit is cleared to 0.)	TAUJnCNTm starts to count up from 0000 0000_H. When a TAUJnTTINm valid edge is detected: • TAUJnCNTm transfers (captures) its value to TAUJnCDRm, and returns to 0000 0000_H • INTTAUJnIm is then generated. Afterwards, this procedure is repeated.
Stop operation	Set TAUJnTT.TAUJnTTm to 1. TAUJnTT.TAUJnTTm is a trigger bit, so it is automatically cleared to 0.	TAUJnTE.TAUJnTEm is cleared to 0 and the counter stops. TAUJnCNTm stops and both it and TAUJnCSRm.TAUJnOVF retain their current values.

Restart

24.12.3.6 Specific Timing Diagrams: Overflow Behavior

(1) TAUJnCMORm.TAUJnCOS[1:0] = 00_B

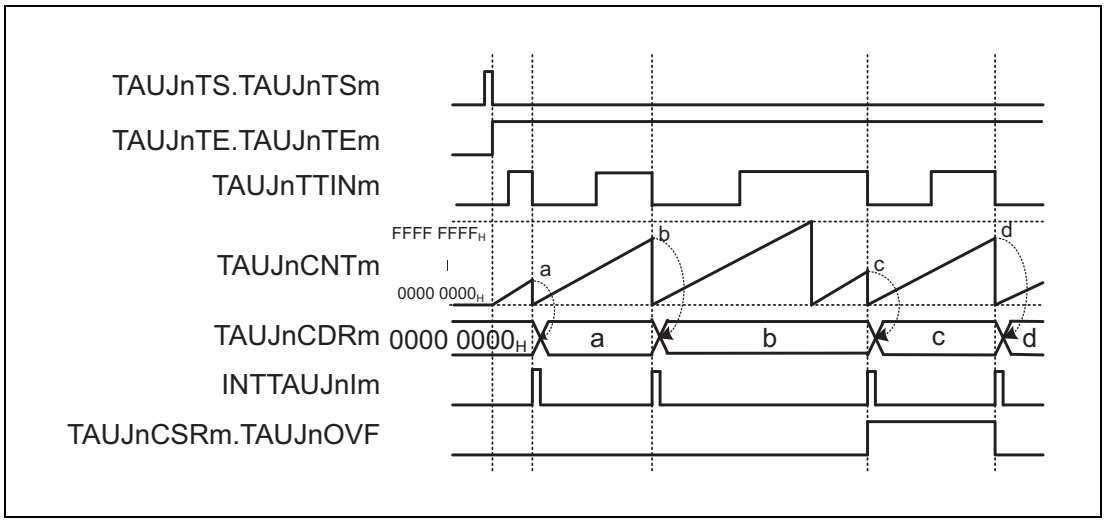

Figure 24.25 TAUJnCMORm.TAUJnCOS[1:0] = 00_B, TAUJnCMORm.TAUJnMD0 = 0, TAUJnCMURm.TAUJnTIS[1:0] = 00_B

- When an overflow occurs, the value of TAUJnCDRm remains unchanged and TAUJnCSRm.TAUJnOVF remains = 0.
- Upon detection of the next valid TAUJnTTINm input edge, the value of TAUJnCNTm is written to TAUJnCDRm and TAUJnCSRm.TAUJnOVF is set to 1.
- If the next valid TAUJnTTINm input edge is detected when no overflow occurs, TAUJnCSRm.TAUJnOVF is cleared to 0.

(2) TAUJnCMORm.TAUJnCOS[1:0] = 01_B

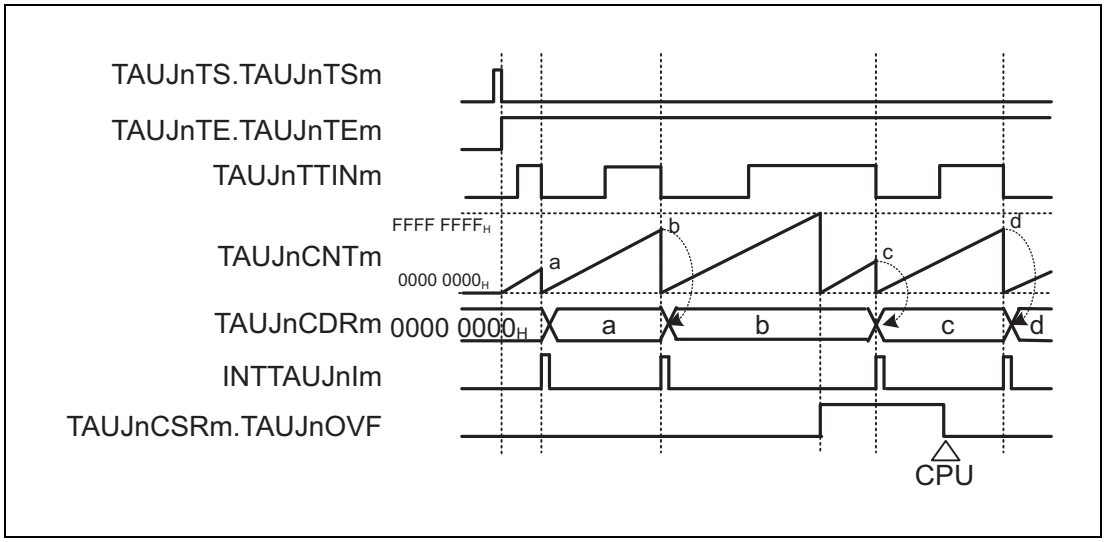

Figure 24.26 TAUJnCMORm.TAUJnCOS[1:0] = 01_B, TAUJnCMORm.TAUJnMD0 = 0, TAUJnCMURm.TAUJnTIS[1:0] = 00_B

- When an overflow occurs, the value of TAUJnCDRm remains unchanged and TAUJnCSRm.TAUJnOVF is set to 1.
- Upon detection of the next valid TAUJnTTINm input edge, the value of TAUJnCNTm is written to TAUJnCDRm.
- TAUJnCSRm.TAUJnOVF is only cleared by a CPU command (by setting the TAUJnCSCm.TAUJnCLOV bit to 1).

(3) TAUJnCMORm.TAUJnCOS[1:0] = 10_B

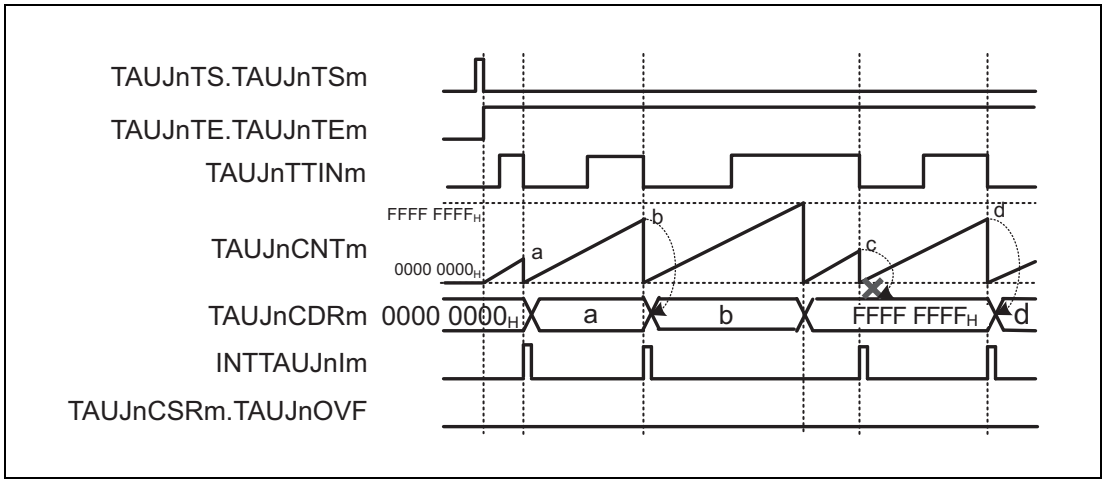

Figure 24.27 TAUJnCMORm.TAUJnCOS[1:0] = 10_B, TAUJnCMORm.TAUJnMD0 = 0, TAUJnCMURm.TAUJnTIS[1:0] = 00_B

- When an overflow occurs, TAUJnCDRm is set to FFFF $FFFF_H$ and TAUJnCSRm.TAUJnOVF remains = 0.
- Upon detection of the next valid TAUJnTTINm input edge, TAUJnCNTm is reset to 0, but TAUJnCDRm and TAUJnCSRm.TAUJnOVF remain unchanged.
- Thus, the next TAUJnTTINm input valid edge after the overflow is ignored.

(4) TAUJnCMORm.TAUJnCOS[1:0] = 11_B

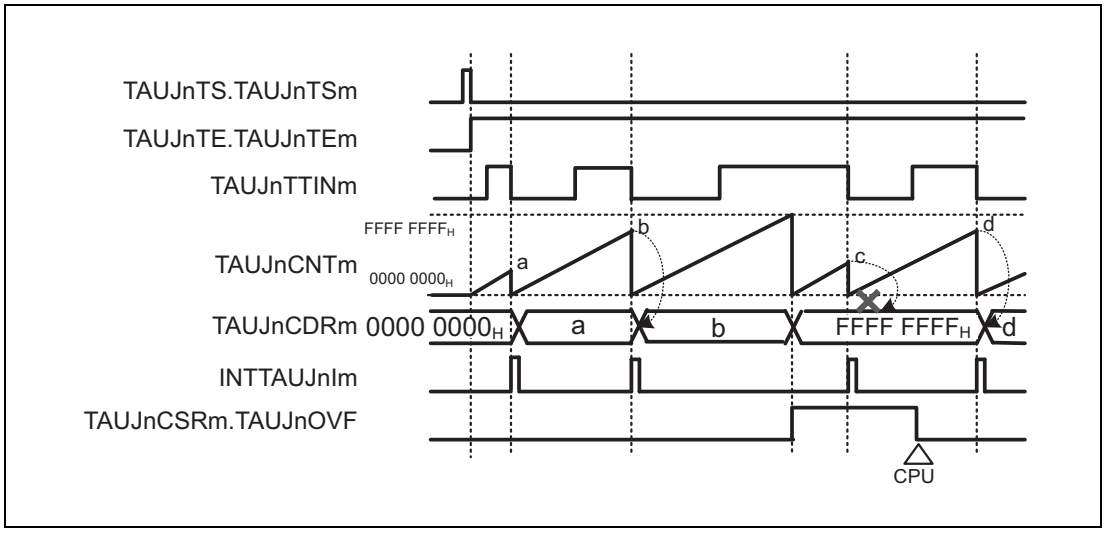

Figure 24.28 TAUJnCMORm.TAUJnCOS[1:0] = 11_B, TAUJnCMORm.TAUJnMD0 = 0, TAUJnCMURm.TAUJnTIS[1:0] = 00_B

- When an overflow occurs, TAUJnCDRm is set to FFFF $FFFF_H$, and TAUJnCSRm.TAUJnOVF is set to 1.
- Upon detection of the next valid TAUJnTTINm input edge, TAUJnCNTm is reset to 0, but TAUJnCDRm and TAUJnCSRm.TAUJnOVF remain unchanged.
- Thus, the next TAUJnTTINm input valid edge after the overflow is ignored.
- TAUJnCSRm.TAUJnOVF is cleared by setting the TAUJnCSCm.TAUJnCLOV bit to 1.

24.12.4 TAUJnTTINm Input Signal Width Measurement Function

24.12.4.1 Overview

Summary

This function measures the width of a TAUJnTTINm signal by starting counting on one edge of the TAUJnTTINm signal and capturing the counter value on the opposite edge.

Prerequisites

- The operation mode must be set to capture and one-count mode, refer to **Table 24.50, Contents of the TAUJnCMORm register for TAUJnTTINm Input Signal Width Measurement Function**.
- TAUJnTTOUTm is not used for this function
- TAUJnCMORm.TAUJnMD should be set to 0.

Description

The counter is enabled by setting the channel trigger bit (TAUJnTS.TAUJnTSm) to 1. This in turn sets TAUJnTE.TAUJnTEm = 1, enabling count operation. When a valid TAUJnTTINm start edge is detected, the counter TAUJnCNTm starts counting up from $0000\ 0000_H$. When a valid TAUJnTTINm stop edge is detected, the value of TAUJnCNTm is captured, transferred to TAUJnCDRm, and an interrupt INTTAUJnIm is generated. The counter retains its value and awaits the next valid TAUJnTTINm input start edge.

If the counter reaches $FFFF\ FFFF_H$ before a valid TAUJnTTINm stop edge is detected, it overflows. The counter is reset to $0000\ 0000_H$ and subsequently continues operation. The values transferred to TAUJnCDRm and TAUJnCSRm.TAUJnOVF respectively depend on the values of bits TAUJnCMORm.TAUJnCOS[1:0]:

Table 24.49 Effects of an overflow

	When overflow occurs		When a valid TAUJnTTINm input stop edge is detected	
TAUJnCMORm. TAUJnCOS[1:0]	**TAUJnCDRm**	**TAUJnCSRm. TAUJnOVF**	**TAUJnCDRm and TAUJnCNTm**	**TAUJnCSRm. TAUJnOVF**
00	Unchanged	0	TAUJnCNTm written to TAUJnCDRm	1
01		1		
10	Set to $FFFF\ FFFF_H$	0	TAUJnCNTm stops counting TAUJnCDRm unchanged	Unchanged
11		1		

If an overflow is set (TAUJnCSRm.OVF = 1) when TAUJnCMORm.TAUJnCOS[0] = 1, it can only be cleared by setting TAUJnCSCm.TAUJnCLOV = 1.

The combination of the value of TAUJnCDRm and TAUJnCSRm.TAUJnOVF can be used to deduce the width of the TAUJnTTINm signal. However, if an overflow occurs multiple times before a valid TAUJnTTINm input is detected, the overflow bit TAUJnCSRm.TAUJnOVF cannot indicate this.

This function cannot be forcibly restarted.

This function is not supported by forced restarting

NOTE

When TAUJnCMORm.TAUJnCOS[1] = 1, the value of TAUJnCNTm is not written to TAUJnCDRm when the first valid TAUJnTTINm input edge occurs after an overflow. However, an interrupt is generated.

24.12.4.2 Equations

TAUJnTTINm input signal width = count clock cycle × [(TAUJnCSRm.TAUJnOVF × (FFFF $FFFF_H$ + 1)) + TAUJnCDRm capture value + 1]

24.12.4.3 Block Diagram and General Timing Diagram

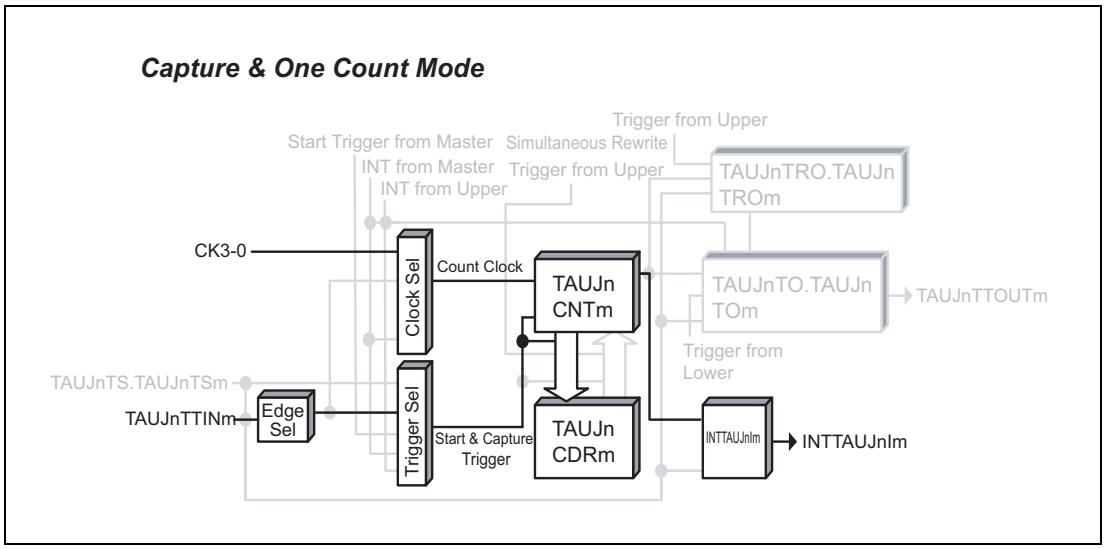

Figure 24.29 Block diagram for TAUJnTTINm Input Signal Width Measurement Function

The following settings apply to the general timing diagram:

- Rising and falling edge detection = high width measurement (TAUJnCMURm.TAUJnTIS[1:0] = 11_B)
- When a valid TAUJnTTINm input is detected after an overflow, TAUJnCDRm is changed and TAUJnCSRm.TAUJnOVF is set to 1 (TAUJnCMORm.TAUJnCOS[1:0] = 00_B)

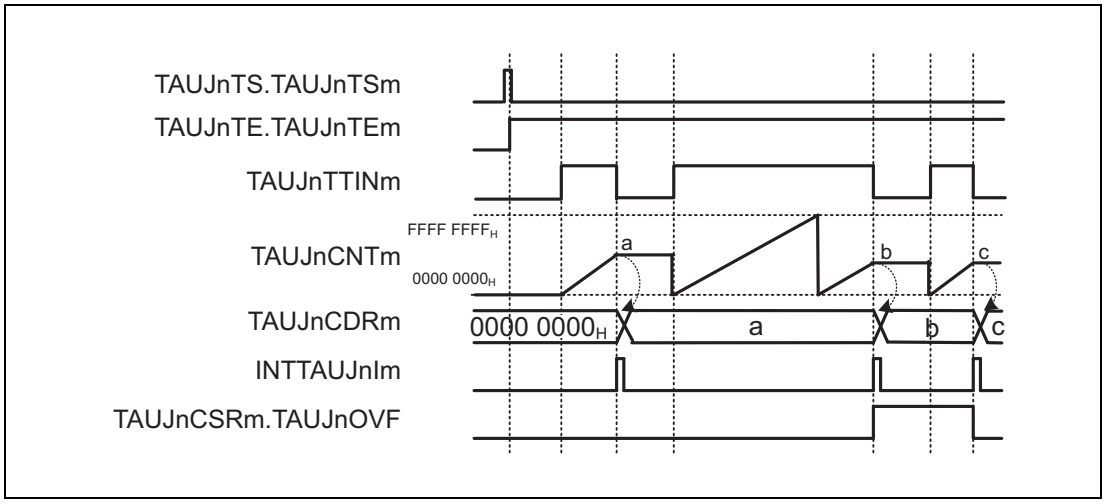

Figure 24.30 General Timing Diagram for TAUJnTTINm Input Signal Width Measurement Function

24.12.4.4 Register Settings

(1) TAUJnCMORm

Bit	15	14	13	12	11	10	9	8	7	6	5	4	3	2	1	0
	TAUJnCKS[1:0]		TAUJnCCS[1:0]		TAUJnMAS	TAUJnSTS[2:0]			TAUJnCOS[1:0]		—	TAUJnMD[4:1]				TAUJnMD0
Value after reset	0	0	0	0	0	0	0	0	0	0	0	0	0	0	0	0
R/W	R/W	R/W	R/W	R/W	R/W	R/W	R/W	R/W	R/W	R/W	R	R/W	R/W	R/W	R/W	R/W

Table 24.50 Contents of the TAUJnCMORm register for TAUJnTTINm Input Signal Width Measurement Function

Bit Position	Bit Name	Function
15, 14	TAUJnCKS[1:0]	Selects an operating clock. 00: Prescaler output CK0 01: Prescaler output CK1 10: Prescaler output CK2 11: Prescaler output CK3
13, 12	TAUJnCCS[1:0]	Write 00_B.
11	TAUJnMAS	Write 0_B.
10 to 8	TAUJnSTS[2:0]	Write 010_B.
7, 6	TAUJnCOS[1:0]	See **Table 24.49, Effects of an overflow**.
5	Reserved	When writing, write the value after reset.
4 to 1	TAUJnMD[4:1]	Write 0110_B.
0	TAUJnMD0	Write 0_B.

(2) TAUJnCMURm

Bit	7	6	5	4	3	2	1	0
	—	—	—	—	—	—	TAUJnTIS[1:0]	
Value after reset	0	0	0	0	0	0	0	0
R/W	R	R	R	R	R	R	R/W	R/W

Table 24.51 Contents of the TAUJnCMURm register for TAUJnTTINm Input Signal Width Measurement Function

Bit Position	Bit Name	Function
7 to 2	Reserved	When writing, write the value after reset.
1, 0	TAUJnTIS[1:0]	10: Rising and falling edge detection (low width measurement) 11: Rising and falling edge detection (high width measurement)

(3) Channel output mode

TAUJnTOE.TAUJnTOEm is set to 0 because the channel output mode is not used with this function.

(4) Simultaneous rewrite

The simultaneous rewrite registers (TAUJnRDE and TAUJnRDM) cannot be used with the TAUJnTTINm Input Signal Width Measurement Function. Therefore, these registers must be set to 0.

Table 24.52 Simultaneous Rewrite Settings for TAUJnTTINm Input Signal Width Measurement Function

Bit name	Setting
TAUJnRDE.TAUJnRDEm	0: Disables simultaneous rewrite
TAUJnRDM.TAUJnRDMm	0: When simultaneous rewrite is disabled (TAUJnRDE.TAUJnRDEm=0), set these bits to 0

24.12.4.5 Operating Procedure for TAUJnTTINm Input Signal Width Measurement Function

Table 24.53 Operating Procedure for TAUJnTTINm Input Signal Width Measurement Function

	Operation	Status of TAUJn
Initial channel setting	Set the TAUJnCMORm register and TAUJnCMURm registers as described in **Table 24.50, Contents of the TAUJnCMORm register for TAUJnTTINm Input Signal Width Measurement Function** and **Table 24.51, Contents of the TAUJnCMURm register for TAUJnTTINm Input Signal Width Measurement Function**. The TAUJnCDRm register operates as a capture register.	Channel operation is stopped.
Start operation	Set TAUJnTS.TAUJnTSm to 1. TAUJnTS.TAUJnTSm is a trigger bit, so it is automatically cleared to 0.	TAUJnTE.TAUJnTEm is set to 1 and TAUJnCNTm waits for detection of the TAUJnTTINm start edge. When a TAUJnTTINm start edge is detected, TAUJnCNTm starts to count up.
During operation	The TAUJnCDRm, TAUJnCNTm, and TAUJnCSRm registers can be read at any time. The TAUJnCSCm.TAUJnCLOV bit can be set to 1.	TAUJnCNTm starts to count up from 0000 0000_H. When a TAUJnTTINm valid edge is detected: • TAUJnCNTm transfers (captures) its value to TAUJnCDRm, and retains its value • INTTAUJnIm is then generated. • Counting stops at the “value transferred to TAUJnCDRm + 1” and TAUJnCNTm waits for detection of the TAUJnTTINm start edge. Afterwards, this procedure is repeated.
Stop operation	Set TAUJnTT.TAUJnTTm to 1. TAUJnTT.TAUJnTTm is a trigger bit, so it is automatically cleared to 0.	TAUJnTE.TAUJnTEm is cleared to 0 and the counter stops. TAUJnCNTm stops and both it and TAUJnCSRm.TAUJnOVF retain their current values.

Restart

24.12.4.6 Specific Timing Diagrams: Overflow Behavior

(1) TAUJnCMORm.TAUJnCOS[1:0] = 00_B

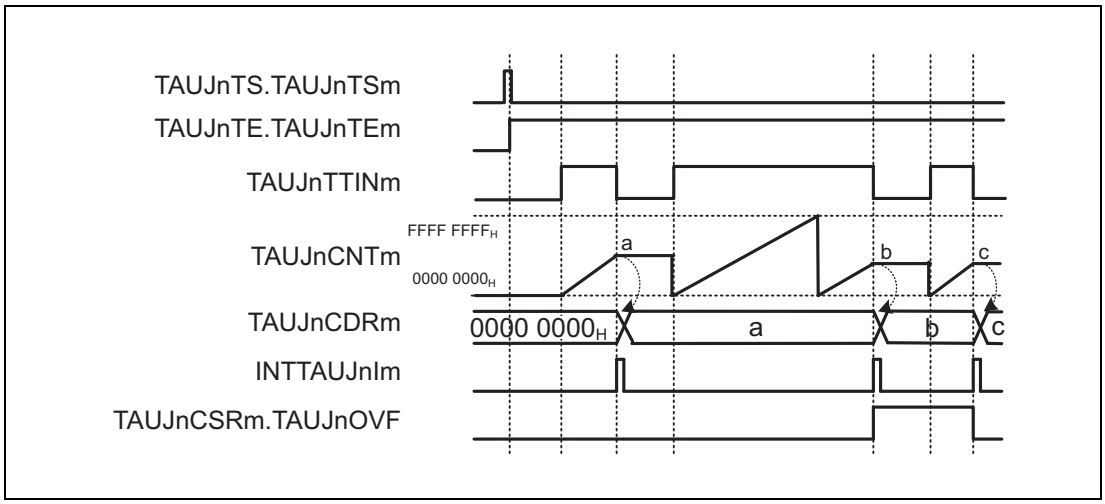

Figure 24.31 TAUJnCMORm.TAUJnCOS[1:0] = 00_B, TAUJnCMORm.TAUJnMD0 = 0, TAUJnCMURm.TAUJnTIS[1:0] = 11_B

- When an overflow occurs, the value of TAUJnCDRm remains unchanged and TAUJnCSRm.TAUJnOVF remains = 0.
- Upon detection of the next valid TAUJnTTINm input edge, the value of TAUJnCNTm is written to TAUJnCDRm and TAUJnCSRm.TAUJnOVF is set to 1.
- Upon detection of the next valid TAUJnTTINm input edge with no overflow occurring, TAUJnCSRm.TAUJnOVF is cleared to 0.

(2) TAUJnCMORm.TAUJnCOS[1:0] = 01_B

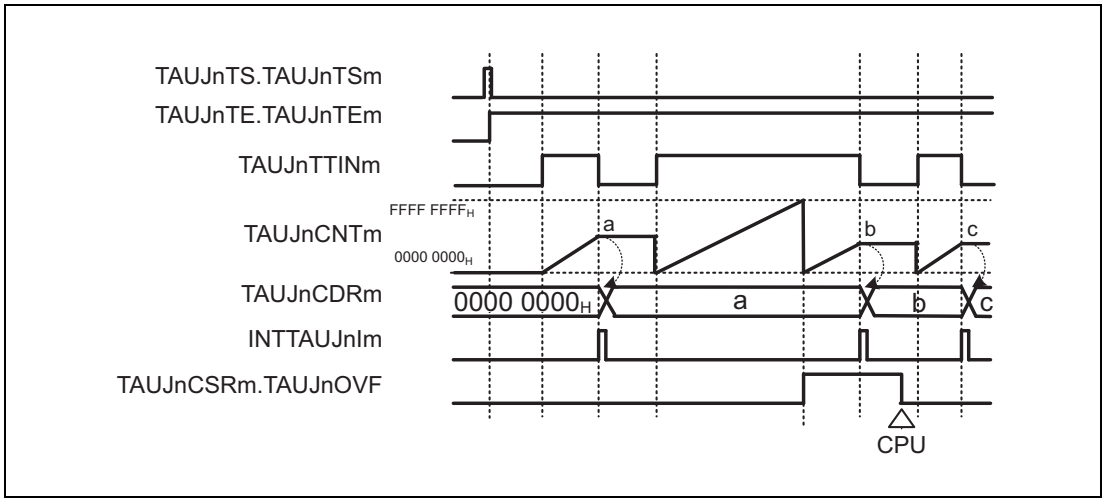

Figure 24.32 TAUJnCMORm.TAUJnCOS[1:0] = 01_B, TAUJnCMORm.TAUJnMD0 = 0, TAUJnCMURm.TAUJnTIS[1:0] = 11_B

- When an overflow occurs, the value of TAUJnCDRm remains unchanged and TAUJnCSRm.TAUJnOVF is set to 1.
- Upon detection of the next valid TAUJnTTINm input edge, the value of TAUJnCNTm is written to TAUJnCDRm.
- TAUJnCSRm.TAUJnOVF is only cleared by a CPU command (by setting TAUJnCSCm.TAUJnCLOV bit = 1).

(3) TAUJnCMORm.TAUJnCOS[1:0] = 10_B

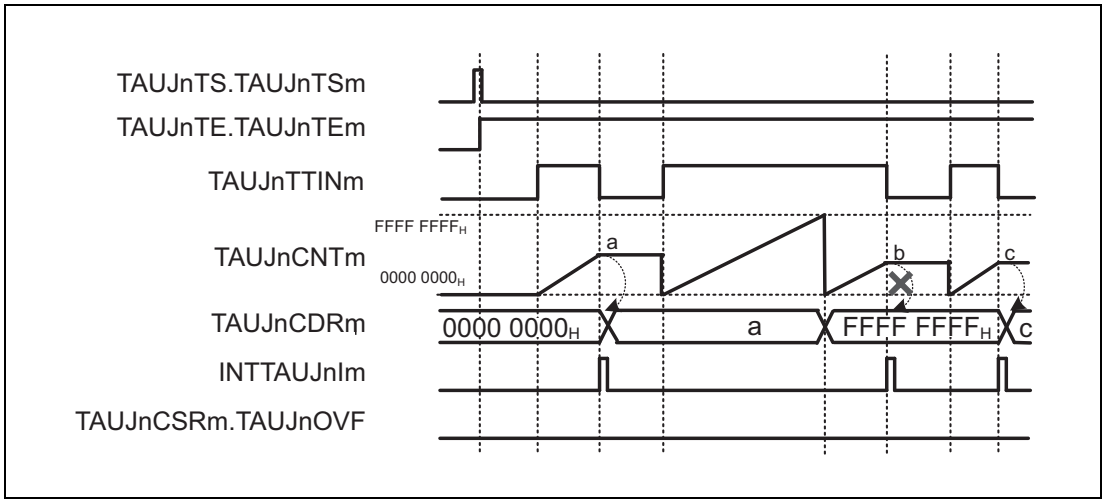

Figure 24.33 TAUJnCMORm.TAUJnCOS[1:0] = 10_B, TAUJnCMORm.TAUJnMD0 = 0, TAUJnCMURm.TAUJnTIS[1:0] = 11_B

- When an overflow occurs, TAUJnCDRm is set to FFFF $FFFF_H$ and TAUJnCSRm.TAUJnOVF remains = 0.
- Upon detection of the next valid TAUJnTTINm input edge, TAUJnCNTm stops counting, but TAUJnCDRm and TAUJnCSRm.TAUJnOVF remain unchanged.
- Thus, the next TAUJnTTINm input valid edge after the overflow is ignored.

(4) TAUJnCMORm.TAUJnCOS[1:0] = 11_B

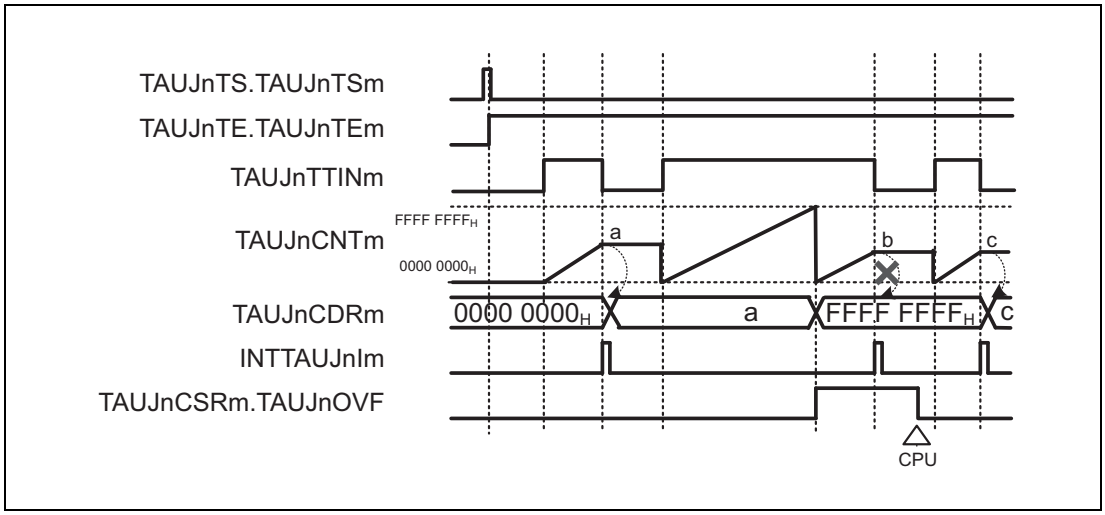

Figure 24.34 TAUJnCMORm.TAUJnCOS[1:0] = 11_B, TAUJnCMORm.TAUJnMD0 = 0, TAUJnCMURm.TAUJnTIS[1:0] = 11_B

- When an overflow occurs, TAUJnCDRm is set to FFFF $FFFF_H$, and TAUJnCSRm.TAUJnOVF is set to 1.
- Upon detection of the next valid TAUJnTTINm input edge, TAUJnCNTm stops counting, but TAUJnCDRm and TAUJnCSRm.TAUJnOVF remain unchanged.
- Thus, the next TAUJnTTINm input valid edge after the overflow is ignored.
- TAUJnCSRm.TAUJnOVF is cleared by setting the TAUJnCSCm.TAUJnCLOV bit to 1.

24.12.5 TAUJnTTINm Input Position Detection Function

24.12.5.1 Overview

Summary

This function measures the interval of an input signal by capturing the counter value on a valid edge of the TAUJnTTINm signal.

Prerequisites

- The operation mode must be set to count capture mode, refer to **Table 24.54, Contents of the TAUJnCMORm register for TAUJnTTINm Input Position Detection Function**.
- TAUJnTTOUTm is not used for this function

Description

The counter is enabled by setting the channel trigger bit (TAUJnTS.TAUJnTSm) to 1. This in turn sets TAUJnTE.TAUJnTEm = 1, enabling count operation. The counter starts to count from $0000\ 0000_H$. When a valid TAUJnTTINm input edge is detected, the current TAUJnCNTm value is written to TAUJnCDRm and an interrupt (INTTAUJnIm) is generated. The counter continues to count.

When the counter reaches $FFFF\ FFFF_H$, it restarts from $0000\ 0000_H$.

NOTE

The TAUJnTTINm input signal is sampled at the frequency of the operation clock specified by the TAUJnCMORm.TAUJnCKS[1:0] bits. As a result, the output cycle of the TAUJnTTOUTm has an error of ±1 operation clock cycle.

Conditions

If the TAUJnCMORm. TAUJnMD0 bit is set to 0, the first interrupt after a start or restart is not generated. For the detail, see **Section 24.9, TAUJnTTOUTm Output and INTTAUJnIm Generation when Counter Starts or Restarts**.

24.12.5.2 Equations

Function duration at a TAUJnTTINm input pulse =
count clock cycle × (TAUJnCDRm capture value + 1)

24.12.5.3 Block Diagram and General Timing Diagram

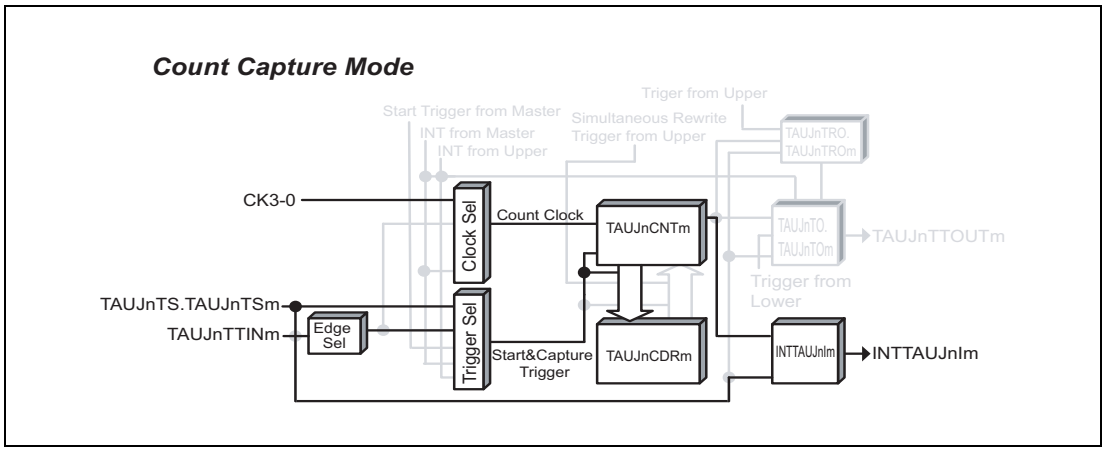

Figure 24.35 Block Diagram of TAUJnTTINm Input Position Detection Function

The following settings apply to the general timing diagram:

- INTTAUJnIm not generated at operation start (TAUJnCMORm.TAUJnMD0 = 0)
- Falling edge detection (TAUJnCMURm.TAUJnTIS[1:0] = 00_B)

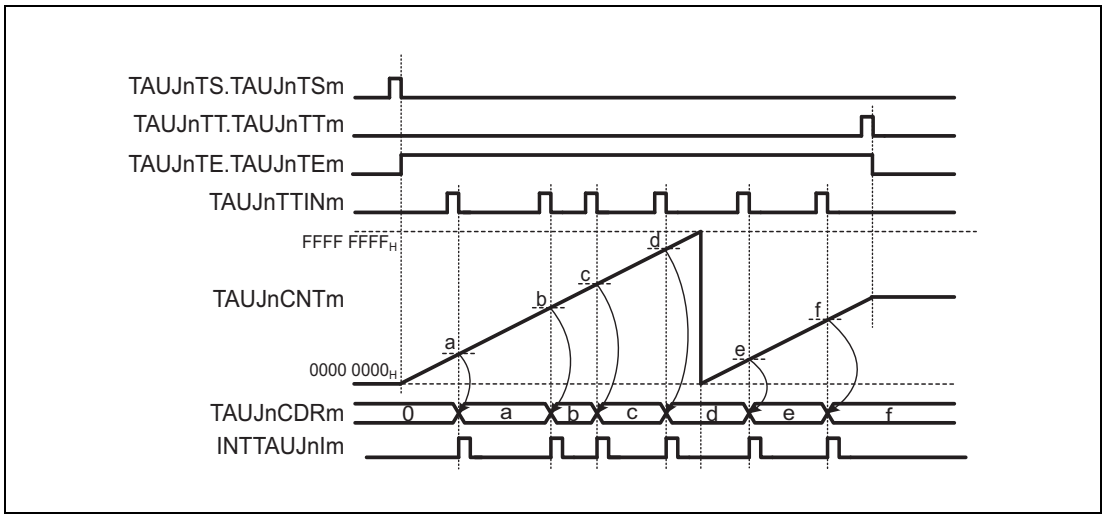

Figure 24.36 General Timing Diagram for TAUJnTTINm Input Position Detection Function

24.12.5.4 Register Settings

(1) TAUJnCMORm

Bit	15	14	13	12	11	10	9	8	7	6	5	4	3	2	1	0
	TAUJnCKS[1:0]		TAUJnCCS[1:0]		TAUJn MAS	TAUJnSTS[2:0]			TAUJnCOS[1:0]		—	TAUJnMD[4:1]				TAUJn MD0
Value after reset	0	0	0	0	0	0	0	0	0	0	0	0	0	0	0	0
R/W	R/W	R/W	R/W	R/W	R/W	R/W	R/W	R/W	R/W	R/W	R	R/W	R/W	R/W	R/W	R/W

Table 24.54 Contents of the TAUJnCMORm register for TAUJnTTINm Input Position Detection Function

Bit Position	Bit Name	Function
15, 14	TAUJnCKS[1:0]	Selects an operating clock. 00: Prescaler output CK0 01: Prescaler output CK1 10: Prescaler output CK2 11: Prescaler output CK3
13, 12	TAUJnCCS[1:0]	Write 00_B.
11	TAUJnMAS	Write 0_B.
10 to 8	TAUJnSTS[2:0]	Write 001_B.
7, 6	TAUJnCOS[1:0]	Write 01_B.
5	Reserved	When writing, write the value after reset.
4 to 1	TAUJnMD[4:1]	Write 1011_B.
0	TAUJnMD0	0: INTTAUJnIm not generated at operation start 1: Generates INTTAUJnIm at operation start

(2) TAUJnCMURm

Bit	7	6	5	4	3	2	1	0
	—	—	—	—	—	—	TAUJnTIS[1:0]	
Value after reset	0	0	0	0	0	0	0	0
R/W	R	R	R	R	R	R	R/W	R/W

Table 24.55 Contents of the TAUJnCMURm register for TAUJnTTINm Input Position Detection Function

Bit Position	Bit Name	Function
7 to 2	Reserved	When writing, write the value after reset.
1, 0	TAUJnTIS[1:0]	00: Falling edge detection 01: Rising edge detection 10: Rising and falling edge detection

(3) Channel output mode

The channel output mode is not used by this function.

(4) Simultaneous rewrite

The simultaneous rewrite registers (TAUJnRDE and TAUJnRDM) cannot be used with the TAUJnTTINm Input Position Detection Function. Therefore, these registers must be set to 0.

Table 24.56 Simultaneous Rewrite Settings for TAUJnTTINm Input Period Count Detection Function

Bit name	Setting
TAUJnRDE.TAUJnRDEm	0: Disables simultaneous rewrite
TAUJnRDM.TAUJnRDMm	0: When simultaneous rewrite is disabled (TAUJnRDE.TAUJnRDEm=0), set these bits to 0

24.12.5.5 Operating Procedure for TAUJnTTINm Input Position Detection Function

Table 24.57 Operating Procedure for TAUJnTTINm Input Position Detection Function

		Operation	Status of TAUJn
	Initial channel setting	Set the TAUJnCMORm register and TAUJnCMURm registers as described in **Table 24.54, Contents of the TAUJnCMORm register for TAUJnTTINm Input Position Detection Function** and **Table 24.55, Contents of the TAUJnCMURm register for TAUJnTTINm Input Position Detection Function**. The TAUJnCDRm register operates as a capture register.	Channel operation is stopped.
Restart	Start operation	Set TAUJnTS.TAUJnTSm to 1. TAUJnTS.TAUJnTSm is a trigger bit, so it is automatically cleared to 0.	TAUJnTE.TAUJnTEm is set to 1 and the counter starts. INTTAUJnIm is generated when TAUJnCMORm.TAUJnMD0 is set to 1.
	During operation	The TAUJnCMURm.TAUJnTIS[1:0] bits can be changed at any time. The TAUJnCDRm and TAUJnCSRm registers can be read at any time.	TAUJnCNTm starts to count up from 0000 0000_H. When a TAUJnTTINm valid edge is detected: • TAUJnCNTm transfers (captures) its value to TAUJnCDRm • INTTAUJnIm is output. • The counter value is not cleared to 0000 0000_H and TAUJnCNTm continues count operation. Afterwards, this procedure is repeated. If the TAUJnCNTm reaches FFFF $FFFF_H$, it restarts counting from 0000 0000_H.
	Stop operation	Set TAUJnTT.TAUJnTTm to 1. TAUJnTT.TAUJnTTm is a trigger bit, so it is automatically cleared to 0.	TAUJnTE.TAUJnTEm is cleared to 0 and the counter stops. TAUJnCNTm stops and retains its current value.

24.12.5.6 Specific Timing Diagrams

(1) Operation stop and restart

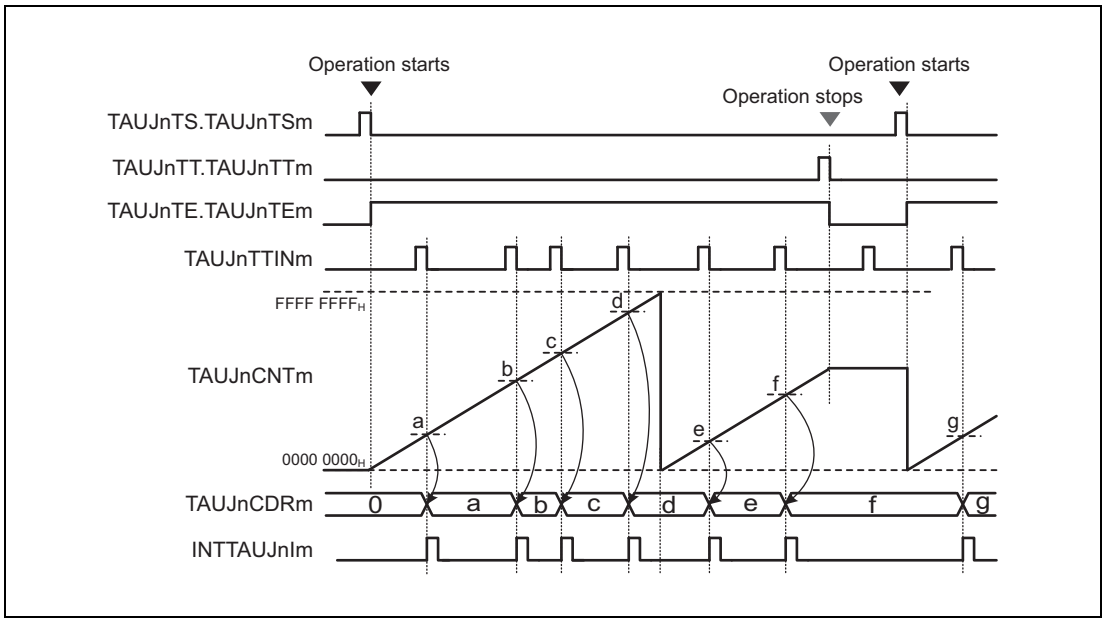

Figure 24.37 Operation Stop and Restart, TAUJnCMORm.TAUJnMD0 = 0, TAUJnCMURm.TAUJnTIS[1:0] = 00_B

- The counter can be stopped by setting TAUJnTT.TAUJnTTm to 1, which in turn sets TAUJnTE.TAUJnTEm to 0.
- TAUJnCNTm stops and the current value is retained.
- If the counter is stopped, valid TAUJnTTINm input edges are ignored.
- The counter can be restarted by setting TAUJnTS.TAUJnTSm to 1. TAUJnCNTm restarts to count from $0000\ 0000_H$.

24.12.6 TAUJnTTINm Input Period Count Detection Function

24.12.6.1 Overview

Summary

This function measures the cumulative width of a TAUJnTTINm input signal.

Prerequisites

- The operation mode must be set to capture and gate count mode, refer to **Table 24.58, Contents of the TAUJnCMORm Register for TAUJnTTINm Input Period Count Detection Function**.
- TAUJnTTOUTm is not used for this function.

Description

The counter is enabled by setting the channel trigger bit (TAUJnTS.TAUJnTSm) to 1. This in turn sets TAUJnTE.TAUJnTEm = 1, enabling count operation. The counter awaits a valid TAUJnTTINm input edge.

When a valid TAUJnTTINm input start edge is detected, the counter starts to count from $0000\ 0000_H$.

When a valid TAUJnTTINm input stop edge is detected, the current TAUJnCNTm value is written to TAUJnCDRm and an interrupt (INTTAUJnIm) is generated. The counter stops and retains its value until the next valid TAUJnTTINm input start edge is detected.

When the next valid TAUJnTTINm input start edge is detected, the counter restarts counting from the stop value.

If the counter reaches $FFFF\ FFFF_H$ the counter restarts from $0000\ 0000_H$.

In this function, a forced restart cannot be performed.

NOTE

The TAUJnTTINm input signal is sampled at the frequency of the operating clock, specified by the TAUJnCMORm.TAUJnCKS[1:0] bits.

Conditions

The valid start and stop edges are specified by the TAUJnCMURm.TAUJnTIS[1:0] bits:

- If TAUJnCMURm.TAUJnTIS[1:0] = 10_B, the TAUJnTTINm input low period is counted. The start trigger is a falling edge and the stop trigger is a rising edge.
- If TAUJnCMURm.TIS[1:0] = 11_B, the TAUJnTTINm input high period is counted. The start trigger is a rising edge and the stop trigger is a falling edge.

24.12.6.2 Equations

Cumulative TAUJnTTINm input width =
count clock cycle × (TAUJnCDRm capture value + 1)

24.12.6.3 Block Diagram and General Timing Diagram

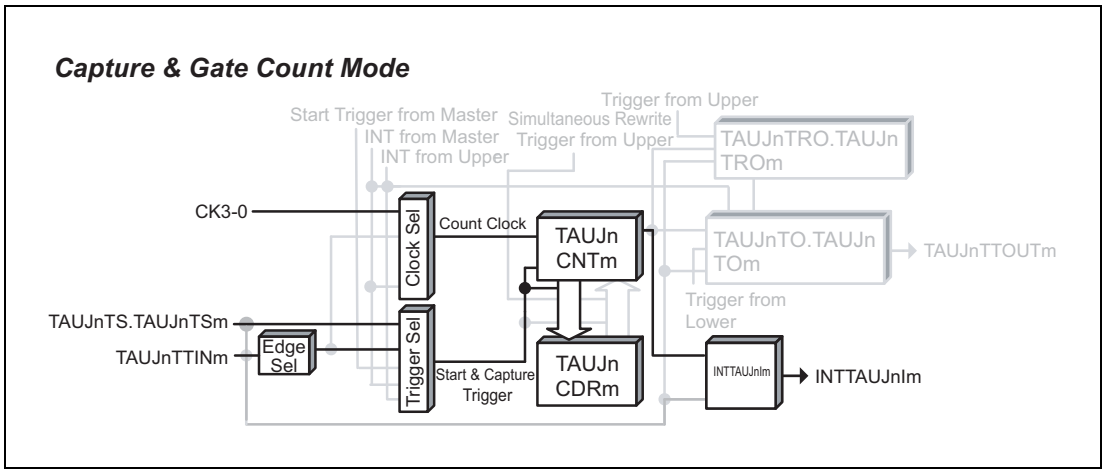

Figure 24.38 Block diagram for TAUJnTTINm Input Period Count Detection Function

The following settings apply to the general timing diagram:

- Rising and falling edge detection = high width measurement (TAUJnCMURm.TAUJnTIS[1:0] = 11_B)

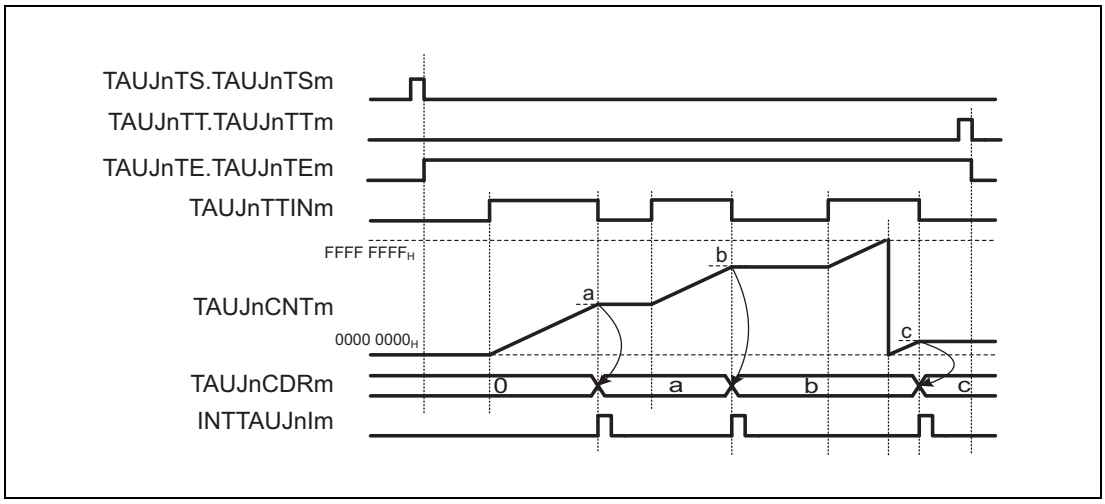

Figure 24.39 General Timing Diagram for TAUJnTTINm Input Period Count Detection Function

24.12.6.4 Register Settings

(1) TAUJnCMORm

Bit	15	14	13	12	11	10	9	8	7	6	5	4	3	2	1	0
	TAUJnCKS[1:0]		TAUJnCCS[1:0]		TAUJnMAS	TAUJnSTS[2:0]			TAUJnCOS[1:0]		—	TAUJnMD[4:1]				TAUJnMD0
Value after reset	0	0	0	0	0	0	0	0	0	0	0	0	0	0	0	0
R/W	R/W	R/W	R/W	R/W	R/W	R/W	R/W	R/W	R/W	R/W	R	R/W	R/W	R/W	R/W	R/W

Table 24.58 Contents of the TAUJnCMORm Register for TAUJnTTINm Input Period Count Detection Function

Bit Position	Bit Name	Function
15, 14	TAUJnCKS[1:0]	Selects an operating clock. 00: Prescaler output CK0 01: Prescaler output CK1 10: Prescaler output CK2 11: Prescaler output CK3
13, 12	TAUJnCCS[1:0]	Write 00_B.
11	TAUJnMAS	Write 0_B.
10 to 8	TAUJnSTS[2:0]	Write 010_B.
7, 6	TAUJnCOS[1:0]	Write 01_B.
5	Reserved	When writing, write the value after reset.
4 to 1	TAUJnMD[4:1]	Write 1101_B.
0	TAUJnMD0	Write 0_B.

(2) TAUJnCMURm

Bit	7	6	5	4	3	2	1	0
	—	—	—	—	—	—	TAUJnTIS[1:0]	
Value after reset	0	0	0	0	0	0	0	0
R/W	R	R	R	R	R	R	R/W	R/W

Table 24.59 Contents of the TAUJnCMURm Register for TAUJnTTINm Input Period Count Detection Function

Bit Position	Bit Name	Function
7 to 2	Reserved	When writing, write the value after reset.
1, 0	TAUJnTIS[1:0]	10: Rising and falling edge detection (Low width measurement) 11: Rising and falling edge detection (High width measurement)

(3) Channel output mode

TAUJnTOE.TAUJnTOEm is set to 0 because the channel output mode is not used with this function.

(4) Simultaneous rewrite

The simultaneous rewrite registers (TAUJnRDE and TAUJnRDM) cannot be used with the TAUJnTTINm Input Period Count Detection Function. Therefore, these registers must be set to 0.

Table 24.60 Simultaneous Rewrite Settings for TAUJnTTINm Input Period Count Detection Function

Bit name	Setting
TAUJnRDE.TAUJnRDEm	0: Disables simultaneous rewrite
TAUJnRDM.TAUJnRDMm	0: When simultaneous rewrite is disabled (TAUJnRDE.TAUJnRDEm=0), set these bits to 0

24.12.6.5 Operating Procedure for TAUJnTTINm Input Period Count Detection Function

Table 24.61 Operating Procedure for TAUJnTTINm Input Period Count Detection Function

	Operation	Status of TAUJn
Initial channel setting	Set the TAUJnCMORm register and TAUJnCMURm registers as described in **Table 24.58, Contents of the TAUJnCMORm Register for TAUJnTTINm Input Period Count Detection Function** and **Table 24.59, Contents of the TAUJnCMURm Register for TAUJnTTINm Input Period Count Detection Function**. The TAUJnCDRm register operates as a capture register.	Channel operation is stopped.
Start operation	Set TAUJnTS.TAUJnTSm to 1. TAUJnTS.TAUJnTSm is a trigger bit, so it is automatically cleared to 0.	TAUJnTE.TAUJnTEm is set to 1 and TAUJnCNTm waits for detection of the TAUJnTTINm start edge.
During operation	TAUJnTTINm edge detection The TAUJnCDRm, TAUJnCNTm, and TAUJnCSRm registers can be read at any time.	When a TAUJnTTINm start edge (rising edge for high width measurement, falling edge for low width measurement) is detected, TAUJnCNTm starts to count up from the stop value. When TAUJnCNTm detects a stop edge (falling edge for high width measurement, rising edge for low width measurement), it transfers the value to TAUJnCDRm and INTTAUJnIm is generated. Counting stops at the “value transferred to TAUJnCDRm + 1” and TAUJnCNTm waits for detection of the TAUJnTTINm start edge. If the TAUJnCNTm reaches FFFF $FFFF_H$, it restarts counting from 0000 0000_H. Afterwards, this procedure is repeated.
Stop operation	Set TAUJnTT.TAUJnTTm to 1. TAUJnTT.TAUJnTTm is a trigger bit, so it is automatically cleared to 0.	TAUJnTE.TAUJnTEm is cleared to 0 and the counter stops. TAUJnCNTm stops and retains its current value.

Restart

24.12.6.6 Specific Timing Diagrams

(1) Operation stop and restart

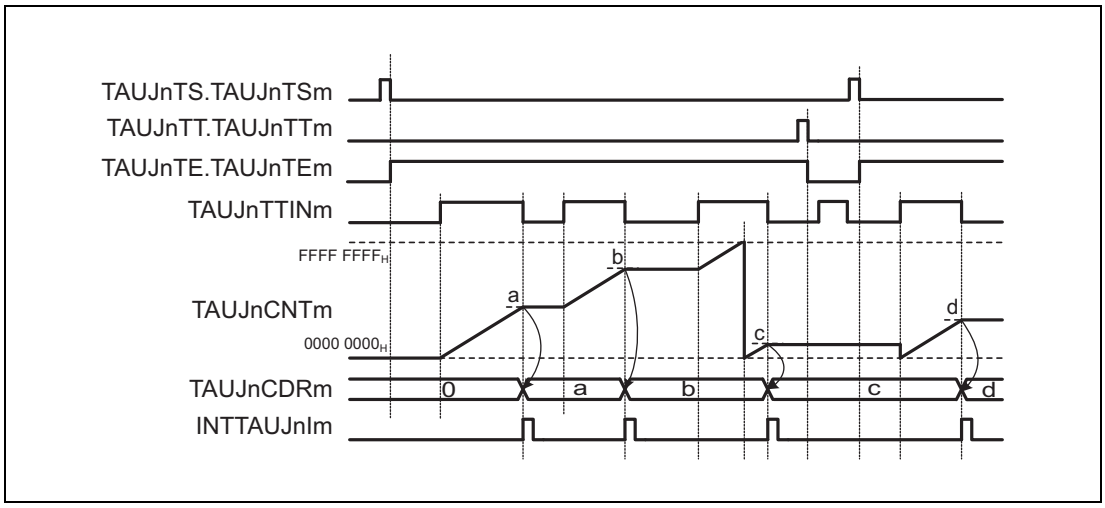

Figure 24.40 Operation Stop and Restart, TAUJnCMURm.TAUJnTIS[1:0] = 11_B

- The counter can be stopped by setting TAUJnTT.TAUJnTTm to 1, which in turn sets TAUJnTE.TAUJnTEm to 0.
- TAUJnCNTm stops and the current value is retained.
- If the counter is stopped, valid TAUJnTTINm input edges are ignored.
- The counter can be restarted by setting TAUJnTS. TAUJnTSm to 1. TAUJnCNTm restarts to count from 0000 0000_H.

24.13 Synchronous Channel Operation Functions

This section lists all the synchronous channel operation functions provided by the TAUJ. For a general overview of synchronous channel operation, see **Section 24.2, Overview**.

24.13.1 PWM output function

24.13.1.1 Overview

Summary

This function generates multiple PWM outputs by using a master and multiple slave channels. It enables the pulse cycle (frequency) and the duty of the TAUJnTTOUTm to be set. The pulse cycle is set in the master channel. The duty is set in the slave channel.

Prerequisites

- Two channels
- The operating mode for the master channel should be set to interval timer mode, refer to **Table 24.62, Contents of the TAUJnCMORm register for the Master Channel of the PWM Output Function**.
- The operating mode for the slave channels should be set to one count mode, refer to **Table 24.65, Contents of the TAUJnCMORm register for the Slave Channel of the PWM Output Function**.
- TAUJnTTOUTm is not used for this function
- The channel output mode for the slave channels should be set to Synchronous Channel Output Mode1, refer to **Section 24.7, Channel Output Modes**.

Description

The counters are enabled by setting the channel trigger bits (TAUJnTS.TAUJnTSm) to1. This in turn sets TAUJnTE.TAUJnTEm = 1, enabling count operation. The current value of TAUJnCDRm is written to TAUJnCNTm and the counters start to count down from these values. INTTAUJnIm is generated on the master channel and TAUJnTTOUTm (slave) is set or reset to realize the PWM output.

- Master channel:

  When the counter of the master channel reaches $0000\ 0000_H$, pulse cycle time has elapsed and INTTAUJnIm is generated. The TAUJnCDRm value is written to TAUJnCNTm, and the counter counts down.

- Slave channel(s):

  The INTTAUJnIm of the master channel triggers the counter of the slave channel(s). The current value of TAUJnCDRm (slave) is written to TAUJnCNTm (slave) and the counter starts to count down from this value. The TAUJnTTOUTm signal is set to the active level.
  When the counter reaches $0000\ 0000_H$, i.e. duty time has elapsed, INTTAUJnIm is generated and the TAUJnTTOUTm signal is set to the inactive level. The counter returns to $FFFF\ FFFF_H$ and awaits the next INTTAUJnIm of the master channel, and thus the start of the next pulse cycle.

The counter can be stopped by setting TAUJnTT.TAUJnTTm to 1 for the master and slave channel(s), which in turn sets TAUJnTE.TAUJnTEm to 0. TAUJnCNTm and TAUJnTTOUTm of master and slave

channel(s) stop but retain their values. The counters can be restarted by setting TAUJnTS.TAUJnTSm to 1.

Conditions

Simultaneous rewrite can be used with this function. Please refer to **Section 24.6, Simultaneous Rewrite**.

24.13.1.2 Equations

Pulse cycle = (TAUJnCDRm (master) + 1) × count clock cycle

Duty cycle [%] = (TAUJnCDRm (slave)/(TAUJnCDRm (master) +1)) × 100

– Duty cycle = 0%
  TAUJnCDRm (slave) = $0000\ 0000_H$

– Duty cycle = 100%
  TAUJnCDRm (slave) ≥ TAUJnCDRm (master) + 1

24.13.1.3 Block Diagram and General Timing Diagram

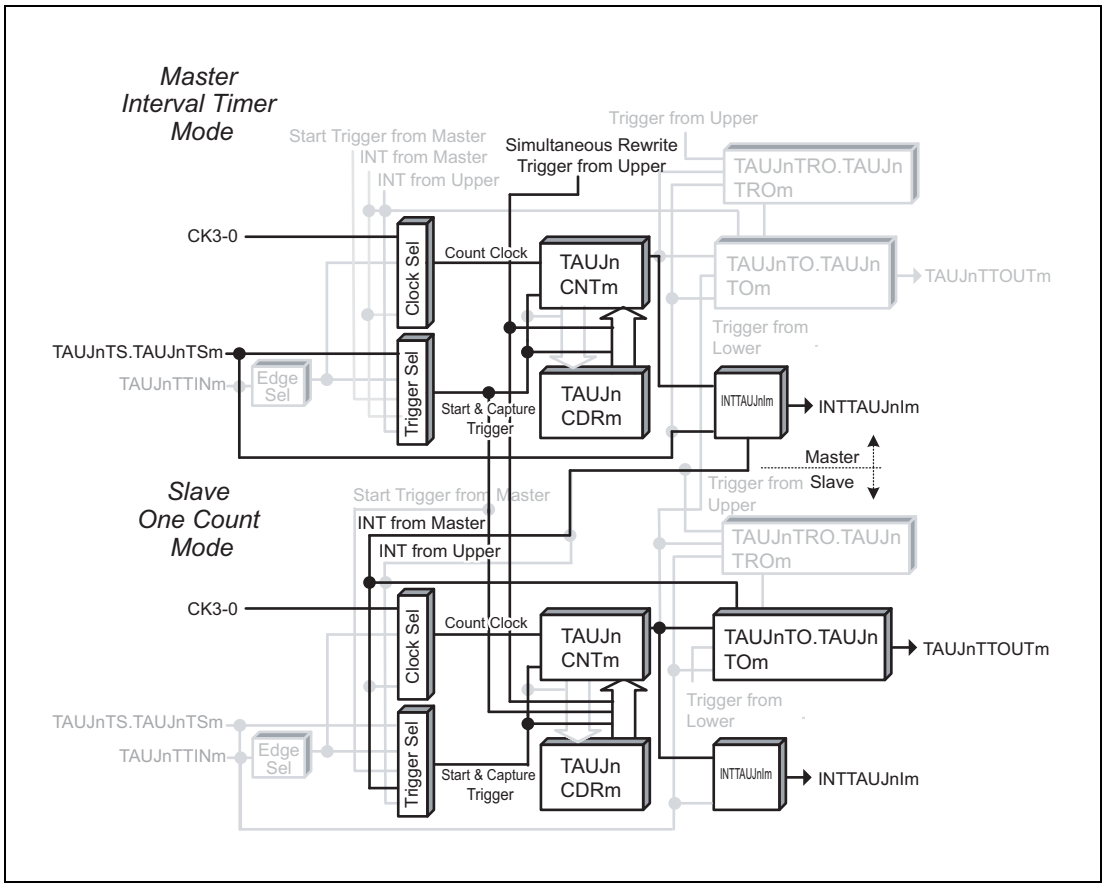

Figure 24.41 Block diagram for PWM Output Function

The following settings apply to the general timing diagram:

- Slave channel: Positive logic (TAUJnTOL.TAUJnTOLm = 0)

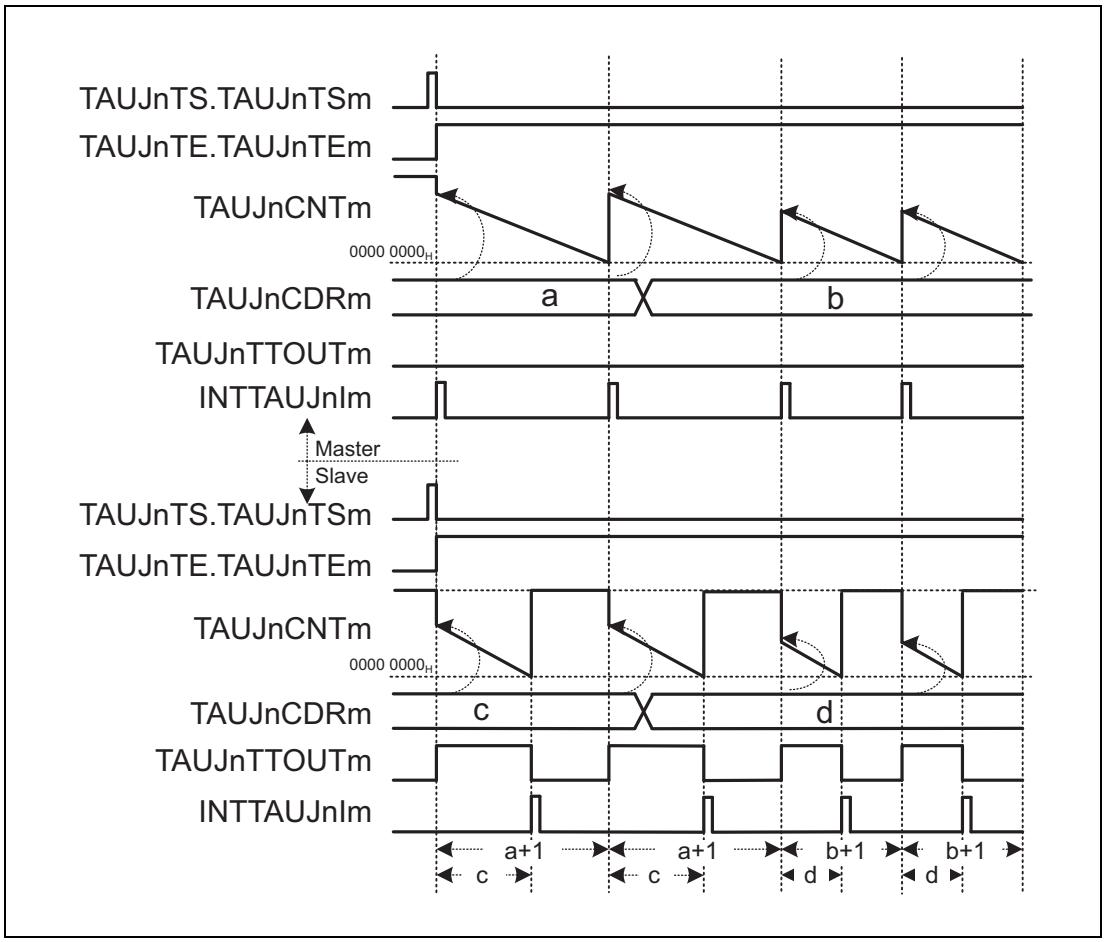

Figure 24.42 General Timing Diagram for PWM Output Function

NOTE

- The interval between the channel starting to count and an interrupt being generated is the value of corresponding TAUJnCDRm +1.
- The TAUJnTTOUTm signal from slave channel rises 1 cycle of the counter clock after the rising edge of INTTAUJnIm from the master channel.

24.13.1.4 Register Settings for the Master Channel

(1) TAUJnCMORm for the master channel

Bit	15	14	13	12	11	10	9	8	7	6	5	4	3	2	1	0
	TAUJnCKS[1:0]		TAUJnCCS[1:0]		TAUJnMAS	TAUJnSTS[2:0]			TAUJnCOS[1:0]		—	TAUJnMD[4:1]				TAUJnMD0
Value after reset	0	0	0	0	0	0	0	0	0	0	0	0	0	0	0	0
R/W	R/W	R/W	R/W	R/W	R/W	R/W	R/W	R/W	R/W	R/W	R	R/W	R/W	R/W	R/W	R/W

Table 24.62 Contents of the TAUJnCMORm register for the Master Channel of the PWM Output Function

Bit Position	Bit Name	Function
15, 14	TAUJnCKS[1:0]	Selects an operating clock. 00: Prescaler output CK0 01: Prescaler output CK1 10: Prescaler output CK2 11: Prescaler output CK3 The value of the TAUJnCKS[1:0] bit of the master and slave channel(s) must be identical.
13, 12	TAUJnCCS[1:0]	Write 00_B.
11	TAUJnMAS	Write 1_B.
10 to 8	TAUJnSTS[2:0]	Write 000_B.
7, 6	TAUJnCOS[1:0]	Write 00_B.
5	Reserved	When writing, write the value after reset.
4 to 1	TAUJnMD[4:1]	Write 0000_B.
0	TAUJnMD0	Write 1_B.

(2) TAUJnCMURm for the master channel

Bit	7	6	5	4	3	2	1	0
	—	—	—	—	—	—	TAUJnTIS[1:0]	
Value after reset	0	0	0	0	0	0	0	0
R/W	R	R	R	R	R	R	R/W	R/W

Table 24.63 Contents of the TAUJnCMURm register for the Master Channel of the PWM Output Function

Bit Position	Bit Name	Function
7 to 2	Reserved	When writing, write the value after reset.
1, 0	TAUJnTIS[1:0]	00: Not used so set to 00

(3) Channel output mode for the master channel

The channel output mode is not used by this function.

(4) Simultaneous rewrite for the master channel

The simultaneous rewrite settings of the master and slave channel must be identical.

Table 24.64 Simultaneous Rewrite Settings for the Master Channel of the PWM Output Function

Bit name	Setting
TAUJnRDE.TAUJnRDEm	1: Enables simultaneous rewrite
TAUJnRDM.TAUJnRDMm	0: The simultaneous rewrite trigger signal is generated when the master channel starts counting

24.13.1.5 Register Settings for the Slave Channel(s)

(1) TAUJnCMORm for the slave channel(s)

Bit	15	14	13	12	11	10	9	8	7	6	5	4	3	2	1	0
	TAUJnCKS[1:0]		TAUJnCCS[1:0]		TAUJnMAS	TAUJnSTS[2:0]			TAUJnCOS[1:0]		—	TAUJnMD[4:1]				TAUJnMD0
Value after reset	0	0	0	0	0	0	0	0	0	0	0	0	0	0	0	0
R/W	R/W	R/W	R/W	R/W	R/W	R/W	R/W	R/W	R/W	R/W	R	R/W	R/W	R/W	R/W	R/W

Table 24.65 Contents of the TAUJnCMORm register for the Slave Channel of the PWM Output Function

Bit Position	Bit Name	Function
15, 14	TAUJnCKS[1:0]	Selects an operating clock. 00: Prescaler output CK0 01: Prescaler output CK1 10: Prescaler output CK2 11: Prescaler output CK3 The value of the TAUJnCKS[1:0] bit of the master and slave channel(s) must be identical.
13, 12	TAUJnCCS[1:0]	Write 00_B.
11	TAUJnMAS	Write 0_B.
10 to 8	TAUJnSTS[2:0]	Write 100_B.
7, 6	TAUJnCOS[1:0]	Write 00_B.
5	Reserved	When writing, write the value after reset.
4 to 1	TAUJnMD[4:1]	Write 0100_B.
0	TAUJnMD0	Write 1_B.

(2) TAUJnCMURm for the slave channel(s)

Bit	7	6	5	4	3	2	1	0
	—	—	—	—	—	—	TAUJnTIS[1:0]	
Value after reset	0	0	0	0	0	0	0	0
R/W	R	R	R	R	R	R	R/W	R/W

Table 24.66 Contents of the TAUJnCMURm register for the Slave Channel of the PWM Output Function

Bit Position	Bit Name	Function
7 to 2	Reserved	When writing, write the value after reset.
1, 0	TAUJnTIS[1:0]	00: Not used so set to 00

(3) Channel output mode for the slave channel(s)

Table 24.67 Control Bit Settings for Synchronous Channel Output Mode 1

Bit Name	Setting
TAUJnTOE.TAUJnTOEm	Write 1_B.
TAUJnTOM.TAUJnTOMm	Write 1_B.
TAUJnTOC.TAUJnTOCm	Write 0_B.
TAUJnTOL.TAUJnTOLm	0: Positive logic 1: Negative logic

(4) Simultaneous rewrite for the slave channel(s)

The simultaneous rewrite settings of the master and slave channel must be identical.

Table 24.68 Simultaneous Rewrite Settings for the Slave Channel of the PWM Output Function

Bit Name	Setting
TAUJnRDE.TAUJnRDEm	1: Enables simultaneous rewrite
TAUJnRDM.TAUJnRDMm	0: The simultaneous rewrite trigger signal is generated when the master channel starts counting

24.13.1.6 Operating Procedure for PWM Output Function

Table 24.69 Operating Procedure for PWM Output Function

	Operation	Status of TAUJn
Initial channel setting	Master channel: set the TAUJnCMORm and TAUJnCMURm registers and the channel output mode as described in **Section 24.13.1.4, Register Settings for the Master Channel**. Slave channel: set the TAUJnCMORm and TAUJnCMURm registers and the channel output mode as described in **Section 24.13.1.5, Register Settings for the Slave Channel(s)**. Set the values of the TAUJnCDRm registers of all channels	Channel operation is stopped.
Start operation	Set TAUJnTS.TAUJnTSm of the master and slave channels to 1 simultaneously. TAUJnTS.TAUJnTSm is a trigger bit, so it is automatically cleared to 0.	TAUJnTE.TAUJnTEm (master and slave channels) is set to 1 and the counters of the master and slave channels start. INTTAUJnIm is generated on the master channel and TAUJnTTOUTm (slave) is set.
During operation	TAUJnCDRm can be changed at any time. TAUJnCNTm and TAUJnRSF.TAUJnRSFm can be read at any time. TAUJnRDT.TAUJnRDTm can be changed during operation.	TAUJnCNTm of the master channel loads TAUJnCDRm and counts down. When the counter reaches 0000 0000_H: • INTTAUJnIm (master) is generated • TAUJnCNTm (master) loads the TAUJnCDRm value and continues count operation • TAUJnCNTm (slave) loads the TAUJnCDRm value and counts down • TAUJnTTOUTm (slave) is set to the active level. When TAUJnCNTm (slave) reaches 0000 0000_H: • INTTAUJnIm (slave) is generated • TAUJnTTOUTm (slave) is set to the inactive level.
Stop operation	Set TAUJnTT.TAUJnTTm of the master and slave channels to 1 simultaneously. TAUJnTT.TAUJnTTm is a trigger bit, so it is automatically cleared to 0.	TAUJnTE.TAUJnTEm is cleared to 0 and the counter stops. TAUJnCNTm and TAUJnTTOUTm stop and retain their current values.

Restart

24.13.1.7 Specific Timing Diagrams

(1) Duty cycle = 0%

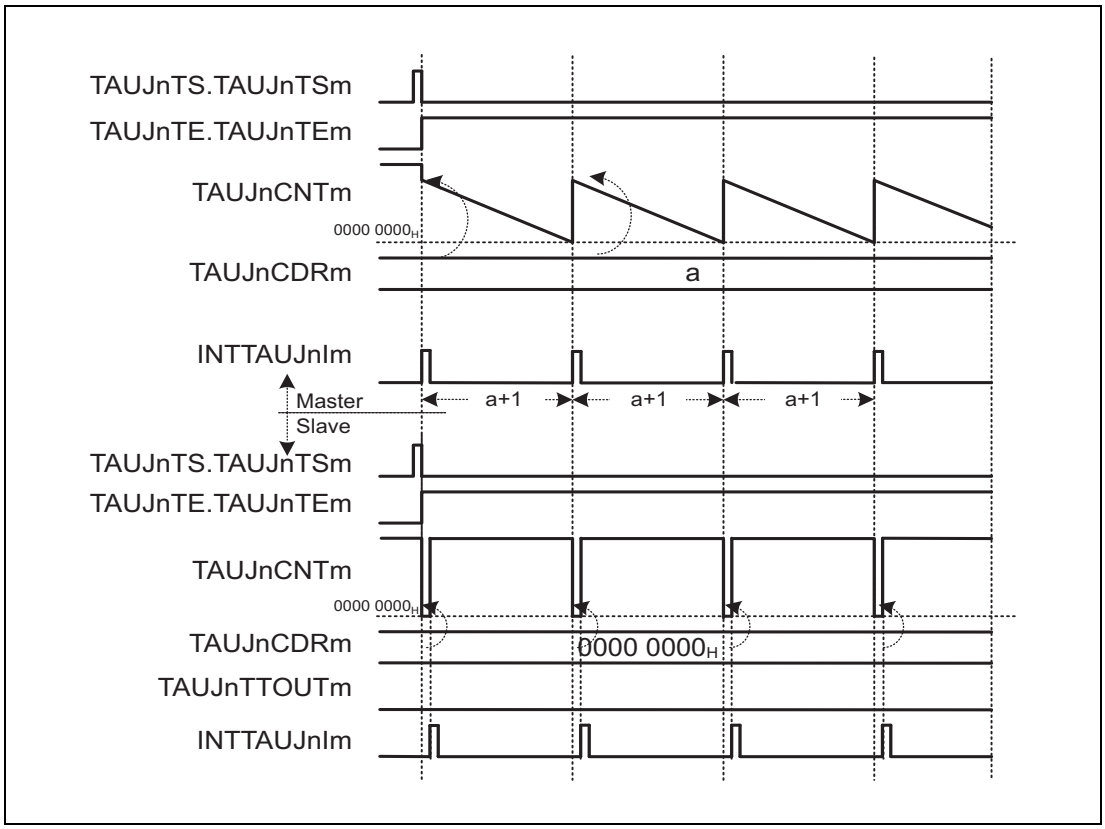

Figure 24.43 TAUJnCDRm (Slave) = 0000 0000$_H$, Positive Logic (TAUJnTOL.TAUJnTOLm (Slave) = 0)

- Every time the master channel generates an interrupt (INTTAUJnIm), 0000 0000$_H$ is written to TAUJnCNTm (slave). Therefore, an interrupt (INTTAUJnIm) is simultaneously generated at the slave channel and TAUJnTTOUTm remains at not active state.
- The value of TAUJnCDRm is loaded into TAUJnCNTm (slave) to generate an interrupt.

(2) Duty cycle = 100%

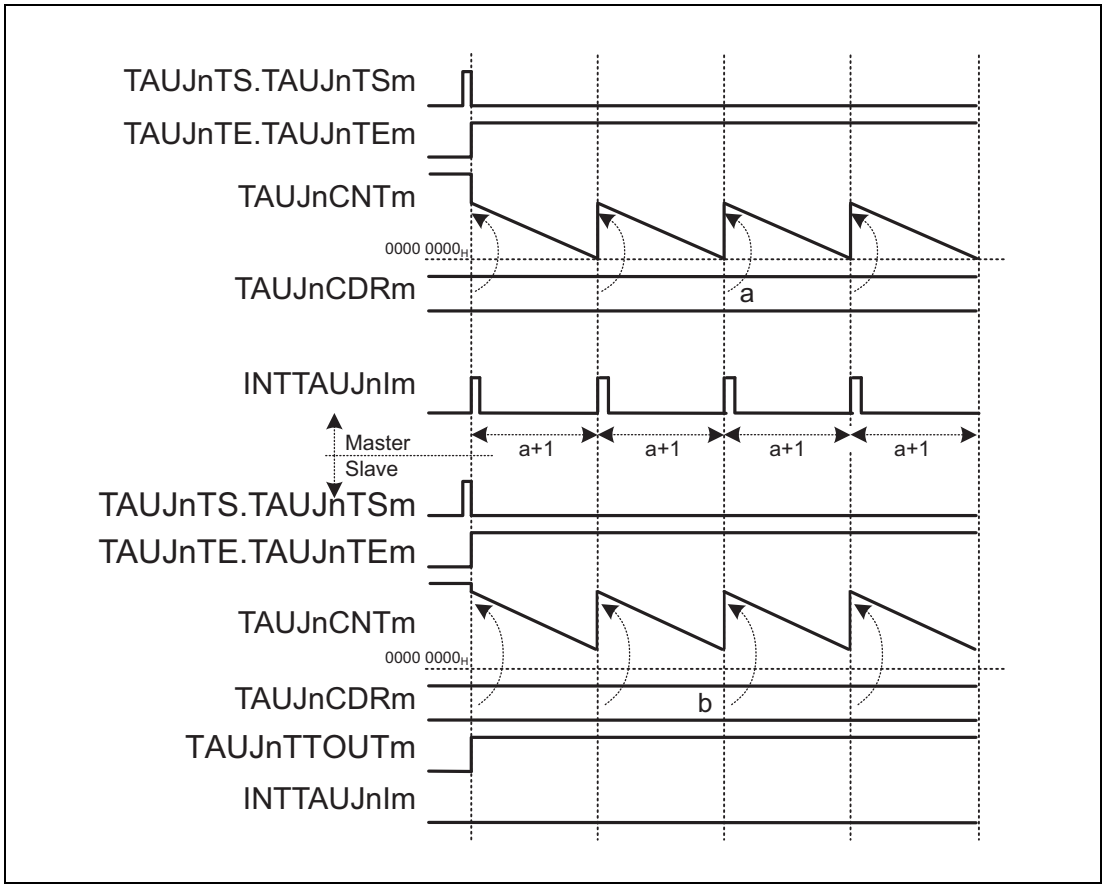

Figure 24.44 TAUJnCDRm (Slave) ≥ TAUJnCDRm (Master) + 1, Positive Logic (TAUJnTOL.TAUJnTOLm (Slave) = 0)

If the TAUJnCDRm (slave) value is greater than the TAUJnCDRm (master) value, no interrupt occurs because the counter of the slave channel does not reach $0000\ 0000_H$. TAUJnTTOUTm remains active.

(3) Operation stop and restart

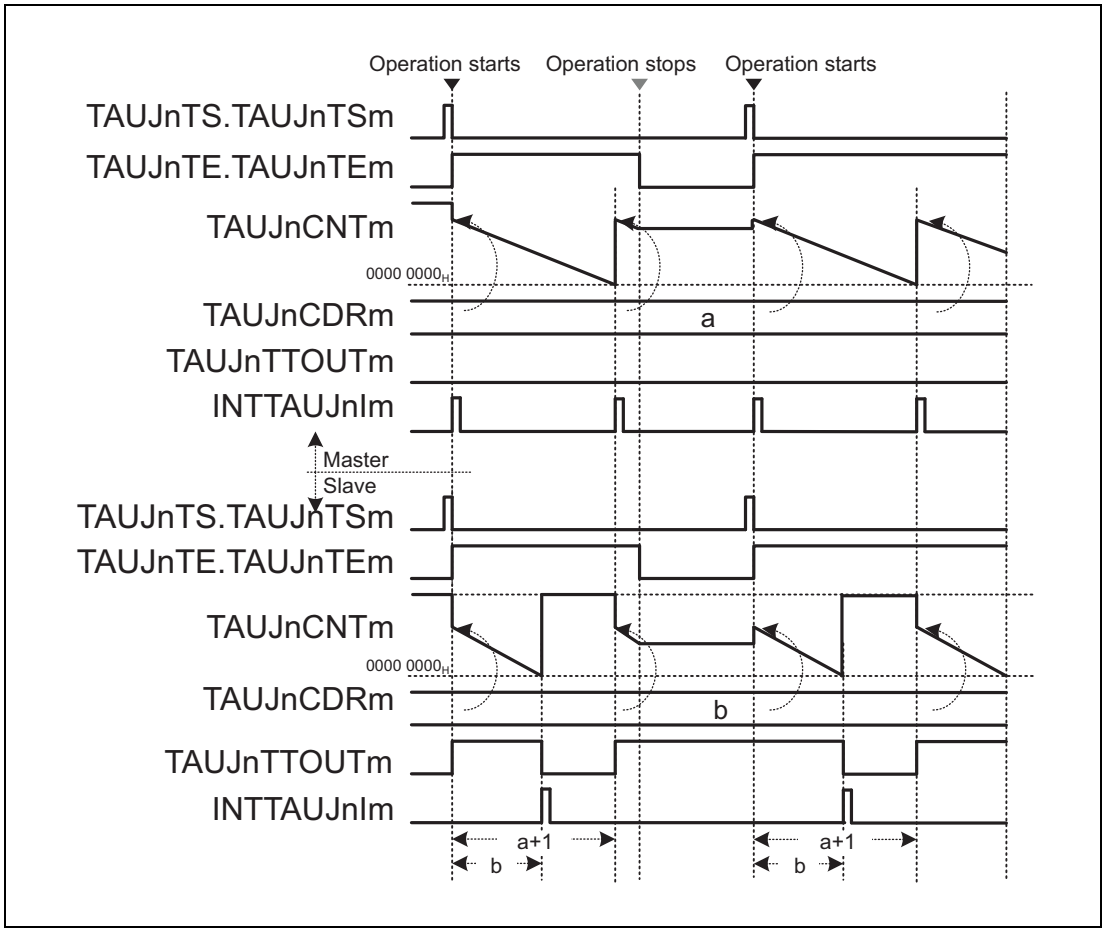

Figure 24.45 Stop and Restart Operation, Positive Logic (TAUJnTOL.TAUJnTOLm (Slave) = 0)

- The counter can be stopped by setting TAUJnTT.TAUJnTTm of master and slave channels to 1. This sets TAUJnTE.TAUJnTEm to 0.
- TAUJnCNTm and TAUJnTTOUTm of every channel stop and retain their current values. No interrupt occurs.
- The counter can be restarted by setting TAUJnTS.TAUJnTSm of master and slave channels to 1. TAUJnCDRm value of master and slave channels is loaded into TAUJnCNTm. The counter starts to count down from this value.

Section 25 Motor Control Timer (TSG3)

This section contains a generic description of the motor control timer (TSG3).

The first part of the section describes all RH850/P1x specific properties, such as the number of units, register base addresses, etc. The remainder of the section describes the functions and registers of the TSG3

25.1 Features of RH850/P1x TSG3

25.1.1 Number of Units

This LSI has the following number of units of TSG3.

Table 25.1 Units

Product	RH850/P1x 100 pins	RH850/P1x 144 pins
Number of Units	2	2
Name	TSG3n (n = 0, 1)	TSG3n (n = 0, 1)

Table 25.2 Index

index	Meaning
n	Throughout this section, the individual TSG3 units are identified by the index “n” (n = 0, 1), for example, TSG3nCTL0 for the TSG3n control register 0.
m, k	Throughout this section, the variables used for description are indicated by the letter “m” or “k”, for example, TSG3nCMPmE is a non-specified compare register.

25.1.2 Register Base Address

TSG3 base addresses are listed in the following table.

TSG3 register addresses are given as offsets from the base addresses in general.

Table 25.3 Register Base Address

Base Address Name	Base Address
<TSG30_base>	$FFE7\ 0000_H$
<TSG31_base>	$FFE7\ 1000_H$

25.1.3 Clock Supply

Clock supply by and to TSG3 is listed in the following table.

Table 25.4 Clock Supply

Unit Name	Unit Clock Name	Supply Clock Name
TSG3n	PCLK	High-speed peripheral clock CLK_HSB

25.1.4 Interrupt Requests

TSG3 interrupt requests are listed in the following table.

Table 25.5 Interrupt Requests

Unit Interrupt Signal	Outline	Interrupt Number	DMA Trigger Number	DTS Trigger Number
TSG30				
INTTSG30I0	TSG30 compare match interrupt 0	40	—	—
INTTSG30I1	TSG30 compare match interrupt 1	41	—	—
INTTSG30I2	TSG30 compare match interrupt 2	42	—	—
INTTSG30I3	TSG30 compare match interrupt 3	43	—	—
INTTSG30I4	TSG30 compare match interrupt 4	44	—	—
INTTSG30I5	TSG30 compare match interrupt 5	45	—	—
INTTSG30I6	TSG30 compare match interrupt 6	46	—	—
INTTSG30I7	TSG30 compare match interrupt 7	47	—	—
INTTSG30I8	TSG30 compare match interrupt 8	48	—	—
INTTSG30I9	TSG30 compare match interrupt 9	49	—	—
INTTSG30I10	TSG30 compare match interrupt 10	50	—	—
INTTSG30I11	TSG30 compare match interrupt 11	51	99	99
INTTSG30I12	TSG30 compare match interrupt 12	52	100	100
INTTSG30IPEK	TSG30 peak interrupt	53	101	101
INTTSG30IVLY	TSG30 valley interrupt	54	102	102
INTTSG30IER	TSG30 error interrupt	55	—	—
INTTSG30IWN	TSG30 warning interrupt	56	—	—
TSG31				
INTTSG31I0	TSG31 compare match interrupt 0	57	—	—
INTTSG31I1	TSG31 compare match interrupt 1	58	—	—
INTTSG31I2	TSG31 compare match interrupt 2	59	—	—
INTTSG31I3	TSG31 compare match interrupt 3	60	—	—
INTTSG31I4	TSG31 compare match interrupt 4	61	—	—
INTTSG31I5	TSG31 compare match interrupt 5	62	—	—
INTTSG31I6	TSG31 compare match interrupt 6	63	—	—
INTTSG31I7	TSG31 compare match interrupt 7	64	—	—
INTTSG31I8	TSG31 compare match interrupt 8	65	—	—
INTTSG31I9	TSG31 compare match interrupt 9	66	—	—
INTTSG31I10	TSG31 compare match interrupt 10	67	—	—
INTTSG31I11	TSG31 compare match interrupt 11	68	103	103
INTTSG31I12	TSG31 compare match interrupt 12	69	104	104
INTTSG31IPEK	TSG31 peak interrupt	70	105	105
INTTSG31IVLY	TSG31 valley interrupt	71	106	106
INTTSG31IER	TSG31 error interrupt	72	—	—
INTTSG31IWN	TSG31 warning interrupt	73	—	—

25.1.5 Reset Sources

TSG3 reset sources are listed in the following table.

Table 25.6 Reset Source

Unit Name	Reset Source
TSG3n	Reset controller SYSRES

25.1.6 External Input/Output Signals

External input/output signals of TSG3 are listed in the following table.

Table 25.7 External Input/Output Signals

Unit Signal Name	outline	Alternative Port Pin Signal Name
TSG30		
TSG30CLKI	Clock enable input	TSG30CLKI
TSG30PTSI0-TSG30PTSI2	External pattern input	ENCA0E0, ENCA0E1, ENCA0EC[*1]
TSG30O0-TSG30O7	Timer output	TSG30O0-TSG30O7
TSG31		
TSG31CLKI	Clock enable input	TSG31CLKI
TSG31PTSI0-TSG31PTSI2	External pattern input	ENCA1E0, ENCA1E1, ENCA1EC[*1]
TSG31O0-TSG31O7	Timer output	TSG31O0-TSG31O7

Note 1. For the P1x products, external pattern input is shared with ENCAn input. For the detail specification, see **Section 29.2.2.9, PIC1ATSGHALLSEL — Hall Sensor Input Select Register**.

Note 2. Setting of the noise filter for the port is required when the external pattern input pin is used. For details, see **Section 2.6, Noise Filter and Edge Level Detection Circuit**.

25.2 Overview

25.2.1 Functional Overview

The TSG3n is an 18-bit timer counter with various motor control functions.

- Count clock resolution: Minimum 12.5 ns (count clock = 80 MHz)
- Operating mode corresponding to various motor control methods
- Compare registers with reload buffer
- 10-bit dead time counter
  - Dead time counter with reload buffer
  - Independent dead time can be set for positive to inverse phase change and inverse to positive phase change.
- A/D conversion trigger signal generation
  - Three A/D conversion trigger signals can be generated by the compare registers TSG3nDCMP0E, TSG3nDCMP1E, and TSG3nDCMP2E.
  - Skipping function of A/D conversion trigger signals TSG3nADTRG0 and TSG3nADTRG1 can be set independently. The skipping ratio can be selected among 1/1, 1/2, 1/4, and 1/8.
  - The dedicated pin (TSG3nO7) can be used to output the toggle or diagnostic signal set by the TSG3nADTRG0 signal and reset by the TSG3nADTRG1 signal.
- Interrupt skipping
  - Skipping rate: 1/1 to 1/32
- Forced output stop function
  - Using the timer option (TAPA) function allows the high impedance control of the TSG3nO1 to TSG3nO6 pin outputs.
- Compare value setting
  - Reload (simultaneous rewrite) or anytime rewrite can be selected.
- Reload mode
  - Writing to TSG3nCMP1E (setting the reload request flag (TSG3nRSF)) enables reload, and allows simultaneous transfer of the values of multiple registers.
  - Data can be transferred at peak/valley/peak or valley reload timing
  - Reload request flag (TSG3nRSF)
  - Register address assignment allowing DMA transfer
  - Reload skipping
- HT-PWM mode
  - 0 to 100% PWM duty cycle output is possible (with possible dead time reduction).
  - The LSB in the compare register can be used to append an additional pulse to the PWM output during count up, thus improving the output resolution without extra load on software.

- 120-DC control
  - Semi-automatic cruise function (trigger signal can be generated by an offset in conjunction with two-phase encoder, three-phase encoder, or ENCA).
- Three-phase encoder function (hall sensor signals can be input).
- Active level of the output pins TSG3nO1 to TSG3nO6 can be set individually.
- Fail-safe function (warning interrupt or error interrupt can be generated)
  - Simultaneous active output detect function for positive and inverse phases.
  - Abnormal input detection function of the three-phase encoder

NOTE

In this section, active level is indicated as high level.

25.2.2 Block Diagram

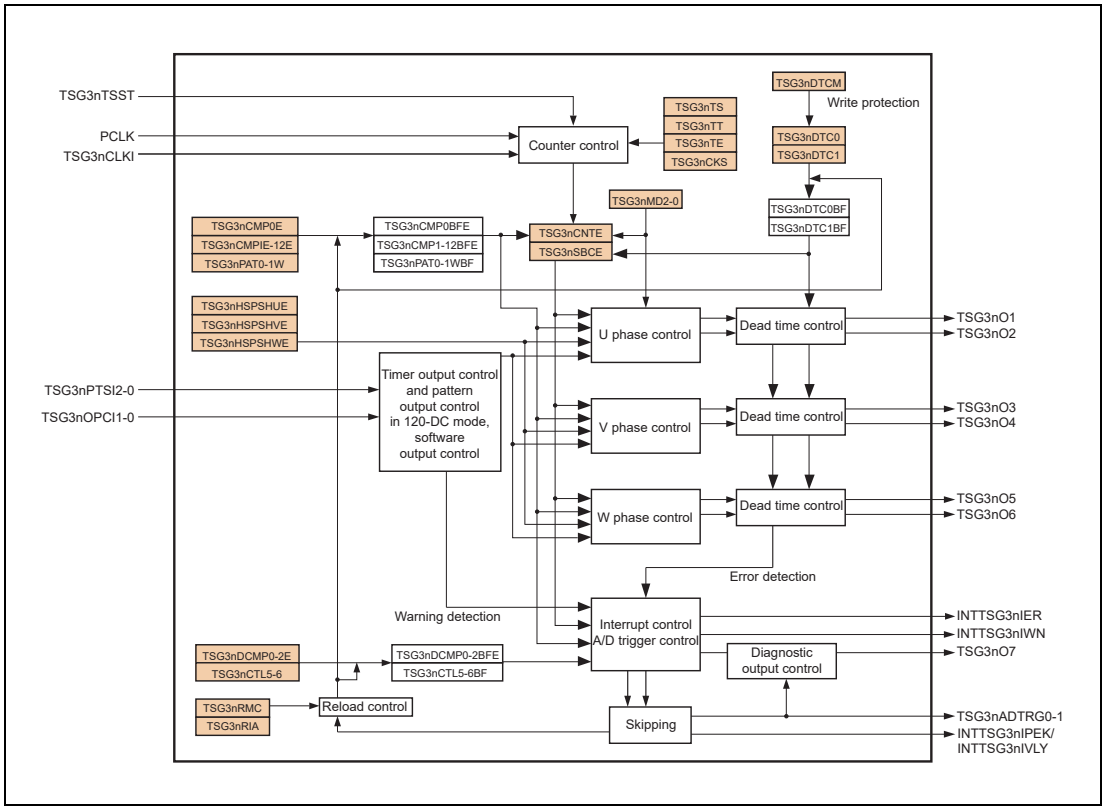

Figure 25.1 TSG3n Block Diagram

- TSG3nTSST: Simultaneous start trigger (input from PIC1A)

25.3 List of Registers

25.3.1 List of Registers

TSG3n registers are listed in the following table.

For <TSG3n_base>, see **Section 25.1.2, Register Base Address**

Table 25.8 List of Registers (1/3)

Module Name	Register Name	Symbol	Address	Reload
TSG3n	TSG3n control register0	TSG3nCTL0	<TSG3n_base> + 208_H	Disabled
TSG3n	TSG3n control register1	TSG3nCTL1	<TSG3n_base> + $20C_H$	Disabled
TSG3n	TSG3n control register2	TSG3nCTL2	<TSG3n_base> + $78C_H$	Enabled
TSG3n	TSG3n control register 3	TSG3nCTL3	<TSG3n_base> + 004_H	Disabled
TSG3n	TSG3n control register 4	TSG3nCTL4	<TSG3n_base> + $07C_H$	Enabled
TSG3n	TSG3n control register 5	TSG3nCTL5	<TSG3n_base> + 008_H	Disabled
TSG3n	TSG3n control register 6	TSG3nCTL6	<TSG3n_base> + $00C_H$	Disabled
TSG3n	TSG3n control register 7	TSG3nCTL7	<TSG3n_base> + 218_H	Disabled
TSG3n	TSG3n control register 8	TSG3nCTL8	<TSG3n_base> + $21C_H$	Disabled
TSG3n	TSG3n I/O control register 0	TSG3nIOC0	<TSG3n_base> + 200_H	Disabled
TSG3n	TSG3n I/O control register 1	TSG3nIOC1	<TSG3n_base> + 204_H	Disabled
TSG3n	TSG3n I/O control register 2	TSG3nIOC2	<TSG3n_base> + 000_H	Disabled
TSG3n	TSG3n I/O control register 3	TSG3nIOC3	<TSG3n_base> + 074_H	Enabled
TSG3n	TSG3n status register 0	TSG3nSTR0	<TSG3n_base> + 010_H	Disabled
TSG3n	TSG3n status register 1	TSG3nSTR1	<TSG3n_base> + 014_H	Disabled
TSG3n	TSG3n status register 2	TSG3nSTR2	<TSG3n_base> + 018_H	Disabled
TSG3n	TSG3n status clear trigger register	TSG3nSTC	<TSG3n_base> + $01C_H$	Disabled
TSG3n	TSG3n option register 0	TSG3nOPT0	<TSG3n_base> + 020_H	Disabled
TSG3n	TSG3n option register 1	TSG3nOPT1	<TSG3n_base> + 024_H	Disabled
TSG3n	TSG3n trigger register 0	TSG3nTRG0	<TSG3n_base> + 030_H	Disabled
TSG3n	TSG3n trigger register 1	TSG3nTRG1	<TSG3n_base> + 034_H	Disabled
TSG3n	TSG3n trigger register 2	TSG3nTRG2	<TSG3n_base> + 038_H	Disabled
TSG3n	TSG3n counter read buffer register	TSG3nCNT	<TSG3n_base> + 028_H	Disabled
TSG3n	TSG3n bit extended counter read buffer register	TSG3nCNTE	<TSG3n_base> + $1A0_H$	Disabled
TSG3n	TSG3n sub-counter read buffer register	TSG3nSBC	<TSG3n_base> + $02C_H$	Disabled
TSG3n	TSG3n bit extended sub-counter read buffer register	TSG3nSBCE	<TSG3n_base> + $1A4_H$	Disabled
TSG3n	TSG3n compare register 0	TSG3nCMP0	<TSG3n_base> + 058_H	Enabled
TSG3n	TSG3n bit extended compare register 0	TSG3nCMP0E	<TSG3n_base> + $14C_H$	Enabled
TSG3n	TSG3n compare register 1, 2	TSG3nCMP1W	<TSG3n_base> + 040_H	Enabled
TSG3n	TSG3n compare register 5, 6	TSG3nCMP5W	<TSG3n_base> + 044_H	Enabled
TSG3n	TSG3n compare register 9, 10	TSG3nCMP9W	<TSG3n_base> + 048_H	Enabled
TSG3n	TSG3n compare register 3, 4	TSG3nCMP3W	<TSG3n_base> + $04C_H$	Enabled
TSG3n	TSG3n compare register 7, 8	TSG3nCMP7W	<TSG3n_base> + 050_H	Enabled
TSG3n	TSG3n compare register 11, 12	TSG3nCMP11W	<TSG3n_base> + 054_H	Enabled
TSG3n	TSG3n compare register 1	TSG3nCMP1	<TSG3n_base> + 080_H	Enabled
TSG3n	TSG3n compare register 2	TSG3nCMP2	<TSG3n_base> + 084_H	Enabled
TSG3n	TSG3n compare register 3	TSG3nCMP3	<TSG3n_base> + 098_H	Enabled
TSG3n	TSG3n compare register 4	TSG3nCMP4	<TSG3n_base> + $09C_H$	Enabled

Table 25.8 List of Registers (2/3)

Module Name	Register Name	Symbol	Address	Reload
TSG3n	TSG3n compare register 5	TSG3nCMP5	<TSG3n_base> + 088_H	Enabled
TSG3n	TSG3n compare register 6	TSG3nCMP6	<TSG3n_base> + $08C_H$	Enabled
TSG3n	TSG3n compare register 7	TSG3nCMP7	<TSG3n_base> + $0A0_H$	Enabled
TSG3n	TSG3n compare register 8	TSG3nCMP8	<TSG3n_base> + $0A4_H$	Enabled
TSG3n	TSG3n compare register 9	TSG3nCMP9	<TSG3n_base> + 090_H	Enabled
TSG3n	TSG3n compare register 10	TSG3nCMP10	<TSG3n_base> + 094_H	Enabled
TSG3n	TSG3n compare register 11	TSG3nCMP11	<TSG3n_base> + $0A8_H$	Enabled
TSG3n	TSG3n compare register 12	TSG3nCMP12	<TSG3n_base> + $0AC_H$	Enabled
TSG3n	TSG3n bit extended compare register 1	TSG3nCMP1E	<TSG3n_base> + $17C_H$	Enabled
TSG3n	TSG3n bit extended compare register 2	TSG3nCMP2E	<TSG3n_base> + 178_H	Enabled
TSG3n	TSG3n bit extended compare register 3	TSG3nCMP3E	<TSG3n_base> + 164_H	Enabled
TSG3n	TSG3n bit extended compare register 4	TSG3nCMP4E	<TSG3n_base> + 160_H	Enabled
TSG3n	TSG3n bit extended compare register 5	TSG3nCMP5E	<TSG3n_base> + 174_H	Enabled
TSG3n	TSG3n bit extended compare register 6	TSG3nCMP6E	<TSG3n_base> +170_H	Enabled
TSG3n	TSG3n bit extended compare register 7	TSG3nCMP7E	<TSG3n_base> + $15C_H$	Enabled
TSG3n	TSG3n bit extended compare register 8	TSG3nCMP8E	<TSG3n_base> + 158_H	Enabled
TSG3n	TSG3n bit extended compare register 9	TSG3nCMP9E	<TSG3n_base> + $16C_H$	Enabled
TSG3n	TSG3n bit extended compare register 10	TSG3nCMP10E	<TSG3n_base> + 168_H	Enabled
TSG3n	TSG3n bit extended compare register 11	TSG3nCMP11E	<TSG3n_base> + 154_H	Enabled
TSG3n	TSG3n bit extended compare register 12	TSG3nCMP12E	<TSG3n_base> + 150_H	Enabled
TSG3n	TSG3n diagnostic output compare register 0, 1	TSG3nDCMP0W	<TSG3n_base> + $05C_H$	Enabled
TSG3n	TSG3n diagnostic output compare register 2	TSG3nDCMP2	<TSG3n_base> + 060_H	Enabled
TSG3n	TSG3n bit extended diagnostic output compare register 0	TSG3nDCMP0E	<TSG3n_base> + 148_H	Enabled
TSG3n	TSG3n bit extended diagnostic output compare register 1	TSG3nDCMP1E	<TSG3n_base> + 144_H	Enabled
TSG3n	TSG3n bit extended diagnostic output compare register 2	TSG3nDCMP2E	<TSG3n_base> + 140_H	Enabled
TSG3n	TSG3n pattern register 0	TSG3nPAT0W	<TSG3n_base> + 064_H	Enabled
TSG3n	TSG3n pattern register 1	TSG3nPAT1W	<TSG3n_base> + 068_H	Enabled
TSG3n	TSG3n dead time control register 0	TSG3nDTC0W	<TSG3n_base> + $06C_H$	Enabled
TSG3n	TSG3n dead time control register 1	TSG3nDTC1W	<TSG3n_base> + 070_H	Enabled
TSG3n	TSG3n HT-PWM U phase compare register	TSG3nCMPU	<TSG3n_base> + $0B0_H$	Enabled
TSG3n	TSG3n HT-PWM V phase compare register	TSG3nCMPV	<TSG3n_base> + $0B4_H$	Enabled
TSG3n	TSG3n HT-PWM W phase compare register	TSG3nCMPW	<TSG3n_base> + $0B8_H$	Enabled
TSG3n	TSG3n bit extended HT-PWM U phase compare register	TSG3nCMPUE	<TSG3n_base> + 188_H	Enabled
TSG3n	TSG3n bit extended HT-PWM V phase compare register	TSG3nCMPVE	<TSG3n_base> + 184_H	Enabled
TSG3n	TSG3n bit extended HT-PWM W phase compare register	TSG3nCMPWE	<TSG3n_base> + 180_H	Enabled
TSG3n	TSG3n SP-PWM U phase active width register	TSG3nUPW	<TSG3n_base> + $0BC_H$	Enabled
TSG3n	TSG3n SP-PWM V phase active width register	TSG3nVPW	<TSG3n_base> + $0C0_H$	Enabled
TSG3n	TSG3n SP-PWM W phase active width register	TSG3nWPW	<TSG3n_base> + $0C4_H$	Enabled
TSG3n	TSG3n bit extended SP-PWM U phase active width register	TSG3nUPWE	<TSG3n_base> + 198_H	Enabled
TSG3n	TSG3n bit extended SP-PWM V phase active width register	TSG3nVPWE	<TSG3n_base> + 194_H	Enabled
TSG3n	TSG3n bit extended SP-PWM W phase active width register	TSG3nWPWE	<TSG3n_base> + 190_H	Enabled
TSG3n	TSG3n HSP-PWM W phase shift register	TSG3nHSPSHWE	<TSG3n_base> + 120_H	Enabled

Table 25.8 List of Registers (3/3)

Module Name	Register Name	Symbol	Address	Reload
TSG3n	TSG3n HSP-PWM V phase shift register	TSG3nHSPSHVE	<TSG3n_base> + 124_H	Enabled
TSG3n	TSG3n HSP-PWM U phase shift register	TSG3nHSPSHUE	<TSG3n_base> + 128_H	Enabled
TSG3n	TSG3n HSP-PWM W phase compare register	TSG3nHSPCMWE	<TSG3n_base> + $12C_H$	Enabled
TSG3n	TSG3n HSP-PWM V phase compare register	TSG3nHSPCMVE	<TSG3n_base> + 130_H	Enabled
TSG3n	TSG3n HSP-PWM U phase compare register	TSG3nHSPCMUE	<TSG3n_base> + 134_H	Enabled
TSG3n	TSG3n dead timer protection register	TSG3nDTPR	<TSG3n_base> + 210_H	Disabled

25.3.2 TSG3nCTL0 — TSG3n Control Register 0

This register specifies the pulse width for the diagnostic output and operating mode of the TSG3n.

Access: This register can be read/written in 8-bit units.

Address: <TSG3n_base> + 208_H

Value after reset: 00_H

Bit	7	6	5	4	3	2	1	0
	—	—	—	TSG3nDWD	—	TSG3nMD[2:0]		
Value after reset	0	0	0	0	0	0	0	0
R/W	R	R	R	R/W	R	R/W	R/W	R/W

Table 25.9 TSG3nCTL0 Register Contents

Bit Position	Bit Name	Function
7 to 5	Reserved	When read, the value after reset is read. When writing, write the value after reset.
4	TSG3nDWD	Selects the pulse width for the diagnostic output. 0: The output pulse width is set to 8 clocks. 1: The output pulse width is set to 16 clocks. The setting of this bit is valid when diagnostic output is enabled (TSG3nIOC1.TSG3nTGS = 1).
3	Reserved	When read, the value after reset is read. When writing, write the value after reset.
2 to 0	TSG3nMD[2:0]	Selects timer mode

TSG3n MD2	TSG3n MD1	TSG3n MD0	Timer Mode
0	0	0	PWM mode
0	0	1	HT-PWM mode (HT-PWM)
0	1	0	Shift pulse PWM mode (SP-PWM)
0	1	1	120-DC mode
1	0	0	High-accuracy shift pulse PWM mode (HSP-PWM)
Other than above			Setting prohibited

CAUTION

This register should be set when the timer is stopped (TSG3nSTR0.TSG3nTE = 0). Only the same value can be written during timer operation (TSG3nSTR0.TSG3nTE = 1). If the different value is written to this register when TSG3nSTR0.TSG3nTE = 1, timer operation cannot be guaranteed. If this register is erroneously rewritten, set this register again after stopping the timer

25.3.3 TSG3nCTL1 — TSG3n Control Register 1

This register controls the flags of TSG3n.

Access: This register can be read/written in 16-bit units.

Address: <TSG3n_base> + $20C_H$

Value after reset: 0000_H

Bit	15	14	13	12	11	10	9	8	7	6	5	4	3	2	1	0
	—	—	—	—	—	—	TSG3n TBA2	TSG3n TBA1	TSG3n TBA0	TSG3n PPC	TSG3n PEC	TSG3n TDC	TSG3n NDC	TSG3n PRC	TSG3nPTC [1:0]	
Value after reset	0	0	0	0	0	0	0	0	0	0	0	0	0	0	0	0
R/W	R	R	R	R	R	R	R/W	R/W	R/W	R/W	R/W	R/W	R/W	R/W	R/W	R/W

Table 25.10 TSG3nCTL1 Register Contents (1/2)

Bit Position	Bit Name	Function
15 to 10	Reserved	When read, the value after reset is read. When writing, write the value after reset.
9	TSG3nTBA2	Enables or disables detection of the simultaneous active states of the TSG3nO5 and TSG3nO6 pins. 0: Disables detection of simultaneous active states of the TSG3nO5 and TSG3nO6 pins. 1: Enables detection of simultaneous active states of the TSG3nO5 and TSG3nO6 pins. If the simultaneous active state is detected when the TSG3nIOC1.TSG3nEOC and TSG3nTBA2 bits are 1, the positive phase and inverse phase simultaneous active state detection flag 2 (TSG3nTBF2) is set to 1, and an error interrupt (INTTSG3nIER) is generated.
8	TSG3nTBA1	Enables or disables detection of the simultaneous active states of the TSG3nO3 and TSG3nO4 pins. 0: Disables detection of simultaneous active states of the TSG3nO3 and TSG3nO4 pins. 1: Enables detection of simultaneous active states of the TSG3nO3 and TSG3nO4 pins. If the simultaneous active state is detected when the TSG3nIOC1.TSG3nEOC and TSG3nTBA1bits are 1, the positive phase and inverse phase simultaneous active state detection flag 1 (TSG3nTBF1) is set to 1, and an error interrupt (INTTSG3nIER) is generated.
7	TSG3nTBA0	Enables or disables detection of the simultaneous active states of the TSG3nO1 and TSG3nO2 pins. 0: Disables detection of simultaneous active states of the TSG3nO1 and TSG3nO2 pins. 1: Enables detection of simultaneous active states of the TSG3nO1 and TSG3nO2 pins. If the simultaneous active state is detected when the TSG3nIOC1.TSG3nEOC and TSG3nTBA0 bits are 1, the positive phase and inverse phase simultaneous active state detection flag 0 (TSG3nTBF0) is set to 1, and an error interrupt (INTTSG3nIER) is generated.
6	TSG3nPPC	Enables or disables detection of the pattern phase difference (TSG3nSTR2.TSG3nPPF) between the TSG3nPTSI2-0 and TSG3nOPF2-0. 0: Disables detection of I/O pattern difference. 1: Enables detection of I/O pattern difference
5	TSG3nPEC	Enables or disables detection of the pattern error (TSG3nSTR2.TSG3nPEF) of the TSG3nPTSI2-0 pins. 0: Disables detection of the pattern error of the TSG3nPTSI2-0 pins. 1: Enables detection of the pattern error of the TSG3nPTSI2-0 pins.

Table 25.10 TSG3nCTL1 Register Contents (2/2)

Bit Position	Bit Name	Function
4	TSG3nTDC	Enables or disables detection of the simultaneous trigger (TSG3nSTR2.TSG3nTDF) of the TSG3nOPCI0 and TSG3nOPCI1. 0: Disables detection of the simultaneous trigger of the TSG3nOPCI0 and TSG3nOPCI1. 1: Enables detection of the simultaneous trigger of the TSG3nOPCI0 and TSG3nOPCI1.
3	TSG3nNDC	Enables or disables detection of the noise generation (two or more pins change simultaneously) (TSG3nSTR2.TSG3nNDF) on the TSG3nPTSI2-0 pins. 0: Disables detection of the noise generation on the TSG3nPTSI2-0 pins. 1: Enables detection of the noise generation on the TSG3nPTSI2-0 pins.
2	TSG3nPRC	Enables or disables detection of the reversal of the pattern (TSG3nSTR2.TSG3nPRF) of the TSG3nPTSI2-0 pins. 0: Disables detection of the reversal of the pattern of the TSG3nPTSI2-0 pins. 1: Enables detection of the reversal of the pattern of the TSG3nPTSI2-0 pins.
1, 0	TSG3nPTC[1:0]	Enables or disables detection of an abnormal toggle (TSG3nSTR2.TSG3nPTF) of the TSG3nPTSI2-0 pins between TSG3nOPCI1 and TSG3nOPCI0 triggers

TSG3n PTC1	TSG3n PTC0	Function
0	0	Disables detection of an abnormal toggle of the TSG3nPTSI2-0 pins.
0	1	
1	0	Enables detection of an abnormal toggle of the TSG3nPTSI2-0 pins.
1	1	Enables detection of an abnormal toggle of the TSG3nPTSI2-0 pins. When an abnormal toggle is detected, the pattern output switch trigger is automatically switched from trigger switch to pattern switch (TSG3nPOT is switched from 1 to 0.)

CAUTIONS

1. If TSG3nDTC0 or TSG3nDTC1 is set to 0000_H (without dead time), the TSG3nTBA2-0 bits should be set to 0.
2. This register should be set when the timer is stopped (TSG3nSTR0.TSG3nTE = 0). Only the same value can be written during timer operation (TSG3nSTR0.TSG3nTE = 1). If the different value is written to this register when TSG3nSTR0.TSG3nTE = 1, timer operation cannot be guaranteed. If this register is erroneously rewritten, set this register again after stopping the timer

25.3.4 TSG3nCTL2 — TSG3n Control Register 2

This register selects a count clock for TSG3n.

Access: This register can be read/written in 32-bit units.

Address: <TSG3n_base> + 078_H

Value after reset: $0000\ 0000_H$

Bit	31	30	29	28	27	26	25	24	23	22	21	20	19	18	17	16
	—	—	—	—	—	—	—	—	—	—	—	—	—	—	—	—
Value after reset	0	0	0	0	0	0	0	0	0	0	0	0	0	0	0	0
R/W	R	R	R	R	R	R	R	R	R	R	R	R	R	R	R	R

Bit	15	14	13	12	11	10	9	8	7	6	5	4	3	2	1	0
	—	—	—	—	—	—	—	—	—	—	—	—	—	—	—	TSG3n CKS
Value after reset	0	0	0	0	0	0	0	0	0	0	0	0	0	0	0	0
R/W	R	R	R	R	R	R	R	R	R	R	R	R	R	R	R	R/W

Table 25.11 TSG3nCTL2 Register Contents

Bit Position	Bit Name	Function
31 to 1	Reserved	When read, the value after reset is read. When writing, write the value after reset.
0	TSG3nCKS	Selects a count clock 0: Selects PCLK as a count clock. 1: Counted by PCLK when clock enable input (TSG3nCLKI) is high level.

CAUTION

Set the TSG3nCTL2.TSG3nCKS bit to 0 in HT-PWM mode and HSP-PWM mode.

25.3.5 TSG3nCTL3 — TSG3n Control Register 3

This register selects the rewrite method of the compare registers.

Access: This register can be read/written in 8-bit units.

Address: <TSG3n_base> + 004_H

Value after reset: 00_H

Bit	7	6	5	4	3	2	1	0
	—	—	—	—	—	—	TSG3nRIA	TSG3nRMC
Value after reset	0	0	0	0	0	0	0	0
R/W	R	R	R	R	R	R	R/W	R/W

Table 25.12 TSG3nCTL3 Register Contents

Bit Position	Bit Name	Function
7 to 2	Reserved	When read, the value after reset is read. When writing, write the value after reset.
1	TSG3nRIA	Selects the reload timing of the compare register values. 0: The reload timing is set to peak reload timing (set by TSG3nCTL4.TSG3nPRE) and valley reload timing (set by TSG3nCTL4.TSG3nVRE). 1: The reload timing is set to peak interrupt timing and valley interrupt timing. The setting of this bit is valid in reload mode (TSG3nRMC = 0).
0	TSG3nRMC	Selects the transfer timing of the compare register values. 0: Reload mode (simultaneous rewrite) Writing to registers to be reloaded enables reloading and the register values are rewritten simultaneously at the next reload timing. Writing to any register other than registers to be reloaded does not enable reloading. For the register to be reloaded, see **Section 25.3.1, List of Registers**. 1: Anytime rewrite mode The compare registers are rewritten independently. Whenever a value is written to the compare register, the written value is reflected immediately. TSG3nRSF is cleared. Do not set TSG3nRMC to 1 when operated in 120-DC mode or in HSP-PWM mode.

25.3.6 TSG3nCTL4 — TSG3n Control Register 4

This register enables or disables generation of a peak interrupt and a valley interrupt, and the reload timing.

Access: This register can be read/written in 32-bit units.

Address: <TSG3n_base> + $07C_H$

Value after reset: $0000\ 0000_H$

Bit	31	30	29	28	27	26	25	24	23	22	21	20	19	18	17	16
	—	—	—	—	—	—	—	—	—	—	—	—	—	—	—	—
Value after reset	0	0	0	0	0	0	0	0	0	0	0	0	0	0	0	0
R/W	R	R	R	R	R	R	R	R	R	R	R	R	R	R	R	R

Bit	15	14	13	12	11	10	9	8	7	6	5	4	3	2	1	0
	—	—	—	—	—	—	—	TSG3n PRE	TSG3n VRE	TSG3n PIE	TSG3n VIE	TSG3nRCC[04:00]				
Value after reset	0	0	0	0	0	0	0	0	0	0	0	0	0	0	0	0
R/W	R	R	R	R	R	R	R	R/W	R/W	R/W	R/W	R/W	R/W	R/W	R/W	R/W

Table 25.13 TSG3nCTL4 Register Contents (1/2)

Bit Position	Bit Name	Function
31 to 9	Reserved	When read, the value after reset is read. When writing, write the value after reset.
8	TSG3nPRE	Enables or disables the peak reload timing. 0: Disables reload operation at the peak timing of the 18-bit counter. 1: Enables reload operation at the peak timing of the 18-bit counter. • The peak reload timing means the peak timing of the 18-bit counter in HT-PWM mode and the clear timing of the 18-bit counter by compare match in any mode other than HT-PWM mode. • When the reload operation at the peak timing of the 18-bit counter is disabled (TSG3nPRE = 0), reload is not executed in any mode other than HT-PWM mode.
7	TSG3nVRE	Enables or disables the valley reload timing. 0: Disables reload operation at the valley timing of the 18-bit counter. 1: Enables reload operation at the valley timing of the 18-bit counter. The setting of this bit is valid only in HT-PWM mode.
6	TSG3nPIE	Enables or disables generation of a peak interrupt (INTTSG3nIPEK). 0: Disables generation of a peak interrupt (INTTSG3nIPEK) at the peak timing of the 18-bit counter. Interrupts are not skipped. 1: Enables generation of a peak interrupt (INTTSG3nIPEK) at the peak timing of the 18-bit counter. Interrupts are skipped.
5	TSG3nVIE	Enables or disables generation of a valley interrupt (INTTSG3nIVLY). 0: Disables generation of a valley interrupt (INTTSG3nIVLY) at the valley timing of the 18-bit counter. Interrupts are not skipped. 1: Enables generation of a valley interrupt (INTTSG3nIVLY) at the valley timing of the 18-bit counter. Interrupts are skipped. The setting of this bit is valid only in HT-PWM mode.

Table 25.13 TSG3nCTL4 Register Contents (2/2)

Bit Position	Bit Name	Function
4 to 0	TSG3nRCC [04:00]	Specifies the skipping rate of the interrupts (INTTSG3nIPEK and INTTSG3nIVLY) and reload.

TSG3n RCC04	TSG3n RCC03	TSG3n RCC02	TSG3n RCC01	TSG3n RCC00	Skipping Rate
0	0	0	0	0	Skipping Disabled
0	0	0	0	1	1/2
0	0	0	1	0	1/3
0	0	0	1	1	1/4
:	:	:	:	:	:
1	1	1	0	1	1/30
1	1	1	1	0	1/31
1	1	1	1	1	1/32

When a write access is made (including a write of the same value to TSG3nRCC04-TSG3nRCC00) to TSG3nCTL4 during timer operation (TSG3nSTR0.TSG3nTE = 1), the interrupt skipping counter is cleared

25.3.7 TSG3nCTL5 — TSG3n Control Register5

This register controls A/D conversion trigger output (TSG3nADTRG0).

Access: This register can be read/written in 16-bit units.

Address: <TSG3n_base> +008_H

Value after reset: 0000_H

Bit	15	14	13	12	11	10	9	8	7	6	5	4	3	2	1	0
	—	—	—	—	TSG3nACC [01:00]		TSG3n AT09	TSG3n AT08	TSG3n AT07	TSG3n AT06	TSG3n AT05	TSG3n AT04	TSG3n AT03	TSG3n AT02	TSG3n AT01	TSG3n AT00
Value after reset	0	0	0	0	0	0	0	0	0	0	0	0	0	0	0	0
R/W	R	R	R	R	R/W	R/W	R/W	R/W	R/W	R/W	R/W	R/W	R/W	R/W	R/W	R/W

Table 25.14 TSG3nCTL5 Register Contents (1/3)

Bit Position	Bit Name	Function
15 to 12	Reserved	When read, the value after reset is read. When writing, write the value after reset.
11, 10	TSG3nACC [01:00]	Specifies the skipping rate of the A/D conversion trigger (TSG3nADTRG0). **TSG3nACC01 / TSG3nACC00 / Skipping Rate** 0 / 0 / Skipping Disabled 0 / 1 / 1/2 1 / 0 / 1/4 1 / 1 / 1/8 When a write access is made (including a write of the same value to TSG3nACC01 and TSG3nACC00) to TSG3nCTL5 during timer operation (TSG3nSTR0.TSG3nTE = 1), the interrupt skipping counter is cleared.
9	TSG3nAT09	Specifies generation of A/D conversion trigger (TSG3nADTRG0) at the (peak) timing when the 18-bit sub-counter switches from incrementing to decrementing. 0: Disables generation of the A/D conversion trigger at the peak timing of the 18-bit sub-counter. 1: Enables generation of the A/D conversion trigger at the peak timing of the 18-bit sub-counter. • The TSG3nAT09 bit can be set to 1 only in HT-PWM mode. In other modes, the TSG3nAT09 bit should be set to 0. • Do not set the TSG3nAT09 bit to 1 when TSG3nDTC0W is not 0000_H and TSG3nDTC1W is 0000_H. A/D conversion trigger is not generated at the peak timing of the 18-bit sub-counter even if set so.
8	TSG3nAT08	Specifies generation of A/D conversion trigger (TSG3nADTRG0) at the (valley) timing when the 18-bit sub-counter switches from decrementing to incrementing. 0: Disables generation of the A/D conversion trigger at the valley timing of the 18-bit sub-counter. 1: Enables generation of the A/D conversion trigger at the valley timing of the 18-bit sub-counter. • The TSG3nAT08 bit can be set to 1 only in HT-PWM mode. In other modes, the TSG3nAT08 bit should be set to 0. • Do not set the TSG3nAT08 bit to 1 when TSG3nDTC0W is 0000_H and TSG3nDTC1W is not 0000_H. A/D conversion trigger is not generated at the valley timing of the 18-bit sub-counter even if set so.

Table 25.14 TSG3nCTL5 Register Contents (2/3)

Bit Position	Bit Name	Function
7	TSG3nAT07	Specifies generation of A/D conversion trigger (TSG3nADTRG0) at the match timing of the 18-bit counter value during decrementation with the TSG3nDCMP2E value. 0: Disables generation of the A/D conversion trigger at the match timing of the 18-bit counter value during decrementation with the TSG3nDCMP2E value. 1: Enables generation of the A/D conversion trigger at the match timing of the 18-bit counter value during decrementation with the TSG3nDCMP2E value. This bit can be set to 1 only in HT-PWM mode. In other modes, this bit should be set to 0.
6	TSG3nAT06	Specifies generation of A/D conversion trigger (TSG3nADTRG0) at the match timing of the 18-bit counter value during incrementation with the TSG3nDCMP2E value. 0: Disables generation of the A/D conversion trigger at the match timing of the 18-bit counter value during incrementation with the TSG3nDCMP2E value. 1: Enables generation of the A/D conversion trigger at the match timing of the 18-bit counter value during incrementation with the TSG3nDCMP2E value
5	TSG3nAT05	Specifies generation of A/D conversion trigger (TSG3nADTRG0) at the match timing of the 18-bit counter value during decrementation with the TSG3nDCMP1E value. 0: Disables generation of the A/D conversion trigger at the match timing of the 18-bit counter value during decrementation with the TSG3nDCMP1E value. 1: Enables generation of the A/D conversion trigger at the match timing of the 18-bit counter value during decrementation with the TSG3nDCMP1E value. This bit can be set to 1 only in HT-PWM mode. In other modes, this bit should be set to 0.
4	TSG3nAT04	Specifies generation of A/D conversion trigger (TSG3nADTRG0) at the match timing of the 18-bit counter value during incrementation with the TSG3nDCMP1Evalue. 0: Disables generation of the A/D conversion trigger at the match timing of the 18-bit counter value during incrementation with the TSG3nDCMP1E. 1: Enables generation of the A/D conversion trigger at the match timing of the 18-bit counter value during incrementation with the TSG3nDCMP1E value.
3	TSG3nAT03	Specifies generation of A/D conversion trigger (TSG3nADTRG0) at the match timing of the 18-bit counter value during decrementation with the TSG3nDCMP0E value. 0: Disables generation of the A/D conversion trigger at the match timing of the 18-bit counter value during decrementation with the TSG3nDCMP0E value. 1: Enables generation of the A/D conversion trigger at the match timing of the 18-bit counter value during decrementation with the TSG3nDCMP0E value. This bit can be set to 1 only in HT-PWM mode. In other modes, this bit should be set to 0.

Table 25.14 TSG3nCTL5 Register Contents (3/3)

Bit Position	Bit Name	Function
2	TSG3nAT02	Specifies generation of A/D conversion trigger (TSG3nADTRG0) at the match timing of the 18-bit counter value during incrementation with the TSG3nDCMP0E value. 0: Disables generation of the A/D conversion trigger at the match timing of the 18-bit counter value during incrementation with the TSG3nDCMP0E value. 1: Enables generation of the A/D conversion trigger at the timing of the 18-bit counter value during incrementation with the TSG3nDCMP0E.
1	TSG3nAT01	Specifies generation of A/D conversion trigger (TSG3nADTRG0) at the timing (peak interrupt) when the 18-bit counter switches from incrementing to decrementing. 0: Disables generation of the A/D conversion trigger at the timing of a peak interrupt (INTTSG3nIPEK) after being skipped. 1: Enables generation of the A/D conversion trigger at the timing of a peak interrupt (INTTSG3nIPEK) after being skipped.
0	TSG3nAT00	Specifies generation of A/D conversion trigger (TSG3nADTRG0) at the timing (valley interrupt) when the 18-bit counter switches from decrementing to incrementing. 0: Disables generation of the A/D conversion trigger at the timing of a valley interrupt (INTTSG3nIVLY) after being skipped. 1: Enables generation of the A/D conversion trigger at the timing of a valley interrupt (INTTSG3nIVLY) after being skipped. This bit can be set to 1 only in HT-PWM mode. In other modes, this bit should be set to 0.

25.3.8 TSG3nCTL6 — TSG3n Control Register 6

This register controls the A/D conversion trigger output (TSG3nADTRG1).

Access: This register can be read/written in 16-bit units.

Address: <TSG3n_base> + $00C_H$

Value after reset: 0000_H

Bit	15	14	13	12	11	10	9	8	7	6	5	4	3	2	1	0
	—	—	—	—	TSG3nACC [11:10]		TSG3n AT19	TSG3n AT18	TSG3n AT17	TSG3n AT16	TSG3n AT15	TSG3n AT14	TSG3n AT13	TSG3n AT12	TSG3n AT11	TSG3n AT10
Value after reset	0	0	0	0	0	0	0	0	0	0	0	0	0	0	0	0
R/W	R	R	R	R	R/W	R/W	R/W	R/W	R/W	R/W	R/W	R/W	R/W	R/W	R/W	R/W

Table 25.15 TSG3nCTL6 Register Contents (1/3)

Bit Position	Bit Name	Function
15 to 12	Reserved	When read, the value after reset is read. When writing, write the value after reset.
11, 10	TSG3nACC [11:10]	Specifies the skipping rate of the A/D conversion trigger (TSG3nADTRG1). **TSG3nACC11 / TSG3nACC10 / Skipping Rate** 0 / 0 / Skipping Disabled 0 / 1 / 1/2 1 / 0 / 1/4 1 / 1 / 1/8 When a write access is made (including a write of the same value to TSG3nACC11 and TSG3nACC10) to TSG3nCTL6 during timer operation (TSG3nSTR0.TSG3nTE = 1), the skipping counter is cleared.
9	TSG3nAT19	Specifies generation of A/D conversion trigger (TSG3nADTRG1) at the (peak) timing when the 18-bit sub-counter switches from incrementing to decrementing. 0: Disables generation of the A/D conversion trigger at the peak timing of the 18-bit sub-counter. 1: Enables generation of the A/D conversion trigger at the peak timing of the 18-bit sub-counter. • The TSG3nAT19 bit can be set to 1 only in HT-PWM mode. In other modes, the TSG3nAT19 bit should be set to 0. • Do not set the TSG3nAT19 bit to 1 when TSG3nDTC0W is not 0000_H and TSG3nDTC1W is 0000_H. A/D conversion trigger is not generated at the peak timing of the 18-bit sub-counter even if set so.
8	TSG3nAT18	Specifies generation of A/D conversion trigger (TSG3nADTRG1) at the (valley) timing when the 18-bit sub-counter switches from decrementing to incrementing. 0: Disables generation of the A/D conversion trigger at the valley timing of the 18-bit sub-counter. 1: Enables generation of the A/D conversion trigger at the valley timing of the 18-bit sub-counter. • The TSG3nAT18 bit can be set to 1 only in HT-PWM mode. In other modes, the TSG3nAT18 bit should be set to 0. • Do not set the TSG3nAT18 bit to 1 when TSG3nDTC0W is 0000_H and TSG3nDTC1W is not 0000_H. A/D conversion trigger is not generated at the valley timing of the 18-bit sub-counter even if set so.

Table 25.15 TSG3nCTL6 Register Contents (2/3)

Bit Position	Bit Name	Function
7	TSG3nAT17	Specifies generation of A/D conversion trigger (TSG3nADTRG1) at the match timing of the 18-bit counter value during decrementation and the TSG3nDCMP2E value. 0: Disables generation of the A/D conversion trigger at the match timing of the 18-bit counter value during decrementation with the TSG3nDCMP2E value. 1: Enables generation of the A/D conversion trigger at the match timing of the 18-bit counter value during decrementation with the TSG3nDCMP2E value. This bit can be set to 1 only in HT-PWM mode. In other modes, this bit should be set to 0.
6	TSG3nAT16	Specifies generation of A/D conversion trigger (TSG3nADTRG1) at the match timing of the 18-bit counter value during incrementation with the TSG3nDCMP2E value. 0: Disables generation of the A/D conversion trigger at the match timing of the 18-bit counter value during incrementation with the TSG3nDCMP2E value. 1: Enables generation of the A/D conversion trigger at the match timing of the 18-bit counter value during incrementation with the TSG3nDCMP2E value.
5	TSG3nAT15	Specifies generation of A/D conversion trigger (TSG3nADTRG1) at the match timing of the 18-bit counter value during decrementation with the TSG3nDCMP1E value. 0: Disables generation of the A/D conversion trigger at the match timing of the 18-bit counter value during decrementation with the TSG3nDCMP1E value. 1: Enables generation of the A/D conversion trigger at the match timing of the 18-bit counter value during decrementation with the TSG3nDCMP1E value. This bit can be set to 1 only in HT-PWM mode. In other modes, this bit should be set to 0.
4	TSG3nAT14	Specifies generation of A/D conversion trigger (TSG3nADTRG1) at the match timing of the 18-bit counter value during incrementation with the TSG3nDCMP1E value. 0: Disables generation of the A/D conversion trigger at the match timing of the 18-bit counter value during incrementation with the TSG3nDCMP1E value. 1: Enables generation of the A/D conversion trigger at the match timing of the 18-bit counter value during incrementation with the TSG3nDCMP1E value.
3	TSG3nAT13	Specifies generation of A/D conversion trigger (TSG3nADTRG1) at the match timing of the 18-bit counter value during decrementation with the TSG3nDCMP0E value. 0: Disables generation of the A/D conversion trigger at the match timing of the 18-bit counter value during decrementation with the TSG3nDCMP0E value. 1: Enables generation of the A/D conversion trigger at the match timing of the 18-bit counter value during decrementation with the TSG3nDCMP0E value. This bit can be set to 1 only in HT-PWM mode. In other modes, this bit should be set to 0.

Table 25.15 TSG3nCTL6 Register Contents (3/3)

Bit Position	Bit Name	Function
2	TSG3nAT12	Specifies generation of A/D conversion trigger (TSG3nADTRG1) at the match timing of the 18-bit counter value during incrementation with the TSG3nDCMP0E. 0: Disables generation of the A/D conversion trigger at the match timing of the 18-bit counter value during incrementation with the TSG3nDCMP0E value. 1: Enables generation of the A/D conversion trigger at the match timing of the 18-bit counter value during incrementation with the TSG3nDCMP0E value.
1	TSG3nAT11	Specifies generation of A/D conversion trigger (TSG3nADTRG1) at the timing (peak interrupt) when the 18-bit counter switches from incrementing to decrementing. 0: Disables generation of the A/D conversion trigger at the timing of a peak interrupt (INTTSG3nIPEK) after being skipped. 1: Enables generation of the A/D conversion trigger at the timing of a peak interrupt (INTTSG3nIPEK) after being skipped.
0	TSG3nAT10	Specifies generation of A/D conversion trigger (TSG3nADTRG1) at the timing (valley interrupt) when the 18-bit counter switches from incrementing to decrementing. 0: Disables generation of the A/D conversion trigger at the timing of a valley interrupt (INTTSG3nIVLY) after being skipped. 1: Enables generation of the A/D conversion trigger at the timing of a valley interrupt (INTTSG3nIVLY) after being skipped. This bit can be set to 1 only in HT-PWM mode. In other modes, this bit must be set to 0.

25.3.9 TSG3nCTL7 — TSG3n Control Register 7

This register sets the level of PWM output from the TSG3O1 to TSG3O6 pins at operation start (TSG3nTE is changed from 0 to 1) and at operation restart in SP-PWM mode.

This register can be written only when SP-PWM mode is selected (TSG3nMD2 to TSG3nMD0 = 010) and the timer is stopped (TSG3nTE = 0). Do not rewrite this register when other modes are selected (PWM mode, HT-PWM mode, 120-DC mode, and HSP-PWM mode), or during operation (TSG3nTE = 1).

Access: This register can be read/written in 8-bit units.

Address: <TSG3n_base> + 218_H

Value after reset: 00_H

Bit	7	6	5	4	3	2	1	0
	—	—	—	—	—	TSG3n SPSTL2	TSG3n SPSTL1	TSG3n SPSTL0
Value after reset	0	0	0	0	0	0	0	0
R/W	R	R	R	R	R	R/W	R/W	R/W

Table 25.16 TSG3nCTL7 Register Contents

Bit Position	Bit Name	Function
7 to 3	Reserved	When read, the value after reset is read. When writing, write the value after reset.
2	TSG3nSPSTL2	SP-PWM Mode Start Level Control Bit 2 0: TSG3nO5 (W phase) is cleared and TSG3nO6 (WB phase) is set at operation start (TSG3nTE changed from 0 to 1) or restart in SP-PWM mode. 1: TSG3nO5 (W phase) is set and TSG3nO6 (WB phase) is cleared at operation start (TSG3nTE changed from 0 to 1) or restart in SP-PWM mode.
1	TSG3nSPSTL1	SP-PWM Mode Start Level Control Bit 1 0: TSG3nO3 (V phase) is cleared and TSG3nO4 (VB phase) is set at operation start (TSG3nTE changed from 0 to 1) or restart in SP-PWM mode. 1: TSG3nO3 (V phase) is set and TSG3nO4 (VB phase) is cleared at operation start (TSG3nTE changed from 0 to 1) or restart in SP-PWM mode.
0	TSG3nSPSTL0	SP-PWM Mode Start Level Control Bit 0 0: TSG3nO1 (U phase) is cleared and TSG3nO2 (UB phase) is set at operation start (TSG3nTE changed from 0 to 1) or restart in SP-PWM mode. 1: TSG3nO3 (U phase) is set and TSG3nO1 (UB phase) is cleared at operation start (TSG3nTE changed from 0 to 1) or restart in SP-PWM mode.

NOTE

The settings of bits TSG3nSPSTL2 to TSG3nSPSTL0 affect output on the TSG3nO1 to TSG3nO6 pins when operation starts or is restarted. The set dead time is always inserted at these times.

25.3.10 TSG3nCTL8 — TSG3n Control Register 8

This register specifies timer output timing when input patterns are changed in 120-DC mode.

This register can be written only when 120-DC mode is selected (TSG3nMD2-0 = 011) and the timer is stopped (TSG3nTE = 0).

Do not rewrite this register in other modes (PWM mode, SP-PMW mode, HT-PWM mode, HSP-PWM mode) or while the timer is operating (TSG3nTE = 1).

Access: This register can be read/written in 8-bit units.

Address: <TSG3n_base> +21C$_H$

Value after reset: 00$_H$

Bit	7	6	5	4	3	2	1	0
	—	—	—	—	—	—	—	TSG3n S120DCO
Value after reset	0	0	0	0	0	0	0	0
R/W	R	R	R	R	R	R	R	R/W

Table 25.17 TSG3nCTL8 Register Contents

Bit Position	Bit Name	Function
7 to 1	Reserved	When read, the value after reset is read. When writing, write the value after reset.
0	TSG3n S120DCO	120-DC Mode Control Bit 0 0: When the input patterns are changed while 120-DC mode is selected, the main counter (TSG3nCNTE) is cleared and the change of input patterns is immediately reflected to timer output. 1: When the input patterns are changed while 120-DC mode is selected, the change of input patterns is reflected to timer output after a match of the main counter (TSG3nCNTE) with TSG3nCMP0E (from the next timer period).

CAUTION

When TSG3nS120DCO is set to 1 in 120DC mode, set the TSG3nOPT0.TSG3nSOC bit to 0.

The settings of the TSG3nOPT0.TSG3nSTE and TSG3nOPT0.TSG3nPOT bits must not be changed while the timer is operating (TSG3nSTR0.TSG3nTE = 1).

25.3.11 TSG3nIOC0 — TSG3n I/O Control Register0

This register controls the timer output pins (TSG3nO1 to TSG3nO6).

Access: This register can be read/written in 8-bit units.

Address: <TSG3n_base> +200_H

Value after reset: $7E_H$

Bit	7	6	5	4	3	2	1	0
	—	TSG3nTOE6	TSG3nTOE5	TSG3nTOE4	TSG3nTOE3	TSG3nTOE2	TSG3nTOE1	—
Value after reset	0	1	1	1	1	1	1	0
R/W	R	R/W	R/W	R/W	R/W	R/W	R/W	R

Table 25.18 TSG3nIOC0 Register Contents

Bit Position	Bit Name	Function
7	Reserved	When read, the value after reset is read. When writing, write the value after reset.
6 to 1	TSG3nTOE6 to TSG3nTOE1	Enables or disables controlling of TSG3nO6 to TSG3nO1 by TSG3nIOC2. When these bits are 1, rewriting of TSG3nIOC2 is ignored. 0: Controlling is enabled. 1: Controlling is disabled.
0	Reserved	When read, the value after reset is read. When writing, write the value after reset.

CAUTION

This register should be set when the timer is stopped (TSG3nSTR0.TSG3nTE = 0). Only the same value can be written during timer operation (TSG3nSTR0.TSG3nTE = 1). If the different value is written to this register when TSG3nSTR0.TSG3nTE = 1, timer operation cannot be guaranteed. If this register is erroneously rewritten, set this register again after stopping the timer.

25.3.12 TSG3nIOC1 — TSG3n I/O Control Register1

This register controls the timer output pins (TSG3nO1 to TSG3nO6).

Access: This register can be read/written in 8-bit units.

Address: <TSG3n_base> + 204_H

Value after reset: 00_H

Bit	7	6	5	4	3	2	1	0
	—	—	—	TSG3nPTS	TSG3nEOC	TSG3nWOC	TSG3nTGS	TSG3nTOS
Value after reset	0	0	0	0	0	0	0	0
R/W	R	R	R	R/W	R/W	R/W	R/W	R/W

Table 25.19 TSG3nIOC1 Register Contents

Bit Position	Bit Name	Function
7 to 5	Reserved	When read, the value after reset is read. When writing, write the value after reset.
4	TSG3nPTS	Enables or disables output of the edge detection signal (TSG3nPTE) of TSG3nPTSI0 to TSG3nPTSI2 and two-phase encoder count signal (TSG3nPEC). 0: Disables output of the toggle signal by edge detection of TSG3nPTSI0 to TSG3nPTSI2. 1: Enables output of the toggle signal by edge detection of TSG3nPTSI0 to TSG3nPTSI2.
3	TSG3nEOC	Enables or disables detection of the error condition at the motor control. 0: Disables generation of an error interrupt (INTTSG3nIER). 1: Enables generation of an error interrupt (INTTSG3nIER). For details on controlling the error interrupt, see **Section 25.4.6.1, Error Interrupt Function**.
2	TSG3nWOC	Enables or disables detection of the warning condition at the motor control. 0: Disables generation of a warning interrupt (INTTSG3nIWN). 1: Enables generation of a warning interrupt (INTTSG3nIWN). For details on the controlling generation of warning interrupt, see **Section 25.4.6.2, Warning Interrupt Function**.
1	TSG3nTGS	Selects the A/D conversion trigger diagnostic output (TSG3nO7) signal. 0: Selects A/D conversion trigger output. 1: Selects diagnostic output.
0	TSG3nTOS	Selects the timer counter increment/decrement status output (TSG3nO0) signal. 0: Outputs the up/down count flag of the 18-bit counter. 1: Outputs the up/down count flag of the 18-bit sub-counter. • When TSG3nTOS is 0, the status of TSG3nSTR0.TSG3nCUF is output to TSG3nO0. When TSG3nTOS is 1, the status of TSG3nSTR0.TSG3nSUF is output to TSG3nO0. • The setting of this bit is valid only in HT-PWM mode.

CAUTION

This register should be set when the timer is stopped (TSG3nSTR0.TSG3nTE = 0). Only the same value can be written during timer operation (TSG3nSTR0.TSG3nTE = 1). If the different value is written to this register when TSG3nSTR0.TSG3nTE = 1, timer operation cannot be guaranteed. If this register is erroneously rewritten, set this register again after stopping the timer.

25.3.13 TSG3nIOC2 — TSG3n I/O Control Register2

This register controls the timer output pins (TSG3nO1 to TSG3nO6).

Access: This register can be read/written in 16-bit units.

Address: <TSG3n_base> + 000_H

Value after reset: 0000_H

Bit	15	14	13	12	11	10	9	8	7	6	5	4	3	2	1	0
	—	TSG3n OL6	TSG3n OL5	TSG3n OL4	TSG3n OL3	TSG3n OL2	TSG3n OL1	—	—	TSG3n TO6	TSG3n TO5	TSG3n TO4	TSG3n TO3	TSG3n TO2	TSG3n TO1	—
Value after reset	0	0	0	0	0	0	0	0	0	0	0	0	0	0	0	0
R/W	R	R/W	R/W	R/W	R/W	R/W	R/W	R	R	R/W	R/W	R/W	R/W	R/W	R/W	R

Table 25.20 TSG3nIOC2 Register Contents

Bit Position	Bit Name	Function
15	Reserved	When read, the value after reset is read. When writing, write the value after reset.
14 to 9	TSG3nOL6 to TSG3nOL1	Specifies the active level of TSG3nO6 to TSG3nO1 outputs. 0: Active level is high level 1: Active level is low level
8 to 7	Reserved	When read, the value after reset is read. When writing, write the value after reset.
6 to 1	TSG3nTO6 to TSG3nTO1	Specifies the latch level of the output buffer of the TSG3nO6 to TSG3nO1. 0: Latch level of output buffer is low level 1: Latch level of output buffer is high level
0	Reserved	When read, the value after reset is read. When writing, write the value after reset.

CAUTION

When the counting is stopped (TSG3nSTR0.TSG3nTE = 0), the TSG3nO1-6 pins maintain their previous output states. The output level should be changed by setting the TSG3nIOC0.TSG3nTOEm bit to 0, using the TSG3nTOm bit. This register can be rewritten when TSG3nIOC0.TSG3nTOEm = 0 (m = 1 to 6).

NOTE

While the timer is stopped (TSG3nSTR0.TSG3nTE = 0) and control of TSG3nOm is enabled (TSG3nIOC0.TSG3nTOEm = 0) by rewriting TSG3nIOC2, TSG3nOLm and TSG3nTOm of TSG3nIOC2 select the output level for the corresponding TSG3nOm output as listed in the table below.

TSG3nOLm	TSG3nTOm	Output level of TSG3nOm
0	0	Low level
0	1	High level
1	0	High level
1	1	Low level

25.3.14 TSG3nIOC3 — TSG3n I/O Control Register3

This register controls timer output pins (TSG3nO1 to TSG3nO6).

Access: This register can be read/written in 32-bit units.

Address: <TSG3n_base> + 074_H

Value after reset: $0000\ 0000_H$

Bit	31	30	29	28	27	26	25	24	23	22	21	20	19	18	17	16
	—	—	—	—	—	—	—	—	—	—	—	—	—	—	—	—
Value after reset	0	0	0	0	0	0	0	0	0	0	0	0	0	0	0	0
R/W	R	R	R	R	R	R	R	R	R	R	R	R	R	R	R	R

Bit	15	14	13	12	11	10	9	8	7	6	5	4	3	2	1	0
	—	—	—	—	—	—	—	—	—	TSG3n TOL6	TSG3n TOL5	TSG3n TOL4	TSG3n TOL3	TSG3n TOL2	TSG3n TOL1	—
Value after reset	0	0	0	0	0	0	0	0	0	0	0	0	0	0	0	0
R/W	R	R	R	R	R	R	R	R	R	R/W	R/W	R/W	R/W	R/W	R/W	R

Table 25.21 TSG3nIOC3 Register Contents

Bit Position	Bit Name	Function
31 to 7	Reserved	When read, the value after reset is read. When writing, write the value after reset.
6 to 1	TSG3nTOL6 to TSG3nTOL1	Controls the set/clear level of output. 0: Outputs the normal level. 1: Outputs the reversed level. Setting of this bit is reflected at the start of output. The change of the output level is reflected at the next compare match timing after the change.
0	Reserved	When read, the value after reset is read. When writing, write the value after reset.

CAUTION

TSG3nTOL6 to 1 should be set to 0 in HT-PWM mode and HSP-PWM mode.

25.3.15 TSG3nSTR0 — TSG3n Status Register 0

This register controls the flags.

Access: This register can be read only in 8-bit units.

Address: <TSG3n_base> + 010_H

Value after reset: 00_H

Bit	7	6	5	4	3	2	1	0
	—	—	—	—	TSG3nCUF	TSG3nSUF	TSG3nRSF	TSG3nTE
Value after reset	0	0	0	0	0	0	0	0
R/W	R	R	R	R	R	R	R	R

Table 25.22 TSG3nSTR0 Register Contents

Bit Position	Bit Name	Function
7 to 4	Reserved	When read, the value after reset is read.
3	TSG3nCUF	Indicates the count direction of the 18-bit counter. 0: The 18-bit counter is incremented. 1: The 18-bit counter is decremented. TSG3nCUF is valid only in HT-PWM mode. In other modes, it is invalid (TSG3nCUF = 0).
2	TSG3nSUF	Indicates the count direction of the 18-bit sub-counter. 0: The 18-bit sub-counter is incremented. 1: The 18-bit sub-counter is decremented. • TSG3nSUF detects counting of the 18-bit sub-counter from 0000_H to (TSG3nCMP0E value - 0002_H) as up-counting, and counting from the TSG3nCMP0E value to 0002_H as down-counting. • This bit is valid only in HT-PWM mode.
1	TSG3nRSF	Indicates whether there is a reload request. 0: No reload request or reload has completed. 1: There is a reload request. • This bit is valid only in TSG3nRMC = 0. • This bit indicates that the data to be transferred next is held. • This bit is set to 1 by writing to registers to be reloaded, and cleared to 0 when reload has completed. • When TSG3nRMC is changed from 0 to 1 in HT-PWM mode, TSG3nRSF is cleared to 0. For registers to be reloaded, see **Section 25.3.1, List of Registers**.
0	TSG3nTE	Indicates the TSG3n operation status. 0: TSG3n is stopped. 1: TSG3n is operating. This bit is set when TSG3nTRG0.TSG3nTS = 1, and cleared when TSG3nTRG1.TSG3nTT = 1.

25.3.16 TSG3nSTR1 — TSG3n Status Register 1

This register controls the flags.

Access: This register can be read only in 8-bit units.

Address: <TSG3n_base> + 014_H

Value after reset: 00_H

Bit	7	6	5	4	3	2	1	0
	—	—	—	—	TSG3nTSF	TSG3nOPF[2:0]		
Value after reset	0	0	0	0	0	0	0	0
R/W	R	R	R	R	R	R	R	R

Table 25.23 TSG3nSTR1 Register Contents

Bit Position	Bit Name	Function
7 to 4	Reserved	When read, the value after reset is read.
3	TSG3nTSF	Indicates the pattern change order of TSG3nPTSI0 to TSG3nPTSI2. 0: Indicates that patterns are input to TSG3nPTSI0 to TSG3nPTSI2 in the normal rotation pattern order 1: Indicates that patterns are input to TSG3nPTSI0 to TSG3nPTSI2 in the reverse rotation pattern order. Normal Rotation → Reverse Rotation ← TSG3nPTSI2-TSG3nPTSI0: [1,0,1] [1,0,0] [1,1,0] [0,1,0] [0,1,1] [0,0,1] Normal or reverse rotation can be detected from the first change of TSG3nPTSI0 to TSG3nPTSI2 after TSG3nTRG0.TSG3nTS has been set to 1. For details, see **Section 25.4.3.5 (b), Detection of Input Pattern Order**.
2 to 0	TSG3nOPF [2:0]	Indicates the output pattern of the timer output pins (TSG3nO1 to TSG3nO6).

25.3.17 TSG3nSTR2 — TSG3n Status Register 2

This register controls the flags.

Access: This register can be read only in 16-bit units.

Address: <TSG3n_base> + 018_H

Value after reset: 0000_H

Bit	15	14	13	12	11	10	9	8	7	6	5	4	3	2	1	0
	—	—	—	—	—	—	TSG3n TBF2	TSG3n TBF1	TSG3n TBF0	TSG3n PPF	TSG3n PEF	TSG3n TDF	TSG3n NDF	TSG3n PRF	TSG3n PTF	—
Value after reset	0	0	0	0	0	0	0	0	0	0	0	0	0	0	0	0
R/W	R	R	R	R	R	R	R	R	R	R	R	R	R	R	R	R

Table 25.24 TSG3nSTR2 Register Contents (1/3)

Bit Position	Bit Name	Function
15 to 10	Reserved	When read, the value after reset is read.
9	TSG3nTBF2	Indicates whether the simultaneous active state of the positive phase and inverse phase is detected when TSG3nCTL1.TSG3nTBA2 is 1. 0: Positive phase (TSG3nO5) and inverse phase (TSG3nO6) are not active simultaneously. 1: Positive phase (TSG3nO5) and inverse phase (TSG3nO6) are active simultaneously. • TSG3nTBF2 is set to 1 when the simultaneous active state of the positive phase (TSG3nO5) and inverse phase (TSG3nO6) is detected, and an error interrupt (INTTSG3nIER) is generated. TSG3nTBF2 can be cleared by changing TSG3nSTR0.TSG3nTE from 0 to 1 (operation start) or by writing 1 to TSG3nSTC.TSG3nTBR2. • The simultaneous active state is not detected when TSG3nTBA2 = 0.
8	TSG3nTBF1	Indicates whether the simultaneous active state of the positive phase and inverse phase is detected when TSG3nCTL1.TSG3nTBA1 is 1. 0: Positive phase (TSG3nO3) and inverse phase (TSG3nO4) are not active simultaneously. 1: Positive phase (TSG3nO3) and inverse phase (TSG3nO4) are active simultaneously. • TSG3nTBF1 is set to 1 when the simultaneous active state of the positive phase (TSG3nO3) and inverse phase (TSG3nO4) is detected, and an error interrupt (INTTSG3nIER) is generated. TSG3nTBF1 can be cleared by changing TSG3nSTR0.TSG3nTE from 0 to 1 (operation start) or by writing 1 to TSG3nSTC.TSG3nTBR1. • The simultaneous active state is not detected when TSG3nTBA1 = 0.
7	TSG3nTBF0	Indicates whether the simultaneous active state of the positive phase and inverse phase is detected when TSG3nCTL1.TSG3nTBA0 is 1. 0: Positive phase (TSG3nO1) and inverse phase (TSG3nO2) are not active simultaneously. 1: Positive phase (TSG3nO1) and inverse phase (TSG3nO2) are active simultaneously. • TSG3nTBF0 is set to 1 when the simultaneous active state of the positive phase (TSG3nO1) and inverse phase (TSG3nO2) is detected, and an error interrupt (INTTSG3nIER) is generated. TSG3nTBF0 can be cleared by changing TSG3nSTR0.TSG3nTE from 0 to 1 (operation start) or by writing 1 to TSG3nSTC.TSG3nTBR0. • The simultaneous active state is not detected when TSG3nTBA0 = 0.

Table 25.24 TSG3nSTR2 Register Contents (2/3)

Bit Position	Bit Name	Function
6	TSG3nPPF	Indicates detection of the difference between the input patterns (TSG3nPTSI0 to TSG3nPTSI2) and the output patterns (TSG3nO1 to TSG3nO6) after they are compared. 0: No phase difference detected between the input patterns (TSG3nPTSI0 to TSG3nPTSI2) and the output patterns (TSG3nO1 to TSG3nO6). 1: A phase difference detected between the input patterns (TSG3nPTSI0 to TSG3nPTSI2) and the output patterns (TSG3nO1 to TSG3nO6). • TSG3nPPF is set to 1 when a difference between input and output patterns is detected, and a warning interrupt (INTTSG3nIWN) is generated. This bit can be cleared either by changing TSG3nSTR0.TSG3nTE from 0 to 1 (starting operation), setting TSG3nTRG0.TSG3nTS to 1 (starting the timer), input to TSG3nTSST (restarting the timer), or writing 1 to TSG3nSTC.TSG3nPPR.
5	TSG3nPEF	Indicates whether an abnormal input (000_B or 111_B is input to TSG3nPTSI0 to TSG3nPTSI2) is detected. 0: No abnormal input (000_B or 111_B) to TSG3nPTSI0 to TSG3nPTSI2 detected. 1: Abnormal input (000_B or 111_B) to TSG3nPTSI0 to TSG3nPTSI2 detected. TSG3nPEF is set to 1 when an input of 000_B or 111_B to TSG3nPTSI0 to TSG3nPTSI2 is detected, and a warning interrupt (INTTSG3nIWN) is generated. TSG3nPEF can be cleared by changing TSG3nSTR0.TSG3nTE from 0 to 1 (starting operation), by setting TSG3nTRG0.TSG3nTS to 1 (starting timer operation), by input to TSG3nTSST (restarting the timer), or by writing 1 to TSG3nSTC.TSG3nPER. TSG3nPEF is valid when TSG3nCTL1.TSG3nPEC = 1.
4	TSG3nTDF	Indicates whether simultaneous generation of the TSG3nOPCI0 and TSG3nOPCI1 triggers is detected. 0: Simultaneous generation of the TSG3nOPCI0 and TSG3nOPCI1 triggers not detected. 1: Simultaneous generation of the TSG3nOPCI0 and TSG3nOPCI1 triggers detected. TSG3nTDF is set to 1 when simultaneous generation of the TSG3nOPCI0 and TSG3nOPCI1 triggers is detected, and a warning interrupt (INTTSG3nIWN) is generated. TSG3nTDF can be cleared by changing TSG3nSTR0.TSG3nTE from 0 to 1 (starting operation), by setting TSG3nTRG0.TSG3nTS to 1 (starting timer operation), by input to TSG3nTSST (restarting the timer), or by writing 1 to TSG3nSTC.TSG3nTDR. TSG3nTDF is valid when TSG3nCTL1.TSG3nTDC = 1.
3	TSG3nNDF	Indicates whether noise on TSG3nPTSI0 to TSG3nPTSI2 is detected. 0: Noise on TSG3nPTSI0 to TSG3nPTSI2 due to simultaneous change of two or more pins not detected. 1: Noise on TSG3nPTSI0 to TSG3nPTSI2 due to simultaneous change of two or more pins detected. TSG3nNDF is set to 1 when simultaneous change of two or more pins in TSG3nPTSI0 to TSG3nPTSI2 is detected, and a warning interrupt (INTTSG3nIWN) is generated. TSG3nNDF can be cleared by changing TSG3nSTR0.TSG3nTE from 0 to 1 (starting operation), by setting TSG3nTRG0.TSG3nTS to 1(starting timer operation), by input to TSG3nTSST (restarting the timer), or by writing 1 to TSG3nSTC.TSG3nNDR. TSG3nNDF is valid when TSG3nCTL1.TSG3nNDC = 1.

Table 25.24 TSG3nSTR2 Register Contents (3/3)

Bit Position	Bit Name	Function
2	TSG3nPRF	Indicates whether reversal of the TSG3nPTSI0 to TSG3nPTSI2 input order is detected. 0: The reversal of the TSG3nPTSI0 TSG3nPTSI2 input order not detected. 1: The reversal of the TSG3nPTSI0 to TSG3nPTSI2 input order detected. TSG3nPRF is set to 1 when TSG3nSTR1.TSG3nTSF changes, and a warning interrupt (INTTSG3nIWN) is generated. TSG3nPRF can be cleared by changing TSG3nSTR0.TSG3nTE from 0 to 1 (operation start), by setting TSG3nTRG0.TSG3nTS to 1 (timer operation start), by input to TSG3nTSST(timer restart), or by writing 1 to TSG3nSTC.TSG3nPRR. Detection is possible from the second TSG3nPTSI0 to TSG3nPTSI2 change timing after setting TSG3nTRG0.TSG3nTS = 1. TSG3nPRF is valid when TSG3nCTL1.TSG3nPRC = 1.
1	TSG3nPTF	Indicates whether an abnormal toggle of TSG3nPTSI0 to TSG3nPTSI2 is detected. 0: No abnormal toggle of TSG3nPTSI0 to TSG3nPTSI2 detected. 1: An abnormal toggle of TSG3nPTSI0 to TSG3nPTSI2 detected. TSG3nPTF is set to 1 when TSG3nPTSI0 to TSG3nPTSI2 (TSG3nPTE signal toggle) are changed three times or more during TSG3nOPCI0 trigger or TSG3nPTSI0 to TSG3nPTSI2 (TSG3nPTE signal toggle) are changed three times or more during TSG3nOPCI1 trigger, and a warning interrupt (INTTSG3nIWN) is generated. TSG3nPTF can be cleared by changing TSG3nSTR0.TSG3nTE from 0 to 1 (starting operation), by setting TSG3nTRG0.TSG3nTS to 1 (starting timer operation), by input to TSG3nTSST (restarting the timer), or by writing 1 to TSG3nSTC.TSG3nPTR. TSG3nPTF is valid when TSG3nCTL1.TSG3nPTC[1:0] = 10_B or 11_B.
0	Reserved	When read, the value after reset is read.

25.3.18 TSG3nSTC — TSG3n Status Clear Trigger Register

This register controls the flags.

Access: This register can be written only in 16-bit units.

Address: <TSG3n_base> + $01C_H$

Value after reset: 0000_H

Bit	15	14	13	12	11	10	9	8	7	6	5	4	3	2	1	0
	—	—	—	—	—	—	TSG3n TBR2	TSG3n TBR1	TSG3n TBR0	TSG3n PPR	TSG3n PER	TSG3n TDR	TSG3n NDR	TSG3n PRR	TSG3n PTR	—
Value after reset	0	0	0	0	0	0	0	0	0	0	0	0	0	0	0	0
R/W	R	R	R	R	R	R	W	W	W	W	W	W	W	W	W	R

Table 25.25 TSG3nSTC Register Contents (1/2)

Bit Position	Bit Name	Function
15 to 10	Reserved	When writing, write the value after reset.
9	TSG3nTBR2	This is a trigger bit that clears TSG3nSTR2.TSG3nTBF2. 0: Does not clear TSG3nTBF2. 1: Clears TSG3nTBF2. When TSG3nTBR2 writing and TSG3nSTR2.TSG3nTBF2 setting occur simultaneously, TSG3nSTR2.TSG3nTBF2 setting has a priority, and the flag is not cleared.
8	TSG3nTBR1	This is a trigger bit that clears TSG3nSTR2.TSG3nTBF1. 0: Does not clear TSG3nTBF1. 1: Clears TSG3nTBF1. When TSG3nTBR1 writing and TSG3nSTR2.TSG3nTBF1 setting occur simultaneously, TSG3nSTR2.TSG3nTBF1 setting has a priority, and the flag is not cleared.
7	TSG3nTBR0	This is a trigger bit that clears TSG3nSTR2.TSG3nTBF0. 0: Does not clear TSG3nTBF0. 1: Clears TSG3nTBF0. When TSG3nTBR0 writing and TSG3nSTR2.TSG3nTBF0 setting occur simultaneously, TSG3nSTR2.TSG3nTBF0 setting has a priority, and the flag is not cleared.
6	TSG3nPPR	This is a trigger bit that clears TSG3nSTR2.TSG3nPPF. 0: Does not clear TSG3nPPF. 1: Clears TSG3nPPF. When TSG3nPPR writing and TSG3nSTR2.TSG3nPPF setting occur simultaneously, TSG3nSTR2.TSG3nPPF setting has a priority, and the flag is not cleared.
5	TSG3nPER	This is a trigger bit that clears TSG3nSTR2.TSG3nPEF. 0: Does not clear TSG3nPEF. 1: Clears TSG3nPEF. When TSG3nPER writing and TSG3nSTR2.TSG3nPEF setting occur simultaneously, TSG3nSTR2.TSG3nPEF setting has a priority, and the flag is not cleared.
4	TSG3nTDR	This is a trigger bit that clears TSG3nSTR2.TSG3nTDF. 0: Does not clear TSG3nTDF. 1: Clears TSG3nTDF. When TSG3nTDR writing and TSG3nSTR2.TSG3nTDF setting occur simultaneously, TSG3nSTR2.TSG3nTDF setting has a priority, and the flag is not cleared.

Table 25.25 TSG3nSTC Register Contents (2/2)

Bit Position	Bit Name	Function
3	TSG3nNDR	This is a trigger bit that clears TSG3nSTR2.TSG3nNDF. 0: Does not clear TSG3nNDF. 1: Clears TSG3nNDF. When TSG3nNDR writing and TSG3nSTR2.TSG3nNDF setting occur simultaneously, TSG3nSTR2.TSG3nNDF setting has a priority, and the flag is not cleared.
2	TSG3nPRR	This is a trigger bit that clears TSG3nSTR2.TSG3nPRF. 0: Does not clear TSG3nPRF. 1: Clears TSG3nPRF. When TSG3nPRR writing and TSG3nSTR2.TSG3nPRF setting occur simultaneously, TSG3nSTR2.TSG3nPRF setting has a priority, and the flag is not cleared.
1	TSG3nPTR	This is a trigger bit that clears TSG3nSTR2.TSG3nPTF. 0: Does not clear TSG3nPTF. 1: Clears TSG3nPTF. When TSG3nPTR writing and TSG3nSTR2.TSG3nPTF setting occur simultaneously, TSG3nSTR2.TSG3nPTF setting has a priority, and the flag is not cleared.
0	Reserved	When writing, write the value after reset.

25.3.19 TSG3nOPT0 — TSG3n Option Register 0

This register sets the optional functions.

Access: This register can be read/written in 8-bit units.

Address: <TSG3n_base> + 020_H

Value after reset: 00_H

Bit	7	6	5	4	3	2	1	0
	—	TSG3nSOC	TSG3nSTE	TSG3nPOT	TSG3nPSS	TSG3nIDC	TSG3nPSC	—
Value after reset	0	0	0	0	0	0	0	0
R/W	R	R/W	R/W	R/W	R/W	R/W	R/W	R

Table 25.26 TSG3nOPT0 Register Contents (1/2)

Bit Position	Bit Name	Function
7	Reserved	When read, the value after reset is read. When writing, write the value after reset.
6	TSG3nSOC	Enables or disables control of the timer output (TSG3nO1 to TSG3nO6 pins) by software. 0: Disables control by software. 1: Enables control by software. When TSG3nSOC is set to 1, timer output is switched to the software control/ trigger control output pattern specified by TSG3nSPC2 to TSG3nSPC0. The dead time is secured by the dead time counter.
5	TSG3nSTE	Enables or disables control by the pattern output trigger. 0: Disables the TSG3nPTSI0 to TSG3nPTSI2 and TSG3nOPCI0, and TSG3nOPCI1 inputs. 1: Enables TSG3nPTSI0 to TSG3nPTSI2 and TSG3nOPCI0, and TSG3nOPCI1 inputs. • The pattern output trigger is selected by TSG3nPOT. • TSG3nSTE is valid in 120-DC mode and when software output control function is enabled.
4	TSG3nPOT	Selects the pattern output trigger. 0: Switches the output pattern by the external pattern input pins (TSG3nPTSI0 to TSG3nPTSI2) (pattern switch method). 1: Switches the output pattern by the rising edge of the TSG3nOPCI0 and TSG3nOPCI1 (trigger switch method).
3	TSG3nPSS	Selects the pattern output order switch factor. 0: The pattern output order is not switched by TSG3nPSC. 1: The pattern output order is switched by TSG3nPSC.
2	TSG3nIDC	Determines the output pattern from the TSG3nO1 to TSG3nO6 pins in combination with the TSG3nIDC and TSG3nSTR1.TSG3nTSF and TSG3nPSC signals. For the timer output order and patterns to be output, see **Figure 25.80** to **Figure 25.83**, Example of Operation in 120-DC Mode, in **Section 25.4.7.4 (5), Operation in 120-DC Mode**.

Table 25.26 TSG3nOPT0 Register Contents (2/2)

Bit Position	Bit Name	Function
1	TSG3nPSC	Selects the pattern output order when the semi-automatic cruise function is enabled. 0: Switches the timer output (TSG3nO1 to TSG3nO6) in the normal rotation. 1: Switches the timer output (TSG3nO1 to TSG3nO6) in the reverse rotation. • TSG3nPSC specifies the timer output pattern order assuming the output pattern specified by TSG3nSPC2 to TSG3nSPC0 as the initial pattern. TSG3nPSC is valid when TSG3nPOT = 1 and TSG3nPSS = 1. • It is recommended to rewrite TSG3nPSC when TSG3nSTR0.TSG3nTE = 0 or TSG3nPOT = 0. If TSG3nPSC is rewritten when TSG3nPOT = 1, the unexpected timer output pattern might be caused. • If the signal input to TSG3nPTSI0 to TSG3nPTSI2 changes with TSG3n operation being stopped (TSG3nSTR0.TSG3nTE = 0), the TSG3nTRG0.TSG3nTS bit should be set to 1 after matching the input signal change logic with the TSG3nPSC order. • For output order in normal or reverse rotation, see **Section 25.4.7.4, 120-DC Mode**. Here, normal rotation and reverse rotation refer to the change of output, and they are different from normal rotation and reverse rotation of a motor.
0	Reserved	When read, the value after reset is read. When writing, write the value after reset.

25.3.20 TSG3nOPT1 — TSG3n Option Register 1

This register sets the optional functions.

Access: This register can be read/written in 8-bit units.

Address: <TSG3n_base> +024_H

Value after reset: 00_H

Bit	7	6	5	4	3	2	1	0
	—	—	—	—	—	TSG3nSPC[2:0]		
Value after reset	0	0	0	0	0	0	0	0
R/W	R	R	R	R	R	R/W	R/W	R/W

Table 25.27 TSG3nOPT1 Register Contents

Bit Position	Bit Name	Function
7 to 3	Reserved	When read, the value after reset is read. When writing, write the value after reset.
2 to 0	TSG3nSPC [2:0]	Specifies the timer output pattern when software output function is enabled and in 120-DC mode. For the output pattern, see **Section 25.4.7.8, Software Output Control Function**, and **Section 25.4.7.4, 120-DC Mode**.

25.3.21 TSG3nTRG0 — TSG3n Trigger Register 0

This register controls the start of the timer.

Access: This register can be written only in 8-bit units.

Address: <TSG3n_base> + 030_H

Value after reset: 00_H

Bit	7	6	5	4	3	2	1	0
	—	—	—	—	—	—	—	TSG3nTS
Value after reset	0	0	0	0	0	0	0	0
R/W	R	R	R	R	R	R	R	W

Table 25.28 TSG3nTRG0 Register Contents

Bit Position	Bit Name	Function
7 to 1	Reserved	When writing, write the value after reset.
0	TSG3nTS	This bit is a trigger bit that controls the start of the timer. 0: The timer is not started. 1: The timer is started (restarted if TSG3nSTR0.TSG3nTE = 1). When restarted, the 18-bit counter is initialized. This bit is always read as 0.

25.3.22 TSG3nTRG1 — TSG3n Trigger Register 1

This register controls the stop of the timer.

Access: This register can be written only in 8-bit units.

Address: <TSG3n_base> +034_H

Value after reset: 00_H

Bit	7	6	5	4	3	2	1	0
	—	—	—	—	—	—	—	TSG3nTT
Value after reset	0	0	0	0	0	0	0	0
R/W	R	R	R	R	R	R	R	W

Table 25.29 TSG3nTRG1 Register Contents

Bit Position	Bit Name	Function
7 to 1	Reserved	When writing, write the value after reset.
0	TSG3nTT	This is a trigger bit that controls the stop of the timer. 0: The timer is not stopped. 1: The timer is stopped (TSG3nSTR0.TSG3nTE = 0). This bit is always read as 0.

25.3.23 TSG3nTRG2 — TSG3n Trigger Register 2

TSG3nTRG2 is a trigger bit to reflect the PWM duty setting to TSG3nO1-6 in anytime rewrite mode of HT-PWM mode.

This register can be set to 1 only in HT-PWM mode and when anytime rewrite mode is selected (TSG3nRMC = 1). Do not rewrite this register in other modes (PWM mode, SP-PMW mode, 120-DC mode, HSP-PWM mode) or when reload mode is selected (TSG3nRMC = 0)

Access: This register can be written only in 8-bit units.

Address: <TSG3n_base> + 038_H

Value after reset: 00_H

Bit	7	6	5	4	3	2	1	0
	—	—	—	—	—	—	—	TSG3nIMT
Value after reset	0	0	0	0	0	0	0	0
R/W	R	R	R	R	R	R	R	W

Table 25.30 TSG3nTRG2 Register Contents

Bit Position	Bit Name	Function
7 to 1	Reserved	When writing, write the value after reset.
0	TSG3nIMT	Anytime Rewrite Trigger 0: Disabled 1: Changes in duty settings for U, V, and W phases are reflected to timer output in HT-PWM mode and when anytime rewrite mode is selected.

25.3.24 TSG3nCNT — TSG3n Counter Read Buffer Register

This register can access the 16 lower-order bits of the 18-bit register TSG3nCNTE.

For the operation of this register, see **Section 25.3.25, TSG3nCNTE — TSG3n Bit-Extended Counter Read Buffer Register**.

Access: This register can be read only in 16-bit units.

Address: <TSG3n_base> + 028_H

Value after reset: 0000_H

Bit	15	14	13	12	11	10	9	8	7	6	5	4	3	2	1	0
	16-bit counter															
Value after reset	0	0	0	0	0	0	0	0	0	0	0	0	0	0	0	0
R/W	R	R	R	R	R	R	R	R	R	R	R	R	R	R	R	R

25.3.25 TSG3nCNTE — TSG3n Bit-Extended Counter Read Buffer Register

The counter values can be read from this register. This register mirrors the contents of TSG3nCNT from which the 16 lower-order bits of this register can be accessed.

Access: This register can be read only in 32-bit units.

Address: <TSG3n_base> + $1A0_H$

Value after reset: $0000\ 0000_H$

Bit	31	30	29	28	27	26	25	24	23	22	21	20	19	18	17	16
	—	—	—	—	—	—	—	—	—	—	—	—	—	—	TSG3nCNTE (18-bit counter)	
Value after reset	0	0	0	0	0	0	0	0	0	0	0	0	0	0	0	0
R/W	R	R	R	R	R	R	R	R	R	R	R	R	R	R	R	R

Bit	15	14	13	12	11	10	9	8	7	6	5	4	3	2	1	0
	TSG3nCNTE (18-bit counter)															
Value after reset	0	0	0	0	0	0	0	0	0	0	0	0	0	0	0	0
R/W	R	R	R	R	R	R	R	R	R	R	R	R	R	R	R	R

18-bit counter

This register is a timer read buffer register from which the 18-bit counter value can be read. In HT-PWM mode, the 18-bit counter provides the triangular waveform control in which the counter value is incremented and decremented by 2. Bit 0 is always read as 0.

In other modes, the 18-bit counter provides the sawtooth waveform control in which the counter value is incremented by 1.

Table 25.31 TSG3nCNTE Register Count Value

Operating mode	At the Beginning	Minimum Value	Maximum value
HT-PWM mode	TSG3nDTC0	TSG3nDTC0	TSG3nDTC0+TSG3nCMP0E[*1]
Other modes	00000_H	00000_H	TSG3nCMP0E

Note 1. Set the value as TSG3nDTC0+TSG3nCMP0E < $3FFFF_H$.

25.3.26 TSG3nSBC — TSG3n Sub-Counter Read Buffer Register

This register can access the 16 lower-order bits of the 18-bit register TSG3nSBCE.

For the operation of this register, see **Section 25.3.27, TSG3nSBCE — TSG3n Bit Extended Sub-Counter Read Buffer Register**.

Access: This register can be read only in 16-bit units.

Address: <TSG3n_base> + $02C_H$

Value after reset: 0000_H

Bit	15	14	13	12	11	10	9	8	7	6	5	4	3	2	1	0
	16-bit sub-counter															
Value after reset	0	0	0	0	0	0	0	0	0	0	0	0	0	0	0	0
R/W	R	R	R	R	R	R	R	R	R	R	R	R	R	R	R	R

25.3.27 TSG3nSBCE — TSG3n Bit Extended Sub-Counter Read Buffer Register

The sub-counter values can be read from this register. This register mirrors the contents of TSG3nSBC from which the 16 lower-order bits of this register can be accessed.

Access: This register can be read only in 32-bit units.

Address: <TSG3n_base> + $1A4_H$

Value after reset: $0000\ 0000_H$

Bit	31	30	29	28	27	26	25	24	23	22	21	20	19	18	17	16
	—	—	—	—	—	—	—	—	—	—	—	—	—	—	TSG3nSBCE (18-bit sub-counter)	
Value after reset	0	0	0	0	0	0	0	0	0	0	0	0	0	0	0	0
R/W	R	R	R	R	R	R	R	R	R	R	R	R	R	R	R	R

Bit	15	14	13	12	11	10	9	8	7	6	5	4	3	2	1	0
	TSG3nSBCE (18-bit sub-counter)															
Value after reset	0	0	0	0	0	0	0	0	0	0	0	0	0	0	0	0
R/W	R	R	R	R	R	R	R	R	R	R	R	R	R	R	R	R

18-bit counter

This register is a timer read buffer register from which the 18-bit sub-counter value can be read. In HT-PWM mode, the 18-bit counter provides the triangular waveform control in which the counter value is incremented and decremented by 2. Bit 0 is always read as 0. (Available only in HT-PWM mode.).

Table 25.32 TSG3nSBCE Register Count Value

Operating mode	At the Beginning	Minimum Value	Maximum VAlue
HT-PWM mode	TSG3nDTC0	00000_H	TSG3nDTC0 + TSG3nDTC1 + TSG3nCMP0E*[1]
Other modes	00000_H	00000_H	00000_H

Note 1. Set the value as TSG3nDTC0 + TSG3nDTC1 + TSG3nCMP0E < $3FFFF_H$.

25.3.28 TSG3nCMP0 — TSG3n Compare Register 0

This register can access the 16 lower-order bits of the 18-bit register TSG3nCMP0E.

For the operation of this register, see **Section 25.3.29, TSG3nCMP0E — TSG3n Bit Extended Compare Register 0**.

Access: This register can be read/written in 32-bit units.

Address: <TSG3n_base> + 058_H

Value after reset: $0000\ 0000_H$

Bit	31	30	29	28	27	26	25	24	23	22	21	20	19	18	17	16
	—	—	—	—	—	—	—	—	—	—	—	—	—	—	—	—
Value after reset	0	0	0	0	0	0	0	0	0	0	0	0	0	0	0	0
R/W	R	R	R	R	R	R	R	R	R	R	R	R	R	R	R	R

Bit	15	14	13	12	11	10	9	8	7	6	5	4	3	2	1	0
	16-bit compare register															
Value after reset	0	0	0	0	0	0	0	0	0	0	0	0	0	0	0	0
R/W	R/W	R/W	R/W	R/W	R/W	R/W	R/W	R/W	R/W	R/W	R/W	R/W	R/W	R/W	R/W	R/W

25.3.29 TSG3nCMP0E — TSG3n Bit Extended Compare Register 0

This register is an 18-bit compare register that specifies the PWM period in all modes. This register mirrors the contents of TSG3nCMP0 from which the 16 lower-order bits of this register can be accessed.

Access: This register can be read/written in 32-bit units.

Address: <TSG3n_base> +$14C_H$

Value after reset: $0000\ 0000_H$

Bit	31	30	29	28	27	26	25	24	23	22	21	20	19	18	17	16
	—	—	—	—	—	—	—	—	—	—	—	—	—	—	TSG3nCMP0E (18-bit compare register)	
Value after reset	0	0	0	0	0	0	0	0	0	0	0	0	0	0	0	0
R/W	R	R	R	R	R	R	R	R	R	R	R	R	R	R	R/W	R/W

Bit	15	14	13	12	11	10	9	8	7	6	5	4	3	2	1	0
	TSG3nCMP0E (18-bit compare register)															
Value after reset	0	0	0	0	0	0	0	0	0	0	0	0	0	0	0	0
R/W	R/W	R/W	R/W	R/W	R/W	R/W	R/W	R/W	R/W	R/W	R/W	R/W	R/W	R/W	R/W	R/W

Table 25.33 TSG3nCMP0E Register Setting

Operating mode	At the Beginning	Minimum Value	Maximum Value
HT-PWM mode	TSG3nCMP0E*1	00002_H	$3FFFE_H$
Other modes	TSG3nCMP0E + 1	1 (TSG3nCMP0E = 00000_H)	40000_H (TSG3nCMP0E = $3FFFF_H$)

Note 1. In HT-PWM mode, the lowest order bit is ignored.

25.3.30 TSG3nCMP1W — TSG3n Compare Register 1, 2

This register can access the 16 lower-order bits of the 18-bit register TSG3nCMP1E and TSG3nCMP2E.

For the operation of this register, see **Section 25.3.37, TSG3nCMP1E to TSG3nCMP12E — TSG3n Bit Extended Compare Registers 1 to 12**.

Access: This register can be read/written in 32-bit units.

Address: <TSG3n_base> + 040_H

Value after reset: $0000\ 0000_H$

Bit	31	30	29	28	27	26	25	24	23	22	21	20	19	18	17	16
	TSG3nCMP2 (16-bit compare register)															
Value after reset	0	0	0	0	0	0	0	0	0	0	0	0	0	0	0	0
R/W	R/W	R/W	R/W	R/W	R/W	R/W	R/W	R/W	R/W	R/W	R/W	R/W	R/W	R/W	R/W	R/W

Bit	15	14	13	12	11	10	9	8	7	6	5	4	3	2	1	0
	TSG3nCMP1 (16-bit compare register)															
Value after reset	0	0	0	0	0	0	0	0	0	0	0	0	0	0	0	0
R/W	R/W	R/W	R/W	R/W	R/W	R/W	R/W	R/W	R/W	R/W	R/W	R/W	R/W	R/W	R/W	R/W

25.3.31 TSG3nCMP3W — TSG3n Compare Register 3, 4

This register can access the 16 lower-order bits of the 18-bit register TSG3nCMP3E and TSG3nCMP4E.

For the operation of this register, see **Section 25.3.37, TSG3nCMP1E to TSG3nCMP12E — TSG3n Bit Extended Compare Registers 1 to 12**.

Access: This register can be read/written in 32-bit units.

Address: <TSG3n_base> + $04C_H$

Value after reset: $0000\ 0000_H$

Bit	31	30	29	28	27	26	25	24	23	22	21	20	19	18	17	16
	TSG3nCMP4 (16-bit compare register)															
Value after reset	0	0	0	0	0	0	0	0	0	0	0	0	0	0	0	0
R/W	R/W	R/W	R/W	R/W	R/W	R/W	R/W	R/W	R/W	R/W	R/W	R/W	R/W	R/W	R/W	R/W

Bit	15	14	13	12	11	10	9	8	7	6	5	4	3	2	1	0
	TSG3nCMP3 (16-bit compare register)															
Value after reset	0	0	0	0	0	0	0	0	0	0	0	0	0	0	0	0
R/W	R/W	R/W	R/W	R/W	R/W	R/W	R/W	R/W	R/W	R/W	R/W	R/W	R/W	R/W	R/W	R/W

25.3.32 TSG3nCMP5W — TSG3n Compare Register 5, 6

This register can access the 16 lower-order bits of the 18-bit register TSG3nCMP5E and TSG3nCMP6E.

For the operation of this register, see **Section 25.3.37, TSG3nCMP1E to TSG3nCMP12E — TSG3n Bit Extended Compare Registers 1 to 12**.

Access: This register can be read/written in 32-bit units.

Address: <TSG3n_base> + 044_H

Value after reset: $0000\ 0000_H$

Bit	31	30	29	28	27	26	25	24	23	22	21	20	19	18	17	16
	TSG3nCMP6 (16-bit compare register)															
Value after reset	0	0	0	0	0	0	0	0	0	0	0	0	0	0	0	0
R/W	R/W	R/W	R/W	R/W	R/W	R/W	R/W	R/W	R/W	R/W	R/W	R/W	R/W	R/W	R/W	R/W

Bit	15	14	13	12	11	10	9	8	7	6	5	4	3	2	1	0
	TSG3nCMP5 (16-bit compare register)															
Value after reset	0	0	0	0	0	0	0	0	0	0	0	0	0	0	0	0
R/W	R/W	R/W	R/W	R/W	R/W	R/W	R/W	R/W	R/W	R/W	R/W	R/W	R/W	R/W	R/W	R/W

25.3.33 TSG3nCMP7W — TSG3n Compare Registers 7, 8

This register can access the 16 lower-order bits of the 18-bit register TSG3nCMP7E and TSG3nCMP8E.

For the operation of this register, see **Section 25.3.37, TSG3nCMP1E to TSG3nCMP12E — TSG3n Bit Extended Compare Registers 1 to 12**.

Access: This register can be read/written in 32-bit units.

Address: <TSG3n_base> + 050_H

Value after reset: $0000\ 0000_H$

Bit	31	30	29	28	27	26	25	24	23	22	21	20	19	18	17	16
	TSG3nCMP8 (16-bit compare register)															
Value after reset	0	0	0	0	0	0	0	0	0	0	0	0	0	0	0	0
R/W	R/W	R/W	R/W	R/W	R/W	R/W	R/W	R/W	R/W	R/W	R/W	R/W	R/W	R/W	R/W	R/W

Bit	15	14	13	12	11	10	9	8	7	6	5	4	3	2	1	0
	TSG3nCMP7 (16-bit compare register)															
Value after reset	0	0	0	0	0	0	0	0	0	0	0	0	0	0	0	0
R/W	R/W	R/W	R/W	R/W	R/W	R/W	R/W	R/W	R/W	R/W	R/W	R/W	R/W	R/W	R/W	R/W

25.3.34 TSG3nCMP9W — TSG3n Compare Registers 9, 10

This register can access the 16 lower-order bits of the 18-bit register TSG3nCMP9E and TSG3nCMP10E.

For the operation of this register, see **Section 25.3.37, TSG3nCMP1E to TSG3nCMP12E — TSG3n Bit Extended Compare Registers 1 to 12**.

Access: This register can be read/written in 32-bit units.

Address: <TSG3n_base> + 048_H

Value after reset: $0000\ 0000_H$

Bit	31	30	29	28	27	26	25	24	23	22	21	20	19	18	17	16
	TSG3nCMP10 (16-bit compare register)															
Value after reset	0	0	0	0	0	0	0	0	0	0	0	0	0	0	0	0
R/W	R/W	R/W	R/W	R/W	R/W	R/W	R/W	R/W	R/W	R/W	R/W	R/W	R/W	R/W	R/W	R/W

Bit	15	14	13	12	11	10	9	8	7	6	5	4	3	2	1	0
	TSG3nCMP9 (16-bit compare register)															
Value after reset	0	0	0	0	0	0	0	0	0	0	0	0	0	0	0	0
R/W	R/W	R/W	R/W	R/W	R/W	R/W	R/W	R/W	R/W	R/W	R/W	R/W	R/W	R/W	R/W	R/W

25.3.35 TSG3nCMP11W — TSG3n Compare Registers 11, 12

This register can access the 16 lower-order bits of the 18-bit register TSG3nCMP11E and TSG3nCMP12E.

For the operation of this register, see **Section 25.3.37, TSG3nCMP1E to TSG3nCMP12E — TSG3n Bit Extended Compare Registers 1 to 12**.

Access: This register can be read/written in 32-bit units.

Address: <TSG3n_base> + 054_H

Value after reset: $0000\ 0000_H$

Bit	31	30	29	28	27	26	25	24	23	22	21	20	19	18	17	16
	TSG3nCMP12 (16-bit compare register)															
Value after reset	0	0	0	0	0	0	0	0	0	0	0	0	0	0	0	0
R/W	R/W	R/W	R/W	R/W	R/W	R/W	R/W	R/W	R/W	R/W	R/W	R/W	R/W	R/W	R/W	R/W

Bit	15	14	13	12	11	10	9	8	7	6	5	4	3	2	1	0
	TSG3nCMP11 (16-bit compare register)															
Value after reset	0	0	0	0	0	0	0	0	0	0	0	0	0	0	0	0
R/W	R/W	R/W	R/W	R/W	R/W	R/W	R/W	R/W	R/W	R/W	R/W	R/W	R/W	R/W	R/W	R/W

25.3.36 TSG3nCMP1 to TSG3nCMP12 — TSG3n Compare Registers 1 to 12

These registers can access the 16 lower-order bits of the 18-bit registers TSG3nCMP1E-12E.

For the operation of these registers, see **Section 25.3.37, TSG3nCMP1E to TSG3nCMP12E — TSG3n Bit Extended Compare Registers 1 to 12**.

Access: This register can be read/written in 16-bit units.

Address:
TSG3nCMP1 <TSG3n_base> + 080_H
TSG3nCMP2 <TSG3n_base> + 084_H
TSG3nCMP3 <TSG3n_base> + 098_H
TSG3nCMP4 <TSG3n_base> + $09C_H$
TSG3nCMP5 <TSG3n_base> + 088_H
TSG3nCMP6 <TSG3n_base> + $08C_H$
TSG3nCMP7 <TSG3n_base> + $0A0_H$
TSG3nCMP8 <TSG3n_base> + $0A4_H$
TSG3nCMP9 <TSG3n_base> + 090_H
TSG3nCMP10 <TSG3n_base> + 094_H
TSG3nCMP11 <TSG3n_base> + $0A8_H$
TSG3nCMP12 <TSG3n_base> + $0AC_H$

Value after reset: 0000_H

Bit	15	14	13	12	11	10	9	8	7	6	5	4	3	2	1	0
	16-bit compare register															
Value after reset	0	0	0	0	0	0	0	0	0	0	0	0	0	0	0	0
R/W	R/W	R/W	R/W	R/W	R/W	R/W	R/W	R/W	R/W	R/W	R/W	R/W	R/W	R/W	R/W	R/W

25.3.37 TSG3nCMP1E to TSG3nCMP12E — TSG3n Bit Extended Compare Registers 1 to 12

The compare value is set by these registers. These registers mirror the contents of TSG3nCMP1-12, TSG3nCMP1W, 3W, 5W, 7W, 9W, and 11W from which the 16 lower-order bits of these registers can be accessed.

Access: This register can be read/written in 32-bit units.

Address:
TSG3nCMP1E <TSG3n_base> + $17C_H$
TSG3nCMP2E <TSG3n_base> + 178_H
TSG3nCMP3E <TSG3n_base> + 164_H
TSG3nCMP4E <TSG3n_base> + 160_H
TSG3nCMP5E <TSG3n_base> + 174_H
TSG3nCMP6E <TSG3n_base> + 170_H
TSG3nCMP7E <TSG3n_base> + $15C_H$
TSG3nCMP8E <TSG3n_base> + 158_H
TSG3nCMP9E <TSG3n_base> + $16C_H$
TSG3nCMP10E <TSG3n_base> + 168_H
TSG3nCMP11E <TSG3n_base> + 154_H
TSG3nCMP12E <TSG3n_base> + 150_H

Value after reset: $0000\ 0000_H$

Bit	31	30	29	28	27	26	25	24	23	22	21	20	19	18	17	16
	—	—	—	—	—	—	—	—	—	—	—	—	—	—	TSG3nCMP1E - TSG3nCMP12E (18-bit compare register)	
Value after reset	0	0	0	0	0	0	0	0	0	0	0	0	0	0	0	0
R/W	R	R	R	R	R	R	R	R	R	R	R	R	R	R	R/W	R/W

Bit	15	14	13	12	11	10	9	8	7	6	5	4	3	2	1	0
	TSG3nCMP1E - TSG3nCMP12E (18-bit compare register)															
Value after reset	0	0	0	0	0	0	0	0	0	0	0	0	0	0	0	0
R/W	R/W	R/W	R/W	R/W	R/W	R/W	R/W	R/W	R/W	R/W	R/W	R/W	R/W	R/W	R/W	R/W

Table 25.34 TSG3nCMP1E-TSG3nCMP12E Register Setting (1/2)

register	PWM Mode	HT-PWM Mode SP-PWM Mode	120-DC Mode	HSP-PWM Mode
TSG3nCMP1E	TSG3nO1 clear timing	TSG3nO1 clear timing /TSG3nO2 set timing	Duty when TSG3nO1, 3, or 5 output pattern is selected by TSG3nPAT0.	TSG3nO1 clear timing
TSG3nCMP2E	TSG3nO1 set timing	TSG3nO1 set timing/TSG3nO2 clear timing		TSG3nO1 set timing
TSG3nCMP3E	TSG3nO2 clear timing	—	Duty whenTSG3nO2, 4, or 6 output pattern is selected by TSG3nPAT1.	TSG3nO2 clear timing
TSG3nCMP4E	TSG3nO2 set timing	—		TSG3nO2 set timing
TSG3nCMP5E	TSG3nO3 clear timing	TSG3nO3 clear timing/ TSG3nO4 set timing	Duty when TSG3nO1, 3, or 5 output pattern is selected by TSG3nPAT0.	TSG3nO3 clear timing
TSG3nCMP6E	TSG3nO3 set timing	TSG3nO3 set timing/TSG3nO4 clear timing		TSG3nO3 set timing
TSG3nCMP7E	TSG3nO4 clear timing	—	Duty when TSG3nO2, 4, or 6 output pattern is selected by TSG3nPAT1.	TSG3nO4 clear timing
TSG3nCMP8E	TSG3nO4 set timing	—		TSG3nO4 set timing
TSG3nCMP9E	TSG3nO5 clear timing	TSG3nO5 clear timing/ TSG3nO6 set timing	Duty when TSG3nO1, 3, or 5 output pattern is selected by TSG3nPAT0.	TSG3nO5 clear timing
TSG3nCMP10E	TSG3nO5 set timing	TSG3nO5 set timing/TSG3nO6 clear timing		TSG3nO5 set timing

Table 25.34 TSG3nCMP1E-TSG3nCMP12E Register Setting (2/2)

register	PWM Mode	HT-PWM Mode	SP-PWM Mode	120-DC Mode	HSP-PWM Mode
TSG3nCMP11E	TSG3nO6 clear timing	—		Duty when TSG3nO2, 4, or 6 output pattern is selected by TSG3nPAT1.	TSG3nO6 clear timing
TSG3nCMP12E	TSG3nO6 set timing	—			TSG3nO6 set timing

NOTE

The dead time function is used in all operating modes.

In HT-PWM mode, the compare match signal is generated when comparison detects matches of the value in the given register with TSG3nCNTE or TSG3nSBCE.

In 120-DC mode, the output from TSG3nO1-6 is controlled by the TSG3nCMPmE, TSG3nPAT0, and TSG3nPAT1 registers.

25.3.38 TSG3nDCMP0W — TSG3n Diagnostic Output Compare Register 0, 1

This register can access the 16 lower-order bits of the 18-bit register TSG3nDCMP0E and TSG3nDCMP1E.

For the operation of this register, see **Section 25.3.40, TSG3nDCMP0E to 2E — TSG3n Bit Extended Diagnostic Output Compare Register 0 to 2**.

Access: This register can be read/written in 32-bit units.

Address: <TSG3n_base> + $05C_H$

Value after reset: $0000\ 0000_H$

Bit	31	30	29	28	27	26	25	24	23	22	21	20	19	18	17	16
	TSG3nDCMP1(16-bit compare register)															
Value after reset	0	0	0	0	0	0	0	0	0	0	0	0	0	0	0	0
R/W	R/W	R/W	R/W	R/W	R/W	R/W	R/W	R/W	R/W	R/W	R/W	R/W	R/W	R/W	R/W	R/W

Bit	15	14	13	12	11	10	9	8	7	6	5	4	3	2	1	0
	TSG3nDCMP0(16-bit compare register)															
Value after reset	0	0	0	0	0	0	0	0	0	0	0	0	0	0	0	0
R/W	R/W	R/W	R/W	R/W	R/W	R/W	R/W	R/W	R/W	R/W	R/W	R/W	R/W	R/W	R/W	R/W

25.3.39 TSG3nDCMP2 — TSG3n Diagnostic Output Compare Register 2

This register can access the 16 lower-order bits of the 18-bit register TSG3nDCMP2E.

For the operation of this register, see **Section 25.3.40, TSG3nDCMP0E to 2E — TSG3n Bit Extended Diagnostic Output Compare Register 0 to 2**.

Access: This register can be read/written in 32-bit units.

Address: <TSG3n_base> + 060_H

Value after reset: $0000\ 0000_H$

Bit	31	30	29	28	27	26	25	24	23	22	21	20	19	18	17	16
	—	—	—	—	—	—	—	—	—	—	—	—	—	—	—	—
Value after reset	0	0	0	0	0	0	0	0	0	0	0	0	0	0	0	0
R/W	R	R	R	R	R	R	R	R	R	R	R	R	R	R	R	R

Bit	15	14	13	12	11	10	9	8	7	6	5	4	3	2	1	0
	TSG3nDCMP2 (16-bit compare register)															
Value after reset	0	0	0	0	0	0	0	0	0	0	0	0	0	0	0	0
R/W	R/W	R/W	R/W	R/W	R/W	R/W	R/W	R/W	R/W	R/W	R/W	R/W	R/W	R/W	R/W	R/W

25.3.40 TSG3nDCMP0E to 2E — TSG3n Bit Extended Diagnostic Output Compare Register 0 to 2

The compare value is set by these registers. These registers mirror the contents of TSG3nDCMP0W and TSG3nDCMP2 from which the 16 lower-order bits of these registers can be accessed.

Access: This register can be read/written in 32-bit units.

Address: TSG3nDCMP0E <TSG3n_base> + 148_H
TSG3nDCMP1E <TSG3n_base> + 144_H
TSG3nDCMP2E <TSG3n_base> + 140_H

Value after reset: $0000\ 0000_H$

Bit	31	30	29	28	27	26	25	24	23	22	21	20	19	18	17	16
	—	—	—	—	—	—	—	—	—	—	—	—	—	—	TSG3nDCMP0E - TSG3nDCMP2E (18-bit compare register)	
Value after reset	0	0	0	0	0	0	0	0	0	0	0	0	0	0	0	0
R/W	R	R	R	R	R	R	R	R	R	R	R	R	R	R	R/W	R/W

Bit	15	14	13	12	11	10	9	8	7	6	5	4	3	2	1	0
	TSG3nDCMP0E - TSG3nDCMP2E (18-bit compare register)															
Value after reset	0	0	0	0	0	0	0	0	0	0	0	0	0	0	0	0
R/W	R/W	R/W	R/W	R/W	R/W	R/W	R/W	R/W	R/W	R/W	R/W	R/W	R/W	R/W	R/W	R/W

These registers control the diagnostic output timing or AD conversion trigger timing in all modes. A pulse is generated at the match timing of the 18-bit counter value with this register.

25.3.41 TSG3nPAT0W — TSG3n Pattern Register 0

This register specifies the output pattern.

Access: This register can be read/written in 32-bit units.

Address: <TSG3n_base> + 064_H

Value after reset: $0000\ 0000_H$

Bit	31	30	29	28	27	26	25	24	23	22	21	20	19	18	17	16
	—	—	—	—	—	—	—	—	—	—	—	—	—	—	PAT5T	
Value after reset	0	0	0	0	0	0	0	0	0	0	0	0	0	0	0	0
R/W	R	R	R	R	R	R	R	R	R	R	R	R	R	R	R/W	R/W

Bit	15	14	13	12	11	10	9	8	7	6	5	4	3	2	1	0
	PAT5T	PAT4T			PAT3T			PAT2T			PAT1T			PAT0T		
Value after reset	0	0	0	0	0	0	0	0	0	0	0	0	0	0	0	0
R/W	R/W	R/W	R/W	R/W	R/W	R/W	R/W	R/W	R/W	R/W	R/W	R/W	R/W	R/W	R/W	R/W

Output Pattern

This register controls UT/VT/WT output in 120-DC mode.

Table 25.35 TSG3nPAT0W Register Setting value and Output Control

PATmT Value	Output Control
000	Fixed Low level
001	PWM output set by TSG3nCMP1E
010	PWM output set by TSG3nCMP2E
011	PWM output set by TSG3nCMP5E
100	PWM output set by TSG3nCMP6E
101	PWM output set by TSG3nCMP9E
110	PWM output set by TSG3nCMP10E
111	Fixed High level

Note: m = 0, 1, 2, 3, 4, 5

25.3.42 TSG3nPAT1W — TSG3n Pattern Register 1

This register specifies the output pattern.

Access: This register can be read/written in 32-bit units.

Address: <TSG3n_base> + 068_H

Value after reset: $0000\ 0000_H$

Bit	31	30	29	28	27	26	25	24	23	22	21	20	19	18	17	16
	—	—	—	—	—	—	—	—	—	—	—	—	—	—	PAT5B	
Value after reset	0	0	0	0	0	0	0	0	0	0	0	0	0	0	0	0
R/W	R	R	R	R	R	R	R	R	R	R	R	R	R	R	R/W	R/W

Bit	15	14	13	12	11	10	9	8	7	6	5	4	3	2	1	0
	PAT5B	PAT4B			PAT3B			PAT2B			PAT1B			PAT0B		
Value after reset	0	0	0	0	0	0	0	0	0	0	0	0	0	0	0	0
R/W	R/W	R/W	R/W	R/W	R/W	R/W	R/W	R/W	R/W	R/W	R/W	R/W	R/W	R/W	R/W	R/W

Output Pattern

This register controls UB/VB/WB output in 120-DC mode.

Table 25.36 TSG3nPAT1W Register Setting value and Output Control

PATmB Value	Output Control
000	Fixed Low level
001	PWM output set by TSG3nCMP3E
010	PWM output set by TSG3nCMP4E
011	PWM output set by TSG3nCMP7E
100	PWM output set by TSG3nCMP8E
101	PWM output set by TSG3nCMP11E
110	PWM output set by TSG3nCMP12E
111	Fixed High level

Note: m = 0, 1, 2, 3, 4, 5

25.3.43 TSG3nDTC0W — TSG3n Dead Time Setting Register 0

This register sets the dead time value (the period from inverse phase inactivation to positive phase activation).

Access: This register can be read/written in 32-bit units.

Address: <TSG3n_base> + $06C_H$

Value after reset: $0000\ 0000_H$

Bit	31	30	29	28	27	26	25	24	23	22	21	20	19	18	17	16
	—	Write Protection Code Check														
Value after reset	0	0	0	0	0	0	0	0	0	0	0	0	0	0	0	0
R/W	R	W	W	W	W	W	W	W	W	W	W	W	W	W	W	W

Bit	15	14	13	12	11	10	9	8	7	6	5	4	3	2	1	0
	—	—	—	—	—	—	TSG3nDTC0(10-bit dead time compare)									
Value after reset	0	0	0	0	0	0	0	0	0	0	0	0	0	0	0	0
R/W	R	R	R	R	R	R	R/W	R/W	R/W	R/W	R/W	R/W	R/W	R/W	R/W	R/W

To rewrite TSG3nDTC0W[0:9], set bit 14 to bit 0 and TSG3nDTCM to 0 in TSG3nDTPR, and rewrite the TSG3nDTC0W. At this time, when the rewritten value of TSG3nDTC0W[30:16] and the TSG3nDTPR value match, TSG3nDTC0W is rewritten.

During timer operation (TSG3nSTR0.TSG3nTE = 1), rewriting should be performed in reload mode (TSG3nCTL3.TSG3nRMC = 0).

25.3.44 TSG3nDTC1W — TSG3n Dead Time Setting Register 1

This register sets the dead time (the period from positive phase inactivation to inverse phase activation).

Access: This register can be read/written in 32-bit units.

Address: <TSG3n_base> + 070_H

Value after reset: $0000\ 0000_H$

Bit	31	30	29	28	27	26	25	24	23	22	21	20	19	18	17	16
	—	Write Protection Code Check														
Value after reset	0	0	0	0	0	0	0	0	0	0	0	0	0	0	0	0
R/W	R	W	W	W	W	W	W	W	W	W	W	W	W	W	W	W

Bit	15	14	13	12	11	10	9	8	7	6	5	4	3	2	1	0
	—	—	—	—	—	—	TSG3nDTC1(10-bit dead time compare)									
Value after reset	0	0	0	0	0	0	0	0	0	0	0	0	0	0	0	0
R/W	R	R	R	R	R	R	R/W	R/W	R/W	R/W	R/W	R/W	R/W	R/W	R/W	R/W

To rewrite TSG3nDTC1W[0:9], set bit 14 to bit 0 and TSG3nDTCM to 0 in TSG3nDTPR, and rewrite the TSG3nDTC1W. At this time, when the rewritten value of TSG3nDTC1W[30:16] and the TSG3nDTPR value match, TSG3nDTC1W is rewritten.

During timer operation (TSG3nSTR0.TSG3nTE = 1), rewriting should be performed in reload mode (TSG3nCTL3.TSG3nRMC = 0).

25.3.45 TSG3nCMPU — TSG3n HT-PWM U Phase Compare Register

This register can access the 16 lower-order bits of the 18-bit register TSG3nCMPUE.

For the operation of this register, see **Section 25.3.48, TSG3nCMPUE — TSG3n Bit Extended U Phase Compare Register**.

Access: This register can be read/written in 16-bit units.

Address: <TSG3n_base> + $0B0_H$

Value after reset: 0000_H

Bit	15	14	13	12	11	10	9	8	7	6	5	4	3	2	1	0
	TSG3nCMPU(16-bit compare register)															
Value after reset	0	0	0	0	0	0	0	0	0	0	0	0	0	0	0	0
R/W	R/W	R/W	R/W	R/W	R/W	R/W	R/W	R/W	R/W	R/W	R/W	R/W	R/W	R/W	R/W	R/W

25.3.46 TSG3nCMPV — TSG3n HT-PWM V Phase Compare Register

This register can access the 16 lower-order bits of the 18-bit register TSG3nCMPVE.

For the operation of this register, see **Section 25.3.49, TSG3nCMPVE — TSG3n Bit Extended V Phase Compare Register**.

Access: This register can be read/written in 16-bit units.

Address: <TSG3n_base> + $0B4_H$

Value after reset: 0000_H

Bit	15	14	13	12	11	10	9	8	7	6	5	4	3	2	1	0
	TSG3nCMPV (16-bit compare register)															
Value after reset	0	0	0	0	0	0	0	0	0	0	0	0	0	0	0	0
R/W	R/W	R/W	R/W	R/W	R/W	R/W	R/W	R/W	R/W	R/W	R/W	R/W	R/W	R/W	R/W	R/W

25.3.47 TSG3nCMPW — TSG3n HT-PWM W Phase Compare Register

This register can access the 16 lower-order bits of the 18-bit register TSG3nCMPWE.

For the operation of this register, see **Section 25.3.50, TSG3nCMPWE — TSG3n Bit Extended W Phase Compare Register**.

Access: This register can be read/written in 16-bit units.

Address: <TSG3n_base> + $0B8_H$

Value after reset: 0000_H

Bit	15	14	13	12	11	10	9	8	7	6	5	4	3	2	1	0
	TSG3nCMPW (16-bit compare register)															
Value after reset	0	0	0	0	0	0	0	0	0	0	0	0	0	0	0	0
R/W	R/W	R/W	R/W	R/W	R/W	R/W	R/W	R/W	R/W	R/W	R/W	R/W	R/W	R/W	R/W	R/W

25.3.48 TSG3nCMPUE — TSG3n Bit Extended U Phase Compare Register

This register sets the compare value for U phase in HT-PWM. In addition to the functions of TSG3nCMP1E and TSG3nCMP2E, this register can access specific registers.

The data written to this register is stored in the TSG3nCMP1E and TSG3nCMP2E registers which allows a generation of symmetry triangular waveform of PWM by one write access (see **Figure 25.2**). When this register is read, the same value as TSG3nCMP1E is returned. This register mirrors the contents of TSG3nCMPU from which the 16 lower-order bits of this register can be accessed.

Access: This register can be read/written in 32-bit units.

Address: <TSG3n_base> +188_H

Value after reset: $0000\ 0000_H$

Bit	31	30	29	28	27	26	25	24	23	22	21	20	19	18	17	16
	—	—	—	—	—	—	—	—	—	—	—	—	—	—	TSG3nCMPUE (18-bit compare register)	
Value after reset	0	0	0	0	0	0	0	0	0	0	0	0	0	0	0	0
R/W	R	R	R	R	R	R	R	R	R	R	R	R	R	R	R/W	R/W

Bit	15	14	13	12	11	10	9	8	7	6	5	4	3	2	1	0
	TSG3nCMPUE (18-bit compare register)															
Value after reset	0	0	0	0	0	0	0	0	0	0	0	0	0	0	0	0
R/W	R/W	R/W	R/W	R/W	R/W	R/W	R/W	R/W	R/W	R/W	R/W	R/W	R/W	R/W	R/W	R/W

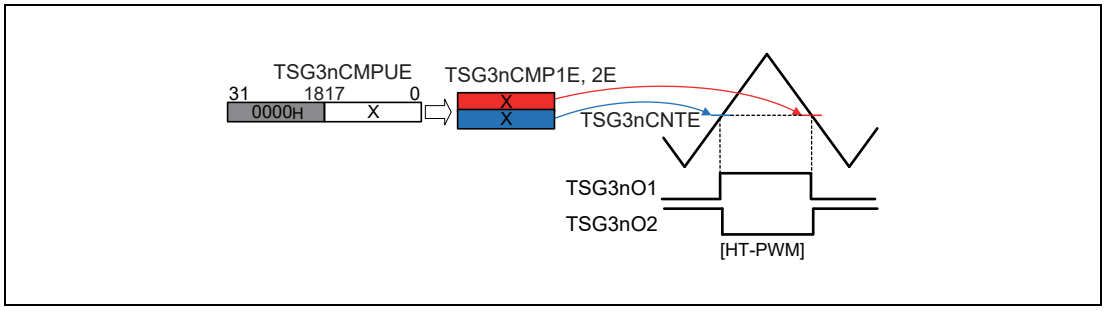

Figure 25.2 TSG3nCMPUE Register Accesses

25.3.49 TSG3nCMPVE — TSG3n Bit Extended V Phase Compare Register

This register sets the compare value for V phase in HT-PWM. In addition to the functions of TSG3nCMP5E and TSG3nCMP6E, this register can access specific registers.

The data written to this register is stored in the TSG3nCMP5E and TSG3nCMP6E registers which allows a generation of symmetry triangular waveform of PWM by one write access (see **Figure 25.3**). When this register is read, the same value as TSG3nCMP5E is returned. This register mirrors the contents of TSG3nCMPV from which the 16 lower-order bits of this register can be accessed.

Access: This register can be read/written in 32-bit units.

Address: <TSG3n_base> +184_H

Value after reset: 0000 0000_H

Bit	31	30	29	28	27	26	25	24	23	22	21	20	19	18	17	16
	—	—	—	—	—	—	—	—	—	—	—	—	—	—	TSG3nCMPVE (18-bit compare register)	
Value after reset	0	0	0	0	0	0	0	0	0	0	0	0	0	0	0	0
R/W	R	R	R	R	R	R	R	R	R	R	R	R	R	R	R/W	R/W

Bit	15	14	13	12	11	10	9	8	7	6	5	4	3	2	1	0
	TSG3nCMPVE (18-bit compare register)															
Value after reset	0	0	0	0	0	0	0	0	0	0	0	0	0	0	0	0
R/W	R/W	R/W	R/W	R/W	R/W	R/W	R/W	R/W	R/W	R/W	R/W	R/W	R/W	R/W	R/W	R/W

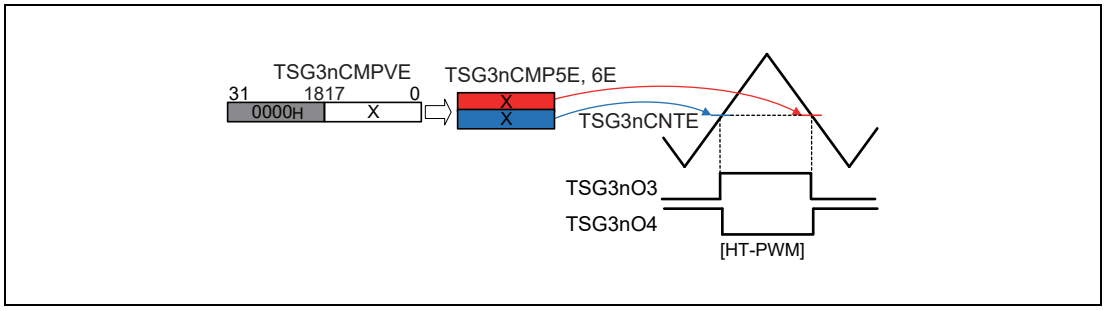

Figure 25.3 TSG3nCMPVE Register Accesses

25.3.50 TSG3nCMPWE — TSG3n Bit Extended W Phase Compare Register

This register sets the compare value for W phase in HT-PWM. In addition to the functions of TSG3nCMP9E and TSG3nCMP10E, this register can access specific registers.

The data written to this register is stored in the TSG3nCMP9E and TSG3nCMP10E registers which allows a generation of symmetry triangular waveform of PWM by one write access (see **Figure 25.4**). When this register is read, the same value as TSG3nCMP9E is returned. This register mirrors the contents of TSG3nCMPW from which the 16 lower-order bits of this register can be accessed.

Access: This register can be read/written in 32-bit units.

Address: <TSG3n_base> +180_H

Value after reset: $0000\ 0000_H$

Bit	31	30	29	28	27	26	25	24	23	22	21	20	19	18	17	16
	—	—	—	—	—	—	—	—	—	—	—	—	—	—	TSG3nCMPWE (18-bit compare register)	
Value after reset	0	0	0	0	0	0	0	0	0	0	0	0	0	0	0	0
R/W	R	R	R	R	R	R	R	R	R	R	R	R	R	R	R/W	R/W

Bit	15	14	13	12	11	10	9	8	7	6	5	4	3	2	1	0
	TSG3nCMPWE (18-bit compare register)															
Value after reset	0	0	0	0	0	0	0	0	0	0	0	0	0	0	0	0
R/W	R/W	R/W	R/W	R/W	R/W	R/W	R/W	R/W	R/W	R/W	R/W	R/W	R/W	R/W	R/W	R/W

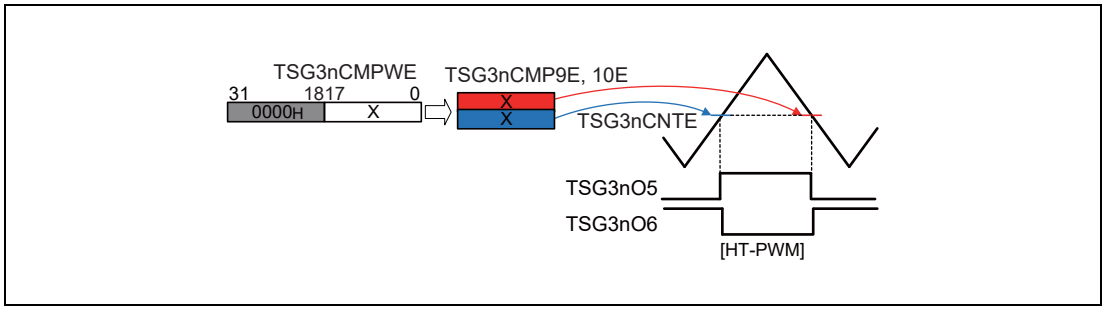

Figure 25.4 TSG3nCMPWE Register Accesses

25.3.51 TSG3nUPW — TSG3n SP-PWM U Phase Active Width Register

This register can access the 16 lower-order bits of the 18-bit register TSG3nUPWE.

For the operation of this register, see **Section 25.3.54, TSG3nUPWE — TSG3n Bit Extended U Phase Active Width Register**.

Access: This register can be read/written in 16-bit units.

Address: <TSG3n_base> + $0BC_H$

Value after reset: 0000_H

Bit	15	14	13	12	11	10	9	8	7	6	5	4	3	2	1	0
	TSG3nUPW (16-bit compare register)															
Value after reset	0	0	0	0	0	0	0	0	0	0	0	0	0	0	0	0
R/W	R/W	R/W	R/W	R/W	R/W	R/W	R/W	R/W	R/W	R/W	R/W	R/W	R/W	R/W	R/W	R/W

25.3.52 TSG3nVPW — TSG3n SP-PWM V Phase Active Width Register

This register can access the 16 lower-order bits of the 18-bit register TSG3nVPWE.

For the operation of this register, see **Section 25.3.55, TSG3nVPWE — TSG3n Bit Extended V Phase Active Width Register**.

Access: This register can be read/written in 16-bit units.

Address: <TSG3n_base> + $0C0_H$

Value after reset: 0000_H

Bit	15	14	13	12	11	10	9	8	7	6	5	4	3	2	1	0
	TSG3nVPW (16-bit compare register)															
Value after reset	0	0	0	0	0	0	0	0	0	0	0	0	0	0	0	0
R/W	R/W	R/W	R/W	R/W	R/W	R/W	R/W	R/W	R/W	R/W	R/W	R/W	R/W	R/W	R/W	R/W

25.3.53 TSG3nWPW — TSG3n SP-PWM W Phase Active Width Register

This register can access the 16 lower-order bits of the 18-bit register TSG3nWPWE.

For the operation of this register, see **Section 25.3.56, TSG3nWPWE — TSG3n Bit Extended W Phase Active Width Register**.

Access: This register can be read/written in 16-bit units.

Address: <TSG3n_base> + $0C4_H$

Value after reset: 0000_H

Bit	15	14	13	12	11	10	9	8	7	6	5	4	3	2	1	0
	TSG3nWPW (16-bit compare register)															
Value after reset	0	0	0	0	0	0	0	0	0	0	0	0	0	0	0	0
R/W	R/W	R/W	R/W	R/W	R/W	R/W	R/W	R/W	R/W	R/W	R/W	R/W	R/W	R/W	R/W	R/W

25.3.54 TSG3nUPWE — TSG3n Bit Extended U Phase Active Width Register

This register sets the active width for U phase in SP-PWM mode. The sum of the TSG3nUPWE value and the TSG3nCMP2E value is stored in TSG3nCMP1E (see **Figure 25.5**). When this register is read, the same value as TSG3nCMP1E is returned. This register mirrors the contents of TSG3nUPW from which the 16 lower-order bits of this register can be accessed.

Access: This register can be read/written in 32-bit units.

Address: <TSG3n_base> + 198_H

Value after reset: $0000\ 0000_H$

Bit	31	30	29	28	27	26	25	24	23	22	21	20	19	18	17	16
	—	—	—	—	—	—	—	—	—	—	—	—	—	—	TSG3nUPWE (18-bit compare register)	
Value after reset	0	0	0	0	0	0	0	0	0	0	0	0	0	0	0	0
R/W	R	R	R	R	R	R	R	R	R	R	R	R	R	R	R/W	R/W

Bit	15	14	13	12	11	10	9	8	7	6	5	4	3	2	1	0
	TSG3nUPWE (18-bit compare register)															
Value after reset	0	0	0	0	0	0	0	0	0	0	0	0	0	0	0	0
R/W	R/W	R/W	R/W	R/W	R/W	R/W	R/W	R/W	R/W	R/W	R/W	R/W	R/W	R/W	R/W	R/W

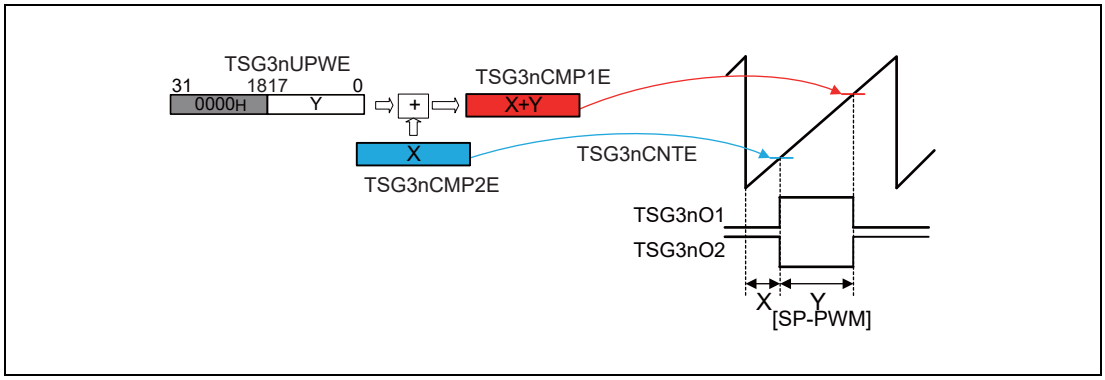

Figure 25.5 TSG3nUPWE Register Accesses

25.3.55 TSG3nVPWE — TSG3n Bit Extended V Phase Active Width Register

This register sets the active width for V phase in SP-PWM mode. The sum of the TSG3nVPWE value and the TSG3nCMP6E value is stored in TSG3nCMP5E (see **Figure 25.6**). When this register is read, the same value as TSG3nCMP5E is returned. This register mirrors the contents of TSG3nVPW from which the 16 lower-order bits of this register can be accessed.

Access: This register can be read/written in 32-bit units.

Address: <TSG3n_base> + 194_H

Value after reset: $0000\ 0000_H$

Bit	31	30	29	28	27	26	25	24	23	22	21	20	19	18	17	16
	—	—	—	—	—	—	—	—	—	—	—	—	—	—	TSG3nVPWE (18-bit compare register)	
Value after reset	0	0	0	0	0	0	0	0	0	0	0	0	0	0	0	0
R/W	R	R	R	R	R	R	R	R	R	R	R	R	R	R	R/W	R/W

Bit	15	14	13	12	11	10	9	8	7	6	5	4	3	2	1	0
	TSG3nVPWE (18-bit compare register)															
Value after reset	0	0	0	0	0	0	0	0	0	0	0	0	0	0	0	0
R/W	R/W	R/W	R/W	R/W	R/W	R/W	R/W	R/W	R/W	R/W	R/W	R/W	R/W	R/W	R/W	R/W

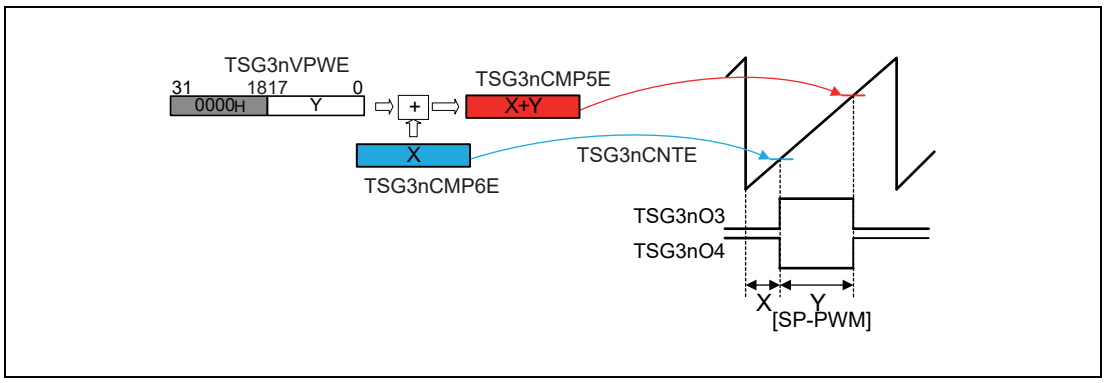

Figure 25.6 TSG3nVPWE Register Accesses

25.3.56 TSG3nWPWE — TSG3n Bit Extended W Phase Active Width Register

This register sets the active width for W phase in SP-PWM mode. The sum of the TSG3nWPWE value and the TSG3nCMP10E value is stored in TSG3nCMP9E (see **Figure 25.7**). When this register is read, the same value as TSG3nCMP9E is returned. This register mirrors the contents of TSG3nWPW from which the 16 lower-order bits of this register can be accessed.

Access: This register can be read/written in 32-bit units.

Address: <TSG3n_base> + 190_H

Value after reset: $0000\ 0000_H$

Bit	31	30	29	28	27	26	25	24	23	22	21	20	19	18	17	16
	—	—	—	—	—	—	—	—	—	—	—	—	—	—	TSG3nWPWE (18-bit compare register)	
Value after reset	0	0	0	0	0	0	0	0	0	0	0	0	0	0	0	0
R/W	R	R	R	R	R	R	R	R	R	R	R	R	R	R	R/W	R/W

Bit	15	14	13	12	11	10	9	8	7	6	5	4	3	2	1	0
	TSG3nWPWE (18-bit compare register)															
Value after reset	0	0	0	0	0	0	0	0	0	0	0	0	0	0	0	0
R/W	R/W	R/W	R/W	R/W	R/W	R/W	R/W	R/W	R/W	R/W	R/W	R/W	R/W	R/W	R/W	R/W

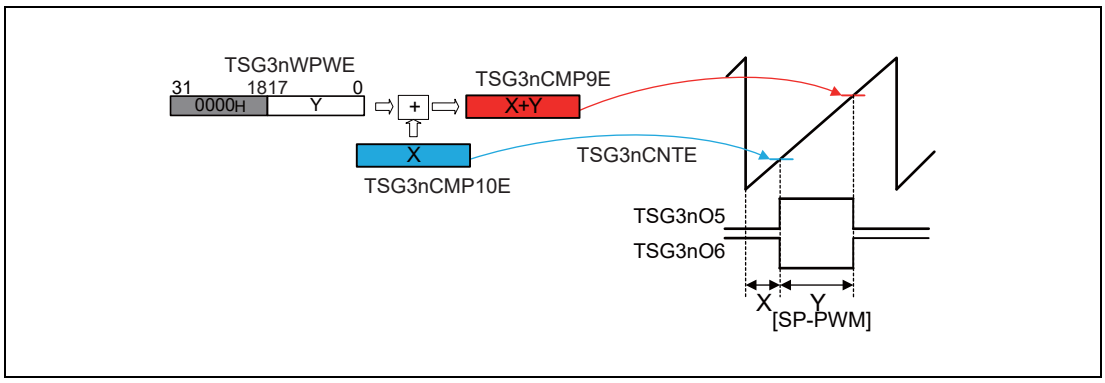

Figure 25.7 TSG3nWPWE Register Accesses

25.3.57 TSG3nHSPCMUE — TSG3n HSP-PWM Mode U Phase Compare Register

This register sets the PWM output width for U phase in HSP-PWM mode.

When a write access is made to this register, the values are set to TSG3nCMP1E to TSG3nCMP4E registers according to the formulas described in **Section 25.4.7.6, Compare Register Set Value in HSP-PWM Mode**.

When this register is read, the same value as TSG3nCMP1E is returned.

Access: This register can be read/written in 32-bit units.

Address: <TSG3n_base> + 134_H

Value after reset: $0000\ 0000_H$

Bit	31	30	29	28	27	26	25	24	23	22	21	20	19	18	17	16
	—	—	—	—	—	—	—	—	—	—	—	—	—	—	TSG3nHSPCMUE (18-bit compare register)	
Value after reset	0	0	0	0	0	0	0	0	0	0	0	0	0	0	0	0
R/W	R	R	R	R	R	R	R	R	R	R	R	R	R	R	R/W	R/W

Bit	15	14	13	12	11	10	9	8	7	6	5	4	3	2	1	0
	TSG3nHSPCMUE (18-bit compare register)															
Value after reset	0	0	0	0	0	0	0	0	0	0	0	0	0	0	0	0
R/W	R/W	R/W	R/W	R/W	R/W	R/W	R/W	R/W	R/W	R/W	R/W	R/W	R/W	R/W	R/W	R/W

25.3.58 TSG3nHSPCMVE — TSG3n HSP-PWM Mode V Phase Compare Register

This register sets the PWM output width for V phase in HSP-PWM mode.

When a write access is made to this register, the values are set to TSG3nCMP5E to TSG3nCMP8E registers according to the formulas described in **Section 25.4.7.6, Compare Register Set Value in HSP-PWM Mode**.

When this register is read, the same value as TSG3nCMP5E is returned.

Access: This register can be read/written in 32-bit units.

Address: <TSG3n_base> + 130_H

Value after reset: $0000\ 0000_H$

Bit	31	30	29	28	27	26	25	24	23	22	21	20	19	18	17	16
	—	—	—	—	—	—	—	—	—	—	—	—	—	—	TSG3nHSPCMVE (18-bit compare register)	
Value after reset	0	0	0	0	0	0	0	0	0	0	0	0	0	0	0	0
R/W	R	R	R	R	R	R	R	R	R	R	R	R	R	R	R/W	R/W

Bit	15	14	13	12	11	10	9	8	7	6	5	4	3	2	1	0
	TSG3nHSPCMVE (18-bit compare register)															
Value after reset	0	0	0	0	0	0	0	0	0	0	0	0	0	0	0	0
R/W	R/W	R/W	R/W	R/W	R/W	R/W	R/W	R/W	R/W	R/W	R/W	R/W	R/W	R/W	R/W	R/W

25.3.59 TSG3nHSPCMWE — TSG3n HSP-PWM Mode W Phase Compare Register

This register sets the PWM output width for W phase in HSP-PWM mode.

When a write access is made to this register, the values are set to TSG3nCMP9E to TSG3nCMP12E registers according to the formulas described in **Section 25.4.7.6, Compare Register Set Value in HSP-PWM Mode**.

When this register is read, the same value as TSG3nCMP9E is returned.

Access: This register can be read/written in 32-bit units.

Address: <TSG3n_base> + $12C_H$

Value after reset: $0000\ 0000_H$

Bit	31	30	29	28	27	26	25	24	23	22	21	20	19	18	17	16
	—	—	—	—	—	—	—	—	—	—	—	—	—	—	TSG3nHSPCMWE (18-bit compare register)	
Value after reset	0	0	0	0	0	0	0	0	0	0	0	0	0	0	0	0
R/W	R	R	R	R	R	R	R	R	R	R	R	R	R	R	R/W	R/W

Bit	15	14	13	12	11	10	9	8	7	6	5	4	3	2	1	0
	TSG3nHSPCMWE (18-bit compare register)															
Value after reset	0	0	0	0	0	0	0	0	0	0	0	0	0	0	0	0
R/W	R/W	R/W	R/W	R/W	R/W	R/W	R/W	R/W	R/W	R/W	R/W	R/W	R/W	R/W	R/W	R/W

25.3.60 TSG3nHSPSHUE — TSG3n HSP-PWM Mode U Phase Shift Register

This register sets the PWM shift width for U phase in HSP-PWM mode.

When a write access is made to TSG3nHSPCMUE after setting this register, the values are set to TSG3nCMP1E to TSG3nCMP4E registers according to the formulas described in **Section 25.4.7.6, Compare Register Set Value in HSP-PWM Mode**.

Access: This register can be read/written in 32-bit units.

Address: <TSG3n_base> + 128_H

Value after reset: $0000\ 0000_H$

Bit	31	30	29	28	27	26	25	24	23	22	21	20	19	18	17	16
	—	—	—	—	—	—	—	—	—	—	—	—	—	—	TSG3nHSPSHUE (18-bit shift register)	
Value after reset	0	0	0	0	0	0	0	0	0	0	0	0	0	0	0	0
R/W	R	R	R	R	R	R	R	R	R	R	R	R	R	R	R/W	R/W

Bit	15	14	13	12	11	10	9	8	7	6	5	4	3	2	1	0
	TSG3nHSPSHUE (18-bit shift register)															
Value after reset	0	0	0	0	0	0	0	0	0	0	0	0	0	0	0	0
R/W	R/W	R/W	R/W	R/W	R/W	R/W	R/W	R/W	R/W	R/W	R/W	R/W	R/W	R/W	R/W	R/W

25.3.61 TSG3nHSPSHVE — TSG3n HSP-PWM Mode V Phase Shift Mode Register

This register sets the PWM shift width for V phase in HSP-PWM mode.

When a write access is made to TSG3nHSPCMVE after setting this register, the values are set to TSG3nCMP5E to TSG3nCMP8E registers according to the formulas described in **Section 25.4.7.6, Compare Register Set Value in HSP-PWM Mode**.

Access: This register can be read/written in 32-bit units.

Address: <TSG3n_base> + 124_H

Value after reset: $0000\ 0000_H$

Bit	31	30	29	28	27	26	25	24	23	22	21	20	19	18	17	16
	—	—	—	—	—	—	—	—	—	—	—	—	—	—	TSG3nHSPSHVE (18-bit shift register)	
Value after reset	0	0	0	0	0	0	0	0	0	0	0	0	0	0	0	0
R/W	R	R	R	R	R	R	R	R	R	R	R	R	R	R	R/W	R/W

Bit	15	14	13	12	11	10	9	8	7	6	5	4	3	2	1	0
	TSG3nHSPSHVE (18-bit shift register)															
Value after reset	0	0	0	0	0	0	0	0	0	0	0	0	0	0	0	0
R/W	R/W	R/W	R/W	R/W	R/W	R/W	R/W	R/W	R/W	R/W	R/W	R/W	R/W	R/W	R/W	R/W

25.3.62 TSG3nHSPSHWE — TSG3n HSP-PWM Mode W Phase Shift Register

This register sets the PWM shift width for U phase in HSP-PWM mode.

When a write access is made to TSG3nHSPCMWE after setting this register, the values are set to TSG3nCMP9E to TSG3nCMP12E registers according to the formulas described in **Section 25.4.7.6, Compare Register Set Value in HSP-PWM Mode**.

Access: This register can be read/written in 32-bit units.

Address: <TSG3n_base> + 120_H

Value after reset: $0000\ 0000_H$

Bit	31	30	29	28	27	26	25	24	23	22	21	20	19	18	17	16
	—	—	—	—	—	—	—	—	—	—	—	—	—	—	TSG3nHSPSHWE (18-bit shift register)	
Value after reset	0	0	0	0	0	0	0	0	0	0	0	0	0	0	0	0
R/W	R	R	R	R	R	R	R	R	R	R	R	R	R	R	R/W	R/W

Bit	15	14	13	12	11	10	9	8	7	6	5	4	3	2	1	0
	TSG3nHSPSHWE (18-bit shift register)															
Value after reset	0	0	0	0	0	0	0	0	0	0	0	0	0	0	0	0
R/W	R/W	R/W	R/W	R/W	R/W	R/W	R/W	R/W	R/W	R/W	R/W	R/W	R/W	R/W	R/W	R/W

25.3.63 TSG3nDTPR — TSG3n Dead Time Protection Register

This register controls protection of the write access to the dead time register.

Access: This register can be read/written in 16-bit units.

Address: <TSG3n_base> + 210_H

Value after reset: $0000\ 0000_H$

Bit	15	14	13	12	11	10	9	8	7	6	5	4	3	2	1	0
	TSG3n DTCM	TSG3nDTPR (Write Protection Code)														
Value after reset	0	0	0	0	0	0	0	0	0	0	0	0	0	0	0	0
R/W	R/W	R/W	R/W	R/W	R/W	R/W	R/W	R/W	R/W	R/W	R/W	R/W	R/W	R/W	R/W	R/W

Table 25.37 TSG3nDTPR Register Contents

Bit Position	Bit Name	Function
15	TSG3nDTCM	Enables or disables rewriting of TSG3nDTC0 and TSG3nDTC1. 0: Enables rewriting of TSG3nDTC0 and TSG3nDTC1. 1: Disables rewriting of TSG3nDTC0 and TSG3nDTC1.
14 to 0	TSG3nDTPR [14:0]	Sets the write protection code (any value from 0000 to 7FFF).

This register protects TSG3nDTC0 and TSG3nDTC1 from illegal rewriting.

Functions are described below.

- TSG3nDTCM enables or disables rewriting of TSG3nDTC0 and TSG3nDTC1.
- Rewriting of TSG3nDTC0 and TSG3nDTC1 is enabled or disabled by checking a match of the write protection code (bits 30 to 16) of TSG3nDTC0 and TSG3nDTC1 with the write protection code of TSG3nDTPR, and the TSG3nDTCM setting.

CAUTION

This register should be set when the timer is stopped (TSG3nSTR0.TSG3nTE = 0). Only the same value can be written during timer operation (TSG3nSTR0.TSG3nTE = 1). If the different value is written to this register when TSG3nSTR0.TSG3nTE = 1, timer operation cannot be guaranteed. If this register is erroneously rewritten, set this register again after stopping the timer.

25.4 Function

Table 25.38 List of Modes

TSG3nCTL0 Register			
TSG3nMD2	TSG3nMD1	TSG3nMD0	Timer Mode
0	0	0	PWM mode
0	0	1	HT-PWM mode (HT-PWM)
0	1	0	Shift pulse PWM mode (SP-PWM)
0	1	1	120-DC mode
1	0	0	High-accuracy shift pulse PWM mode (HSP-PWM)
Other than above			Setting prohibited

25.4.1 Basic Operation

25.4.1.1 Basic Operation of 18-Bit Counter

The basic operation of the 18-bit counter is described. For details, see **Section 25.4.7, Operating Modes**.

Counting start

The 18-bit counter of TSG3n starts counting in HT-PWM mode when the initial value is 00000_H and after the TSG3nDTC0 value is loaded. The counter starts counting from the initial value 00000_H in all modes except for HT-PWM mode.

In HT-PWM mode, the counter value is incremented by 2 from the value of TSG3nDTC0 and decremented by 2 down to the value of TSG3nDTC0 after the counter value matches with the value of TSG3nCMP0E + TSG3nDTC0. The counter increments from 00000_H, 00001_H, 00002_H, 00003_H, … in all modes except for HT-PWM mode.

Counter clear

The 18-bit counter is cleared by the match of the counter value and the value of TSG3nCMP0E in all modes except for HT-PWM mode. (Clearing operation is not available in HT-PWM mode.)

Counter read during counting

In the TSG3n, the 18-bit counter value during counting can be read through TSG3nCNTE.

Count stop operation

When count operation is stopped (when TS0TE is changed from 1 to 0), TSG3nCNTE and TSG3nSBCE retain the counter value when stopped.

Interrupt operation

In the TSG3n, the following interrupts are generated.

- INTTSG3nI0: A period interrupt by a match of the 18-bit counter value with the TSG3nDTC0 value in HT-PWM mode. A compare match interrupt of the 18-bit counter value with the TSG3nCMP0E buffer register in any mode other than HT-PWM mode.
- INTTSG3nI1: A compare match interrupt of the 18-bit counter value with the TSG3nCMP1E buffer register.
- INTTSG3nI2: A compare match interrupt of the 18-bit counter value with the TSG3nCMP2E buffer register.
- INTTSG3nI3: A compare match interrupt of the 18-bit counter value with the TSG3nCMP3E buffer register.
- INTTSG3nI4: A compare match interrupt of the 18-bit counter value with the TSG3nCMP4E buffer register.
- INTTSG3nI5: A compare match interrupt of the 18-bit counter value with the TSG3nCMP5E buffer register.
- INTTSG3nI6: A compare match interrupt of the 18-bit counter value with the TSG3nCMP6E buffer register.
- INTTSG3nI7: A compare match interrupt of the 18-bit counter value with the TSG3nCMP7E buffer register.
- INTTSG3nI8: A compare match interrupt of the 18-bit counter value with the TSG3nCMP8E buffer register.
- INTTSG3nI9: A compare match interrupt of the 18-bit counter value with the TSG3nCMP9E buffer register.
- INTTSG3nI10: A compare match interrupt of the 18-bit counter value with the TSG3nCMP10E buffer register.
- INTTSG3nI11: A compare match interrupt of the 18-bit counter value with the TSG3nCMP11E buffer register.
- INTTSG3nI12: A compare match interrupt of the 18-bit counter value with the TSG3nCMP12E buffer register.
- INTTSG3nIPEK: A peak interrupt when the 18-bit counter switches from incrementing to decrementing.
- INTTSG3nIVLY: A valley interrupt when the 18-bit counter switches from decrementing to incrementing.
- INTTSG3nIER: A simultaneous active state detection interrupt of the positive phase and inverse phase
- INTTSG3nIWN: A warning detection interrupt

25.4.1.2 Function of Compare Registers

The functions of the compare registers in each operating mode are shown in the following tales.

Table 25.39 Compare Register Functions in Each Mode (1/7)

Operating Mode	TSG3nCMP0E	TSG3nCMP1E	TSG3nCMP2E
PWM mode	PWM period	TSG3nO1 clear timing	TSG3nO1 set timing
HT-PWM mode	PWM period	TSG3nO1 clear timing TSG3nO2 set timing	TSG3nO1 set timing TSG3nO2 clear timing
SP-PWM mode	PWM period	TSG3nO1 clear timing TSG3nO2 set timing	TSG3nO1 set timing TSG3nO2 clear timing
120-DC mode	PWM period	Select TSG3nO1, TSG3nO3, or TSG3nO5 output by TSG3nPAT0	Select TSG3nO1, TSG3nO3, or TSG3nO5 output by TSG3nPAT0
HSP-PWM mode	PWM period	TSG3nO1 clear timing	TSG3nO1 set timing

Table 25.39 Compare Register Functions in Each Mode (2/7)

Operating Mode	TSG3nCMP3E	TSG3nCMP4E	TSG3nCMP5E	TSG3nCMP6E
PWM mode	TSG3nO2 clear timing	TSG3nO2 set timing	TSG3nO3 clear timing	TSG3nO3 set timing
HT-PWM mode	Compare match interrupt	Compare match interrupt	TSG3nO3 clear timing TSG3nO4 set timing	TSG3nO3 set timing TSG3nO4 clear timing
SP-PWM mode	—	—	TSG3nO3 clear timing TSG3nO4 set timing	TSG3nO3 set timing TSG3nO4 clear timing
120-DC mode	Select TSG3nO2, TSG3nO4, or TSG3nO6 output by TSG3nPAT1W	Select TSG3nO2, TSG3nO4, or TSG3nO6 output by TSG3nPAT1W	Select TSG3nO1, TSG3nO3, or TSG3nO5 output by TSG3nPAT0W	Select TSG3nO1, TSG3nO3, or TSG3nO5 output by TSG3nPAT0W
HSP-PWM mode	TSG3nO2 clear timing	TSG3nO2 set timing	TSG3nO3 clear timing	TSG3nO3 set timing

Table 25.39 Compare Register Functions in Each Mode (3/7)

Operating Mode	TSG3nCMP7E	TSG3nCMP8E	TSG3nCMP9E	TSG3nCMP10E
PWM mode	TSG3nO4 clear timing	TSG3nO4 set timing	TSG3nO5 clear timing	TSG3nO5 set timing
HT-PWM mode	Compare match interrupt	Compare match interrupt	TSG3nO5 clear timing TSG3nO6 set timing	TSG3nO5 set timing TSG3nO6 clear timing
SP-PWM mode	—	—	TSG3nO5 clear timing TSG3nO6 set timing	TSG3nO5 set timing TSG3nO6 clear timing
120-DC mode	Select TSG3nO2, TSG3nO4, or TSG3nO6 output by TSG3nPAT1W	Select TSG3nO2, TSG3nO4, or TSG3nO6 output by TSG3nPAT1W	Select TSG3nO1, TSG3nO3, or TSG3nO5 output by TSG3nPAT0W	TSG3nO1, TSG3nO3, or TSG3nO5 output by TSG3nPAT0W
HSP-PWM mode	TSG3nO4 clear timing	TSG3nO4 set timing	TSG3nO5 clear timing	TSG3nO5 set timing

Table 25.39 Compare Register Functions in Each Mode (4/7)

Operating Mode	TSG3nCMP11E	TSG3nCMP12E	TSG3nDCMP0E	TSG3nDCMP1E
PWM mode	TSG3nO6 clear timing	TSG3nO6 set timing	Diagnostic output or A/D conversion trigger timing	Diagnostic output or A/D conversion trigger timing
HT-PWM mode	Compare match interrupt	Compare match interrupt	Diagnostic output or A/D conversion trigger timing	Diagnostic output or A/D conversion trigger timing
SP-PWM mode	—	—	Diagnostic output or A/D conversion trigger timing	Diagnostic output or A/D conversion trigger timing
120-DC mode	Select TSG3nO2, TSG3nO4, TSG3nO6 by TSG3nPAT1W	Select TSG3nO2, TSG3nO4, TSG3nO6 by TSG3nPAT1W	Diagnostic output or A/D conversion trigger timing	Diagnostic output or A/D conversion trigger timing
HSP-PWM mode	TSG3nO6 clear timing	TSG3nO6 set timing	Diagnostic output or A/D conversion trigger timing	Diagnostic output or A/D conversion trigger timing

Table 25.39 Compare Register Functions in Each Mode (5/7)

Operating Mode	TSG3nDCMP2E	TSG3nCMPUE	TSG3nCMPVE	TSG3nCMPWE
PWM mode	Diagnostic output or A/D conversion trigger timing	—	—	—
HT-PWM mode	Diagnostic output or A/D conversion trigger timing	The TSG3nCMPUE set value is used as the set value of TSG3nCMP1E and TSG3nCMP2E.	The TSG3nCMPVE set value is used as the set value of TSG3nCMP5E and TSG3nCMP6E.	The TSG3nCMPWE set value is used as the set value of TSG3nCMP9E and TSG3nCMP10E.
SP-PWM mode	Diagnostic output or A/D conversion trigger timing	—	—	—
120-DC mode	Diagnostic output or A/D conversion trigger timing	—	—	—
HSP-PWM mode	Diagnostic output or A/D conversion trigger timing	—	—	—

Table 25.39 Compare Register Functions in Each Mode (6/7)

Operating Mode	TSG3nUPWE	TSG3nVPWE	TSG3nWPWE
PWM mode	—	—	—
HT-PWM mode	—	—	—
SP-PWM mode	The sum of the TSG3nUPWE set value and the TSG3nCMP2E set value is used as the TSG3nCMP1E set value.	The sum of the TSG3nVPWE set value and the TSG3nCMP2E set value is used as the TSG3nCMP1E set value.	The sum of the TSG3nWPWE set value and the TSG3nCMP2E set value is used as the TSG3nCMP1E set value.
120-DC mode	—	—	—
HSP-PWM mode	—	—	—

Table 25.39 Compare Register Functions in Each Mode (7/7)

Operating Mode	TSG3nHSPCMUE, TSG3nHSPSHUE	TSG3nHSPCMVE, TSG3nHSPSHVE	TSG3nHSPCMWE, TSG3nHSPSHWE
PWM mode	—	—	—
HT-PWM mode	—	—	—
SP-PWM mode	—	—	—
120-DC mode	—	—	—
HSP-PWM mode	TSG3nCMP1E-4E is set based on the TSG3nHSPCMUE set value and the set values in TSG3nCMP0E, TSG3nDTC0, TSG3nDTC1, and TSG3nHSPSHUE.	TSG3nCMP5E-8E is set based on the TSG3nHSPCMVE set value and the set values of TSG3nCMP0E, TSG3nDTC0, TSG3nDTC1, and TSG3nHSPSHVE.	TSG3nCMP9E-12E is set based on the TSG3nHSPCMWE set value and the set values of TSG3nCMP0E, TSG3nDTC0, TSG3nDTC1, and TSG3nHSPSHWE.

25.4.1.3 Compare Register Rewrite Operation

TSG3 can be set to reload mode or anytime rewrite mode using theTSG3nRMC bit.

Reload mode is enabled when TSG3nRMC = 0. The registers listed as “enabled” on the “Reload” column in **Section 25.3.1, List of Registers** are simultaneously updated at the reload timing.

Anytime rewrite mode is enabled when TSG3nRMC = 1. The registers are updated independently every time the value is written to the relevant register.

The update timing of the registers to be reloaded in reload mode and anytime rewrite mode in each mode are listed in the following table.

Table 25.40 Updating Timing of Compare Registers by Mode

Mode	Anytime Rewrite TSG3nRMC = 1	Reload TSG3nRMC = 0
PWM mode	TSG3nCMP0E: At the next counter clear timing of the 18-bit counter	At reload timing
	Registers other than TSG3nCMP0E: At a write access to the register	
HT-PWM mode	TSG3nCMP0E: At the next peak or valley timing of TSG3nCNTE	At reload timing
	TSG3nCMP1E, 2E, 5E, 6E, 9E, 10E: At writing 1 to the TSG3nIMT bit	
	Registers other than TSG3nCMP0E,1E, 2E, 5E, 6E, 9E, 10E: At a write access to the register	
SP-PWM mode	TSG3nCMP0E: At the next counter clear timing of the 18-bit counter	At reload timing
	Registers other than TSG3nCMP0E: At a write access to the register	
120-DC mode	Setting prohibited	At reload timing
HSP-PWM mode	Setting prohibited	At reload timing

Anytime Rewrite Mode

In this mode, the compare registers are rewritten independently. Whenever a value is written to the compare register, the written value is reflected at the timing of **Table 25.40**.

Reload mode (Simultaneous Rewrite Function)

Writing to TSG3nCMP1E (TSG3nCMP1, TSG3nCMP1W, TSG3nCMPUE, TSG3nCMPU, TSG3nUPWE, TSG3nUPW, and TSG3nHSPCMUE) enables reload (sets the reload request flag (TSG3nSTR0.TSG3nRSF)), and the values of all the pertinent registers are updated simultaneously at the next reload timing (reload).

The reload timing is the peak or valley timing of the 18-bit counter when the TSG3nTRG0.TSG3nTS bit is changed from 0 to 1. Reloading is controlled by TSG3nCTL4.TSG3nPRE, and TSG3nVRE.

Writing to any register other than TSG3nCMP1E (TSG3nCMP1, TSG3nCMP1W, TSG3nCMPUE, TSG3nCMPU, TSG3nUPWE, TSG3nUPW, and TSG3nHSPCMUE) does not enable reloading.

Do not write to the registers to be reloaded until the next reload timing after reloading is enabled by writing to TSG3nCMP1E (TSG3nCMP1, TSG3nCMP1W, TSG3nCMPUE, TSG3nCMPU, TSG3nUPWE, TSG3nUPW, and TSG3nHSPCMUE).

The pertinent registers should be rewritten when the reload request flag (TSG3nSTR0.TSG3nRSF) is 0.

Rewriting registers to be reloaded by DMA transfer

Some of the registers to be reloaded can be rewritten by DMA transfer. DMA transfer is performed as follows.

Table 25.41 Example of DMA Transfer Order of Registers to be Reloaded

Address	Register Name	DMA Transfer Order (Example)
<TSG3n_base> + 040_H	TSG3nCMP1W	↑
<TSG3n_base> + 044_H	TSG3nCMP5W	
<TSG3n_base> + 048_H	TSG3nCMP9W	
<TSG3n_base> + $04C_H$	TSG3nCMP3W	
<TSG3n_base> + 050_H	TSG3nCMP7W	
<TSG3n_base> + 054_H	TSG3nCMP11W	
<TSG3n_base> + 058_H	TSG3nCMP0	
<TSG3n_base> + $05C_H$	TSG3nDCMP0W	
<TSG3n_base> + 060_H	TSG3nDCMP2	
<TSG3n_base> + 064_H	TSG3nPAT0W	
<TSG3n_base> + 068_H	TSG3nPAT1W	
<TSG3n_base> + $06C_H$	TSG3nDTC0W	
<TSG3n_base> + 070_H	TSG3nDTC1W	

Table 25.42 Example of DMA Transfer Order of Registers to be Reloaded

Address	Register Name	DMA Transfer Order (Example)
<TSG3n_base> + 140_H	TSG3nDCMP2E	↓
<TSG3n_base> + 144_H	TSG3nDCMP1E	
<TSG3n_base> + 148_H	TSG3nDCMP0E	
<TSG3n_base> + $14C_H$	TSG3nCMP0E	
<TSG3n_base> + 150_H	TSG3nCMP12E	
<TSG3n_base> + 154_H	TSG3nCMP11E	
<TSG3n_base> + 158_H	TSG3nCMP8E	
<TSG3n_base> + $15C_H$	TSG3nCMP7E	
<TSG3n_base> + 160_H	TSG3nCMP4E	
<TSG3n_base> + 164_H	TSG3nCMP3E	
<TSG3n_base> + 168_H	TSG3nCMP10E	
<TSG3n_base> + $16C_H$	TSG3nCMP9E	
<TSG3n_base> + 170_H	TSG3nCMP6E	
<TSG3n_base> + 174_H	TSG3nCMP5E	
<TSG3n_base> + 178_H	TSG3nCMP2E	
<TSG3n_base> + $17C_H$	TSG3nCMP1E	

Table 25.43 Duty Setting in HT-PWM Mode

Address	Register Name	DMA Transfer Order (Example)
<TSG3n_base> + 180_H	TSG3nCMPWE	↓
<TSG3n_base> + 184_H	TSG3nCMPVE	
<TSG3n_base> + 188_H	TSG3nCMPUE	

Table 25.44 Active Width Setting in SP-PWM Mode

Address	Register Name	DMA Transfer Order (Example)
<TSG3n_base> + 190_H	TSG3nWPWE	↓
<TSG3n_base> + 194_H	TSG3nVPWE	
<TSG3n_base> + 198_H	TSG3nUPWE	

Table 25.45 Shift Width and Duty Setting in HSP-PWM Mode

Address	Register Name	DMA Transfer Order (Example)
<TSG3n_base> + 120_H	TSG3nHSPSHWE	↓
<TSG3n_base> + 124_H	TSG3nHSPSHVE	
<TSG3n_base> + 128_H	TSG3nHSPSHUE	
<TSG3n_base> + $12C_H$	TSG3nHSPCMWE	
<TSG3n_base> + 130_H	TSG3nHSPCMVE	
<TSG3n_base> + 134_H	TSG3nHSPCMUE	

NOTES

1. TSG3nCTL4 and TSG3nIOC3 should be rewritten individually.
2. Since writing to TSG3nCMP1E (including TSG3nCMP1, TSG3nCMP1W, TSG3nCMPUE, TSG3nCMPU, TSG3nUPWE, TSG3nUPW, and TSG3nHSPCMUE) enables reloading, it should be rewritten after all the other registers to be reloaded have been rewritten (ready to be reloaded)

(1) Example of Operation in Anytime Rewrite Mode

In this mode, the values written to the compare registers (TSG3nCMP1E to TSG3nCMP12E) are transferred to the internal buffer registers immediately, and are compared with the counter value.

The values are transferred to the internal compare buffer registers one clock cycle (PCLK) after being written to the compare registers (TSG3nCMP1E to TSG3nCMP12E).

The transfer timing of the TSG3nCMP0E is the peak or valley timing (only in HT-PWM mode) of the 18-bit counter after being written to the compare registers, or at the match timing of the TSG3nCMP0E value with the 18-bit counter value (in any mode other than HT-PWM mode).

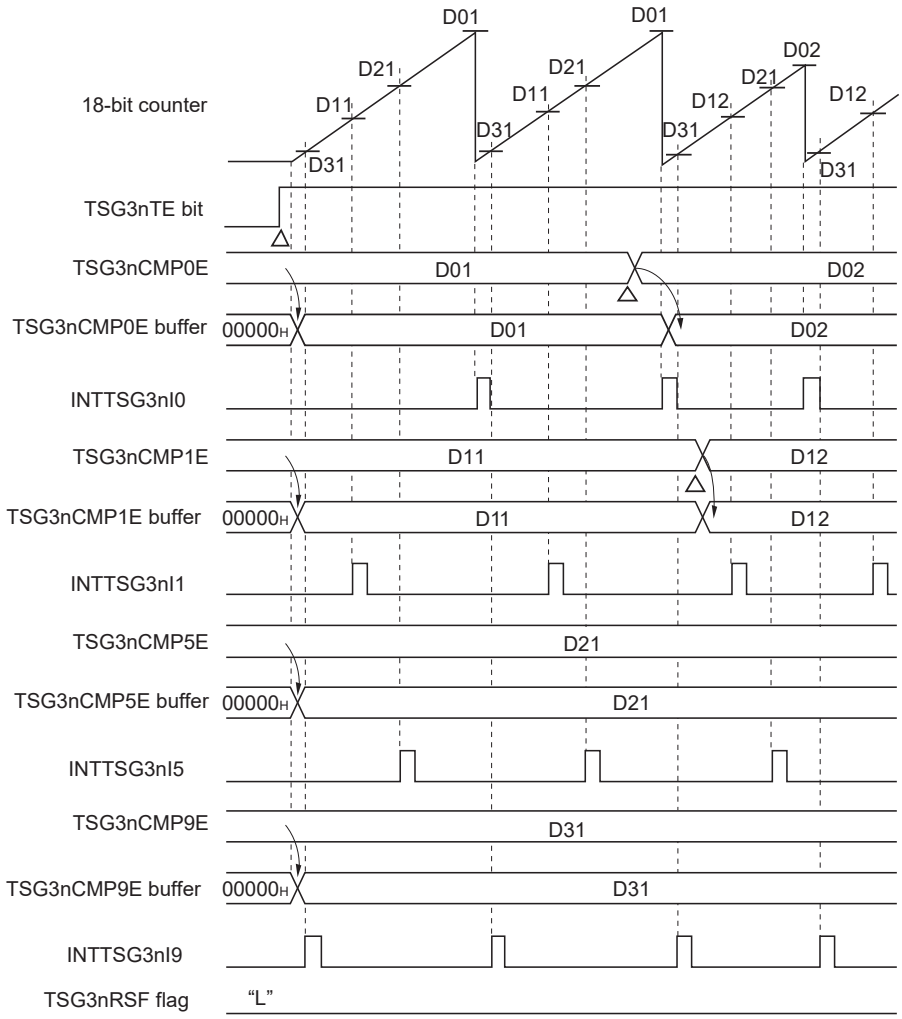

Note: D01, D02: TSG3nCMP0E setting value (00000_H-$3FFFF_H$)
D11, D12: TSG3nCMP1E setting value (00000_H-$3FFFF_H$)
D21: TSG3nCMP5E setting value (00000_H-$3FFFF_H$)
D31: TSG3nCMP9E setting value (00000_H-$3FFFF_H$)}
Δ: Write Access

Figure 25.8 Anytime Rewrite Timing (Example in PWM Mode)

(a) Data reflection on PWM during Anytime Rewrite in HT-PWM

In anytime rewrite operation in HT-PWM mode, the values are transferred to the buffer at the timing to write 1 to the TSG3nIMT bit after the settings of TSG3nCMP1E, 2E, 5E, 6E, 9E and 10E registers are modified and PWM output is forcibly set/cleared depending on the modified set value.

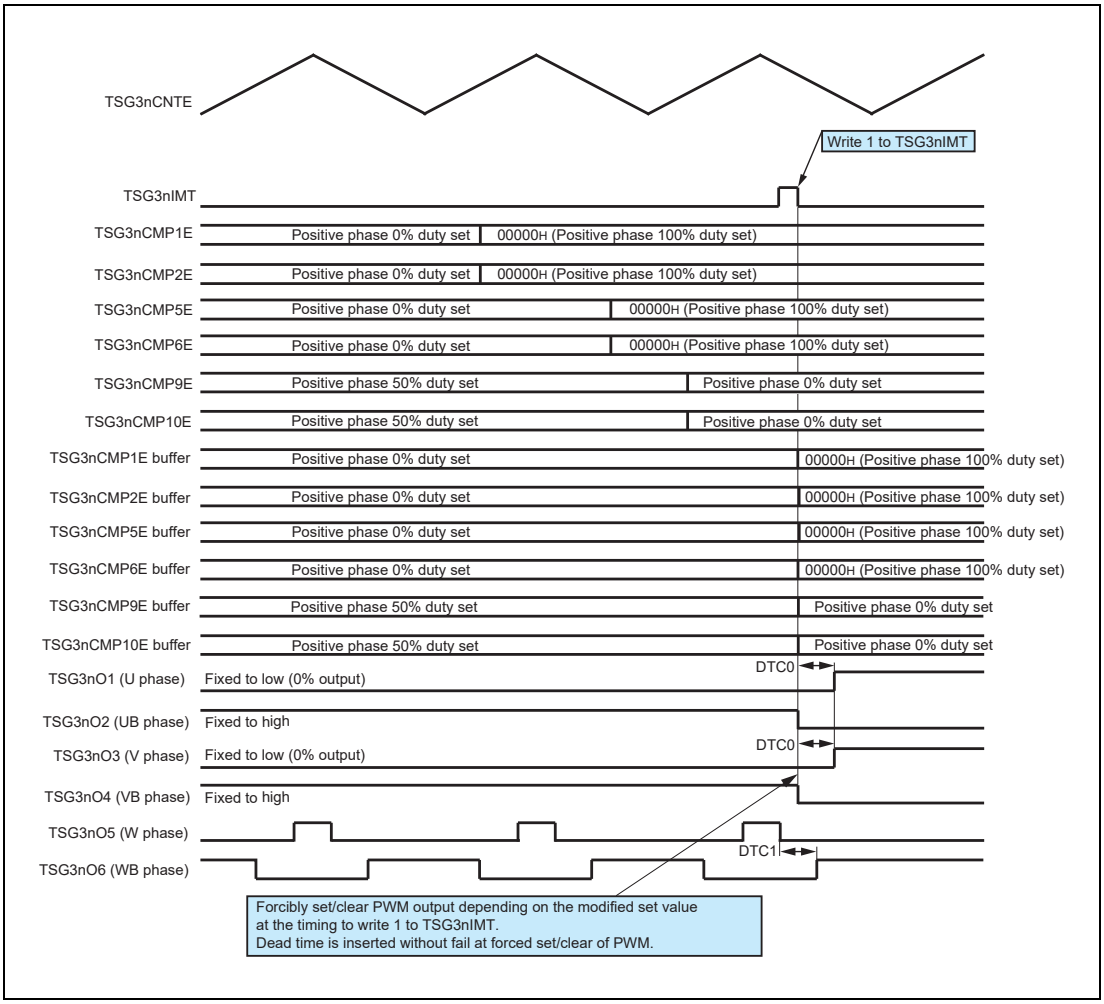

Figure 25.9 Update Timing of TSG3nCMP1E, 2E, 5E, 6E, 9E,and 10E at Anytime Rewrite Operation in HT-PWM Mode

(2) Example of Operation in Reload Mode (Simultaneous Rewrite Function)

The rewritten values of the registers to be reloaded (the registers listed in the **Section 25.3.1, List of Registers** with "Enabled" in the column of "Reload") can be transferred to the corresponding buffer registers simultaneously at the reload timing.

The registers should be rewritten when the pertinent reload request flag (TSG3nSTR0.TSG3nRSF) is 0.

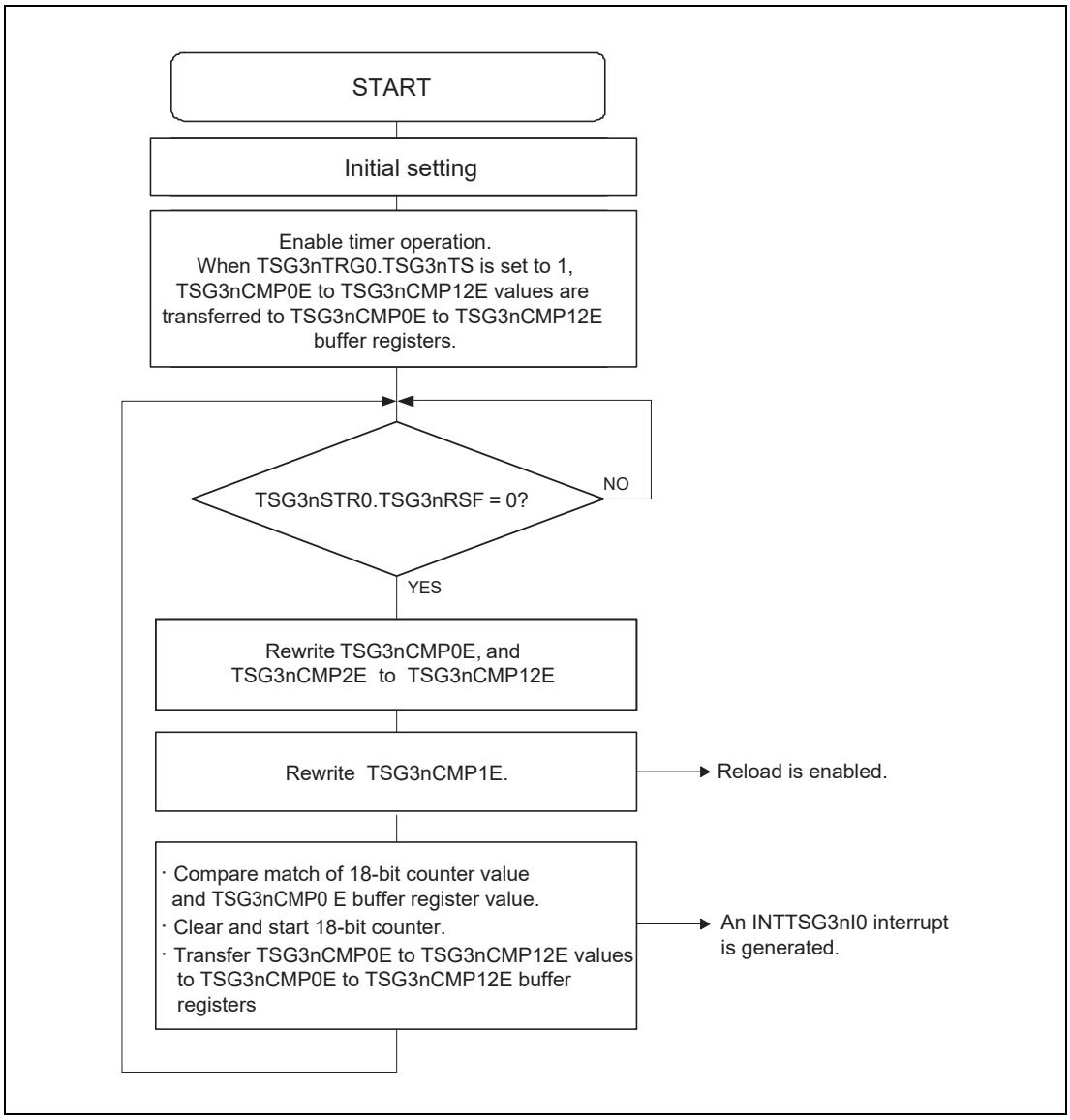

Figure 25.10 Basic Operation Flow in Reload Mode (Simultaneous Rewrite Function) (Example of PWM Mode)

CAUTION

Writing to TSG3nCMP1E also enables reloading. Therefore, TSG3nCMP1E should be rewritten after TSG3nCMP0E and TSG3nCMP2E to TSG3nCMP12E registers have been rewritten.

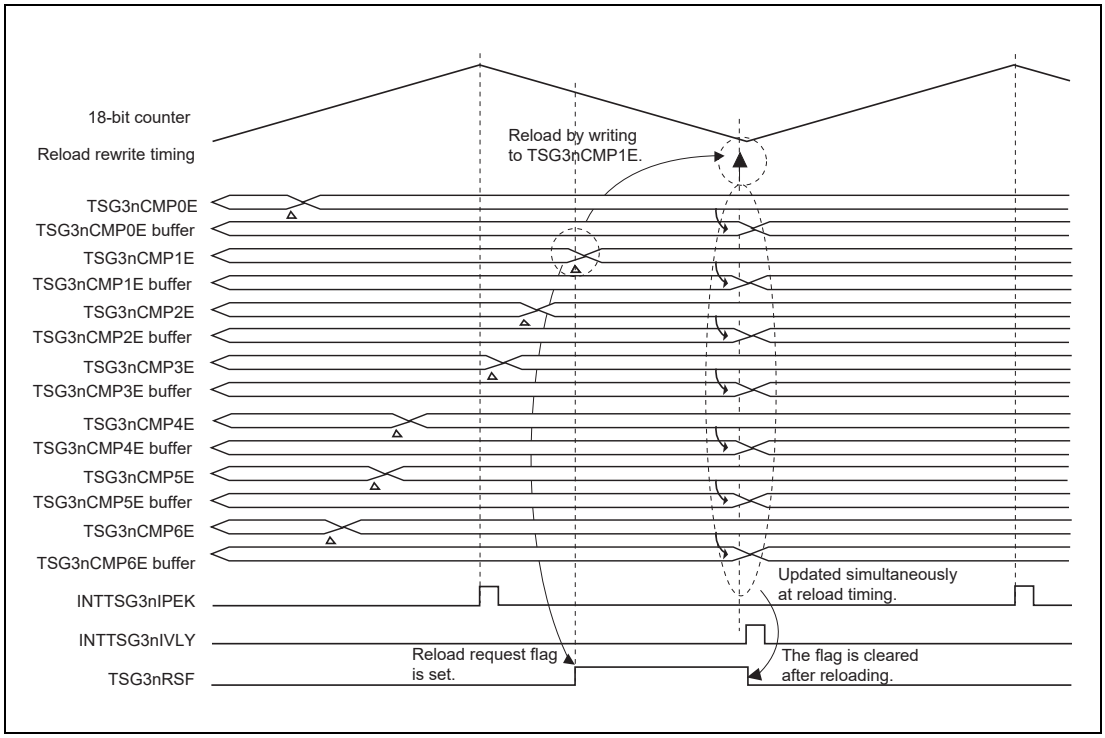

Figure 25.11 Simultaneous Rewrite Timing (Example of HT-PWM Mode) (1/2)

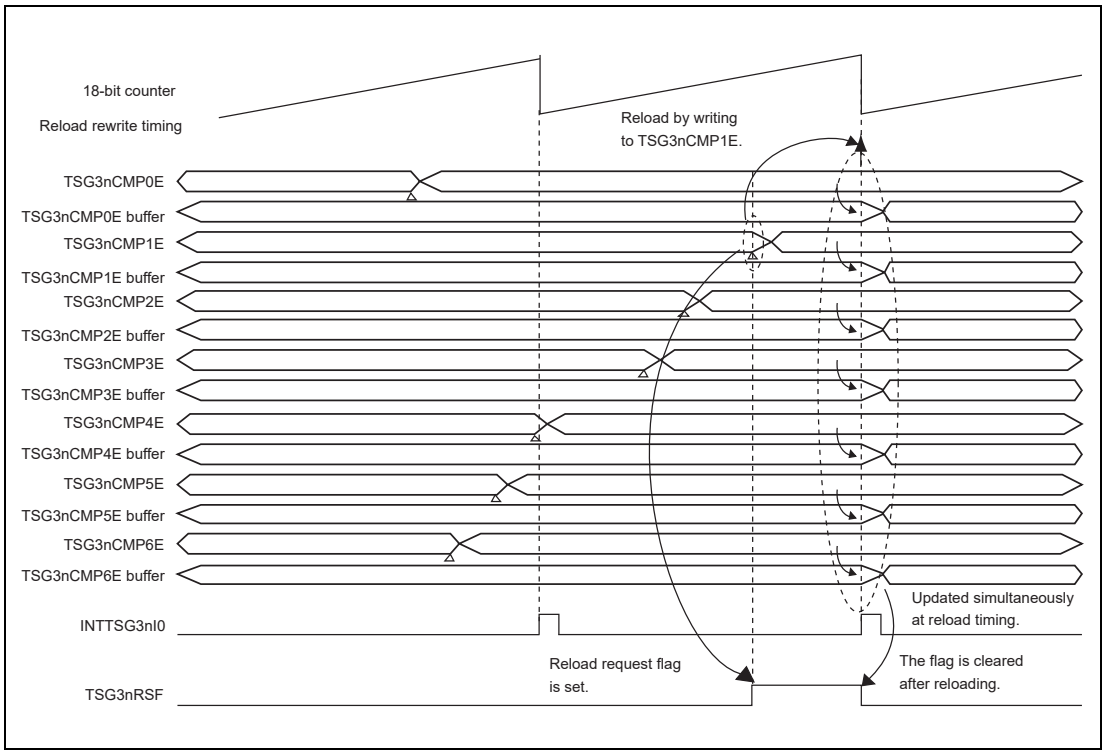

Figure 25.11 Simultaneous Rewrite Timing (Example of PWM Mode) (2/2)

(a) Reload Rewrite Setting Example in Each Mode

Reloading conditions and setting examples are shown in the following tables.

Table 25.46 List of Reload Settings (when TSG3nCTL3.TSG3nRIA = 0)

Mode	TSG3nCTL4. TSG3nPRE	TSG3nCTL4. TSG3nVRE	TSG3nCTL4. TSG3nPIE	TSG3nCTL4. TSG3nVIE	TSG3nCTL4. TSG3nRCC04-TSG3nRCC00	Reload
PWM mode SP-PWM mode 120-DC mode HSP-PWM mode	0	0/1	0/1	0/1	Any value	Setting prohibited
	1	0	0/1	0/1	Any value	When INTTSG3nI0 is generated.
	1	1	0/1	0/1	Any value	When INTTSG3nI0 is generated.
HT-PWM mode	0	0	0/1	0/1	Any value	Setting prohibited
	0	1	0/1	0/1	Any value	When INTTSG3nIVLY is generated.
	1	0	0/1	0/1	Any value	When INTTSG3nIPEK is generated
	1	1	0/1	0/1	Any value	When INTTSG3nIPEK or INTTSG3nIVLY is generated.

Table 25.47 List of Reload Settings (when TSG3nCTL3.TSG3nRIA = 1)

Mode	TSG3nCTL4. TSG3nPRE	TSG3nCTL4. TSG3nVRE	TSG3nCTL4. TSG3nPIE	TSG3nCTL4. TSG3nVIE	TSG3nCTL4. TSG3nRCC04-TSG3nRCC00	Reload
PWM mode SP-PWM mode 120-DC mode HSP-PWM mode	0	0/1	0/1	0/1	Any value	Setting prohibited
	1	0	0	0/1	Any value	Setting prohibited
	1	0	1	0/1	Any value	When INTTSG3nI0 is generated
	1	1	0	0/1	Any value	Setting prohibited
	1	1	1	0/1	Any value	When INTTSG3nI0 is generated
HT-PWM mode	0	0	0/1	0/1	Any value	Setting prohibited
	0	1	0	0	Any value	Setting prohibited
	0	1	0	1	Any value	When INTTSG3nIVLY is generated
	0	1	1	0	Any value	Setting prohibited
	0	1	1	1	Any value	When INTTSG3nIVLY is generated
	1	0	0	0/1	Any value	Setting prohibited
	1	0	1	0/1	Any value	When INTTSG3nIPEK is generated
	1	1	0	0	Any value	Setting prohibited
	1	1	0	1	Any value	When INTTSG3nIVLY is generated
	1	1	1	0	Any value	When INTTSG3nIPEK is generated
	1	1	1	1	Any value	When INTTSG3nIPEK or INTTSG3nIVLY is generated

25.4.1.4 List or Outputs in Each Mode

The list of timer outputs (TSG3nO0-7 pins) in each mode is shown in the following tables.

Table 25.48 List of Timer Outputs in Each mode (1/3)

Operating Mode	TSG3nO0 Pin	TSG3nO1 Pin	TSG3nO2 Pin
PWM mode	— (Fixed to low.)	Outputs a PWM signal by compare match of TSG3nCMP1E and TSG3nCMP2E.	Outputs a PWM signal by compare match of TSG3nCMP3E and TSG3nCMP4E.
HT-PWM mode	Outputs the status indicating whether the 18-bit counter or 18-bit sub-counter is incremented or decremented.	Outputs a positive phase PWM signal (with dead time) by compare match of TSG3nCMP1E and TSG3nCMP2E.	Outputs an inverse phase PWM signal (with dead time) to TSG3nO1 pin.
SP-PWM mode	— (Fixed to low.)	Outputs a positive phase PWM signal (with dead time) by compare match of TSG3nCMP1E and TSG3nCMP2E.	Outputs an inverse phase PWM signal (with dead time) to TSG3nO1.
120-DC mode	— (Fixed to low.)	Outputs a PWM signal by TSG3nCMP1E, TSG3nCMP2E, TSG3nCMP5E, TSG3nCMP6E, TSG3nCMP9E, and TSG3nCMP10E.	Outputs a PWM signal by TSG3nCMP3E, TSG3nCMP4E, TSG3nCMP7E, TSG3nCMP8E, TSG3nCMP11E, and TSG3nCMP12E.
HSP-PWM mode	— (Fixed to low.)	Outputs a PWM signal by compare match of TSG3nCMP1E and TSG3nCMP2E.	Outputs a PWM signal by compare match of TSG3nCMP3E and TSG3nCMP4E.

Table 25.48 List of Timer Outputs in Each mode (2/3)

Operating Mode	TSG3nO3 Pin	TSG3nO4 Pin	TSG3nO5 Pin
PWM mode	Outputs a PWM signal by compare match of TSG3nCMP5E and TSG3nCMP6E.	Outputs a PWM signal by compare match of TSG3nCMP7E and TSG3nCMP8E.	Outputs a PWM signal by compare match of TSG3nCMP9E and TSG3nCMP10E.
HT-PWM mode	Outputs a positive phase PWM signal (with dead time) by compare match of TSG3nCMP5E and TSG3nCMP6E.	Outputs an inverse phase PWM signal (with dead time) to TSG3nO3.	Outputs a positive phase PWM signal (with dead time) by compare match of TSG3nCMP9E and TSG3nCMP10E.
SP-PWM mode	Outputs a positive phase PWM signal (with dead time) by compare match of TSG3nCMP5E and TSG3nCMP6E.	Outputs an inverse phase PWM signal (with dead time) to TSG3nO3.	Outputs a positive phase PWM signal (with dead time) by compare match of TSG3nCMP9E and TSG3nCMP10E
120-DC mode	Outputs a PWM signal by TSG3nCMP1E, TSG3nCMP2E, TSG3nCMP5E, TSG3nCMP6E, TSG3nCMP9E, and TSG3nCMP10E.	Outputs a PWM signal by TSG3nCMP3E, TSG3nCMP4E, TSG3nCMP7E, TSG3nCMP8E, TSG3nCMP11E, and TSG3nCMP12E.	Outputs a PWM signal by TSG3nCMP1E, TSG3nCMP2E, TSG3nCMP5E, TSG3nCMP6E, TSG3nCMP9E, and TSG3nCMP10E
HSP-PWM mode	Outputs a PWM signal by compare match of TSG3nCMP5E and TSG3nCMP6E	Outputs a PWM signal by compare match of TSG3nCMP7E and TSG3nCMP8E	Outputs a PWM signal by compare match of TSG3nCMP9E and TSG3nCMP10E

Table 25.48 List of Timer Outputs in Each mode (3/3)

Operating Mode	TSG3nO6 Pin	TSG3nO7 Pin
PWM mode	Outputs a PWM signal by compare match of TSG3nCMP11E and TSG3nCMP12E	Outputs a diagnostic signal or A/D conversion trigger.*1
HT-PWM mode	Outputs an inverse phase PWM signal (with dead time) to TSG3nO5	Outputs a diagnostic signal or A/D conversion trigger.*1
SP-PWM mode	Outputs an inverse phase PWM signal (with dead time) to TSG3nO5	Outputs a diagnostic signal or A/D conversion trigger*1
120-DC mode	Outputs a PWM signal by TSG3nCMP3E, TSG3nCMP4E, TSG3nCMP7E, TSG3nCMP8E, TSG3nCMP11E, and TSG3nCMP12E	Outputs a diagnostic signal or A/D conversion trigger.*1
HSP-PWM mode	Outputs a PWM signal by compare match of TSG3nCMP11E and TSG3nCMP12E	Outputs a diagnostic signal or A/D conversion trigger*1

Note 1. For TSG3nO7, See **Section 25.4.1.4 (a), TSG3nO7 Pin Output Control**

(a) TSG3nO7 Pin Output Control

The TSG3nO7 pin can output a pulse of A/D conversion trigger (TSG3nIOC1.TSG3nTGS = 0) or diagnostic output (TSG3nIOC1.TSG3nTGS = 1). When outputting a pulse of A/D conversion trigger, the TSG3nO7 pin is activated at the rising edge of the TSG3nADTRG0 signal, and inactivated at the rising edge of the TSG3nADTRG1 signal. When the TSG3nADTRG0 signal is detected while the TSG3nO7 pin is active, the TSG3nO7 pin remains active. When the TSG3nADTRG1 signal is detected while the TSG3nO7 pin is inactive, the TSG3nO7 pin remains inactive. If TSG3nADTRG0 and TSG3nADTRG1 signal triggers occur simultaneously, the TSG3nO7 pin is inactivated.

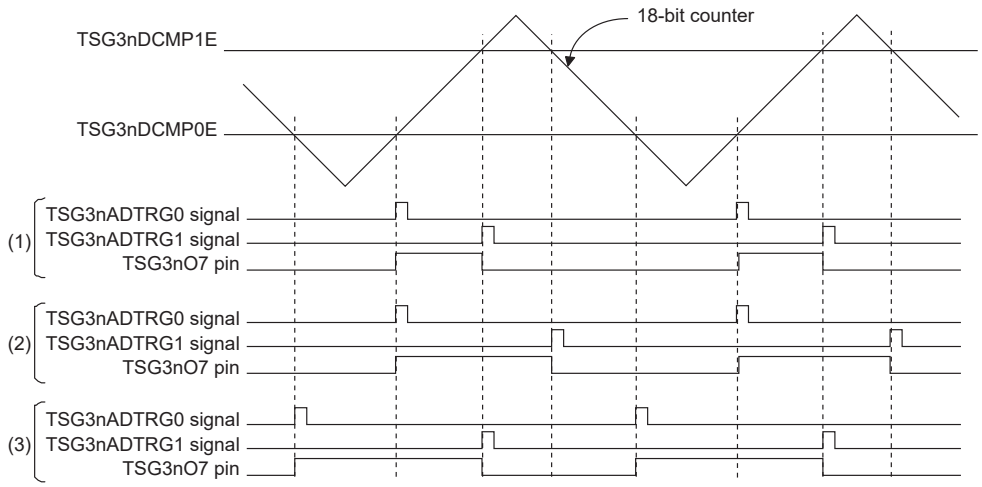

Note: (1) When TSG3nDCMP0E register<TSG3nDCMP1E register, TSG3nCTL5 register = 0004_H, and TSG3nCTL6 register = 0010_H
(2) When TSG3nDCMP0E register<TSG3nDCMP1E register, TSG3nCTL5 register = 0004_H, and TSG3nCTL6 register = 0020_H
(3) When TSG3nDCMP0E register<TSG3nDCMP1E register, TSG3nCTL5 register = 0008_H, and TSG3nCTL6 register = 0010_H

Figure 25.12 Example of A/D Trigger Output Timing of TSG3nO7 Pin (TSG3nIOC1.TSG3nTGS = 0)

During diagnostic output, the active level is output on the TSG3nO7 pin with the width specified by the TSG3nCTL0.TSG3nDWD bit when the values of the TSG3nDCMP0E to TSG3nDCMP2E bits match that of the 18-bit counter. If a TSG3nDCMP0E to TSG3nDCMP2E value again matches the value of the 18-bit counter value while the diagnostic output on the TSG3nO7 pin is already at the active level, pulse output on the TSG3nO7 pin continues for the number of cycles of PCLK (8 or 16) set by the TSG3nDWD bit from the point of the later match.

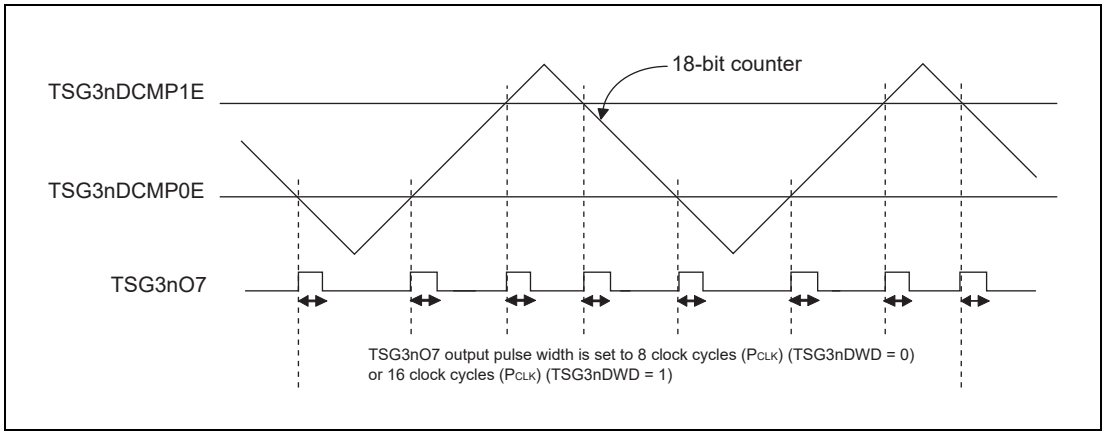

Figure 25.13 Example of TSG3nO7 Pin Diagnostic Pulse Output Timing (1) (TSG3nIOC1.TSG3nTGS = 1)

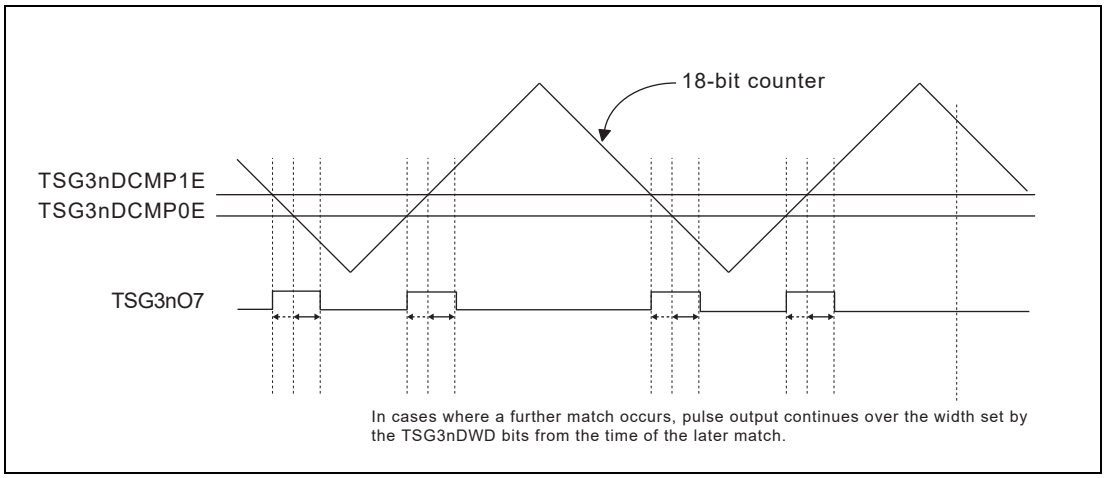

Figure 25.14 Example of TSG3nO7 Pin Diagnostic Pulse Output Timing (2) (with Pulse Output Width Overlapped)

25.4.1.5 Restart

Setting TSG3nTRG0.TSG3nTS to 1 or input to TSG3nTSST while the timer is operating (TSG3nSTR0.TSG3nTE = 1) leads to the following operations.

- Initializing the following counters;

  18-bit main counter, 18-bit sub-counter, interrupt skipping counter

- Initializing the following flags;

  TSG3nCUF, TSG3nSUF, TSG3nRSF, and TSG3nTE of the TSG3nSTR0 register

  TSG3nOPF2 to TSG3nOPF0 of the TSG3nSTR1 register (TSG3nTSF is not applied)

  TSG3nPPF, TSG3nPEF, TSG3nTDF, TSG3nNDF, TSG3nPRF, and TSG3nPTF of the TSG3nSTR2 register (TSG3nTBF2 to TSG3nTBF20 are not applied)

- Reloading the following registers;

  TSG3nCTL2, TSG3nCTL4, TSG3nIOC3, TSG3nCMP0, TSG3nCMP0E, TSG3nCMPmW (m = 1, 3, 5, 7, 9, or 11)

  TSG3nCMP1 to TSG3nCMP12, TSG3nCMP1E to TSG3nCMP12E

  TSG3nDCMP0W, TSG3nDCMP2, TSG3nDCMP0E to TSG3nDCMP2E

  TSG3nPAT0W, TSG3nPAT1W

  TSG3nCMPU, TSG3nCMPV, TSG3nCMPW

  TSG3nCMPUE, TSG3nCMPVE, TSG3nCMPWE

  TSG3nUPW, TSG3nVPW, TSG3nWPW

  TSG3nUPWE, TSG3nVPWE, TSG3nWPWE

  TSG3nHSPSHUE, TSG3nHSPSHVE, TSG3nHSPSHWE

  TSG3nHSPCMUE, TSG3nHSPCMVE, TSG3nHSPCMWE

- Reflecting the settings in the following register;

  TSG3nOPT0*[1]

The dead time is always inserted because the dead time counter continues counting while the dead time control registers TSG3nDTC0W and TSG3nDTC1W are reloaded on restart.

If the counter is restarted while diagnostic output is in progress, the output is initialized.

Note 1. The settings in the TSG3nOPT0 register bits are reflected at the timings described below:
For TSG3nSOC
Switching from 0 to 1: immediately after written
Switching from 1 to 0: when the register is reloaded
For TSG3nSTE, TSG3nPOT, TSG3nPSS, TSG3nIDC, and TSG3nPSC
• At the next timer cycle
• When the output patterns are switched

25.4.2 Match Interrupt

The TSG3n can generate interrupts such as a compare match interrupt (INTTSG3nIm), a peak interrupt (INTTSG3nIPEK), and a valley interrupt (INTTSG3nIVLY). For an error interrupt and warning interrupt (INTTSG3nIER and INTTSG3nIWN), see **Section 25.4.6, Error/Warning Interrupt**.

A period interrupt (INTTSG3nI0) is generated for each timer period. In HT-PWM mode, it is generated when the TSG3nDTC0 buffer register value matches with the 18-bit counter value. When the 18-bit counter performs sawtooth waveform operation (PWM mode, SP-PWM mode, 120-DC mode, and HSP-PWM mode), it is generated after the 18-bit counter value has matched with the TSG3nCMP0E buffer register value.

A compare-match interrupt (INTTSG3nIm) is generated by a match of the TSG3nCMPmE buffer register value with the 18-bit counter value depending on the compare register to be used in each operating mode (m = 1 to 12).

A peak interrupt (INTTSG3nIPEK) is generated in all the modes. In HT-PWM mode, it is generated when the 18-bit counter switches from incrementing to decrementing. When the 18-bit counter performs sawtooth waveform operation (PWM mode, SP-PWM mode, 120-DC mode, and HSP-PWM mode), it is generated after the 18-bit counter value has matched with the TSG3nCMP0E buffer register value (the same timing as an INTTSG3nI0 interrupt).

A valley interrupt (INTTSG3nIVLY) is generated when the 18-bit counter switches from decrementing to incrementing in HT-PWM mode.

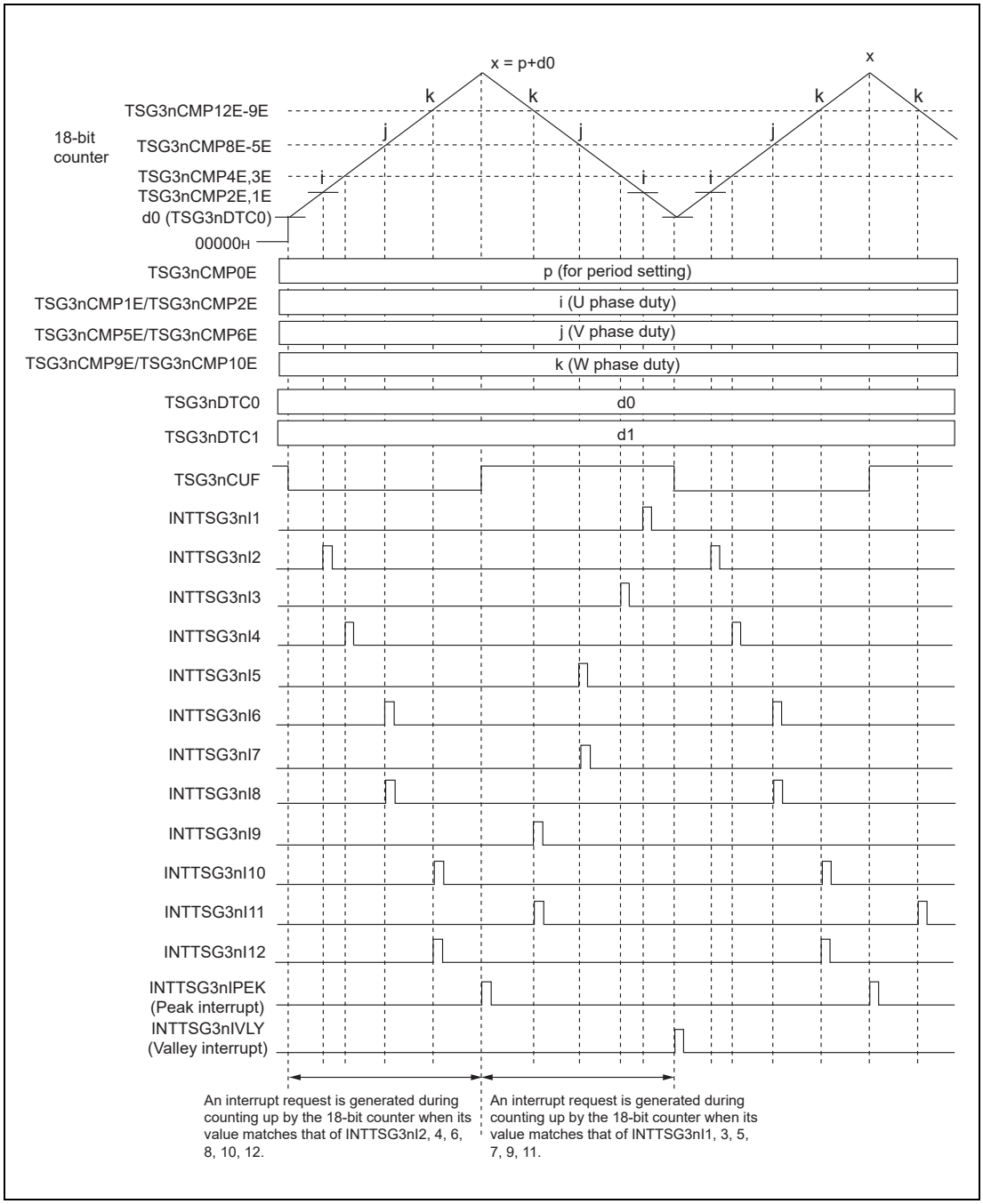

Figure 25.15 Interrupt Generation Example (Example of HT-PWM Mode)

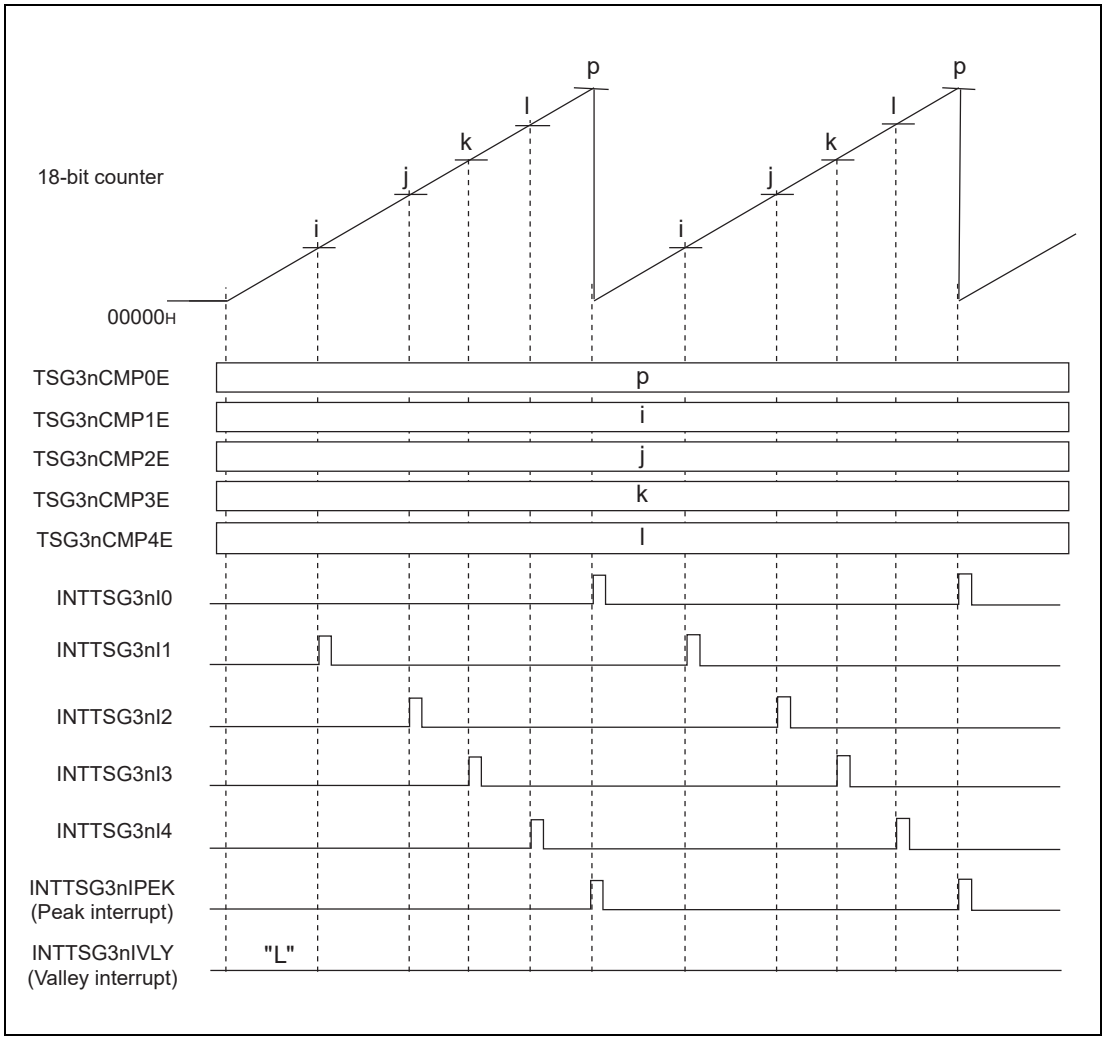

Figure 25.16 Interrupt Generation Example (Example of PWM Mode)

Interrupt in each mode (INTTSG3nI0-INTTSG3nI12, INTTSG3nIPEK, INTTSG3nIVLY, INTTSG3nIER, and INTTSG3nIWN)are listed in **Table 25.49**

Table 25.49 List of Interrupts in Each Mode (1/5)

Operating Mode	INTTSG3nI0	INTTSG3nI1	INTTSG3nI2	INTTSG3nI3
PWM mode	TSG3nCMP0E compare match interrupt	TSG3nCMP1E compare match interrupt*1	TSG3nCMP2E compare match interrupt*1	TSG3nCMP3E compare match interrupt*1
HT-PWM mode	Period interrupt	TSG3nCMP1E compare match interrupt*2 when decrementing (TSG3nCUF = 1)	TSG3nCMP2E compare match interrupt*2 when incrementing (TSG3nCUF = 0)	TSG3nCMP3E compare match interrupt*2 when decrementing (TSG3nCUF = 1)
SP-PWM mode	TSG3nCMP0E compare match interrupt	TSG3nCMP1E compare match interrupt*1	TSG3nCMP2E compare match interrupt*1	—
120-DC mode	TSG3nCMP0E compare match interrupt	TSG3nCMP1E compare match interrupt*1	TSG3nCMP2E compare match interrupt*1	TSG3nCMP3E compare match interrupt*1
HSP-PWM mode	TSG3nCMP0E compare match interrupt	TSG3nCMP1E compare match interrupt*1	TSG3nCMP2E compare match interrupt*1	TSG3nCMP3E compare match interrupt*1

Note 1. A compare match interrupt is not generated when TSG3nCMP0E < TSG3nCMPmE (m = 1 to 12)

Note 2. A compare match interrupt is not generated when 00000_H ≤ TSG3nCMPmE < TSG3nDTC0, (TSG3nCMP0E + TSG3nDTC0) < TSG3nCMPmE.

Table 25.49 List of Interrupts in Each Mode (2/5)

Operating Mode	INTTSG3nI4	INTTSG3nI5	INTTSG3nI6	INTTSG3nI7
PWM mode	TSG3nCMP4E compare match interrupt*1	TSG3nCMP5E compare match interrupt*1	TSG3nCMP6E compare match interrupt*1	TSG3nCMP7E compare match interrupt*1
HT-PWM mode	TSG3nCMP4E compare match interrupt*2 when incrementing (TSG3nCUF = 0)	TSG3nCMP5E compare match interrupt*2 when decrementing (TSG3nCUF = 1)	TSG3nCMP6E compare match interrupt*2 when incrementing (TSG3nCUF = 0)	TSG3nCMP7E compare match interrupt*2 when decrementing (TSG3nCUF = 1)
SP-PWM mode	—	TSG3nCMP5E compare match interrupt*1	TSG3nCMP6E compare match interrupt*1	—
120-DC mode	TSG3nCMP4E compare match interrupt*1	TSG3nCMP5E compare match interrupt*1	TSG3nCMP6E compare match interrupt*1	TSG3nCMP7E compare match interrupt*1
HSP-PWM mode	TSG3nCMP4E compare match interrupt*1	TSG3nCMP5E compare match interrupt*1	TSG3nCMP6E compare match interrupt*1	TSG3nCMP7E compare match interrupt*1

Note 1. A compare match interrupt is not generated when TSG3nCMP0E < TSG3nCMPmE (m = 1 to 12).

Note 2. A compare match interrupt is not generated when 00000_H ≤ TSG3nCMPmE < TSG3nDTC0, (TSG3nCMP0E + TSG3nDTC0) < TSG3nCMPmE.

Table 25.49 List of Interrupts in Each Mode (3/5)

Operating Mode	INTTSG3nI8	INTTSG3nI9	INTTSG3nI10	INTTSG3nI11
PWM mode	TSG3nCMP8E compare match interrupt*1	TSG3nCMP9E compare match interrupt*1	TSG3nCMP10E compare match interrupt*1	TSG3nCMP11E compare match interrupt*1
HT-PWM mode	TSG3nCMP8E compare match interrupt*2 when incrementing (TSG3nCUF = 0)	TSG3nCMP9E compare match interrupt*2 when decrementing (TSG3nCUF = 1)	TSG3nCMP10E compare match interrupt*2 when incrementing (TSG3nCUF = 0)	TSG3nCMP11E compare match interrupt*2 when decrementing (TSG3nCUF = 1)
SP-PWM mode	—	TSG3nCMP9E compare match interrupt*1	TSG3nCMP10E compare match interrupt*1	—
120-DC mode	TSG3nCMP8E compare match interrupt*1	TSG3nCMP9E compare match interrupt*1	TSG3nCMP10E compare match interrupt*1	TSG3nCMP11E compare match interrupt*1
HSP-PWM mode	TSG3nCMP8E compare match interrupt*1	TSG3nCMP9E compare match interrupt*1	TSG3nCMP10E compare match interrupt*1	TSG3nCMP11E compare match interrupt*1

Note 1. A compare match interrupt is not generated when TSG3nCMP0E < TSG3nCMPmE (m = 1 to 12).

Note 2. A compare match interrupt is not generated when 00000_H ≤ TSG3nCMPmE < TSG3nDTC0, (TSG3nCMP0E + TSG3nDTC0) < TSG3nCMPmE.

Table 25.49 List of Interrupts in Each Mode (4/5)

Operating Mode	INTTSG3nI12	INTTSG3nIPEK	INTTSG3nIVLY
PWM mode	TSG3nCMP12E compare match interrupt*1	Peak interrupt at the same timing with INTTSG3nI0	—
HT-PWM mode	TSG3nCMP12E compare match interrupt*2 when incrementing (TSG3nCUF=0)	Peak interrupt	Valley interrupt
SP-PWM mode	—	Peak interrupt at the same timing with INTTSG3nI0	—
120-DC mode	TSG3nCMP12E compare match interrupt*1	Peak interrupt at the same timing with INTTSG3nI0	—
HSP-PWM mode	TSG3nCMP12E compare match interrupt*1	Peak interrupt at the same timing with INTTSG3nI0	—

Note 1. A compare match interrupt is not generated when TSG3nCMP0E < TSG3nCMPmE (m = 1 to 12).

Note 2. A compare match interrupt is not generated when 00000_H ≤ TSG3nCMPmE < TSG3nDTC0, (TSG3nCMP0E + TSG3nDTC0) < TSG3nCMPmE.

Table 25.49 List of Interrupts in Each Mode (5/5)

Operating Mode	INTTSG3nIER	INTTSG3nIWN
PWM mode	Error interrupt	Warning interrupt
HT-PWM mode	Error interrupt	Warning interrupt
SP-PWM mode	Error interrupt	Warning interrupt
120-DC mode	Error interrupt	Warning interrupt
HSP-PWM mode	Error interrupt	Warning interrupt

25.4.3 Flags

Table 25.50 List of Flags

Number	Flag Name	Symbol	Registers	Operating Mode
(1)	Up count flag	TSG3nCUF	TSG3nSTR0	HT-PWM mode
		TSG3nSUF	TSG3nSTR0	
(2)	Positive phase and inverse phase simultaneous active state detection flag	TSG3nTBF0-TSG3nTBF2	TSG3nSTR2	All operating modes
(3)	Reload request flag	TSG3nRSF	TSG3nSTR0	All operating modes
(4)	Noise Detection Flag	TSG3nNDF	TSG3nSTR2	All operating modes
(5)	Pattern order detection flag	TSG3nTSF	TSG3nSTR1	All operating modes
(6)	Pattern error detection flag	TSG3nPEF	TSG3nSTR2	All operating modes
(7)	Pattern reversal detection flag	TSG3nPRF	TSG3nSTR2	All operating modes
(8)	TSG3nPTSI2 to TSG3nPTSI0 pin abnormal toggle detection flag	TSG3nPTF	TSG3nSTR2	All operating modes
(9)	TSG3nOPCI0 and TSG3nOPCI1 signal simultaneous trigger detection flag	TSG3nTDF	TSG3nSTR2	All operating modes
(10)	Pattern phase difference detection flag	TSG3nPPF	TSG3nSTR2	All operating modes
(11)	Timer output pattern flag	TSG3nOPF0 to TSG3nOPF2	TSG3nSTR1	All operating modes
(12)	Pattern switch detection signal (internal signal)	TSG3nPTE	—	All operating modes

25.4.3.1 Up Count Flag (TSG3nCUF and TSG3nSUF)

Name

Up count flag (TSG3nSTR0.TSG3nCUF and TSG3nSUF)

Description

There are following two up count flags.

TSG3nCUF is an up/down count flag of the 18-bit counter.

TSG3nSUF is an up/down count flag of the 18-bit sub-counter.

For both TSG3nCUF and TSG3nSUF, 0 means increment, and 1 means decrement.

TSG3nCUF and TSG3nSUF can be used only in HT-PWM mode.

Example of operation

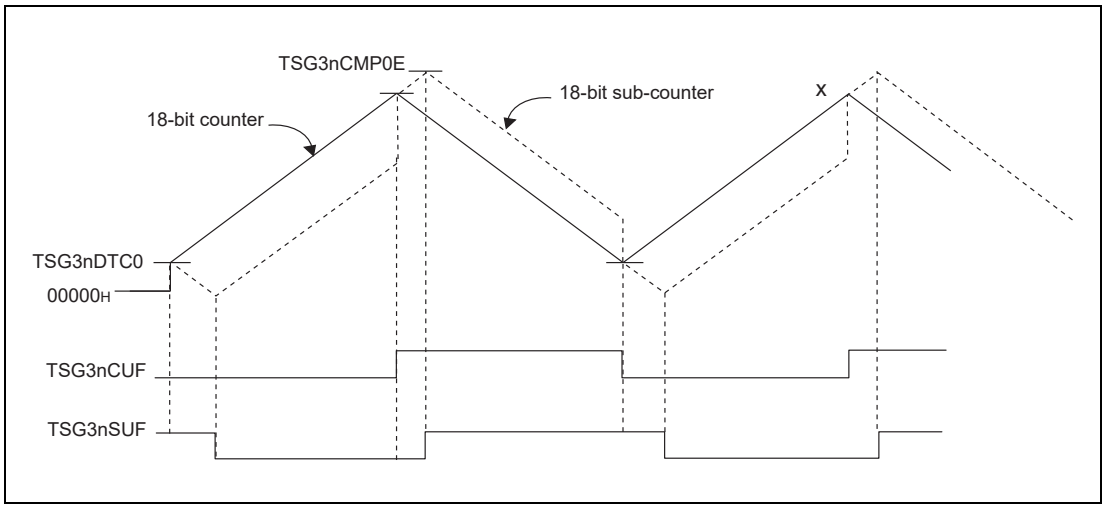

Figure 25.17 Example of Up count flag operation

NOTES

1. TSG3nCUF value is:
   0 (up count) when TSG3nDTC0 ≤ 18-bit counter ≤ (TSG3nCMP0E + TSG3nDTC0-2)
   1 (down count) when (TSG3nCMP0E + TSG3nDTC0) ≥ 18-bit counter ≥ TSG3nDTC0 + 2
2. TSG3nSUF value is:
   0 (up count) when 0 ≤ 18-bit sub-counter ≤ (TSG3nCMP0E + TSG3nDTC0 + TSG3nDTC1-2)
   1 (down count) when (TSG3nCMP0E + TSG3nDTC0 + TSG3nDTC1) ≥ 18-bit sub-counter ≥ 2

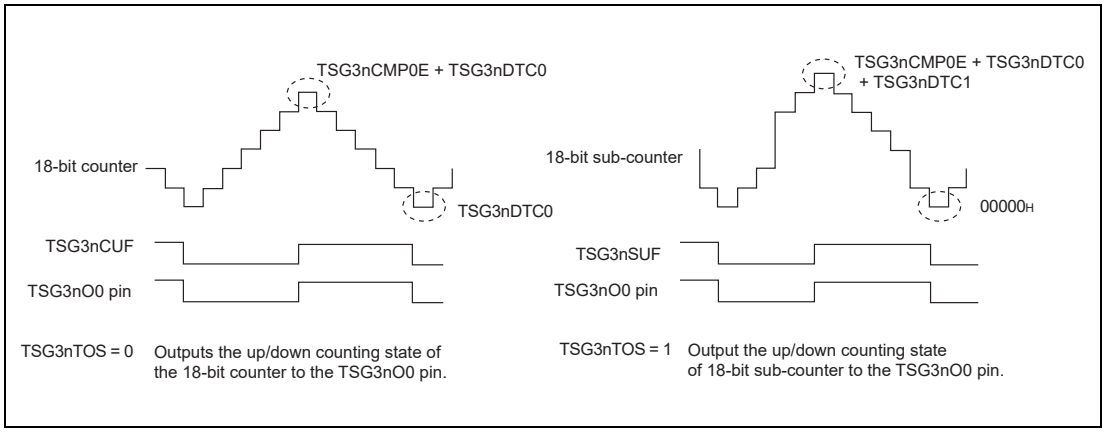

Figure 25.18 TSG3nO0 Pin Output depending onTSG3nIOC1.TSG3nTOS Setting

Operating Mode

TSG3nCUF and TSG3nSUF can be used only in HT-PWM mode.

25.4.3.2 Positive Phase and Inverse Phase Simultaneous Active State Detection Flag (TSG3nTBF0 to TSG3nTBF2)

Name

Positive phase and inverse phase simultaneous active state detection flag (TSG3nSTR2.TSG3nTBF0 to TSG3nTBF2 flags)

Description

When any of TSG3nCTL1.TSG3nTBA2 to TSG3nTBA0 is 1, TSG3nTBF0 to TSG3nTBF2 can detect the simultaneous active state of the positive phase and inverse phase of TSG3n.

When the simultaneous active state of the positive phase and inverse phase of the TSG3n is detected, the corresponding TSG3nTBF0 to TSG3nTBF2 flags are set to 1, and an error interrupt (INTTSG3nIER) is generated. The flags are cleared when 1 is written to TSG3nSTC.TSG3nTBR0 to TSG3nTBR2, respectively.

Example of operation

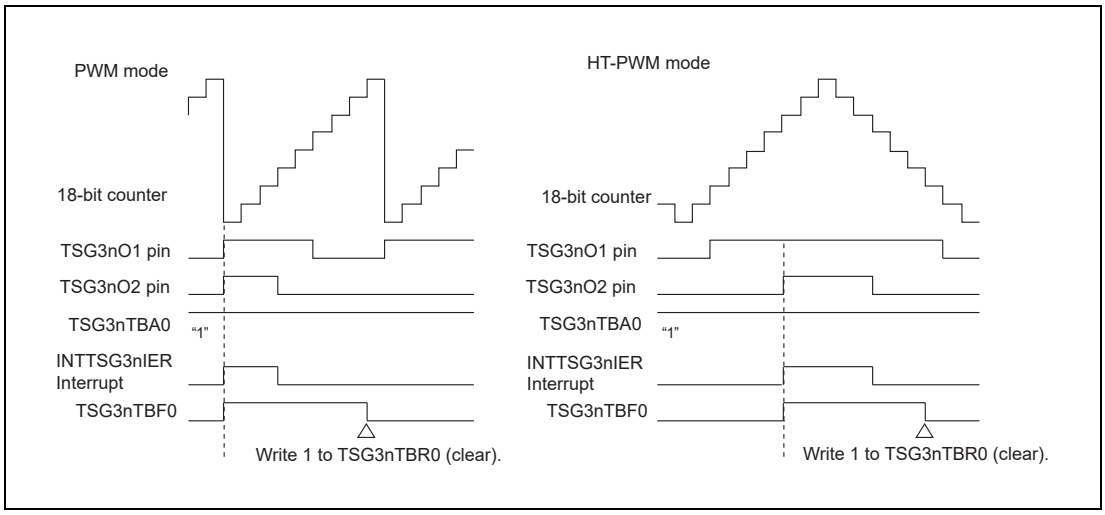

Figure 25.19 Example of Positive Phase and Inverse Phase Simultaneous Active State Detection Flag Operation

Operating Mode

Available in all operating modes.

CAUTION

TSG3nTBF0 to TSG3nTBF2 are valid only when TSG3nCTL1.TSG3nTBA0 to TSG3nTBA2 = 1 and TSG3nSTR0.TSG3nTE = 1.

25.4.3.3 Reload Request Flag (TSG3nRSF)

Name

Reload request flag (TSG3nSTR0.TSG3nRSF)

Description

TSG3nRSF is set to 1 when a reload request is generated (when a value is written to TSG3nCMP1E (TSG3nCMP1, TSG3nCMP1W, TSG3nCMPUE, TSG3nCMPU, TSG3nUPWE, TSG3nUPW, and TSG3nHSPCMUE)), and cleared to 0 when the value is transferred to all the buffer registers.

Example of operation

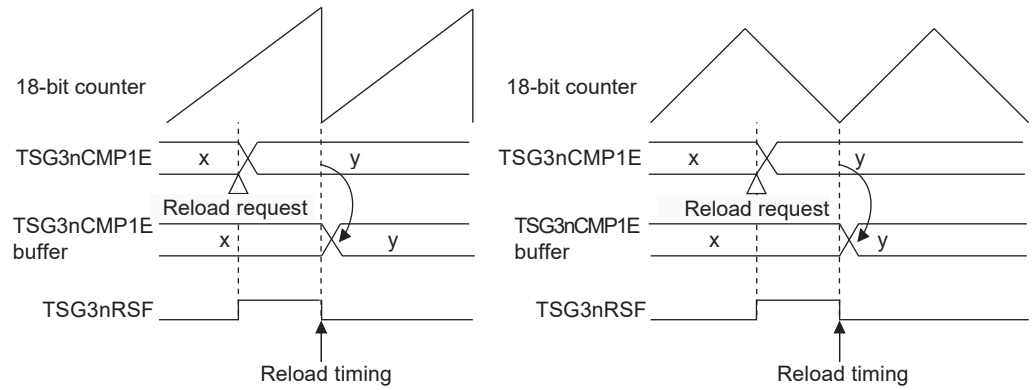

Figure 25.20 Example of reload REquest Flag Operation

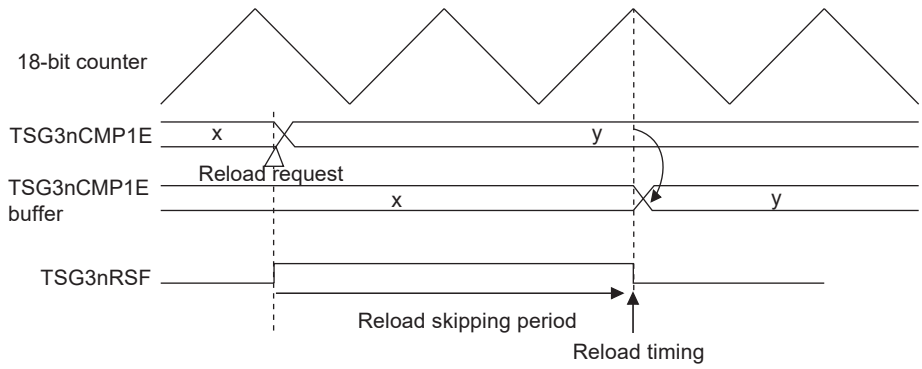

Figure 25.21 Reload Request Flag and Reload Skipping Period

Operating Mode

Available in all operating modes.

25.4.3.4 Noise Detection Flag (TSG3nNDF)

Name

Noise detection flag (TSG3nSTR2.TSG3nNDF)

Description

TSG3nNDF can detect that two or more pins of TSG3nPTSI2 to TSG3nPTSI0 have changed simultaneously (a noise is generated).

TSG3nNDF is set to 1 when two or more pins of TSG3nPTSI2 to TSG3nPTSI0 have changed simultaneously (a noise is generated), and a warning interrupt (INTTSG3nIWN) is generated. The TSG3nNDF flag is cleared to 0 when 1 is written to the TSG3nSTC.TSG3nNDR bit.

Example of operation

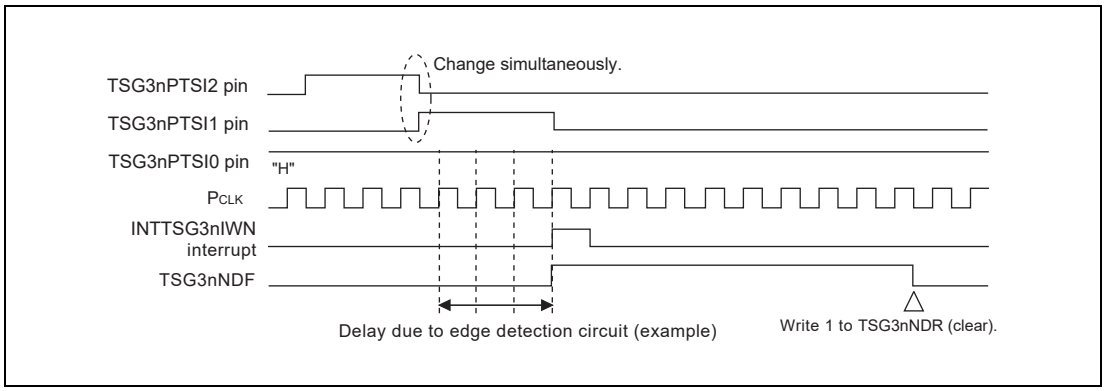

Figure 25.22 Example of Noise Detection Flag Operation

Operation mode

Available in all operating modes.

CAUTION

TSG3nNDF is valid only when TSG3nCTL1.TSG3nNDC = 1 and TSG3nSTR0.TSG3nTE = 1.

25.4.3.5 Pattern Order Detection Flag (TSG3nTSF)

Name

Pattern order detection flag (TSG3nSTR1.TSG3nTSF)

Description

TSG3nTSF can detect the order of patterns input to the TSG3nPTSI2 to TSG3nPTSI0 pins.

TSG3nTSF is set depending on the values input to the TSG3nPTSI2 to TSG3nPTSI0 pins as shown in the table below

Table 25.51 Pattern Order Detection Flag and Pattern Input Order

TSG3nTSF	Values input to TSG3nPTSI2 to TSG3nPTSI0 Pins
0	[1,0,1] → [1,0,0] → [1,1,0] → [0,1,0] → [0,1,1] → [0,0,1]
1	[1,0,1] ← [1,0,0] ← [1,1,0] ← [0,1,0] ← [0,1,1] ← [0,0,1]

Example of operation

(a) When Normal Input to TSG3nPTSI2 to TSG3nPTSI0 Pins is Detected

As shown in **Figure 25.23**, if the TSG3nPTSI2 to TSG3nPTSI0 pins change in the normal order, 0 or 1 is set according to the change order at the change timing.

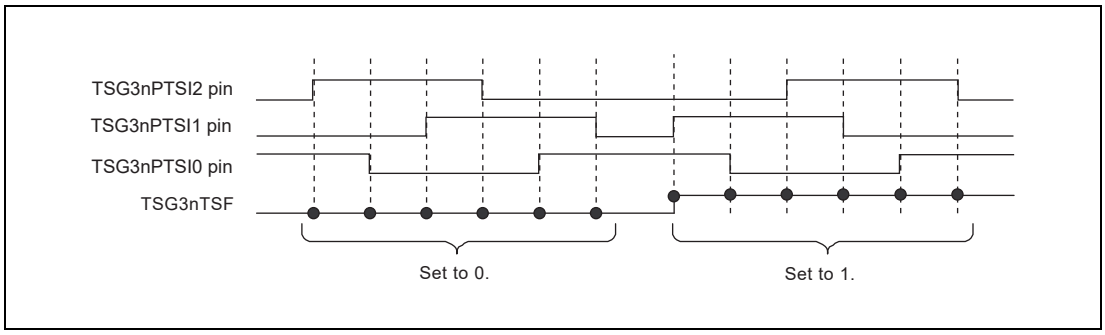

Figure 25.23 Example of Pattern Order Detection Flag Operation (Normal Operation)

(b) Detection of Input Pattern Order

Immediately after TSG3n starts operation, the rotation direction cannot be determined. Therefore, TSG3nTSF cannot detect the change (normal or reverse rotation) in the patterns input to the TSG3nPTSI2 to TSG3nPTSI0 pins. To enable detection of change immediately after the beginning of operation, TSG3nPSC should be set before operation starts (when TSG3nTE = 0, the TSG3nPSC value is reflected).

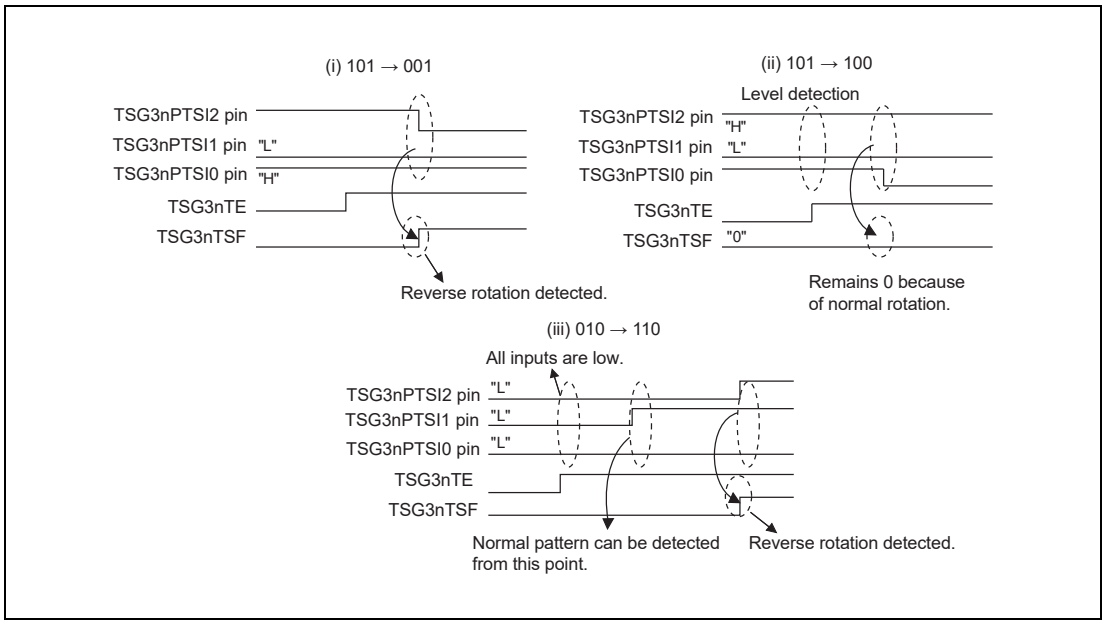

Figure 25.24 Example of Detecting Change (Normal/Reverse Rotation) in Pattern Input to TSG3nPTSI2 to TSG3nPTSI0 Pins

(c) When Abnormal Input to TSG3nPTSI2 to TSG3nPTSI0 Pins is Detected

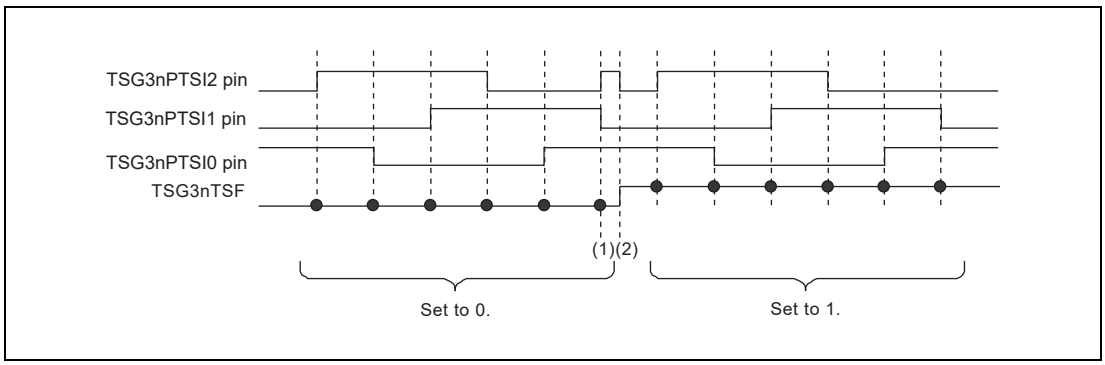

Figure 25.25 Example of Operation when Values Input to Two Pins of TSG3nPTSI2 to TSG3nPTSI0 Change (Abnormal Operation)

(1) TSG3nTSF does not change at this point because it expects the input pattern change to {0, 1, 0} or {0, 0, 1} (if values of two pins change, TSG3nTSF does not change).

(2) TSG3nPTSI2 to TSG3nPTSI0 pins are determined to have been changed from {1, 0, 1} to {0, 0,1}, and TSG3nTSF is set to 1.

Operation mode

Available in all operating modes.

25.4.3.6 Pattern Error Detection Flag (TSG3nPEF)

Name

Pattern error detection flag (TSG3nSTR2.TSG3nPEF)

Description

TSG3nPEF can detect that 000 or 111 is input to the TSG3nPTSI2 to TSG3nPTSI0 pins.

TSG3nPEF is set to 1 when the levels of the TSG3nPTSI2 to TSG3nPTSI0 pins are 111 or 000, and a warning interrupt (INTTSG3nIWN) is generated. TSG3nPEF is cleared to 0 when 1 is written to TSG3nSTC.TSG3nPER.

Example of operation

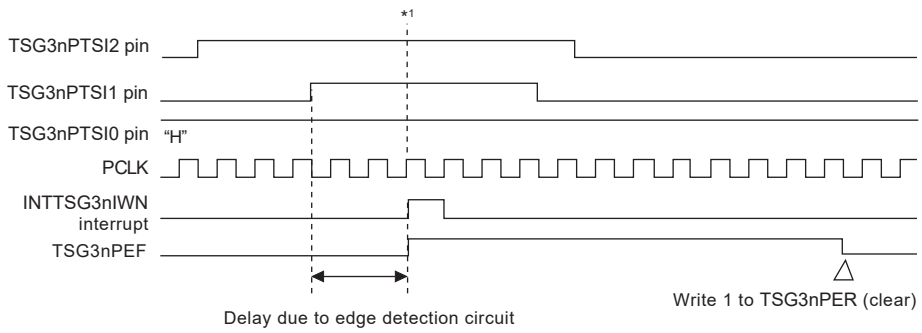

Note 1. 111 is detected

Figure 25.26 Example of Pattern Error Detection Flag Operation (TSG3nPTSI2 to TSG3nPTSI0 Pins = 111)

Operation mode

Available in all operating modes.

CAUTIONS

TSG3nPEF is valid only when TSG3nCTL1.TSG3nPEC = 1 and TSG3nSTR0.TSG3nTE = 1.

25.4.3.7 Pattern Reversal Detection Flag (TSG3nPRF)

Name

Pattern reversal detection flag (TSG3nSTR2.TSG3nPRF)

Description

TSG3nPRF can detect that the pattern change order of the TSG3nPTSI2 to TSG3nPTSI0 pins have been reversed.

TSG3nPRF is set to 1 when the pattern order detection flag (TSG3nTSF) changes, and a warning interrupt (INTTSG3nIWN) is generated. However, immediately after TSG3nSTR0.TSG3nTE is set to 1, TSG3nPRF is valid at the timing of the second and subsequent change in TSG3nPTSI2 to TSG3nPTSI0 pins.

TSG3nPRF is cleared to 0 when 1 is written to the TSG3nSTC.TSG3nPRR bit.

Example of operation

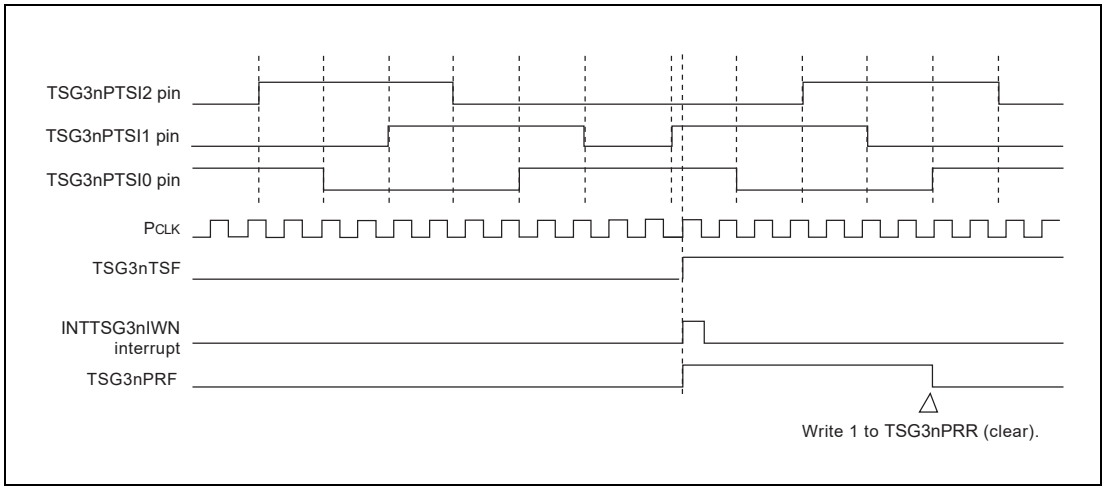

Figure 25.27 Example of Pattern Reversal Detection Flag Operation

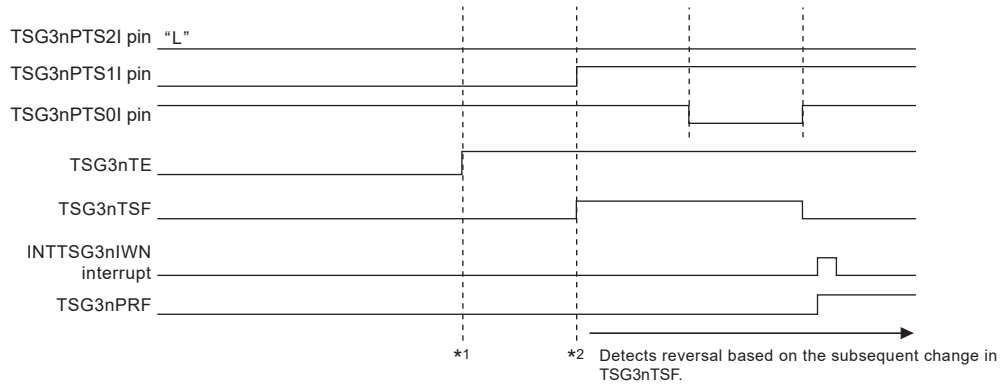

Note 1. Operation starts.

Note 2. If TSG3nTSF is set to 1 by the first change in the TSG3nPTSI2 to TSG3nPTSI0 pins immediately after TSG3nTE is set to 1, reversal is not detected.

Figure 25.28 Example of Operation immediately after TSG3nTE Flag in TSG3nSTR0 is Set to 1

Operation mode

Available in all operating modes.

CAUTION

TSG3nPRF is valid only when TSG3nCTL1.TSG3nPRC = 1 and TSG3nSTR0.TSG3nTE = 1.

25.4.3.8 TSG3nPTSI2 to TSG3nPTSI0 Pin Abnormal Toggle Detection Flag (TSG3nPTF)

Name

TSG3nPTSI2 to TSG3nPTSI0 pin abnormal toggle detection flag (TSG3nSTR2.TSG3nPTF)

Description

TSG3nPTF can detect that the values of the TSG3nPTSI2 to TSG3nPTSI0 pins change three or more times during the TSG3nOPCI0 or TSG3nOPCI1 signal trigger.

TSG3nPTF is set to 1 when the third trigger of TSG3nOPCI0 or TSG3nOPCI1 signal occurs simultaneously with the change in TSG3nPTSI2 to TSG3nPTSI0, and a warning interrupt (INTTSG3nIWN) is generated.

TSG3nPTF is cleared to 0 when 1 is written to TSG3nSTC.TSG3nPTR.

Example of operation

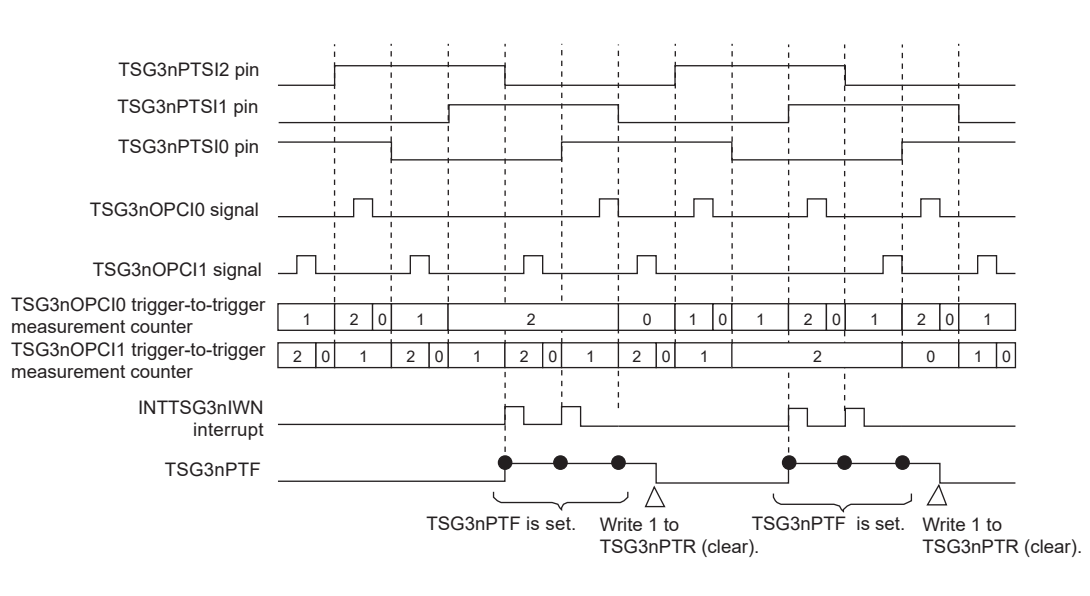

Figure 25.29 Operation of TSG3nPTSI2 to TSG3nPTSI0 Pin Abnormal Toggle Detection Flag Operation

Operating mode

Available in all operating modes.

NOTES

1. TSG3nPTF is valid only when TSG3nCTL1.TSG3nPTC1 bit = 1 and TSG3nSTR0.TSG3nTE = 1.
2. When TSG3nPTC0 bit = 1 and TSG3nPTC1 bit = 1, TSG3nO1 to TSG3nO6 pin output switch control is automatically switched to pattern switch method (TSG3nOPT0.TSG3nPOT bit = 0) if an abnormal toggle is detected.

25.4.3.9 TSG3nOPCI0 and TSG3nOPCI1 Signal Simultaneous Trigger Detection Flag (TSG3nTDF)

Name

TSG3nOPCI0 and TSG3nOPCI1 signal simultaneous trigger detection flag (TSG3nSTR2.TSG3nTDF)

Description

TSG3nTDF can detect that TSG3nOPCI0 and TSG3nOPCI1 signals are generated simultaneously.

TSG3nTDF is set to 1 when the TSG3nOPCI0 and TSG3nOPCI1 signals are generated simultaneously, and a warning interrupt (INTTSG3nIWN) is generated. TSG3nTDF is cleared to 0 when 1 is written to TSG3nSTC.TSG3nTDR.

Example of operation

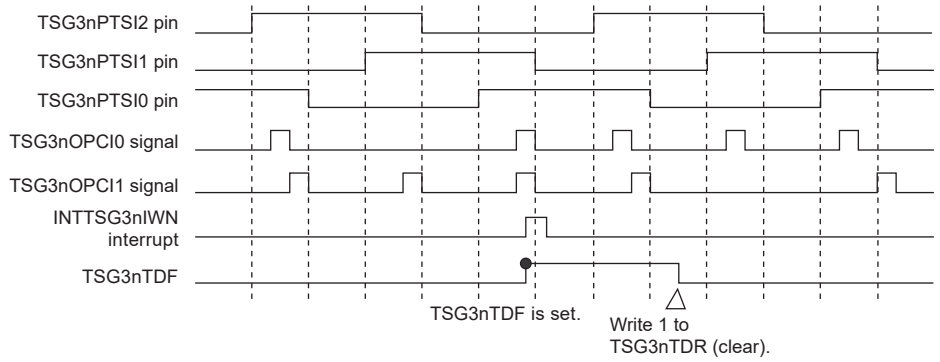

Figure 25.30 Operation of TSG3nOPCI0 and TSG3nOPCI1 Pin Abnormal Toggle Detection Flag Operation

Operating mode

Available in all operating modes.

CAUTION

TSG3nTDF is valid only when TSG3nCTL1.TSG3nTDC = 1 and TSG3nSTR0.TSG3nTE = 1.

25.4.3.10 Pattern Phase Difference Detection Flag (TSG3nPPF)

Name

Pattern phase difference detection flag (TSG3nSTR2.TSG3nPPF)

Description

TSG3nPPF can detect the phase difference between the input pattern (TSG3nPTSI2 to TSG3nPTSI0 pins) and the output pattern (TSG3nSTR1.TSG3nOPF2 to TSG3nOPF0 flags).

TSG3nPPF is set to 1 when the pattern phase difference is detected when the TSG3nOPCI0 and TSG3nOPCI1 signal triggers are input, and a warning interrupt (INTTSG3nIWN) is generated. TSG3nPPF remains 1 until it is cleared to 0 when 1 is written to TSG3nSTC.TSG3nPPR by software. When the phase difference is detected, TSG3nPPF is set at each operation clock cycle (PCLK). TSG3nPPF should be cleared to 0 when no phase difference occurs.

Table 25.52 Correspondence between Normal Input Patterns and Output Patterns

TSG3nPTSI2 to TSG3nPTSI0 pins (input)	“1,0,1”	“1,0,0”	“1,1,0”	“0,1,0”	“0,1,1”	“0,0,1”
TSG3nOPF2 to TSG3nOPF0 flags (output)	“0,0,1” “1,0,1” “1,0,0”	“1,0,1” “1,0,0” “1,1,0”	“1,0,0” “1,1,0” “0,1,0”	“1,1,0” “0,1,0” “0,1,1”	“0,1,0” “0,1,1” “0,0,1”	“0,1,1” “0,0,1” “1,0,1”

Example of operation

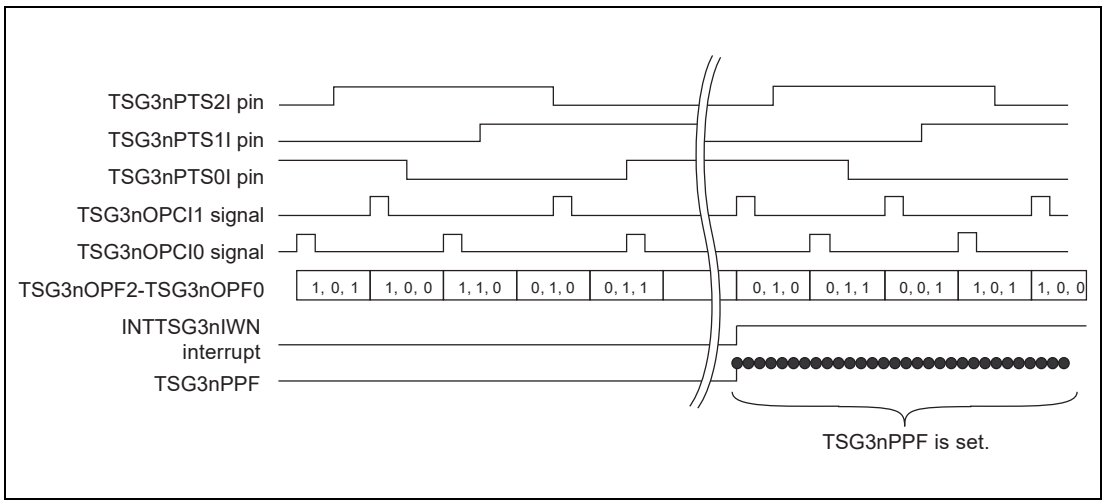

Figure 25.31 Example of Pattern Difference Detection Flag Operation

Operating mode

Available in all operating modes.

CAUTIONS

1. **TSG3nPPF is valid only when TSG3nCTL1.TSG3nPPC = 1 and TSG3nSTR0.TSG3nTE = 1.**
2. **When 000 or 111 is input to the TSG3nPTSI2 to TSG3nPTSI0 pins, or when TSG3nOPF2 to TSG3nOPF0 are set to 000 or 111, TSG3nPPF is not set.**

25.4.3.11 Timer Output Pattern Flag (TSG3nOPF2-TSG3nOPF0)

Name

Timer output pattern flag (TSG3nSTR1.TSG3nOPF2 to TSG3nOPF0)

Description

TSG3nOPF2 to TSG3nOPF0 flags indicate the timer output patterns.

For details, see **Section 25.4.7.4, 120-DC Mode**, and **Section 25.4.7.8, Software Output Control Function**.

Operating mode

Available in all operating modes.

25.4.3.12 Pattern Switch Detection Signal (TSG3nPTE)

Name

Pattern switch detection signal (TSG3nPTE signal)

Description

The TSG3nPTE signal toggles when the input pattern (TSG3nPTSI2 to TSG3nPTSI0 pins) changes.

The toggle pattern is determined by the TSG3nPSC bit (TSG3nOPT0.TSG3nPSS = 1).

Table 25.53 Change Timing of Pattern Switch Detection Signal (1/2)

- TSG3nPSC = 0

		TSG3nPTSI2-TSG3nPTSI0 Pins after Change							
		000	111	101	100	110	010	011	001
Current TSG3nPTSI2 to TSG3nPTSI0 pins	000	—	—	—	—	—	—	—	—
	111	—	—	—	—	—	—	—	—
	101	—	—	—	Toggle	—	—	—	—
	100	—	—	—	—	Toggle	—	—	—
	110	—	—	—	—	—	Toggle	—	—
	010	—	—	—	—	—	—	Toggle	—
	011	—	—	—	—	—	—	—	Toggle
	001	—	—	Toggle	—	—	—	—	—

Table 25.53 Change Timing of Pattern Switch Detection Signal (2/2)

- TSG3nPSC = 1

		TSG3nPTSI2-TSG3nPTSI0 Pins after Change							
		000	111	101	100	110	010	011	001
Current TSG3nPTSI2 to TSG3nPTSI0 pins	000	—	—	—	—	—	—	—	—
	111	—	—	—	—	—	—	—	—
	101	—	—	—	—	—	—	—	Toggle
	100	—	—	Toggle	—	—	—	—	—
	110	—	—	—	Toggle	—	—	—	—
	010	—	—	—	—	Toggle	—	—	—
	011	—	—	—	—	—	Toggle	—	—
	001	—	—	—	—	—	—	Toggle	—

Example of operation

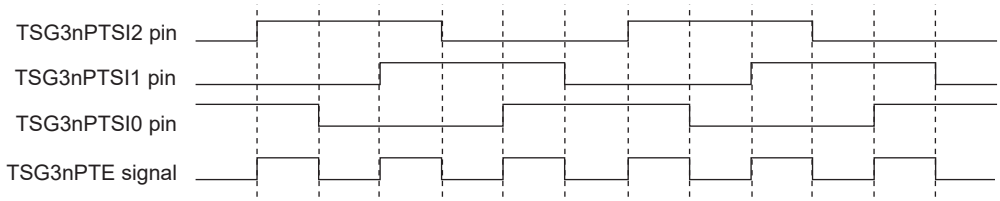

Figure 25.32 Example of Pattern Switch Detection Signal Operation

Operating mode

Available in all operating modes.

CAUTION

The TSG3nPTE signal is valid only when TSG3nIOC1.TSG3nPTS = 1 and TSG3nSTR0.TSG3nTE = 1.

25.4.4 Interrupt Skipping Function

Operation related to the interrupt skipping function is described below.

- Peak interrupts (INTTSG3nIPEK) and valley interrupts (INTTSG3nIVLY) can be skipped.
- TSG3nCTL4.TSG3nPIE enables outputting of the INTTSG3nIPEK interrupt and specifies whether to skip the interrupts.
- TSG3nCTL4.TSG3nVIE enables outputting of the INTTSG3nIVLY interrupt and specifies whether to skip the interrupts.

When TSG3nCTL3.TSG3nRIA is set to 1 (with reload skipping), reload is executed at the same timing as the interrupt after being skipped.

When TSG3nCTL3.TSG3nRIA is set to 0 (without reload skipping), reload is executed at the specified reload timing regardless of interrupt skipping.

CAUTION

When a value is written to TSG3nCTL4, and TSG3nRCC04 to TSG3nRCC00 are transferred to the buffer register, the interrupt skipping counter is cleared. Therefore, when the interrupt skipping function is used, interrupt interval may be long temporarily. To avoid this, the interrupt skipping count should be changed with the reload timing being set to the interrupts skipped (TSG3nCTL3.TSG3nRIA = 1).

25.4.4.1 Operation of Interrupt Skipping Function

Timing diagram of interrupt skipping function in various conditions are shown in the following figures.

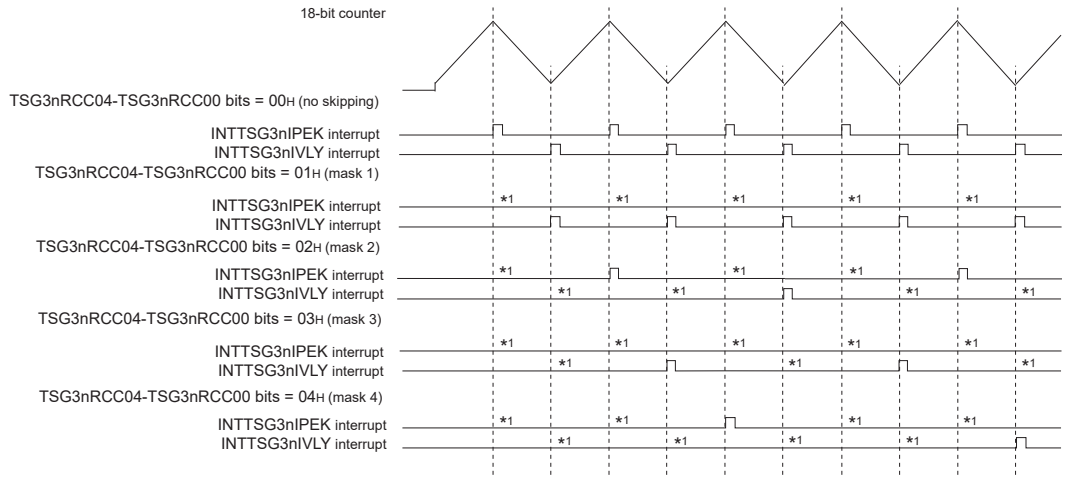

Note 1. Skipped interrupt request

Figure 25.33 Interrupt Skipping Operation when TSG3nPIE = 1 and TSG3nVIE = 1 in TSG3nCTL4 (Peak and Valley Interrupt Generation in HT-PWM Mode)

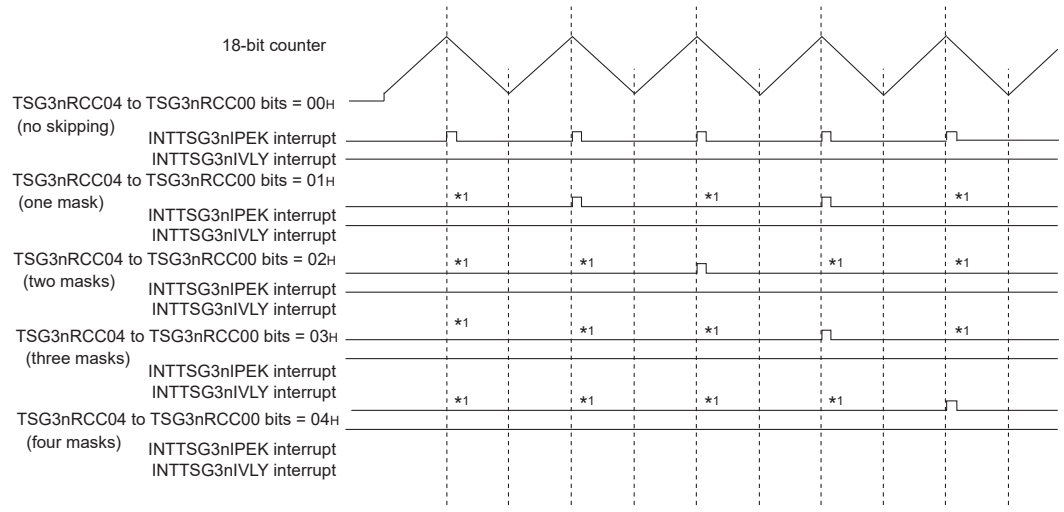

Note 1. Skipped interrupt request

Figure 25.34 Interrupt Skipping Operation when TSG3nPIE = 1 and TSG3nVIE = 0 in TSG3nCTL4 Register (only Peak Interrupt Generation in HT-PWM Mode)

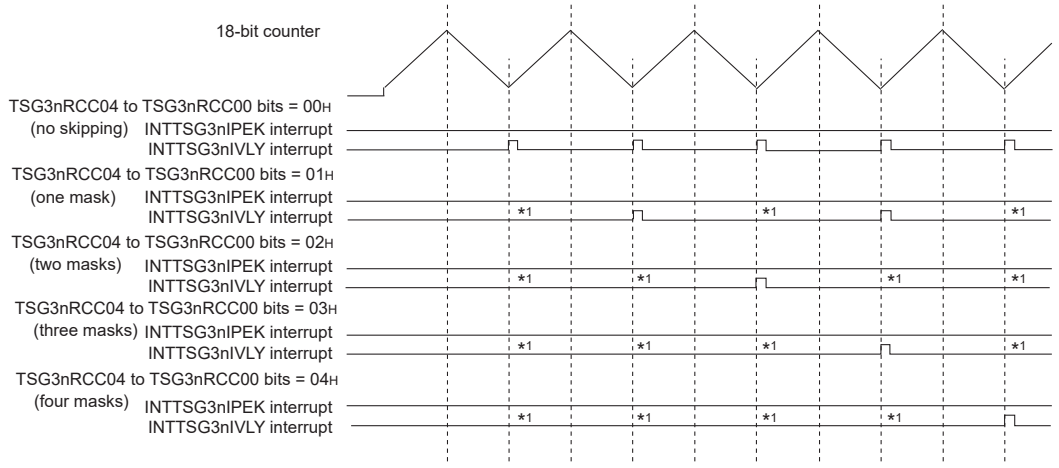

Note 1. Skipped interrupt request

Figure 25.35 Interrupt Skipping Operation when TSG3nPIE = 0 and TSG3nVIE = 1 in TSG3nCTL4 Register (only Valley Interrupt Generation in HT-PWM Mode)

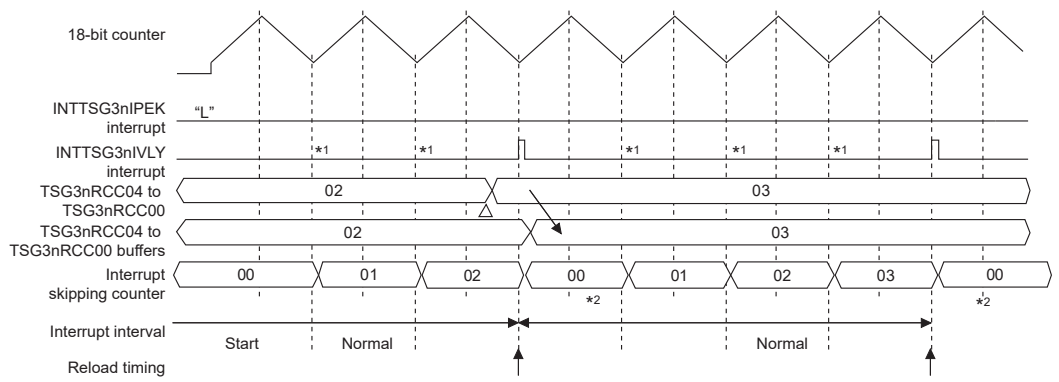

Note 1. Skipped interrupt request

Note 2. Interrupt skipping counter is cleared

Figure 25.36 When TSG3nRMC = 0, TSG3nRIA = 1 in TSG3nCTL3 (with Reload Skipping)

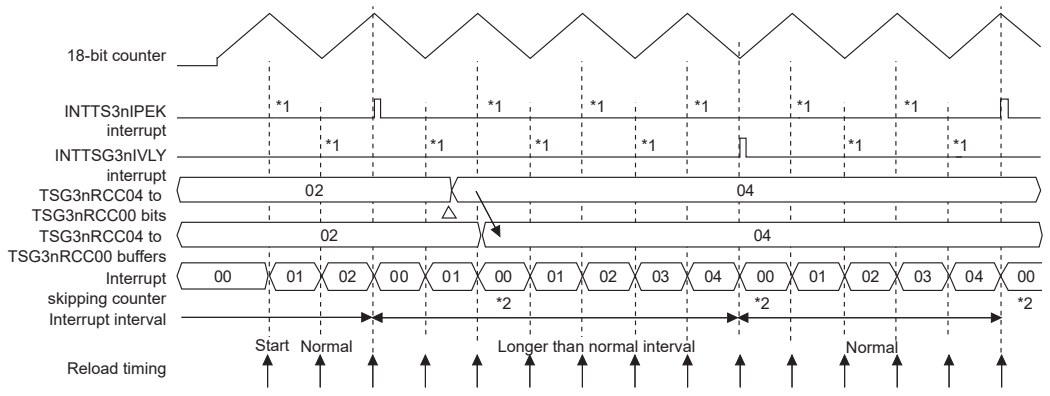

Note 1. Skipped interrupt request

Note 2. Interrupt skipping counter is cleared

Figure 25.37 When TSG3nRMC = 0, TSG3nRIA = 0 in TSG3nCTL3 (without Reload Skipping)

CAUTION

Interrupt interval might be longer.

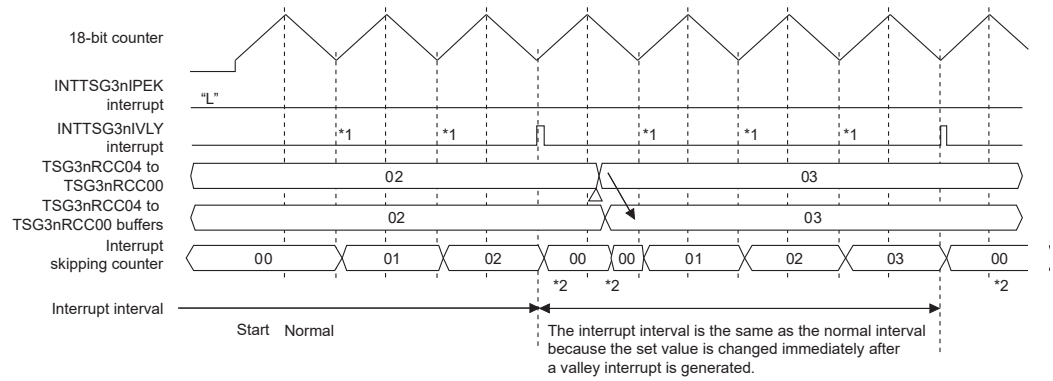

Note 1. Skipped interrupt request

Note 2. Interrupt skipping counter is cleared

Figure 25.38 When TSG3nRMC = 1 in TSG3nCTL3 (Anytime Rewrite Mode)

NOTE

After rewriting, the value is reflected immediately regardless of the reload timing. The interrupt skipping counter is cleared when the value is transferred to the TSG3nRCC04 to TSG3nRCC00 buffers, not when the pertinent register is rewritten.

25.4.4.2 Example of Operation when Peak Interrupt is Generated (in PWM Mode)

Operation related to the interrupt skipping function in PWM mode is described below.

- Peak interrupts (INTTSG3nIPEK) can be skipped. In PWM mode, it is generated by compare match of TSG3nCMP0E buffer register and 18-bit counter.
- TSG3nCTL4.TSG3nPIE enables outputting of the INTTSG3nIPEK interrupt and specifies whether to skip the interrupts.
- The setting of TSG3nCTL4.TSG3nVIE is disabled. At this time, the INTTSG3nIVLY interrupt is not generated.
  When TSG3nCTL3.TSG3nRIA is set to 1 (with reload skipping), reload is executed at the same timing as the interrupt after being skipped.

CAUTION

When a value is written to TSG3nCTL4, and TSG3nRCC04 to TSG3nRCC00 are transferred to the buffer register, the interrupt skipping counter is cleared. Therefore, when the interrupt skipping function is used, interrupt interval may be long temporarily. To avoid this, the interrupt skipping count should be changed with the reload timing being set to the interrupts skipped (TSG3nCTL3.TSG3nRIA = 1).

(1) Example of operation

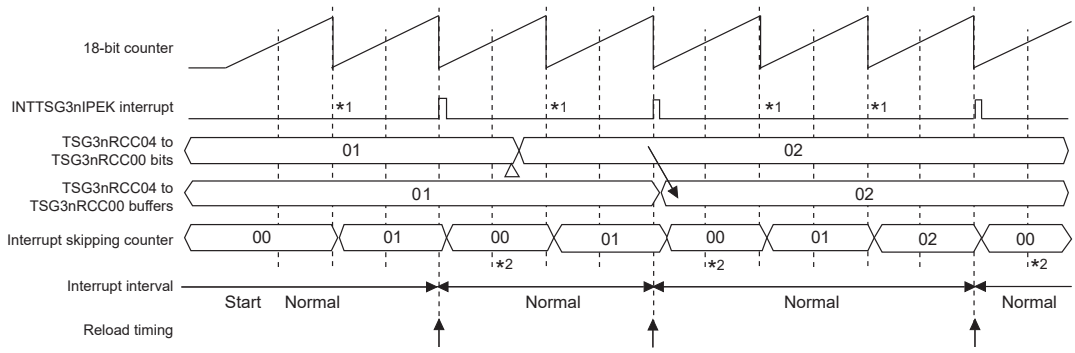

Note 1. Skipped interrupt request
Note 2. Interrupt skipping counter is cleared.

Figure 25.39 When TSG3nCTL3.TSG3nRMC = 0, TSG3nRIA = 1, TSG3nCTL4.TSG3nPRE = 1 (Recommended Setting)

NOTE

When TSG3nCTL3.TSG3nRIA = 1, reload is executed at the same timing as the interrupt after being skipped.

25.4.5 A/D Conversion Trigger Function

A/D conversion trigger operation is described below.

The TSG3nDCMP0E, TSG3nDCMP1E, and TSG3nDCMP2E registers are used as compare registers of the A/D conversion trigger function.

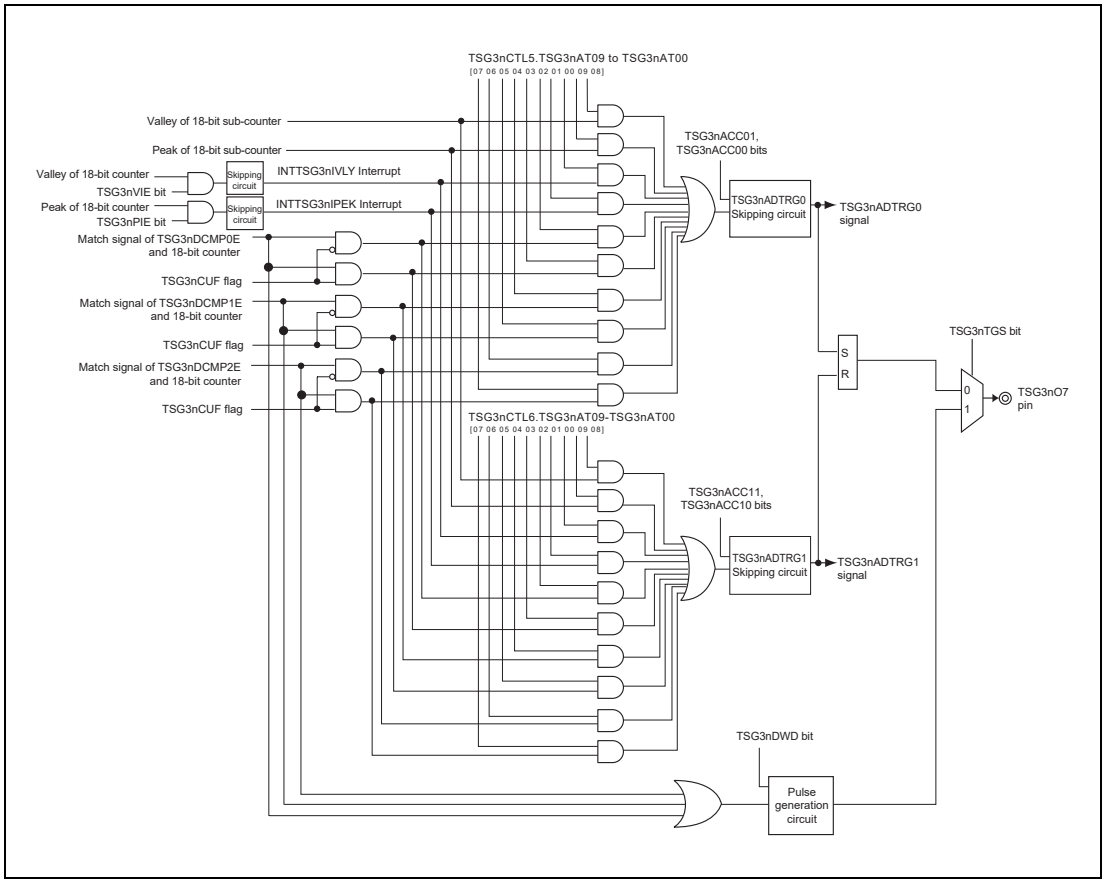

Figure 25.40 A/D Conversion Trigger and Diagnostic Output Control Circuit

As shown in **Figure 25.40**, a logical ORed signal can be generated by selecting the compare match of TSG3nDCMP0E to TSG3nDCMP2E with the 18-bit counter, a peak interrupt (INTTSG3nIPEK) and a valley interrupt (INTTSG3nIVLY) of the 18-bit counter, the peak timing of 18-bit sub-counter, and the valley timing of 18-bit sub-counter.

TSG3n has two channels of the identical A/D conversion trigger control circuits, which can be controlled independently. TSG3n also provides the A/D conversion trigger skipping function with the skipping rate of 1/1, 1/2, 1/4, or 1/8.

25.4.5.1 Operation of A/D Conversion Trigger

TSG3n has a function to generate A/D conversion start triggers (TSG3nADTRG0 and TSG3nADTRG1 signals) by selecting any of ten trigger sources as required. The trigger sources are selected by TSG3nAT09 to TSG3nAT00 in TSG3nCTL5 and TSG3nAT19 to TSG3nAT10 in TSG3nCTL6.

(1) TSG3nADTRG0/TSG3nADTRG1 Signal Output Control (TSG3nCTL5 and TSG3nCTL6)

[Trigger sources]

- TSG3nAT00/TSG3nAT10 = 1 : A valley interrupt (INTTSG3nIVLY) causes an A/D conversion trigger pulse to be generated.
- TSG3nAT01/TSG3nAT11 = 1 : A peak interrupt (INTTSG3nIPEK) causes an A/D conversion trigger pulse to be generated.
- TSG3nAT02/TSG3nAT12 = 1 : While the 18-bit counter is counting up, a TSG3nDCMP0E compare match enables A/D conversion trigger to be generated.
- TSG3nAT03/TSG3nAT13 = 1 : While the 18-bit counter is counting down, a TSG3nDCMP0E compare match enables A/D conversion trigger to be generated.
- TSG3nAT04/TSG3nAT14 = 1 : While the 18-bit counter is counting up, a TSG3nDCMP1E compare match enables A/D conversion trigger to be generated.
- TSG3nAT05/TSG3nAT15 = 1 : While the 18-bit counter is counting down, a TSG3nDCMP1E compare match enables A/D conversion trigger to be generated.
- TSG3nAT06/TSG3nAT16 = 1 : While the 18-bit counter is counting up, a TSG3nDCMP2E compare match enables A/D conversion trigger to be generated.
- TSG3nAT07/TSG3nAT17 = 1 : While the 18-bit counter is counting down, a TSG3nDCMP2E compare match enables A/D conversion trigger to be generated.
- TSG3nAT08/TSG3nAT18 = 1 : A valley timing of the 18-bit sub-counter (at a switch from decrementing to incrementing) enables A/D conversion trigger to be generated.
- TSG3nAT09/TSG3nAT19 = 1 : A peak timing of 18-bit sub-counter (at a switch from incrementing to decrementing) enables A/D conversion trigger to be generated.

[Skipping setting]

- TSG3nACC01, TSG3nACC00 and TSG3nACC11, TSG3nACC10 :
  Set the skipping rate of TSG3nADTRG0/TSG3nADTRG1

All A/D conversion triggers selected by TSG3nAT09 to TSG3nAT00 and TSG3nAT19 to TSG3nAT10 are logically ORed, and the resultant signals are subjected to skipping control specified by TSG3nACC01 and TSG3nACC00, and TSG3nACC11 and TSG3nACC10, and then the TSG3nADTRG0 and TSG3nADTRG1 signals are generated.

A peak interrupt (INTTSG3nIPEK) and a valley interrupt (INTTSG3nIVLY) selected by TSG3nAT00 and TSG3nAT01, and TSG3nAT10 and TSG3nAT11 are interrupt signals obtained after skipped. Therefore, they are output at the timing according to interrupt skipping control. If the interrupt output is not enabled by TSG3nCTL4.TSG3nPIE and TSG3nVIE, A/D conversion trigger is not output.

TSG3nACC01, TSG3nACC00, and TSG3nAT09 to TSG3nAT00, and TSG3nACC11, TSG3nACC10, and TSG3nAT19 to TSG3nAT10 can be rewritten during timer operation.

If A/D conversion trigger setting bits are rewritten during operation, the rewritten values are reflected on the A/D conversion trigger output status immediately. Such control bits are rewritten at anytime regardless of operating modes. If a write access is made to TSG3nCTL5 and TSG3nCTL6 (including a rewrite of the same value), the A/D conversion trigger skipping counter is cleared and starts counting from zero.

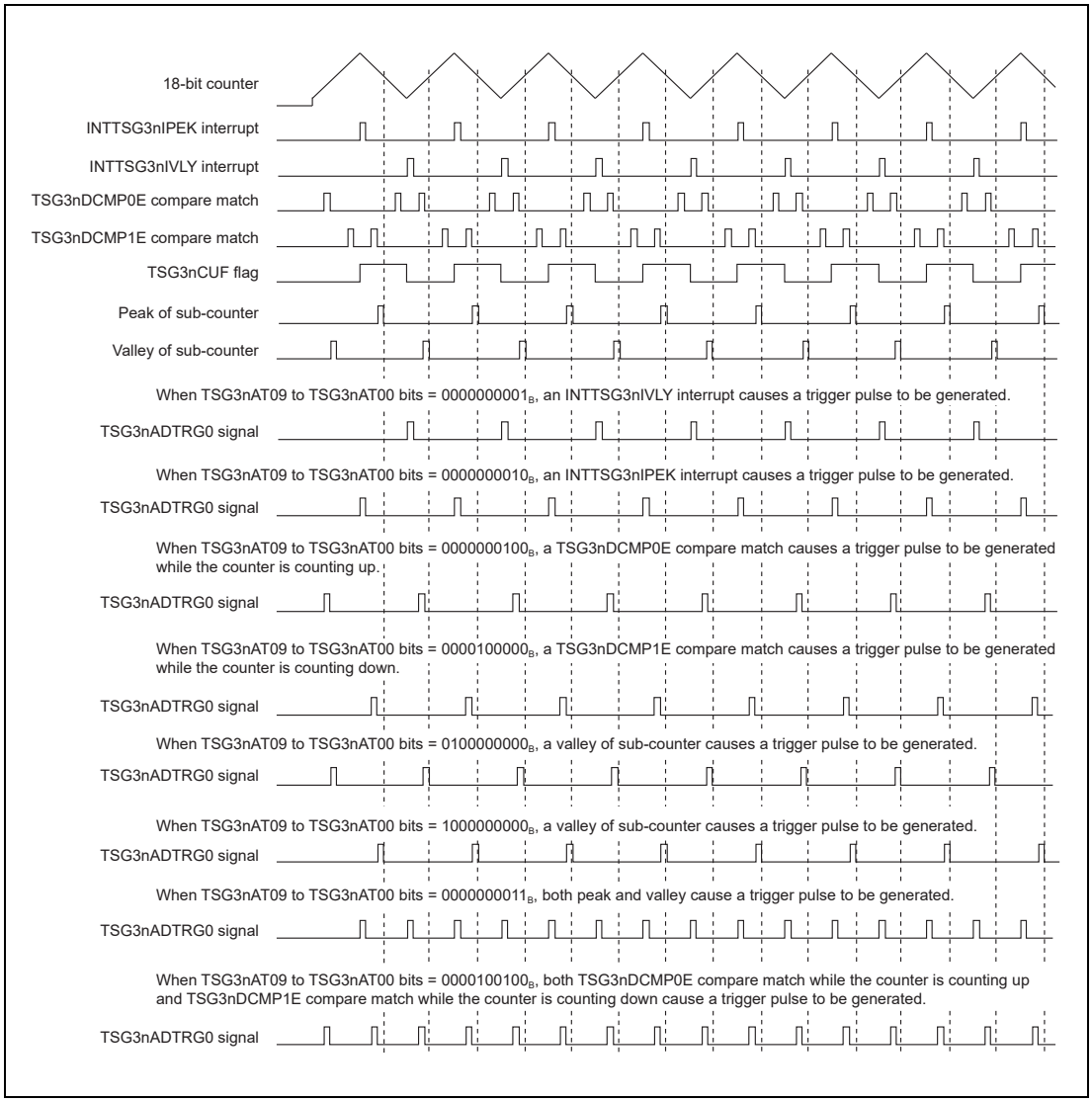

Figure 25.41 When TSG3nPIE = 1, TSG3nVIE = 1, and TSG3nRCC04 to TSG3nRCC00 = 00_H in TSG3nCTL4, and TSG3nACC01 and TSG3nACC00 = 00_B in TSG3nCTL5 (HT-PWM Mode)

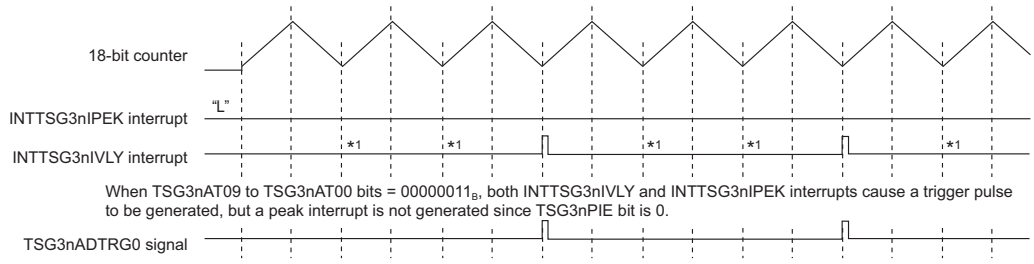

Note 1. Skipped interrupt request

Figure 25.42 When TSG3nPIE = 0, TSG3nVIE = 1, and TSG3nRCC04 to TSG3nRCC00 = 02_H in TSG3nCTL4 and TSG3nACC01 and TSG3nACC00 = 00_B in TSG3nCTL5 (HT-PWM Mode)

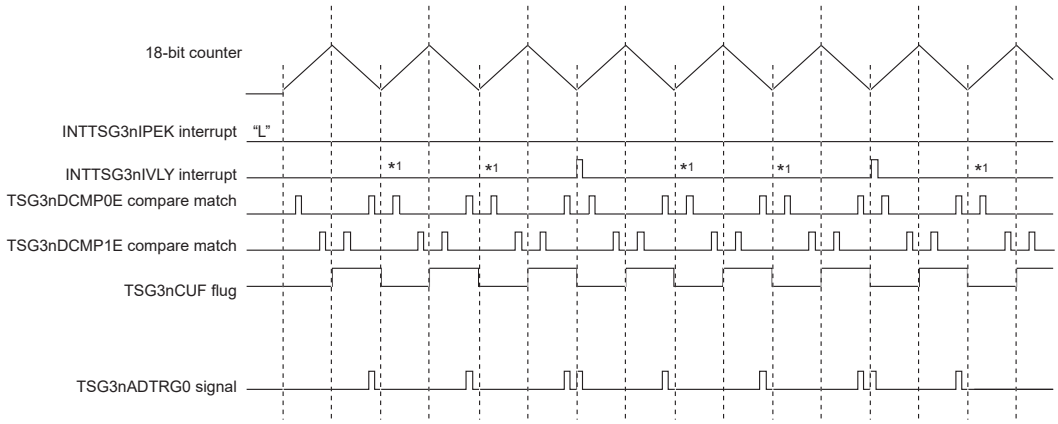

Note 1. Skipped interrupt request

Figure 25.43 When TSG3nPIE = 0, TSG3nVIE = 1, and TSG3nRCC04 to TSG3nRCC00 = 02_H in TSG3nCTL4 and TSG3nACC01 and TSG3nACC00 = 00_B, and TSG3nAT09 to TSG3nAT00 = $0000\ 1001_B$ in TSG3nCTL5 (HT-PWM Mode)

(2) A/D Conversion Trigger Skipping Function

Example of operation of the A/D conversion trigger skipping function is shown in **Figure 25.44**.

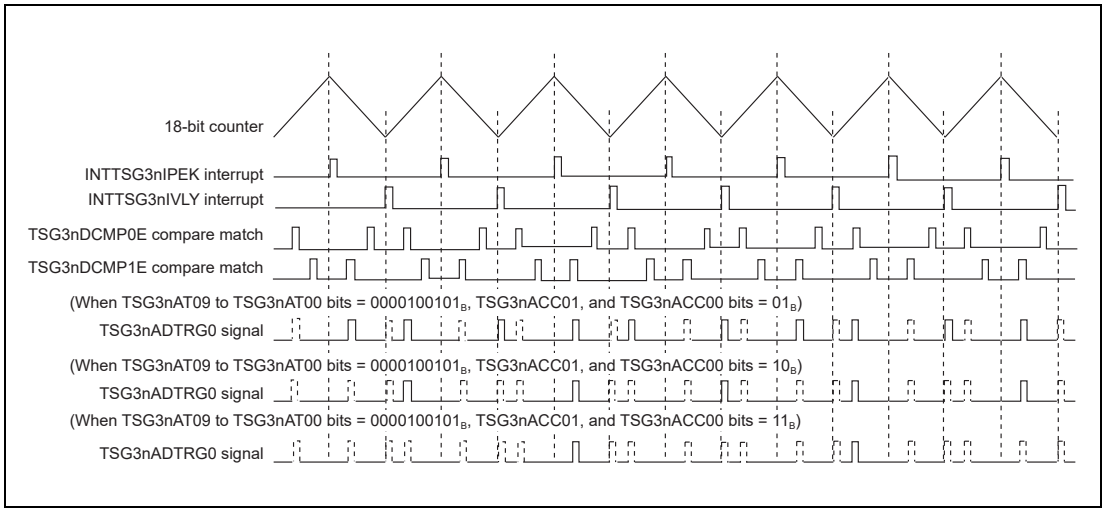

Figure 25.44 Example of Operation of A/D Conversion Trigger Skipping Function

NOTE

Broken-lined pulses indicate A/D conversion trigger pulses skipped by the A/D conversion trigger skipping function.

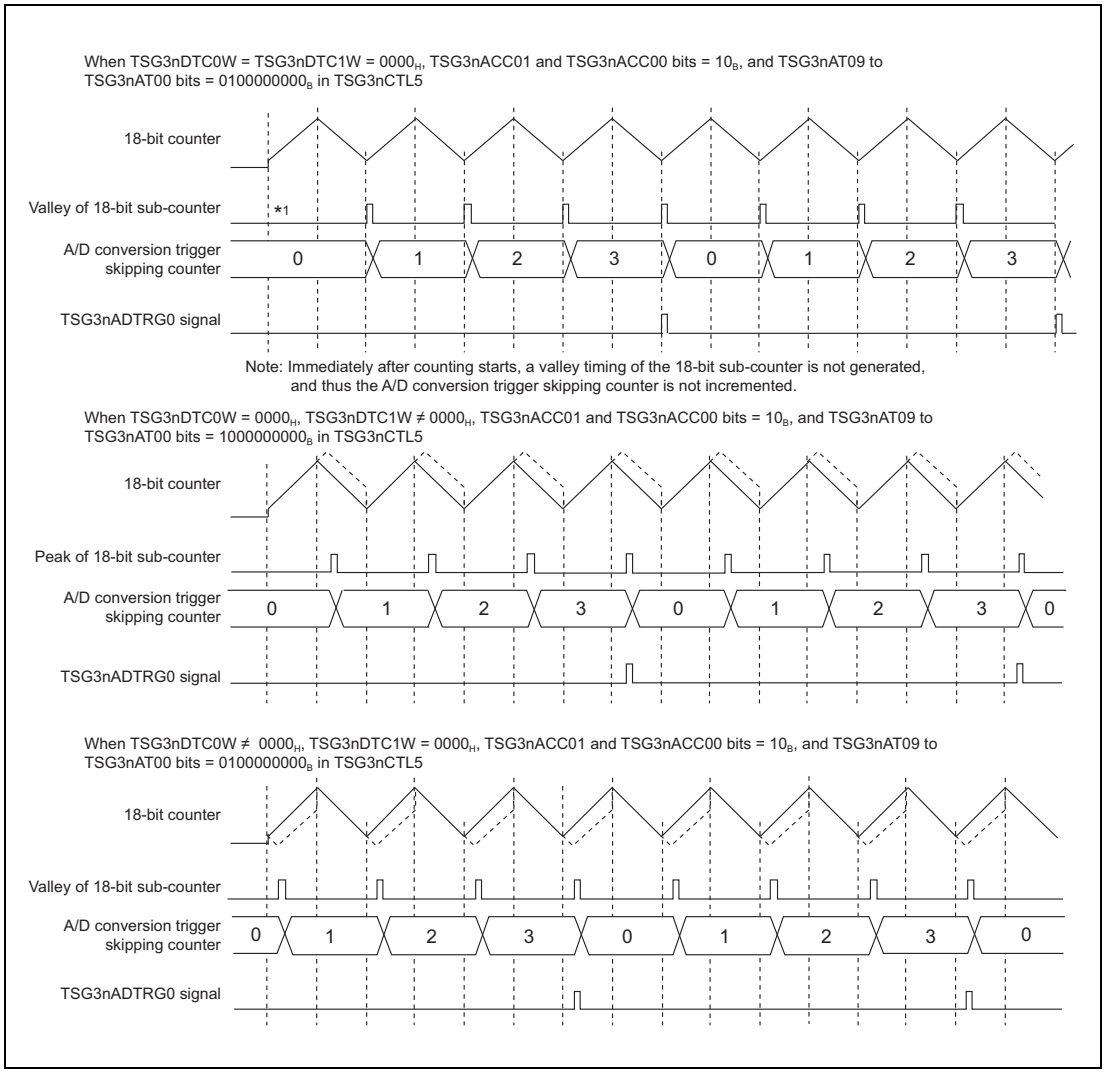

Figure 25.45 Example of Operation of A/D Conversion Trigger Skipping Function

(3) Notes on A/D Conversion Trigger

- If the same value is written to TSG3nDCMP0E and TSG3nDCMP1E or TSG3nDCMP2E, and the same condition (when the 18-bit counter increments or decrements) is set as the valid A/D conversion trigger, A/D conversion trigger skipping counter is incremented by one and one trigger pulse is output upon a match of the 18-bit counter with these registers.
- In PWM mode, SP-PWM mode, 120-DC mode, and HSP-PWM mode, a valley interrupt (INTTSG3nIVLY) is not generated. Only a peak interrupt (INTTSG3nIPEK) is valid.
- In 120-DC mode, when TSG3nS120DCO is set to 0, the 18-bit counter may be cleared during the carrier period due to switch of the output pattern. The A/D conversion trigger is not generated if TSG3nDCMP2E to TSG3nDCMP0E values do not match with the 18-bit counter value and a peak interrupt (INTTSG3nIPEK) is not generated.

25.4.6 Error/Warning Interrupt

25.4.6.1 Error Interrupt Function

If the simultaneous active state of the positive phase and inverse phase is detected after the error interrupt function is enabled (TSG3nIOC1.TSG3nEOC = 1), TSG3nSTR2.TSG3nTBF is set, and an error interrupt (INTTSG3nIER) of TSG3n is generated. Whether or not to detect an error of each phase (TSG3nO1 and TSG3nO2, TSG3nO3 and TSG3nO4, and TSG3nO5 and TSG3nO6 pins) can be selected by TSG3nCTL1.TSG3nTBA2 to TSG3nTBA0, respectively.

When an error occurs, outputs of the TSG3nO1 to TSG3nO6 pins can be set to high-impedance. For details, see **Section 26.4.1, Asynchronous Hi-Z Control Function**.

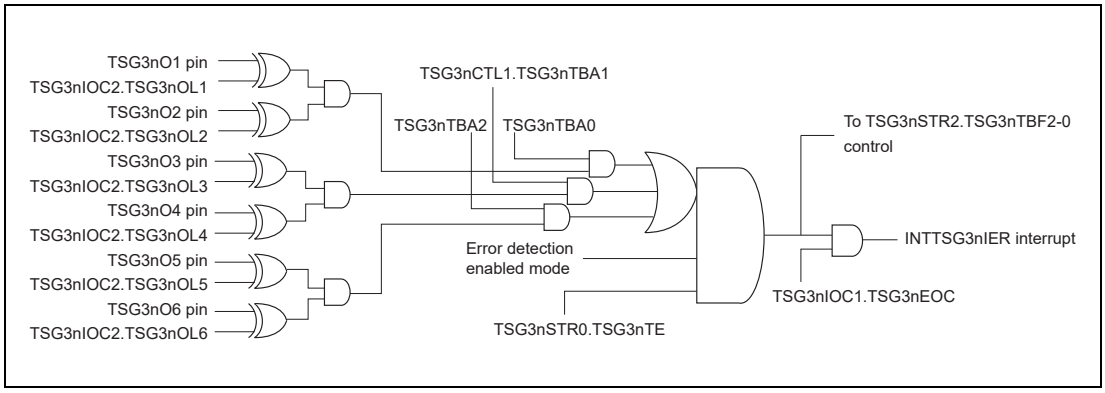

Figure 25.46 Error Interrupt (INTTSG3nIER) Generation Control Circuit

CAUTION

When an error interrupt is generated, the error status should be canceled (write 1 to TSG3nSTC.TSG3nTBR2 to TSG3nSTC.TSG3nTBR0) during an error interrupt handling. Otherwise, subsequent error interrupts are not generated.

(1) PWM Mode, 120-DC Mode and HSP-PWM Mode

In PWM mode, and HSP-PWM Mode if TSG3nCMP1E and TSG3nCMP2E, and TSG3nCMP3E and TSG3nCMP4E are set so that the TSG3nO1 and TSG3nO2 pins output the active level simultaneously, an error interrupt (INTTSG3nIER) is generated. With the same setting, if TSG3nCMP5E, TSG3nCMP6E, TSG3nCMP7E, TSG3nCMP8E, TSG3nCMP9E, TSG3nCMP10E, TSG3nCMP11E, and TSG3nCMP12E are set so that the TSG3nO3 and TSG3nO4, and TSG3nO5 and TSG3nO6 pins output the active level simultaneously, an error interrupt (INTTSG3nIER) is generated.

In 120-DC mode, if TSG3nCMP1E, TSG3nCMP2E, TSG3nCMP5E, TSG3nCMP6E, TSG3nCMP9E, TSG3nCMP10E, TSG3nCMP3E, TSG3nCMP4E, TSG3nCMP7E, TSG3nCMP8E, TSG3nCMP11E, TSG3nCMP12E, TSG3nPAT0W, and TSG3nPAT1W are set so that the TSG3nO1 and TSG3nO2 pins output the active level simultaneously, an error interrupt (INTTSG3nIER) is generated. With the same setting, the TSG3nO3 and TSG3nO4, and TSG3nO5 and TSG3nO6 pins also output the active level simultaneously, an error interrupt (INTTSG3nIER) is generated.

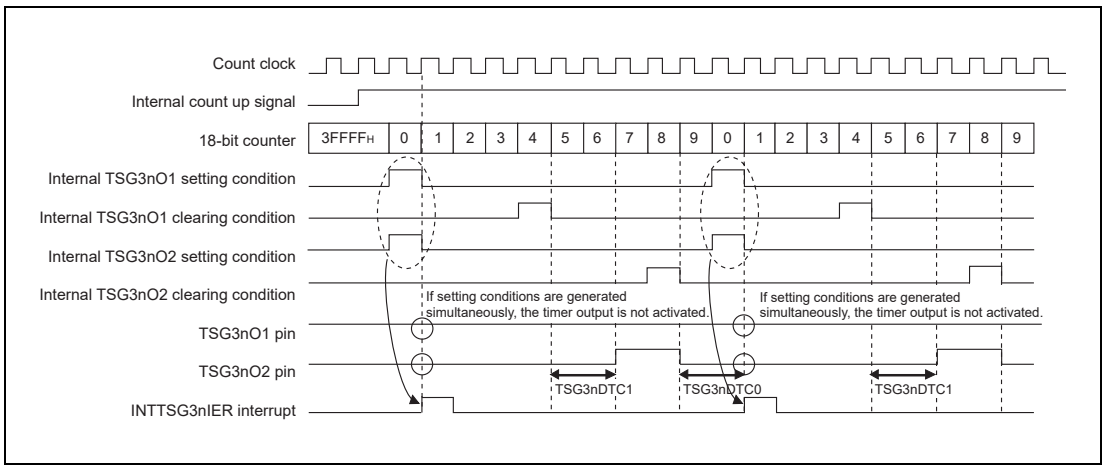

Figure 25.47 Example of Error Interrupt (INTTSG3nIER) Generation (PWM Mode)

NOTE

TSG3nO3 and TSG3nO4, and TSG3nO5 and TSG3nO6 behave the same.

When the active level of output is switched by operation TSG3nIOC2.TSG3nOL1 and TSG3nOL2, an error interrupt is generated as shown in the following figure.

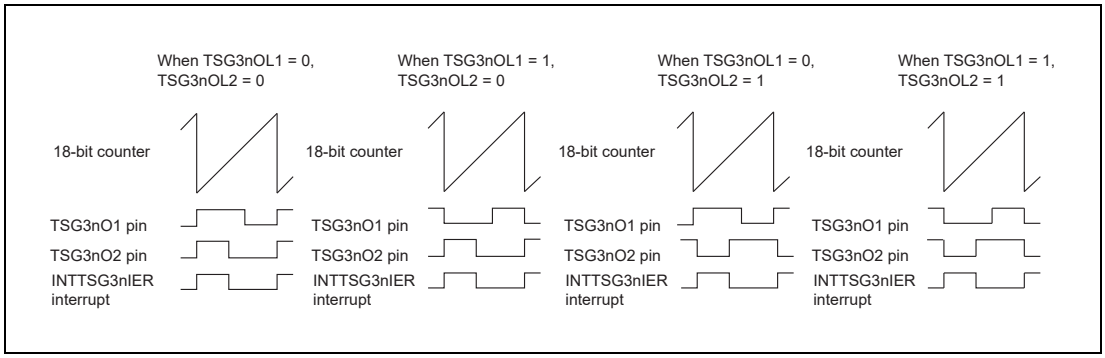

Figure 25.48 Example of Error Interrupt (INTTSG3nIER) Generation for each Active Level

(2) HT-PWM Mode and SP-PWM Mode

Either TSG3n dead time setting register 0 or 1 (TSG3nDTC0W or TSG3nDTC1W) is 0000_H, an error may occur.

NOTE

If an error occurs when the dead time control function is used (both TSG3nDTC0W and TSG3nDTC1W are not 0000_H), internal circuit failure may occur.

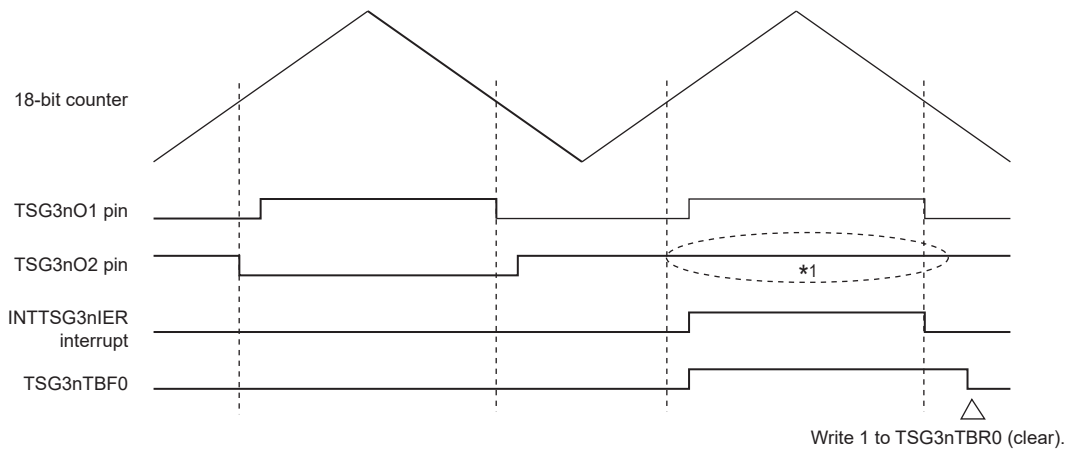

Note 1. TSG3nO2 pin control circuit failure occurs.

Figure 25.49 Example of Error Interrupt Operation

25.4.6.2 Warning Interrupt Function

TSG3n has a warning interrupt (INTTSG3nIWN).

Warning interrupt (INTTSG3nIWN) is generated when any of the following conditions is detected.

For details, see **Section 25.4.3, Flags**.

- When simultaneous change in two or more pins of TSG3nPTSI2 to TSG3nPTSI0 is detected:
  See **Section 25.4.3.4, Noise Detection Flag (TSG3nNDF)**.
- When reversal is detected of the TSG3nPTSI2 to TSG3nPTSI0 pins:
  See **Section 25.4.3.7, Pattern Reversal Detection Flag (TSG3nPRF)**.
- When 000 or 111 is detected from the TSG3nPTSI2 to TSG3nPTSI0 pins:
  See **Section 25.4.3.6, Pattern Error Detection Flag (TSG3nPEF)**.
- When a toggle of the TSG3nPTSI2 to TSG3nPTSI0 pins is generated three times or more between TSG3nOPCI0 and TSG3nOPCI1 signal triggers.:
  See **Section 25.4.3.8, TSG3nPTSI2 to TSG3nPTSI0 Pin Abnormal Toggle Detection Flag (TSG3nPTF)**.
- When the TSG3nOPCI0 and TSG3nOPCI1 signal triggers are detected simultaneously:
  See **Section 25.4.3.9, TSG3nOPCI0 and TSG3nOPCI1 Signal Simultaneous Trigger Detection Flag (TSG3nTDF)**.
- When the phase difference between the input pattern (TSG3nPTSI2 to TSG3nPTSI0 pins) and output pattern (TSG3nOPF2 to TSG3nOPF0) is detected:
  See **Section 25.4.3.10, Pattern Phase Difference Detection Flag (TSG3nPPF)**.

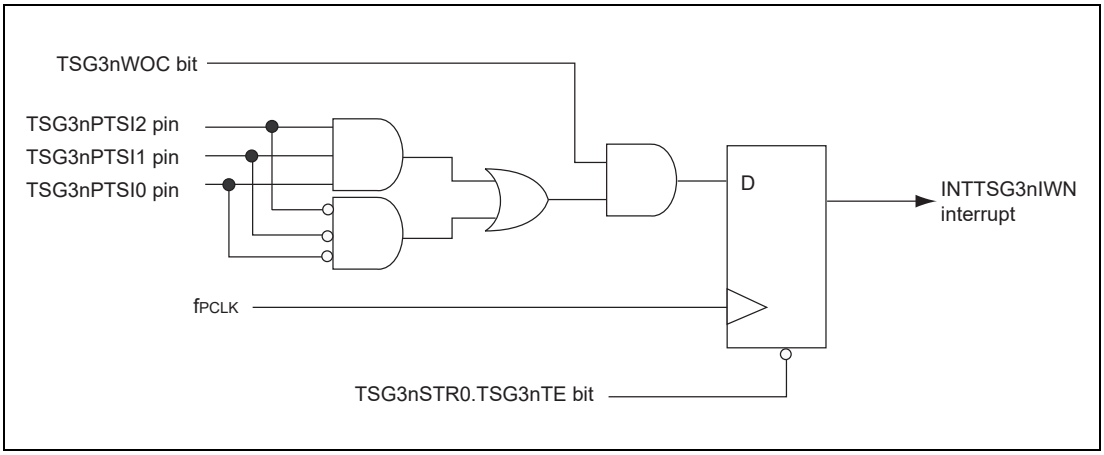

Figure 25.50 Detection of Abnormality of TSG3nPTSI2-TSG3nPTSI0 Pins

25.4.7 Operating Modes

25.4.7.1 PWM Mode

Overview

A PWM signal is output at the TSG3nO1 to TSG3nO6 pins according to set timing/clear timing of TSG3nCMP1E to TSG3nCMP12E registers with the PWM period set in the TSG3nCMP0E register.

Prerequisites

- Set the set timing to the compare register with an even number:
  TSG3nCMP2E (set timing of the TSG3nO1 output), TSG3nCMP4E (set timing of the TSG3nO2 output), TSG3nCMP6E (set timing of the TSG3nO3 output), TSG3nCMP8E (set timing of the TSG3nO4 output), TSG3nCMP10E (set timing of the TSG3nO5 output) and TSG3nCMP12E (set timing of the TSG3nO6 output)
- Set the clear timing to the compare register with an odd number:
  TSG3nCMP1E (clear timing of the TSG3nO1 output), TSG3nCMP3E (clear timing of the TSG3nO2 output), TSG3nCMP5E (clear timing of the TSG3nO3 output), TSG3nCMP7E (clear timing of the TSG3nO4 output), TSG3nCMP9E (clear timing of the TSG3nO5 output) and TSG3nCMP11E (clear timing of the TSG3nO6 output)

Functional description

Set the PWM period and set/clear timing of the TSG3nO1 to TSG3nO6 outputs. Set TSG3nTRG0.TSG3nTS = 1 to start the timer counter.

The TSG3nO1 to TSG3nO6 outputs are set to the inactive state at the same time the counting begins. The outputs are set to the active state by the match of the buffer registers TSG3nCMP2E, TSG3nCMP4E, TSG3nCMP6E, TSG3nCMP8E, TSG3nCMP10E, and TSG3nCMP12E with the 18-bit counter.

Next, the TSG3nO1 to TSG3nO6 outputs are set to the inactive state by the match of the buffer registers TSG3nCMP1E, TSG3nCMP3E, TSG3nCMP5E, TSG3nCMP7E, TSG3nCMP9E, and TSG3nCMP11E with the 18-bit counter.

During counting, a compare match interrupt (INTTSG3nI0 to INTTSG3nI12) is generated by the match of the buffer register TSG TSG3nCMP0E-TSG3nCMP12E.

CAUTION

Reload is executed when writing to the TSG3nCMP1E register at TSG3nCTL3.TSG3nRMC = 0. Therefore, even when it is needed to rewrite only the value of the TSG3nCMP0E register, a write operation to the TSG3nCMP1E register is necessary. When only the TSG3nCMP0E register is rewritten, reload is not done.

NOTE

The PWM mode is set when TSG3nCTL0.TSG3nMD2-TSG3nMD0 = 000_B.

(a) When TSG3nCMP0E and TSG3nCMP1E to TSG3nCMP12E are Not Rewritten during Timer Operation

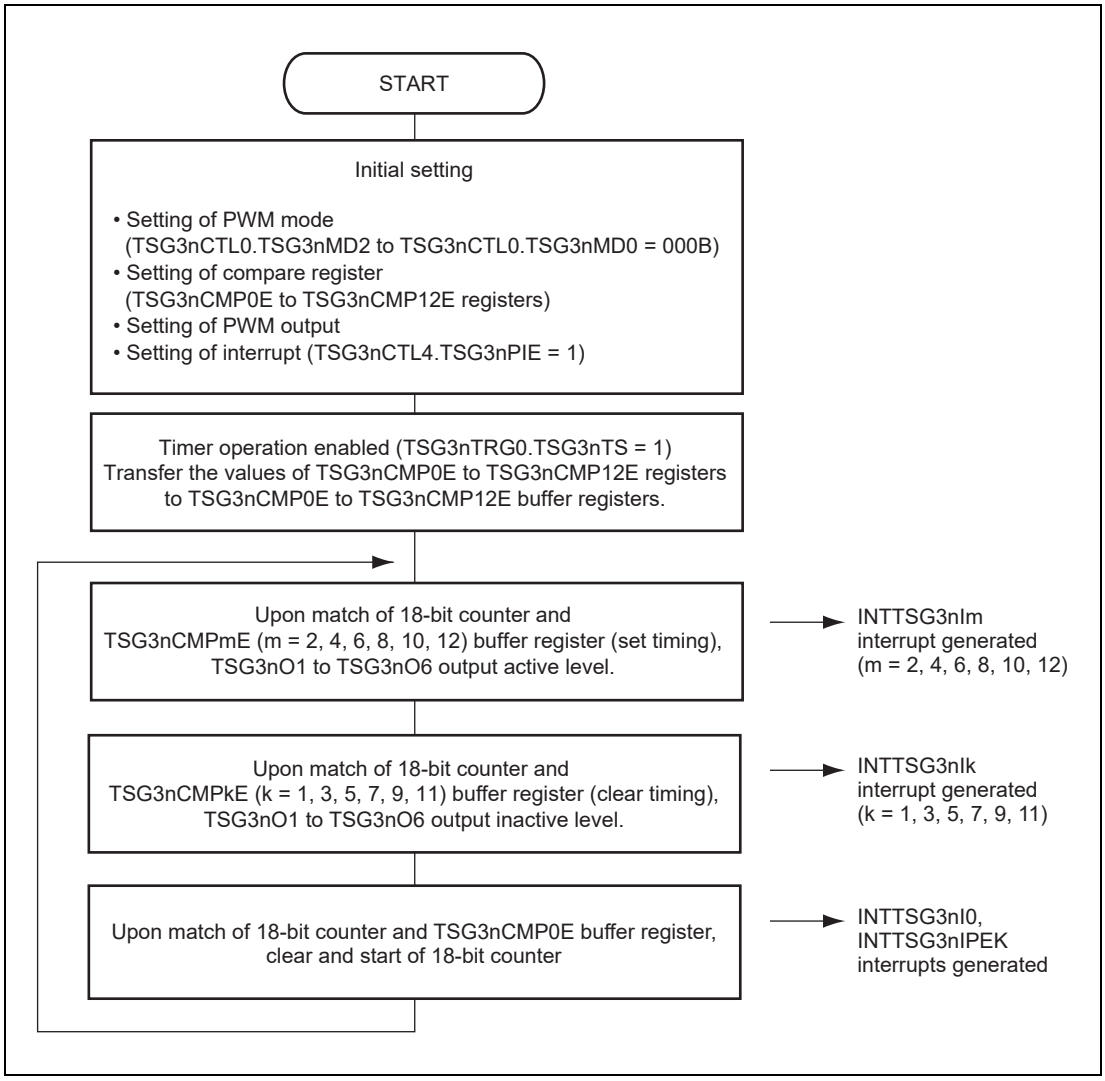

Figure 25.51 Basic Operation Flow of PWM Mode (1/2)

(b) When TSG3nCMP0E and TSG3nCMP1E to TSG3nCMP12E are Rewritten during Timer Operation

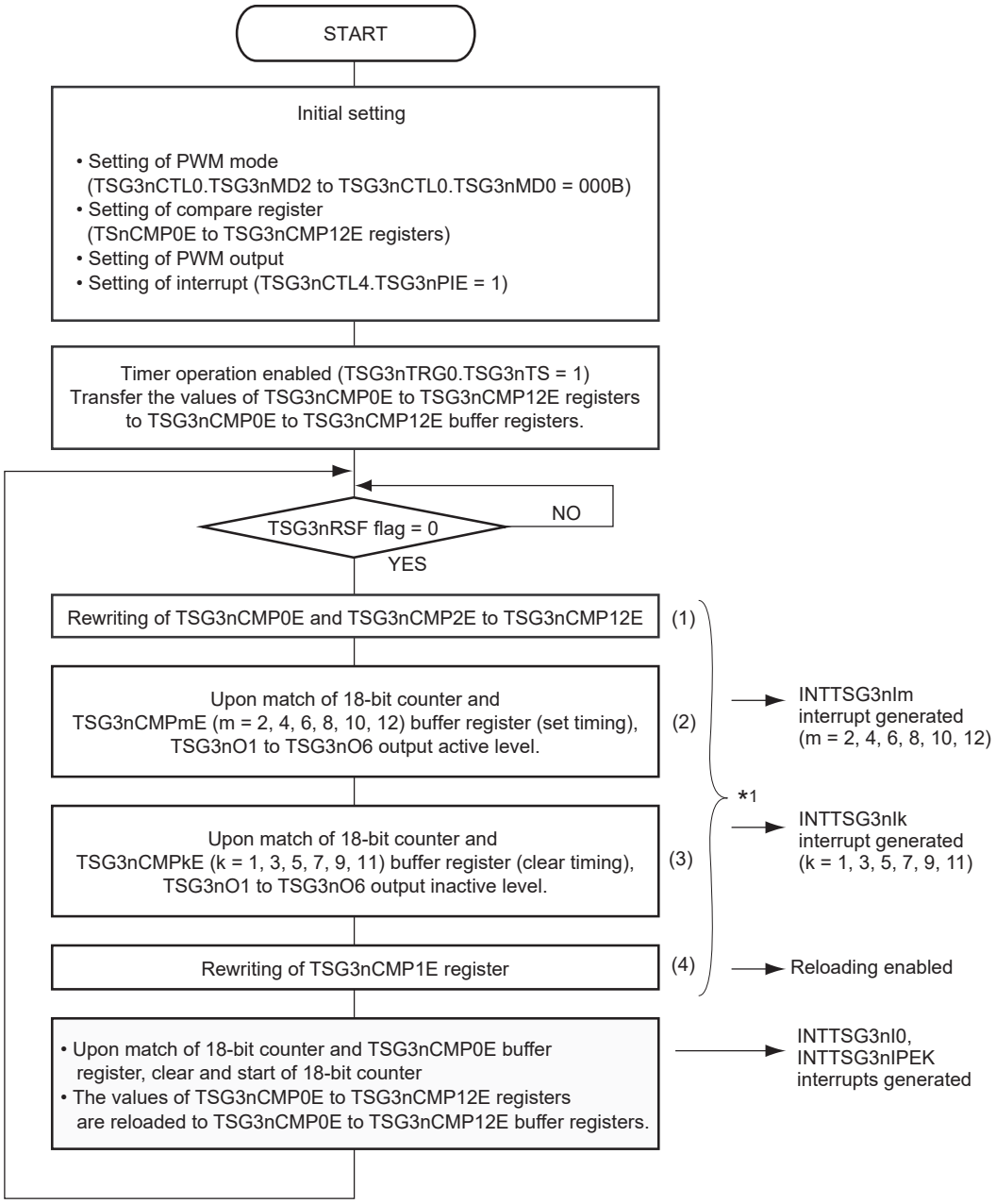

Note 1. The timing of (2) and (3) might be different depending on the rewriting timing of (1) and (4) and the TSG3nCMP1 value. Please make sure that (1) is always done before (4).

Figure 25.51 Basic Operation Flow of PWM Mode (2/2)

CAUTION

Please rewrite compare registers after confirming that the reload request flag TSG3nRSF is 0.

(1) List of Operations in PWM Mode

Table 25.54 Counter Functions in PWM Mode

Operation		Setting condition
18-bit counter	Start	TSG3nTRG0.TSG3nTS = 0 → 1, or a simultaneous start trigger
	Clear	Compare match of TSG3nCMP0E buffer register and 18-bit counter
	Stop	TSG3nTRG1.TSG3nTT = 0 → 1

Table 25.55 Functions of Compare Registers and Dead Time Setting Register in PWM Mode

Register	Rewriting Method	Rewrite during Operation	Function
TSG3nCMP0E	Reload/Anytime rewrite	Possible	Setting period
TSG3nCMPmE (m = 1 to 12)	Reload/Anytime rewrite	Possible	Setting set/clear timing
TSG3nDCMP0E, TSG3nDCMP1E, TSG3nDCMP2E	Reload/Anytime rewrite	Possible	Diagnostic output or A/D conversion trigger
TSG3nDTC0W, TSG3nDTC1W	Reload	Possible*1	Setting dead time

Note 1. For the detail see, **(3), Controlling Dead Time in PWM Mode**.

Table 25.56 PWM Mode: Timer Input Function in PWM Mode

Pin	Function
TSG3nCLKI	Clock enable input

Table 25.57 Timer Output in PWM Mode

Pin	Function
TSG3nOm (m = 1 to 6)	PWM output by compare match of TSG3nCMPkE buffer register and 18-bit counter (k = 1 to 12)
TSG3nO7	Diagnostic signal output or pulse output by A/D conversion trigger

Table 25.58 Interrupt Requests in PWM Mode

Interrupt	Function
INTTSG3nIm (m = 0 to 12)	Compare match of TSG3nCMPmE buffer register and 18-bit counter (m = 0 to 12)
INTTSG3nIER	Error (simultaneous active state of TSG3nO1 and TSG3nO2, or TSG3nO3 and TSG3nO4, or TSG3nO5 and TSG3nO6)
INTTSG3nIVLY	—
INTTSG3nIPEK	Peak interrupt (generated at the same timing as INTTSG3nI0)
INTTSG3nIWN	Warning interrupt

Note: "—": Not available in PWM mode

Table 25.59 Compare Match Timing in PWM Mode

Compare Match	Timing
TSG3nCMP0E	When 18-bit counter changes from TSG3nCMP0E to 00000_H
TSG3nCMPmE (m = 1 to 12)	After detecting the match of 18-bit counter and TSG3nCMPmE (m = 1 to 12)

Table 25.60 Example of Setting each Timer Output Condition in PWM Mode

Pin	Item	Output Period	Output Duty	
			Output Condition	Setting Condition
TSG3nOm (m = 1 to 6)	PWM output	(TSG3nCMP0E + 1) × count clock	Output an inactive level throughout one period (duty cycle 0%)	TSG3nCMPmE = TSG3nCMP (m + 1)E or TSG3nCMP (m + 1) E> TSG3nCMP0E (m = 1, 3, 5, 7, 9, 11)
			Output an active level of one count clock in one period	TSG3nCMPmE = TSG3nCMP (m + 1)E + 1 TSG3nCMP (m + 1)E = TSG3nCMPmE - 1 (m = 1, 3, 5, 7, 9, 11)
			Output an inactive level of one count clock in one period	TSG3nCMPmE = TSG3nCMP (m + 1)E - 1 TSG3nCMP (m + 1)E = TSG3nCMPmE + 1 (m = 1, 3, 5, 7, 9, 11)
			Output an active level throughout one period (duty cycle 100%)	TSG3nCMPmE > TSG3nCMP0E TSG3nCMP (m + 1)E ≤ TSG3nCMP0E (m = 1, 3, 5, 7, 9, 11)

When only TSG3nCMP2E is rewritten and TSG3nO1 is output (TSG3nIOC0.TSG3nTOE1 = 1, TSG3nIOC2.TSG3nOL1 = 0)

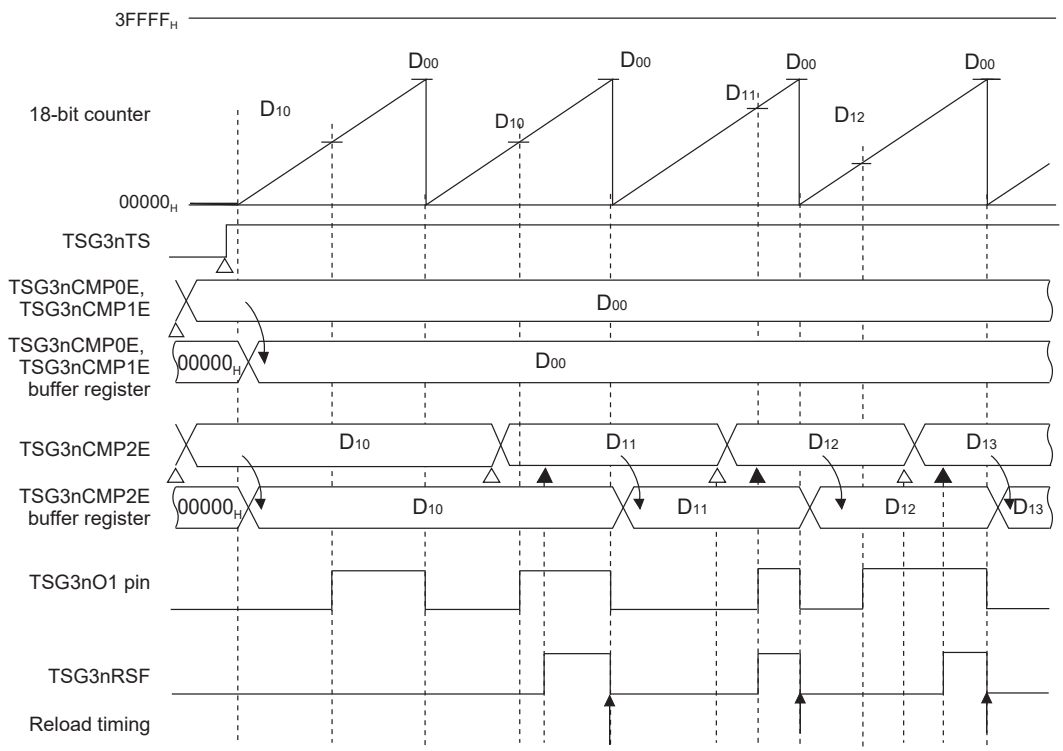

Note: Δ: Write access
▲: TSG3nCMP1E write access (equivalent)

Figure 25.52 Example of Basic Operation Timing of PWM Mode (1/2)

NOTES

1. D00: Set values of TSG3nCMP0E and TSG3nCMP1E (00000_H-$3FFFF_H$)
   D10, D11, D12 and D13: Set values of TSG3nCMP2E (00000_H-$3FFFF_H$)
2. TSG3nO1 (PWM) duty cycle = (TSG3nCMP1E-TSG3nCMP2E) (count lock)
   TSG3nO1 (PWM) period = (Set value of TSG3nCMP0E + 1) (count lock)
3. TSG3nO2-TSG3nO6 pins behave similarly to the TSG3nO1 pin

When TSG3nCMP0E-TSG3nCMP2E are rewritten, and TSG3nO1 is output (TSG3nIOC0.TSG3nTOE1 = 1, TSG3nIOC2.TSG3nOL1 = 0)

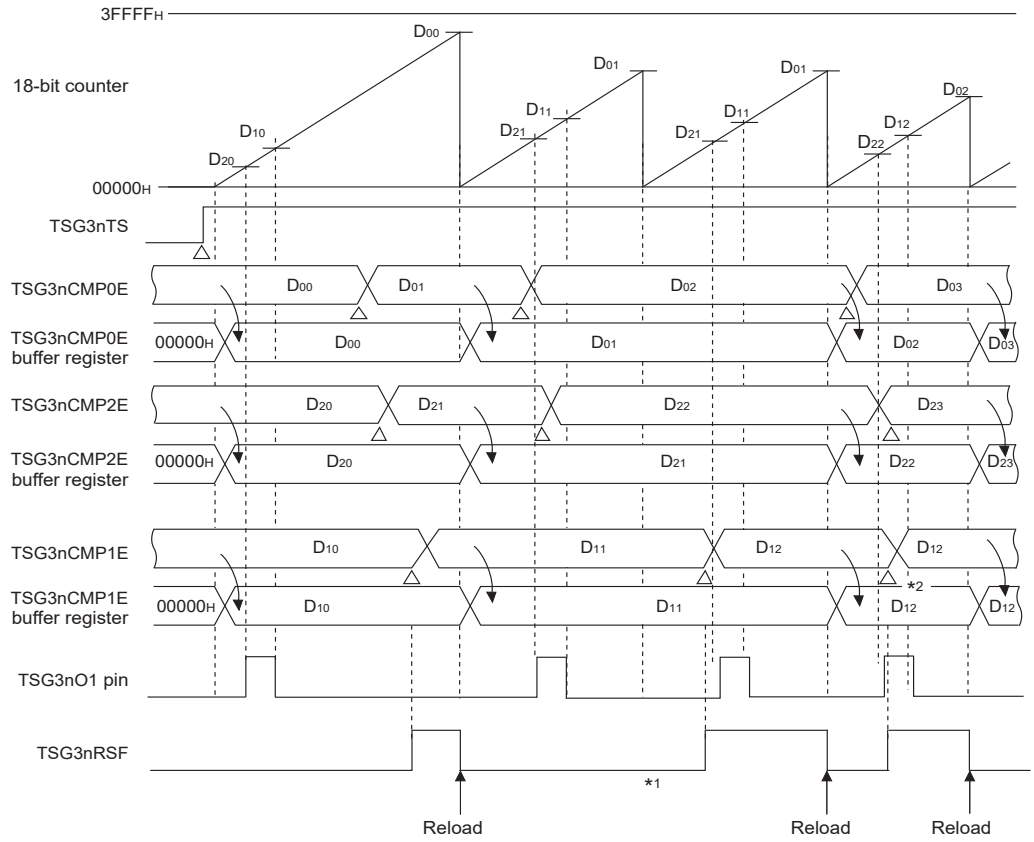

Note 1. The TSG3nCMP0E buffer register is not reloaded, because TSG3nCMP1E register was not rewritten.

Note 2. Equivalent writing

Note: Δ: Write access

Figure 25.52 Example of Basic Operation Timing of PWM Mode (2/2)

NOTES

1. D00, D01, D02, D03: Set point of TSG3nCMP0E (00000_H-$3FFFF_H$)
   D10, D11, D12, D13: Set point of TSG3nCMP1E (00000_H-$3FFFF_H$)
   D20, D21, D22, D23: Set point of TSG3nCMP2E (00000_H-$3FFFF_H$)
2. Outputs from TSG3nO2 to TSG3nO6 behave similarly to the TSG3nO1 pin.

(2) Interrupt/Reload Skipping Function in PWM Mode

By setting TSG3nCTL4.TSG3nPRE and TSG3nPIE to 1 and setting the TSG3nRCC04 to TSG3nRCC00 and TSG3nCTL3.TSG3nRIA, the reload and interrupt skipping function can be used.

By setting TSG3nPRE to 1 and setting the TSG3nRCC04 to TSG3nRCC00, the interrupt skipping function can be used.

(3) Controlling Dead Time in PWM Mode

By setting the TSG3nDTC0W and TSG3nDTC1W registers in PWM mode, it is possible to control the dead time. The dead time is controlled according to the switch timing of the TSG3nO1 output, the TSG3nO2 output, the TSG3nO3 output, the TSG3nO4 output, the TSG3nO5 output, and the TSG3nO6 output.

Table 25.61 Dead Time in PWM Mode

Switch Timing	Dead Time
TSG3nO1: High level to low level TSG3nO2: Low level to high level	Value of TSG3nDTC1W register
TSG3nO2: High level to low level TSG3nO1: Low level to high level	Value of TSG3nDTC0W register
TSG3nO3: High level to low level TSG3nO4: Low level to high level	Value of TSG3nDTC1W register
TSG3nO4: High level to low level TSG3nO3: Low level to high level	Value of TSG3nDTC0W register
TSG3nO5: High level to low level TSG3nO6: Low level to high level	Value of TSG3nDTC1W register
TSG3nO6: High level to low level TSG3nO5: Low level to high level	Value of TSG3nDTC0W register

NOTE

Dead time counter keeps operating even when operation stop (TSG3nTE = 0) setting collided with dead time insert timing, and the dead time set in TSG3nO1 and TSG3nO2 are always inserted.

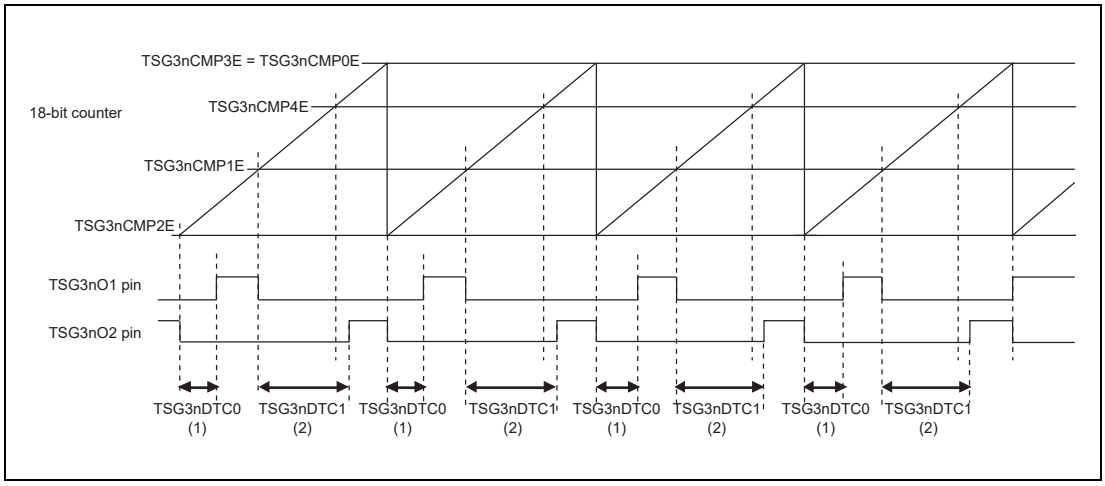

Figure 25.53 Example of Dead Time Control between TSG3nO1 and TSG3nO2 Outputs (1/2)

During (1), The dead time counter starts counting at the falling edge of the TSG3nO2 output. At this time, even after the 18-bit counter reaches 00000_H, the TSG3nO1 output stays inactive because the dead time counter is still operating. The TSG3nO1 output becomes active at the timing when the dead time count operation ends.

At (2), the dead time counter starts counting at the falling edge of the TSG3nO1 output. Even after the match of the 18-bit counter and TSG3nCMP4E, the TSG3nO2 output stays inactive because the dead time counter is still operating. The TSG3nO2 output becomes active at the timing when the dead time count operation ends.

NOTES

1. The TSG3nO1 and TSG3nO2 pins are set to active high
2. The TSG3nO3 and TSG3nO4 pins and the TSG3nO5 and TSG3nO6 pins outputs behave similarly.

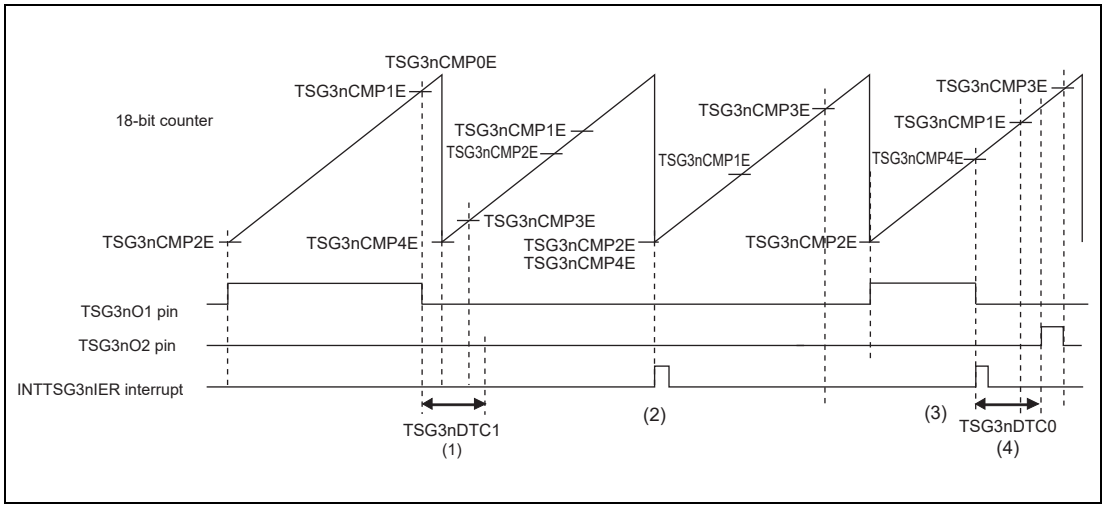

Figure 25.53 Example of Dead Time Control between TSG3nO1 and TSG3nO2 Outputs (2/2)

During (1), the dead time counter starts counting at the falling edge of the TSG3nO1 output. Even after the 18-bit counter reaches 00000_H and the match occurs between the 18-bit counter and TSG3nCMP4E, the TSG3nO2 output stays inactive because the dead time counter is still operating. Moreover, since the TSG3nCMP3E register compare match occurs before the operation of the dead time counter ends, the TSG3nO2 output stays inactive.

TSG3nCMP1E + TSG3nDTC1 ≥ TSG3nCMP0E + TSG3nCMP2E
(TSG3nO2 stays inactive)

TSG3nCMP2E + TSG3nDTC0 ≥ TSG3nCMP0E + TSG3nCMP1E
(TSG3nO1 stays inactive)

At (2), the INTTSG3nIER interrupt occurs because the TSG3nCMP2E register and the TSG3nCMP4E register are set so that the TSG3nO1 and TSG3nO2 outputs rise simultaneously. Here, the TSG3nO1 output and the TSG3nO2 output are inactive.

At (3), compare match with the TSG3nCMP4E register generates an INTTSG3nIER interrupt and both TSG3nO1 and TSG3nO2 outputs become inactive.

At (4), the falling edge (inactive) of the TSG3nO1 output is caused by the simultaneous active state detected and the dead time counter starts counting. After the end of the dead time counter operation, the TSG3nO2 output becomes active.

NOTES

1. The TSG3nO1 and TSG3nO2 pins are set to active high.
2. The TSG3nO3 and TSG3nO4 pins and the TSG3nO5 and TSG3nO6 pins outputs behave similarly.

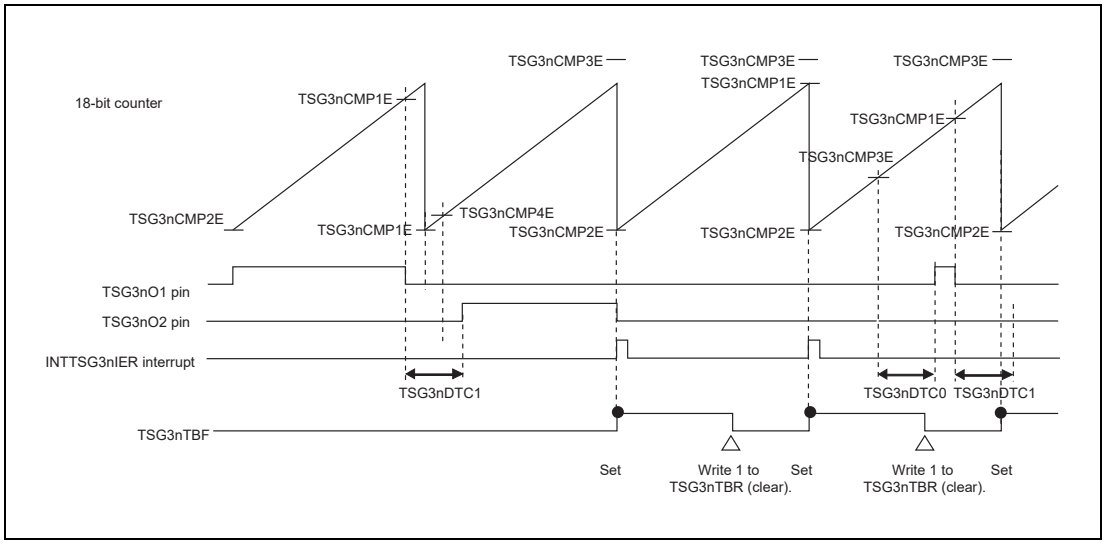

Figure 25.54 Example of 100% Duty Output at Dead Time Control

When the TSG3nO2 pin is set to duty cycle of 100% (TSG3nCMP3E ≥ TSG3nCMP0E + 1), the output of the TSG3nO1 pin is fixed to a low level. This control is intended to mask the active condition of TSG3nO1 output since the TSG3nO2 output is active before the TSG3nO1 output becomes active. In this case, the INTTSG3nIER interrupt is also generated because TSG3nO1 and TSG3nO2 outputs become high simultaneously.

NOTES

1. The TSG3nO1 and TSG3nO2 pins are set to active high.
2. The TSG3nO3 and TSG3nO4 pins and the TSG3nO5 and TSG3nO6 pins outputs behave similarly.

(4) Dead Time Rewriting during Timer Operation in PWM Mode

In PWM mode, it is possible to rewrite TSG3n dead time setting registers TSG3nDTC0W and TSG3nDTC1W while counting. The new settings are active at reload timing. It is not possible to change the dead time setting by rewriting at any time.

Please enable reloading by writing to the TSG3nCMP1E register.

25.4.7.2 HT-PWM mode (High accuracy Triangular - Pulse Width Modulation mode)

Overview

In this mode, the 18-bit counter (up/down count by ± 2 bits, practically 17 bits) and the 18-bit compare registers (LSB is used to control additional pulse) are used to generate a 6-phase PWM signal.

Prerequisites

- Set the carrier wave period to TSG3nCMP0E.
- Set the duty cycle of the voltage data signals of the U phase, V phase, and W phase with TSG3nCMPUE, TSG3nCMPVE, and TSG3nCMPWE (The values set to TSG3nCMPUE, TSG3nCMPVE, and TSG3nCMPWE are reflected immediately to the corresponding TSG3nCMPmE (m = 1, 2, 5, 6, 9, 10)).
- Symmetric triangular wave control is described in this section. Please refer to **Section 25.4.7.2 (10), Asymmetric Triangular Wave Control in HT-PWM Mode**, for asymmetric triangular wave control.

Functional description

Set the period of carrier wave and the duty cycle of the U phase, the V phase, and the W phase. Counting up begins when TSG3nTRG0.TSG3nTS is set to 1.

The 18-bit counter counts up from TSG3nDTC0 as the minimum value, and counts down upon the match of the maximum value of TSG3nCMP0E + TSG3nDTC0.

The dead time is set with TSG3nDTC0 and TSG3nDTC1. TSG3nDTC0 sets the dead time of inverse phase (OFF) to positive phase (ON) switch and TSG3nDTC1 sets the dead time of positive phase (OFF) to inverse phase (ON) switch. The 10-bit counters (TSG3nDTT1 to TSG3nDTT3) for dead time generation load the set values of TSG3nDTC0 and TSG3nDTC1 by the compare match of the 18-bit counter and the TSG3nCMPm buffer register (m = 1, 2, 5, 6, 9, 10), and start down-counting.

The INTTSG3nIm interrupts (m = 01, 02, 05, 06, 09, 10) are generated by the compare match of the 18-bit counter with TSG3nCMP1E, TSG3nCMP2E, TSG3nCMP5E, TSG3nCMP6E, TSG3nCMP9E, and the TSG3nCMP10E buffer registers.

INTTSG3nIm interrupts (m = 3, 4, 7, 8, 11, 12) are generated by the compare match of the 18-bit counter with the TSG3nCMP3E, 7E, and 11E buffer registers when counting down (TSG3nCUF = 1), and with the TSG3nCMP4E, 8E, and 12E buffer registers when counting up (TSG3nCUF = 0).

NOTE

The HT-PWM mode is enabled when TSG3nCTL0.TSG3nMD2-TSG3nMD0 = 001_B.

(1) Block Diagram and Basic Timing Chart

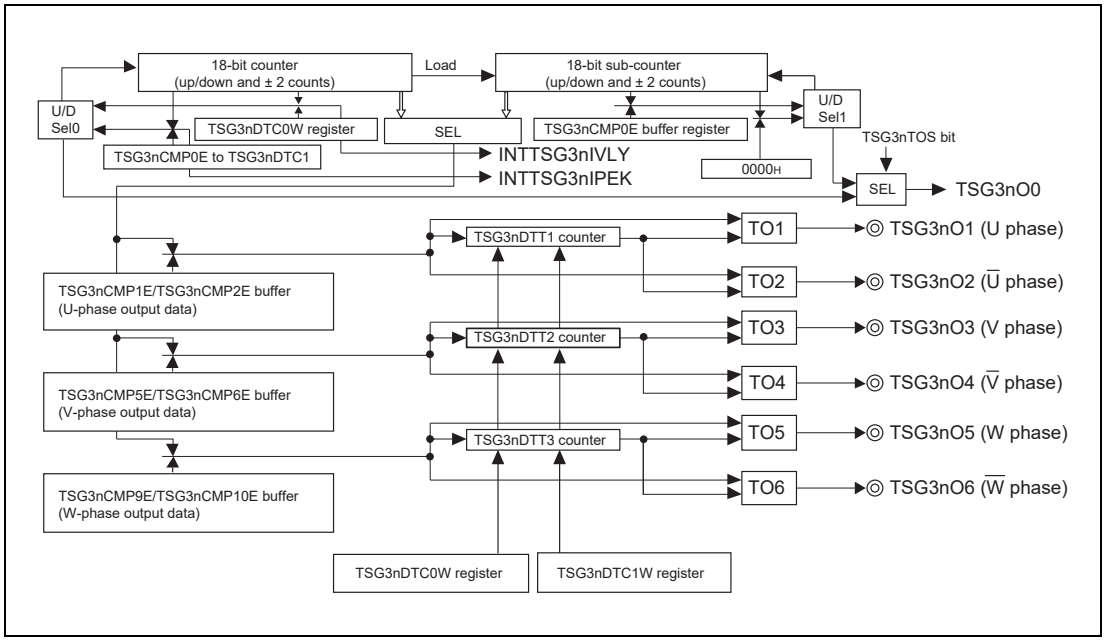

Figure 25.55 Block Diagram in HT-PWM Mode

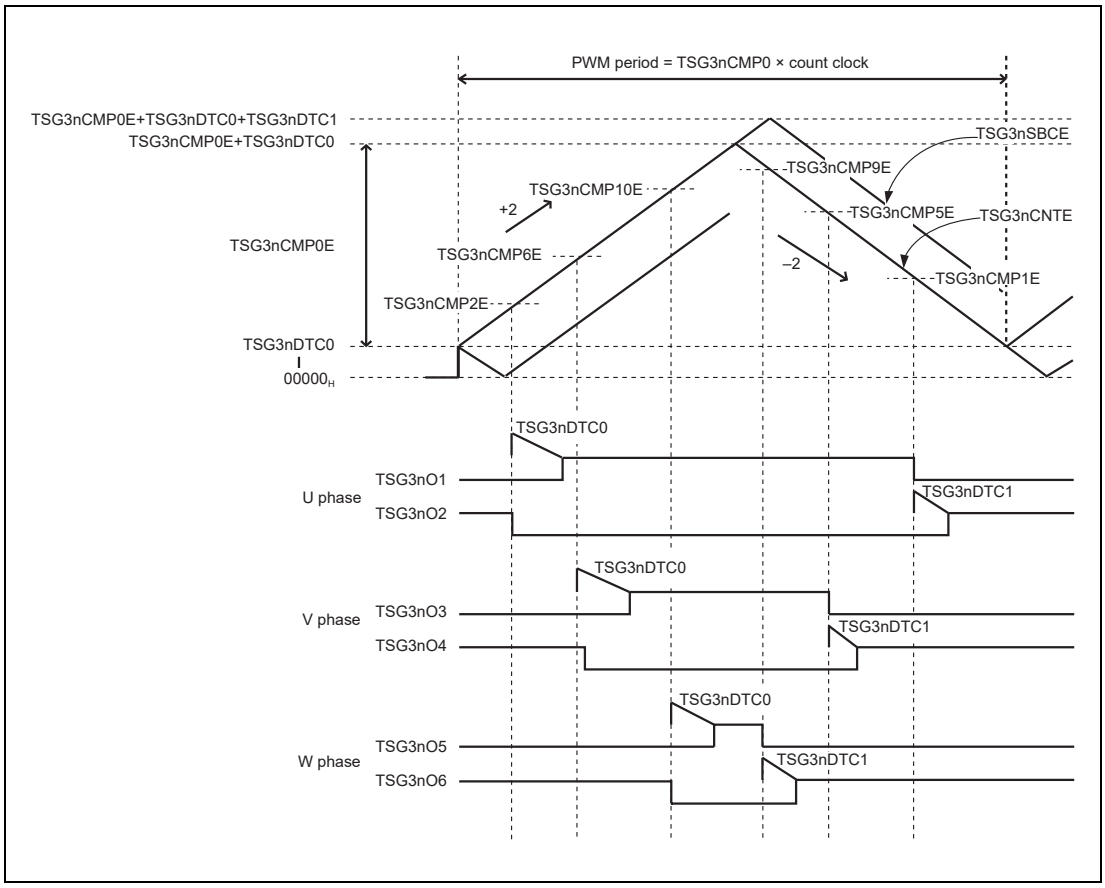

Figure 25.56 Basic Timing in HT-PWM Mode

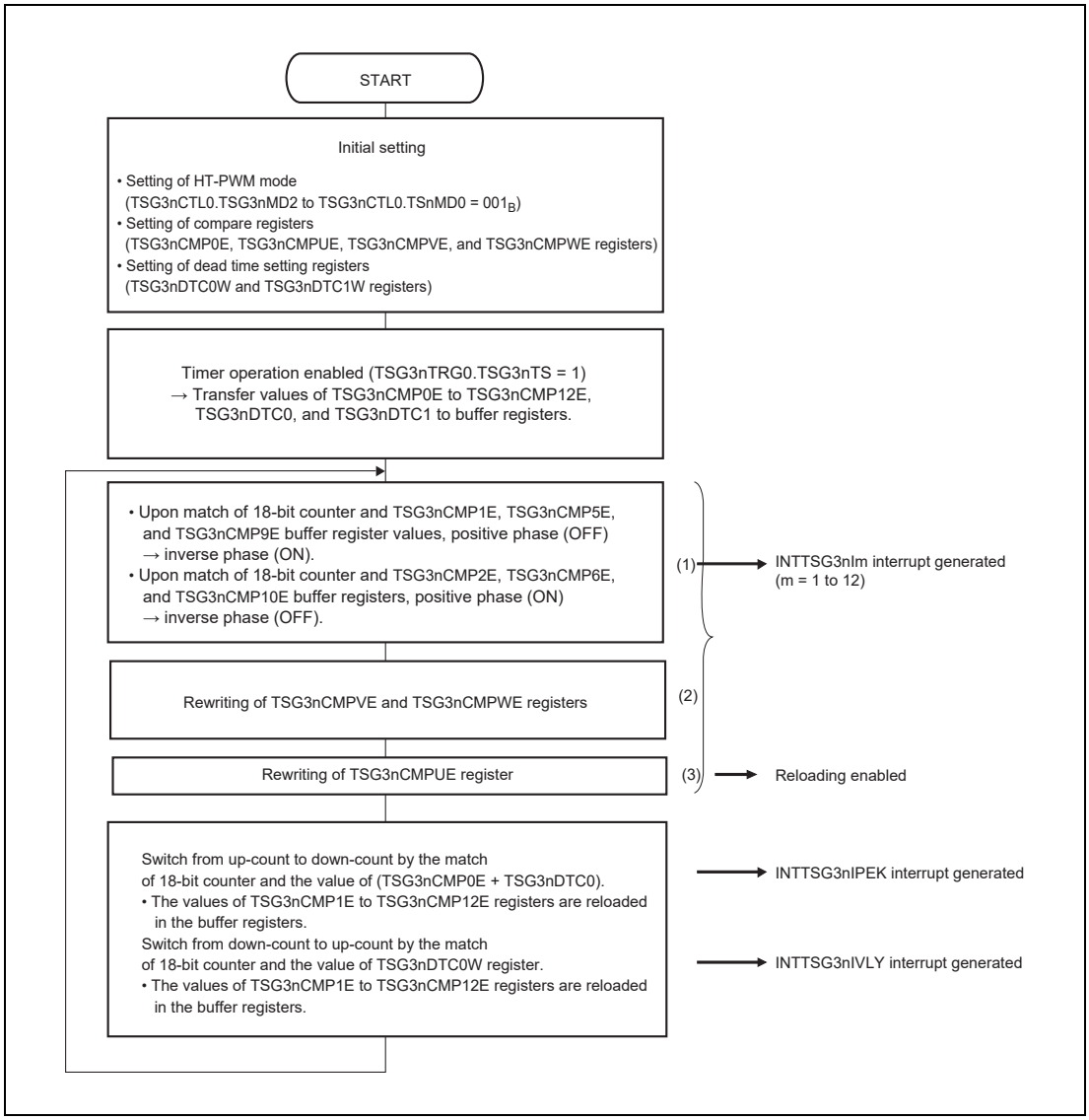

Figure 25.57 Basic Operation Flow in HT-PWM Mode

NOTE

- Write access to TSG3nCMPUE (TSG3nCMP1E) includes reloading enabling operation. Therefore, (3) must be done after (2).
- The INTTSG3nIPEK interrupt is generated only when TSG3nCTL4.TSG3nPIE = 1.
- The INTTSG3nIVLY interrupt is generated only when TSG3nCTL4.TSG3nVIE = 1.
- INTTSG3nI3, INTTSG3nI7, and INTTSG3nI11 outputs an interrupt at the match timing of TSG3nCMP3E, 7E, and 11E with TSG3nCNTE when counting down (TSG3nCUF = 1). INTTSG3nI4, INTTSG3nI8, and INTTSG3nI12 outputs an interrupt at the match timing of TSG3nCMP4E, 8E, and 12E with TSG3nCNTE when counting up (TSG3nCUF = 0).

(2) List of HT-PWM Mode Operations

Table 25.62 Counter Function in HT-PWM Mode

Operation		Setting Condition
18-bit counter	Start	TSG3nTRG0.TSG3nTS = 0 → 1 or simultaneous start trigger (counting up from TSG3nDTC0)
	Up count	Compare match of TSG3nDTC0 buffer register and 18-bit counter
	Down count	Compare match of TSG3nCMP0E + TSG3nDTC0 and 18-bit counter
	Clear	—
	Stop	TSG3nTRG1.TSG3nTT = 0 → 1
18-bit sub-counter	Start	TSG3nTRG0.TSG3nTS = 0 → 1 or simultaneous start trigger (counting down from TSG3nDTC0)
	Up count	Underflow
	Down count	Compare match of TSG3nCMP0E + TSG3nDTC0 + TSG3nDTC1 buffer register and 18-bit sub-counter
	Load	• TSG3nCMP0E + TSG3nDTC0: When value of 18-bit counter matches the value of buffer register TSG3nCMP0E + TSG3nDTC0 • TSG3nDTC0: When value of 18-bit counter matches the value of the buffer register TSG3nDTC0
	Clear	—
	Stop	TSG3nTRG1.TSG3nTT = 0 → 1

Table 25.63 Compare Register and Dead Time Setting Register Functions in HT-PWM Mode

Register	Rewrite Method	Rewrite during Operation	Function
TSG3nCMP0E	Reload/Anytime rewrite	Possible	Setting period
TSG3nCMPUE	—	Possible	PWM control for U phase
TSG3nCMP1E, TSG3nCMP2E	Reload/Anytime rewrite		
TSG3nCMPVE	—	Possible	PWM control for V phase
TSG3nCMP5E, TSG3nCMP6E	Reload/Anytime rewrite		
TSG3nCMPWE	—	Possible	PWM control for W phase
TSG3nCMP9E, TSG3nCMP10E	Reload/Anytime rewrite		
TSG3nDCMP0E, TSG3nDCMP1E, TSG3nDCMP2E	Reload/Anytime rewrite	Possible	Diagnostic signal output or A/D conversion trigger
TSG3nDTC0W, TSG3nDTC1W	Reload	Possible conditionally	Period and dead time setting

NOTE

- The rewritten values of TSG3nCMPUE, TSG3nCMPVE, and TSG3nCMPWE are set to TSG3nCMP1E, TSG3nCMP2E, TSG3nCMP5E, TSG3nCMP6E, TSG3nCMP9E and TSG3nCMP10E.
- For rewriting method of TSG3nDTC0 and TSG3nDTC1, see **Section 25.4.7.2**, **(8)**, **(a) TSG3nDTC0 and TSG3nDTC1 Rewriting**.

Table 25.64 Timer Output Function in HT-PWM Mode

Pin	Function
TSG3nO0	Active level output during up count, inactive level output at down count of the 18-bit counter/sub-counter
TSG3nO1	PWM output with dead time by compare match of TSG3nCMP1E buffer register and 18-bit counter (down count) and compare match of TSG3nCMP2E buffer register and 18-bit counter (up count) PWM output by compare match of TSG3nCMP1E buffer register and 18-bit sub-counter (during down counting) and compare match of TSG3nCMP2E buffer register and 18-bit sub-counter (during up counting) while TSG3nCMP1E < DTC0
TSG3nO2	Inverse phase output to TSG3nO1 with dead time
TSG3nO3	PWM output with dead time by compare match of TSG3nCMP5E buffer register and 18-bit counter (down count) and compare match of TSG3nCMP6E buffer register and 18-bit counter (up count). PWM output by compare match of TSG3nCMP3E buffer register and 18-bit sub-counter (during down counting) and compare match of TSG3nCMP6E buffer register and 18-bit sub-counter (during up counting) while TSG3nCMP5E < DTC0
TSG3nO4	Inverse phase output to TSG3nO3 with dead time
TSG3nO5	PWM output with dead time by compare match of TSG3nCMP9E buffer register and 18-bit counter (down count) and TSG3nCMP10E buffer register and 18-bit counter (up count). PWM output by compare match of TSG3nCMP5E buffer register and 18-bit sub-counter (during down counting) and compare match of TSG3nCMP10E buffer register and 18-bit sub-counter (during up counting) while TSG3nCMP9E < DTC0
TSG3nO6	Inverse phase output to TSG3nO5 with dead time
TSG3nO7	Diagnostic signal output or pulse output by A/D conversion trigger

NOTES

1. State of TSG3nO0 output can be switched with TSG3nIOC1.TSG3nTOS.
2. When the peak and trough values of the 18-bit sub-counter are set in TSG3nCMP1E and TSG3nCMP2E, clearing takes precedence.

Table 25.65 Interrupt Request in HT-PWM Mode

Interrupt	Function
INTTSG3nI0	Compare match of TSG3nDTC0 buffer register and 18-bit counter (periodic interrupt)
INTTSG3nIm (m = 1, 2, 5, 6, 9, 10)	Compare match of TSG3nCMPmE buffer register and 18-bit counter (m = 1, 2, 5, 6, 9, 10)
INTTSG3nIER	Error interrupt
INTTSG3nIVLY	Valley interrupt
INTTSG3nIPEK	Peak interrupt
INTTSG3nIWN	Warning interrupt

Table 25.66 Compare Match Timing in HT-PWM Mode

Compare Match	Timing
TSG3nCMP0E	When the 18-bit counter changes from TSG3nDTC0 to TSG3nDTC0 + 2
TSG3nCMPmE (m = 1, 2, 5, 6, 9, 10)	When 18-bit counter changes from TSG3nCMPmE to TSG3nCMPmE ± 2 (m = 1, 2, 5, 6, 9, 10)

Table 25.67 Example of Setting Each Timer Output Condition in HT-PWM Mode

Pin	Item	Output Period	Output Duty	
			Output Condition	Setting Condition
TSG3nO0	Toggle output	TSG3nCMP0E × count clock	Output an inactive level when counting up, and an active level when counting down.	—
TSG3nO1, TSG3nO3, TSG3nO5	PWM output	TSG3nCMP0E × count clock	Output an inactive level throughout one period (0% duty)	TSG3nCMP0E ≤ TSG3nCMPmE ≤ TSG3nCMP0E + TSG3nDTC0 + TSG3nDTC1 (m = U, V, W)
			Output an active level of one count clock in one period	TSG3nCMPmE = TSG3nCMP0E – 1 (m = U, V, W)
			Output an inactive level of one count clock in one period	TSG3nCMPmE = 0001_H (m = U, V, W)
			Output an active level throughout one period(100% duty)	TSG3nCMPmE = 0000_H (m = U, V, W)
TSG3nO2, TSG3nO4, TSG3nO6	PWM output		Output an inactive level throughout one period (0% duty)	TSG3nCMPmE ≤ TSG3nDTC0 + TSG3nDTC1 (m = U, V, W)
			Output an active level of one count clock in one period	TSG3nCMPm = TSG3nDTC0 + TSG3nDTC1 + 1 (m = U, V, W)
			Output an inactive level of one count clock in one period	TSG3nCMPmE = TSG3nCMP0E + TSG3nDTC0 + TSG3nDTC1 – 1 (m = U, V, W)
			Output an active level throughout one period (100% duty)	TSG3nCMPmE = TSG3nCMP0E + TSG3nDTC0 + TSG3nDTC1 (m = U, V, W)
TSG3nO7	Diagnostic signal output or pulse output by A/D conversion trigger	TSG3nCMP0E × count clock	See **Section 25.4.5, A/D Conversion Trigger Function**	

(3) Various Settings of HT-PWM Mode

Mode setting

HT-PWM mode is entered by setting TSG3nCTL0.TSG3nMD2-TSG3nMD0 to 001_B.

Setting timer output

The output pins TSG3nO1 to TSG3nO6 are controlled by setting TSG3nIOC0, TSG3nIOC2, and TSG3nIOC3.

The output pin TSG3nO0 indicates the up/down count status of the 18-bit counter or the 18-bit sub-counter. Switch between the 18-bit sub-counter and the 18-bit counter is done with the TSG3nIOC1.TSG3nTOS bit.

The TSG3nO7 pin outputs pulses of the diagnostic output or the A/D conversion trigger. Please set it as required.

Enabling error interrupt generation

Error interrupt (INTTSG3nIER) due to the detection of the simultaneous active state of the positive phase and inverse phase is enabled by setting TSG3nIOC1.TSG3nEOC to 1. In HT-PWM mode, with any value set in the compare register, the simultaneous active state of the positive phase and inverse phase is not possible. For the detail, see **Section 25.4.6, Error/Warning Interrupt**.

Setting register rewriting timing with reload function

With TSG3nCTL3.TSG3nRMC, reload (simultaneous rewrite) or rewrite (anytime) is specified for the registers with reload function. The default setting is 0 (reload). To reload, set TSG3nCTL4.TSG3nPRE or TSG3nVRE to 1.

The reload timing is not generated if both the TSG3nPRE bits and TSG3nVRE bits are set to 0.

When “anytime rewrite” is specified, the unintended output may be generated depending on the rewrite timing.

Setting interrupts and skipping function

Interrupts and the skipping function are set with TSG3nCTL4. TSG3nPIE should be set to 1 when peak interrupt (INTTSG3nIPEK) is necessary and TSG3nVIE to 1 when valley interrupt (INTTSG3nIVLY) is necessary. To use the skipping function for peak/valley interrupts, the TSG3nRCC4 to TSG3nRCC0 must be set.

Setting A/D conversion trigger output

To set A/D conversion trigger 0 (TSG3nADTRG0 signal), use TSG3nCTL5.TSG3nAT09 to TSG3nAT00. With TSG3nAT09 to TSG3nAT00, A/D conversion trigger output is enabled or disabled at the match of 18-bit counter (during up count) with TSG3nDCMP2E to TSG3nDCMP0E, the match of the 18-bit counter (during down count) with TSG3nDCMP2E to TSG3nDCMP0E, the 18-bit counter peak interrupt (INTTSG3nIPEK), the 18-bit counter valley interrupt (INTTSG3nIVLY), the 18-bit sub-counter peak timing, and 18-bit sub-counter valley timing.

To set A/D conversion trigger 1 (TSG3nADTRG1 signal), use TSG3nCTL6.TSG3nAT19 to TSG3nAT10.

To set the match timing of 18-bit counter and TSG3nDCMP2E to TSG3nDCMP0E, set the compare value to the pertinent register.

The skipping function can be used for TSG3nADTRG0 and the TSG3nADTRG1 signals. Use TSG3nACC01, TSG3nACC00 of TSG3nCTL5, TSG3nACC10, and TSG3nACC11 of TSG3nCTL6 to select the skipping rate among 1/1, 1/2, 1/4, and 1/8.

CAUTION

Set TSG3nCTL5, TSG3nCTL6, and TSG3nDCMP2E-TSG3nDCMP0E correctly when using the TSG3nO7 output for the A/D conversion trigger timing pulse.

Setting dead time

The dead time can be set with TSG3nDTC0 and TSG3nDTC1.

The dead time is calculated by the following expressions:

PCLK × TSG3nDTC0

PCLK × TSG3nDTC1

TSG3nDTC0 can set the time between a change of TSG3nO2, TSG3nO4, and TSG3nO6 to the inactive state and a change of TSG3nO1, TSG3nO3, and TSG3nO5 to the active state, respectively.

TSG3nDTC1 can set the time between a change of TSG3nO1, TSG3nO3, TSG3nO5 to the inactive state and a change of TSG3nO2, TSG3nO4, and TSG3nO6 to the active state, respectively.

TSG3nDTC0 and TSG3nDTC1 can only be set to an even value.

Carrier period

Set the carrier period with TSG3nCMP0E according to the following expression:

TSG3nCMP0E = Carrier period/count clock period (PCLK)

Satisfy the following requirements when setting the TSG3nCMP0E register regarding the dead time:

- TSG3nCMP0E + TSG3nDTC0 + TSG3nDTC1 ≤ 3FFFEH
- TSG3nCMP0E > TSG3nDTC0
- TSG3nCMP0E > TSG3nDTC1
- TSG3nCMP0E > 3 × MAX (TSG3nDTC0, TSG3nDTC1)
- TSG3nCMP0E: Even number

NOTE

MAX (A, B) indicates the larger value of A and B.

Duty (PWM width) setting

The duty of the U phase, the V phase, and the W phase is set with TSG3nCMPmE (m = U, V, W, or 1, 2, 5, 6, 9, and 10), respectively. The setting range of the compare registers is as follows:

00000_H ≤ TSG3nCMPmE ≤ TSG3nCMP0E + TSG3nDTC0 + TSG3nDTC1

LSB (least significant bit) of TSG3nCMPUE, TSG3nCMPVE, and TSG3nCMPWE indicates the setting of an additional pulse. When TSG3nCMPUE = 00003_H, the change in the inverse phase (TSG3nO2 output) is done one count clock later compared to the TSG3nCMPUE = 00002_H setting (when the 18-bit counter is up-counting). The additional pulse cannot be set to TSG3nCMP1E,

TSG3nCMP2E, TSG3nCMP5E, TSG3nCMP6E, TSG3nCMP9E, or TSG3nCMP10E (only even numbers can be set to these registers).

(4) H18-bit counter Operation in HT-PWM Mode

The 18-bit counter is initialized to 00000_H and the value of TSG3nDTC0 is loaded immediately after starting the TSG3n timer operation (TSG3nTRG0.TSG3nTS = 1). Afterwards, counting is done by +2. After 18-bit counter reaches the value of TSG3nCMP0E + TSG3nDTC0, counting is done by -2.

The following figure shows 18-bit counter operation.

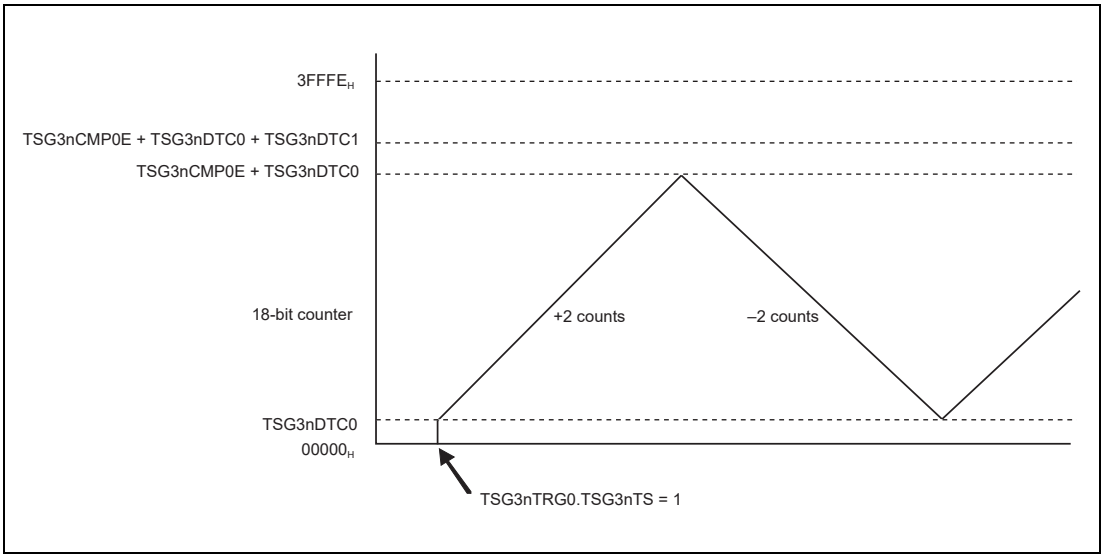

Figure 25.58 Example of 18-bit counter Operation in HT-PWM Mode

NOTE

Minimum 18-bit counter value: TSG3nDTC0
Maximum 18-bit counter value: TSG3nCMP0E + TSG3nDTC0
Carrier period: TSG3nCMP0E × count clock period (PCLK)

The 18-bit sub-counter is initialized to 00000_H and the value of TSG3nDTC0 is loaded immediately after starting the TSG3n timer operation (TSG3nTRG0.TSG3nTS = 1). Afterwards, counting by -2 is done until 00000_H is reached and counting by +2 begins. Next, the value of the 18-bit counter is loaded into the 18-bit sub-counter at a change timing of the 18-bit counter into the down count. Counting up by the 18-bit sub-counter continues until the value reaches the value of TSG3nCMP0E + TSG3nDTC0 + TSG3nDTC1, and then counting by -2 begins. Similarly, when the 18-bit counter value matches the TSG3nDTC0 value, the 18-bit counter value is loaded to the 18-bit sub-counter and the down count is continued.

The following figure shows the 18-bit sub-counter operation.

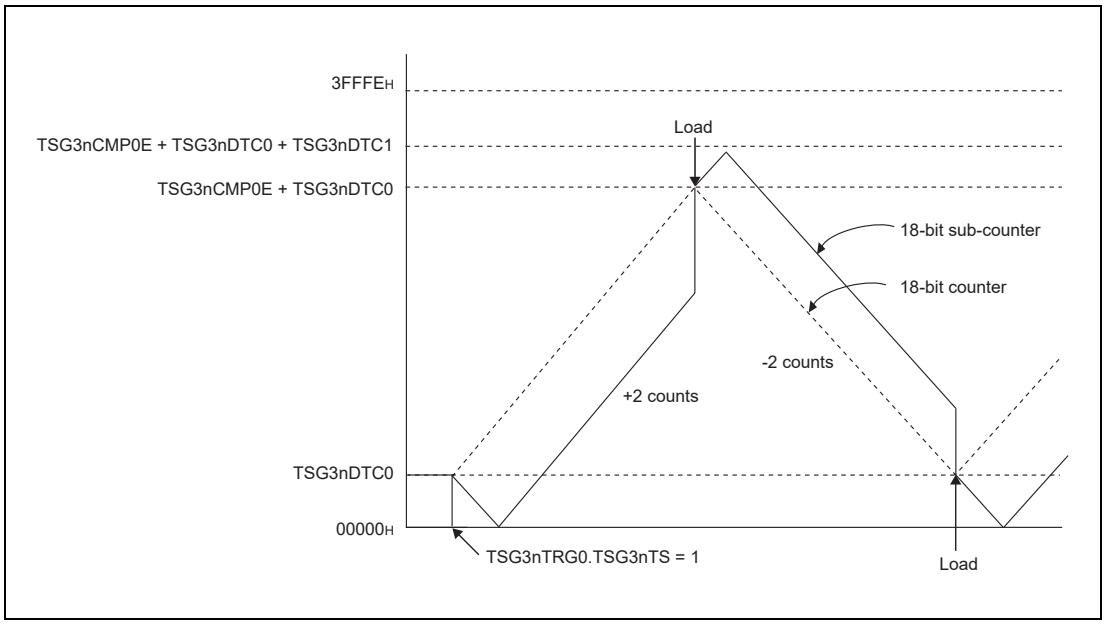

Figure 25.59 Example of 18-bit Sub-Counter Operation in HT-PWM Mode

NOTE

Minimum 18-bit sub-counter value: 00000_H
Maximum 18-bit sub-counter value: TSG3nCMP0E + TSG3nDTC0 + TSG3nDTC1

(5) Basic Operation of HT-PWM Mode

(a) Example of Timer Output Immediately after the Start of the TSG3n Timer Operation

The following figure shows the timing chart when TSG3nCMP0E = $0000E_H$, TSG3nDTC0 = 002_H, TSG3nDTC1 = 004_H and TSG3nCMPUE = 00000_H to 00014_H (excerpt). In this example, TSG3nIOC2.TSG3nOL1 to TSG3nOL6 = 000000_B.

When operation starts (TSG3nTRG0.TSG3nTS = 1), the level of the TSG3nO2 pin changes to active. Afterwards, if TSG3nCMPUE ≤ TSG3nDTC0, the TSG3nO2 pin is cleared after 1 count clock cycle.

The TSG3nO2 pin is cleared upon a match of the 18-bit counter and the compare register (TSG3nCMP2E), or a match of the 18-bit sub-counter and the compare register (TSG3nCMP2E) if TSG3nCMPUE ≥ TSG3nDTC0. Afterwards, the TSG3nO1 pin is set after the set dead time period (the TSG3nO1 pin is not set if TSG3nCMPUE ≥ TSG3nCMP0E).

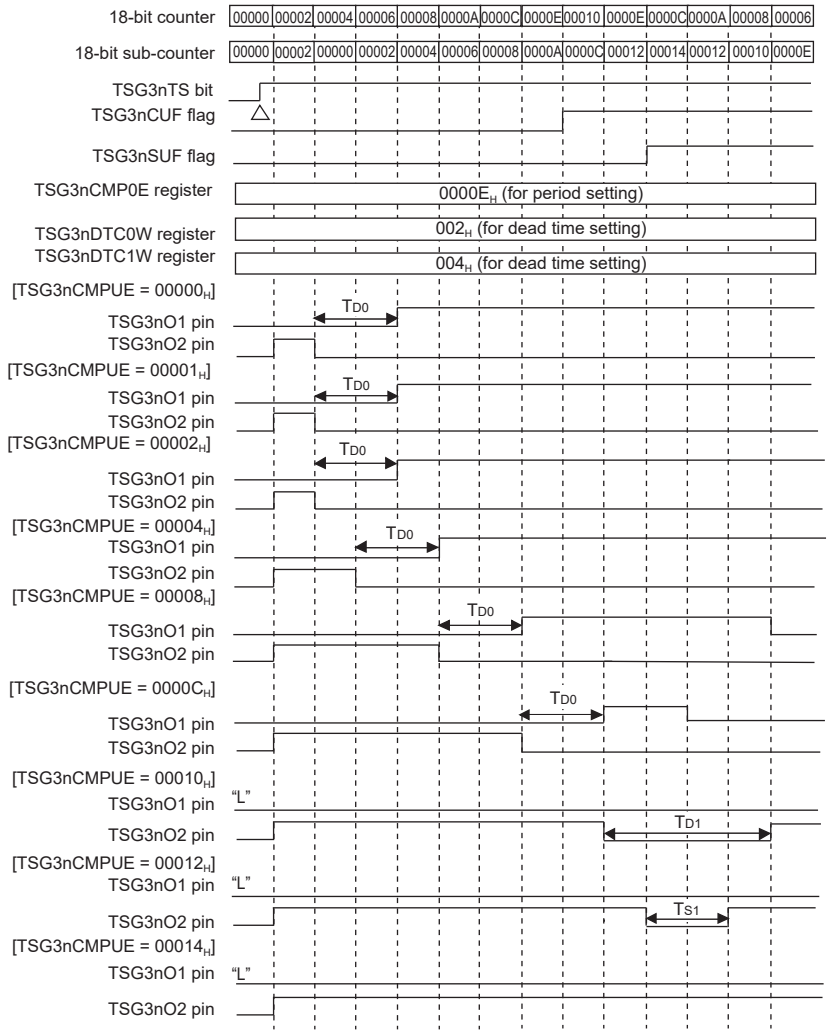

Note: Δ: Write access

Figure 25.60 Example of Timer Output when TSG3nTS is Set to 1 (Initial) in HT-PWM Mode)

NOTES

1. TSG3nCMP0E = $0000E_H$, TSG3nDTC0 = 002_H, TSG3nDTC1 = 004_H
2. T_{D0}: Time depending on setting of the dead time in the TSG3nDTC0W register
   T_{D1}: Time depending on setting of the dead time in the TSG3nDTC1W register
   T_{S1}: Time decided by compare match of the 18-bit sub-counter and TSG3nCMPUE register, when TSG3nCMPUE >18-bit counter maximum value

(b) Example of Timer Output during TSG3n Timer Operation

The following figure shows the timing chart when TSG3nCMP0E = $0000E_H$, TSG3nDTC0 = 002_H, TSG3nDTC1 = 004_H, and TSG3nCMPUE is set to 00000_H-00014_H (excerpt). In this example, TSG3nIOC2.TSG3nOL1-TSG3nOL6 = 000000_B.

The range of the active (high level) width of a positive phase (TSG3nO1) output is 00000_H ≤ TSG3nCMPUE ≤ TSG3nCMP0E (for the additional pulse). The range of the active (high level) width of an inverse phase (TSG3nO2) output is TSG3nDTC0 + TSG3nDTC1 ≤ TSG3nCMPUE ≤ TSG3nCMP0E + TSG3nDTC0 + TSG3nDTC1.

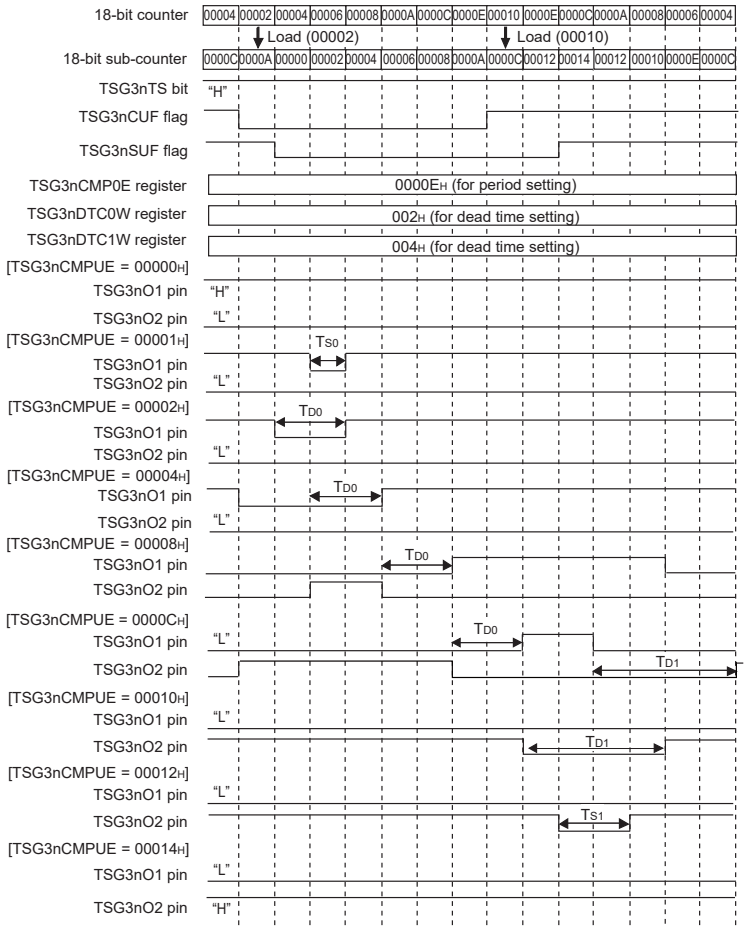

Figure 25.61 Example of Timer Output during TSG3n Operation in HT-PWM Mode

NOTES

1. TSG3nCMP0E = $0000E_H$, TSG3nDTC0 = 002_H, TSG3nDTC1 = 004_H
2. T_{D0}: Time depending on setting of the dead time in the TSG3nDTC0 register
   T_{D1}: Time depending on setting of the dead time in the TSG3nDTC1 register
   T_{S0}: Time decided by compare match of 18-bit sub-counter and the TSG3nCMPUE register, when TSG3nCMPUE < 18-bit counter minimum value
   T_{S1}: Time decided by compare match of the 18-bit sub-counter and the TSG3nCMPUE register, when TSG3nCMPUE > 18-bit counter maximum value

(6) Additional Pulse Control in HT-PWM Mode

The HT-PWM mode can generate an additional pulse by setting 1 to the LSB of the duty setting registers (TSG3nCMPUE, TSG3nCMPVE, and TSG3nCMPWE). This allows more precise control of the pulse duty than standard pulse control.

The following sections describe two examples of pulse output of TSG3nO1: additional pulse control is used in one example and additional pulse control is not used in another.

(a) Example of Pulse Output when Additional Pulse Control Is Used

Figure 25.62 shows the additional pulse control when an odd value is set to TSG3nCMPUE.

The arrows and numerical values show the width of the duty cycle of the TSG3nO1 output in one period.

When the additional pulse control is used as shown in **Figure 25.62**, the width of the output of the TSG3nO1 (duty cycle) can be set within a range from the width of 12 clock cycles to the width of 0 clock cycles in one-clock-cycle step.

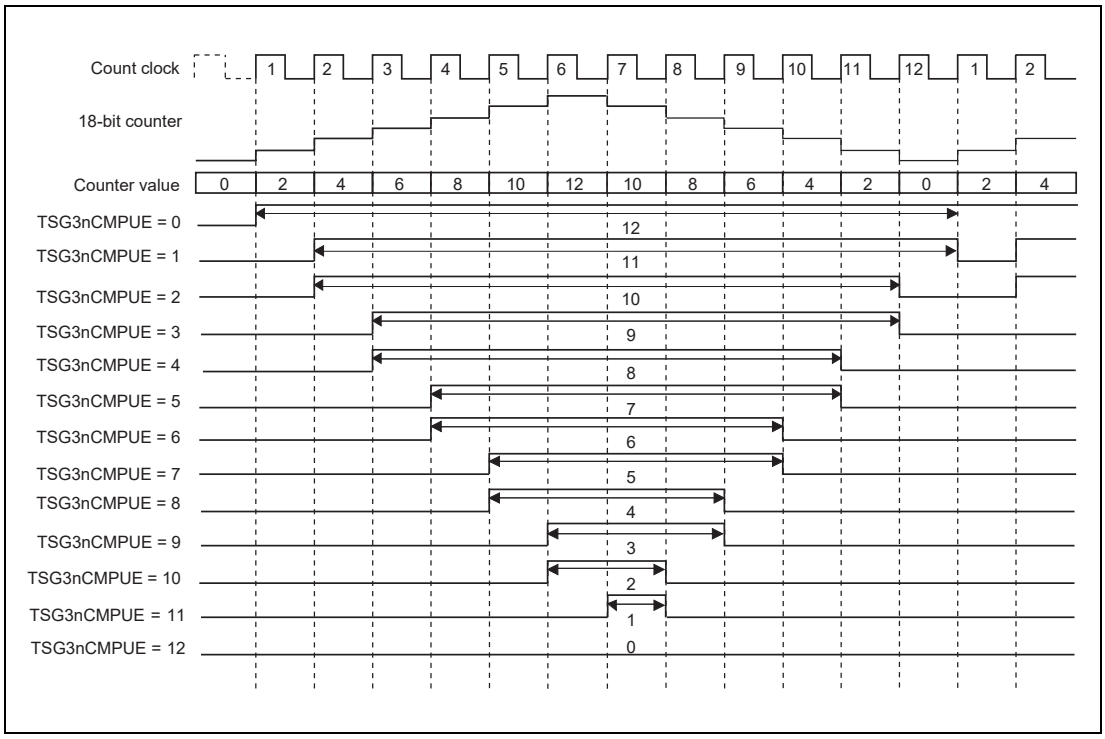

Figure 25.62 Example of TSG3nO1 Output when Additional Pulse Control Is Used in HT-PWM Mode

NOTE

TSG3nCMP0E = 12, TSG3nDTC0 = 0, TSG3nDTC1 = 0

(b) Example of Pulse Output when Additional Pulse Control Is Not Used

The arrows and numerical values in **Figure 25.63** show the width of the duty cycle of the TSG3nO1 output in one period.

When the additional pulse control is not used, the width of the TSG3nO1 output can be set within a range from the width of 12 clock cycles to the width of 0 clock cycles in two-clock-cycle step. In this case, the change in duty cycle is larger than that in the case when the additional pulse control is used.

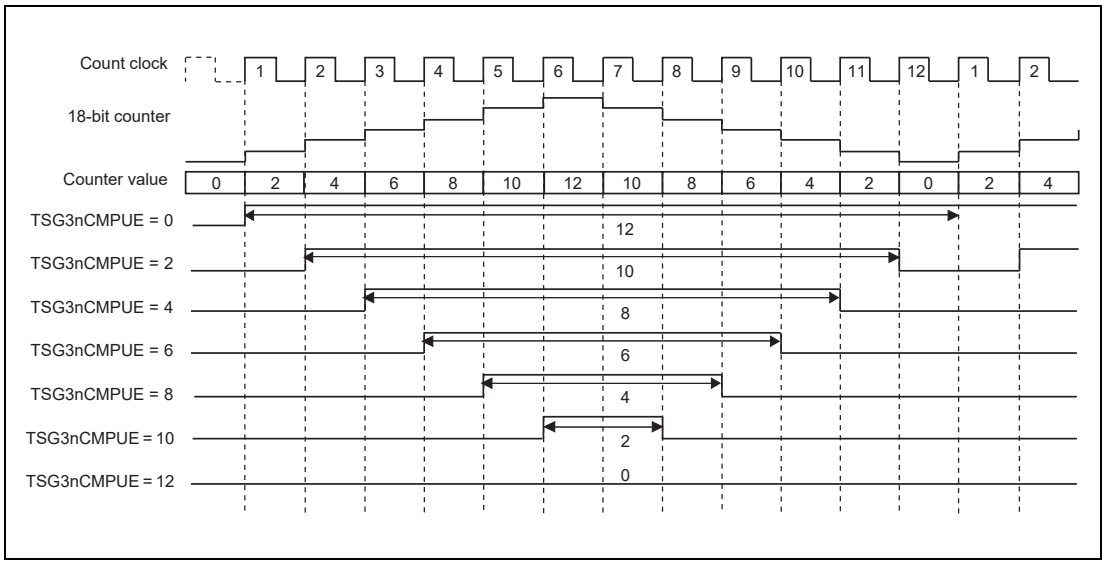

Figure 25.63 Example of Output when Additional Pulse Control Is Not Used in HT-PWM Mode

NOTE

TSG3nCMP0E = 12, TSG3nDTC0 = 0, TSG3nDTC1 = 0

(7) Dead Time Control in HT-PWM Mode

Duty setting registers are TSG3nCMPUE, TSG3nCMPVE, and TSG3nCMPWE in HT-PWM mode. The 6-phase PWM waveform of a variable duty is output by using these registers. To achieve the dead time control, there are two dead time setting registers (TSG3nDTC0W and TSG3nDTC1W) and six 10-bit down counters that operate synchronously with the count clock of the 18-bit counter. TSG3nDTC0 is used for setting a dead time from a change of the inverse phase to the inactive state to a change of the positive phase to the active state. TSG3nDTC1 is used for setting a dead time from a change of the positive phase to the inactive state to a change of the inverse phase to the active state.

The following figure shows the output waveform when TSG3nDTC0 = x and TSG3nDTC1 = y.

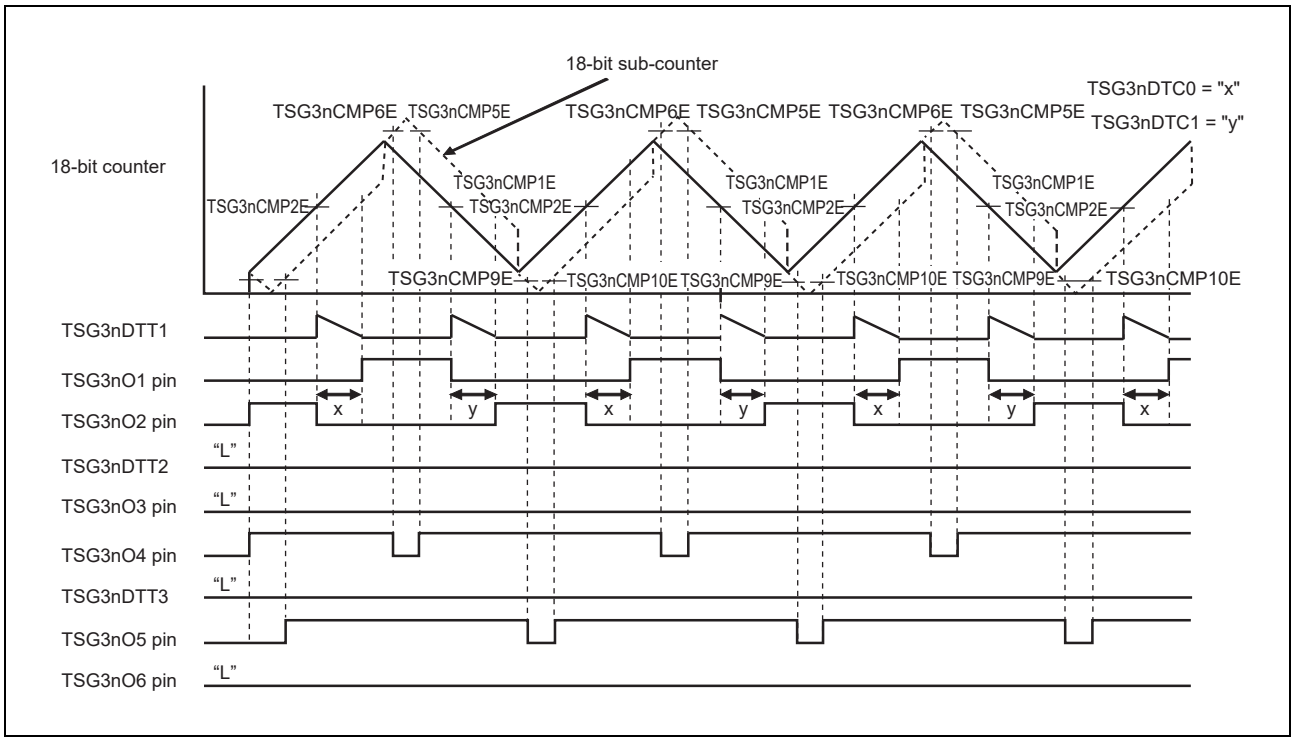

Figure 25.64 Example of Output Waveform with Dead Time in HT-PWM Mode

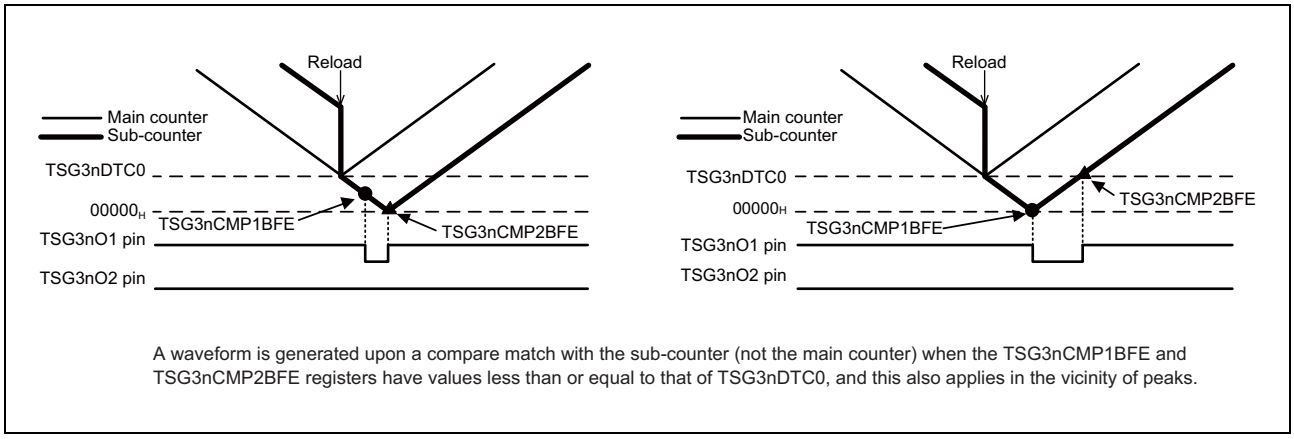

Figure 25.65 Example of Output Waveform near Trough after Reloading

(8) Notes Concerning Dead Time Control in HT-PWM Mode

(a) TSG3nDTC0 and TSG3nDTC1 Rewriting

It is possible to rewrite the dead time setting in TSG3nDTC0 and TSG3nDTC1 registers during timer operation.

CAUTIONS

1. **Rewrite TSG3nDTC0 and TSG3nDTC1 when the reload function is used (TSG3nRMC = 0).**
2. **The write protection code check function is applied when TSG3nDTC0 and TSG3nDTC1 are rewritten. For the detail, see the pertinent register descriptions (Section 25.3.43, Section 25.3.44, Section 25.3.63).**
3. **When the TSG3nCMP0E and TSg3nDTC1 are updated at the peak of the 18-bit counter:**
   When the set value of TSG3nCMPmE is greater than the updated TSG3nCMP0E + TSG3nDTC0 (new maximum value of the main counter), the match interrupt (INTTSG3nlm) is not generated immediately after reloading (m = 2, 6, or 10).

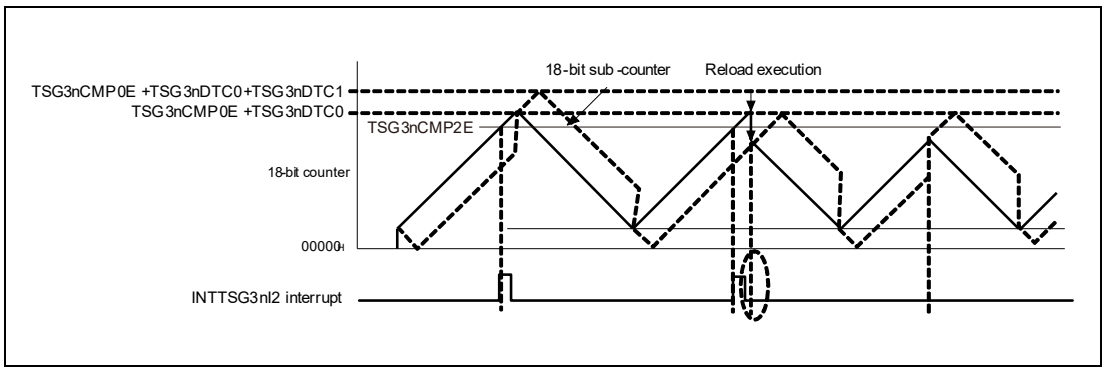

Figure 25.66 Example of Operation During Reloading at 18-Bit Counter Peak Timing

4. **When the TSG3nDTC0 is updated at the valley of the 18-bit counter:**
   When the TSG3nCMPmE set value is smaller than the updated TSG3nDTC0 (new minimum value of the main counter), the match interrupt (INTTSG3nlm) is not generated immediately after reloading (m = 1, 5, or 9).

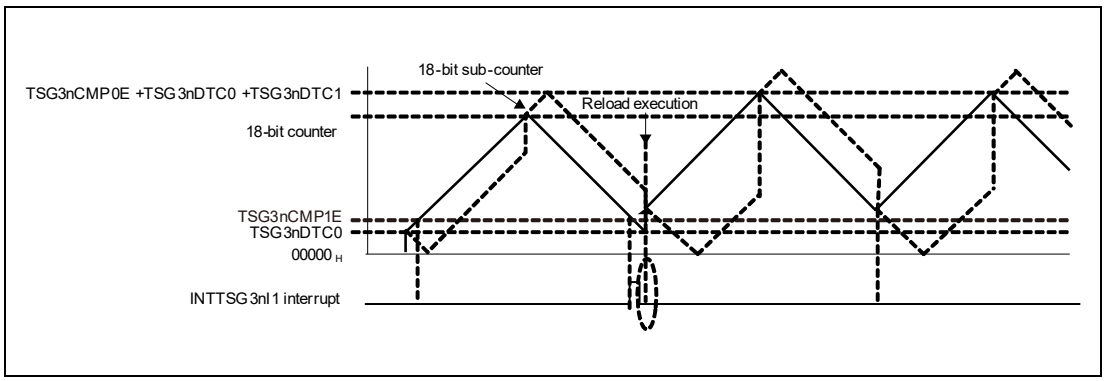

Figure 25.67 Example of Operation During Reloading at 18-Bit Counter Trough Timing

(9) Software Output Control Function in HT-PWM Mode

TSG3nOPT0.TSG3nSOC, TSG3nIDC, and TSG3nOPT1.TSG3nSPC2-TSG3nSPC0 are used in HT-PWM mode for software control of timer output control.

As shown in **Figure 25.68**, with TSG3nSTE = 0, the output control is switched immediately when TSG3nSOC is set to 1. If the dead time is set, the period of the dead time is guaranteed. After that, when TSG3nSOC is set to 0, output control is retained. When the reload timing is generated, output control is switched to HT-PWM mode output control.

For details, refer to **Section 25.4.7.8, Software Output Control Function**.

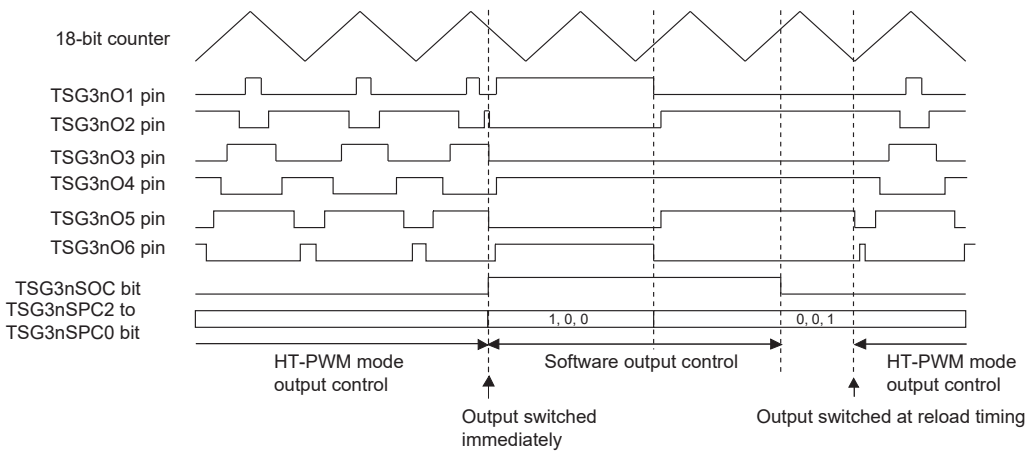

Figure 25.68 Example of Software Output Control Switching in HT-PWM Mode

CAUTION

Use reload (simultaneous rewrite) mode (TSG3nCTL3.TSG3nRMC = 0) when software output control function is used.

(a) Procedure for Software Output Control

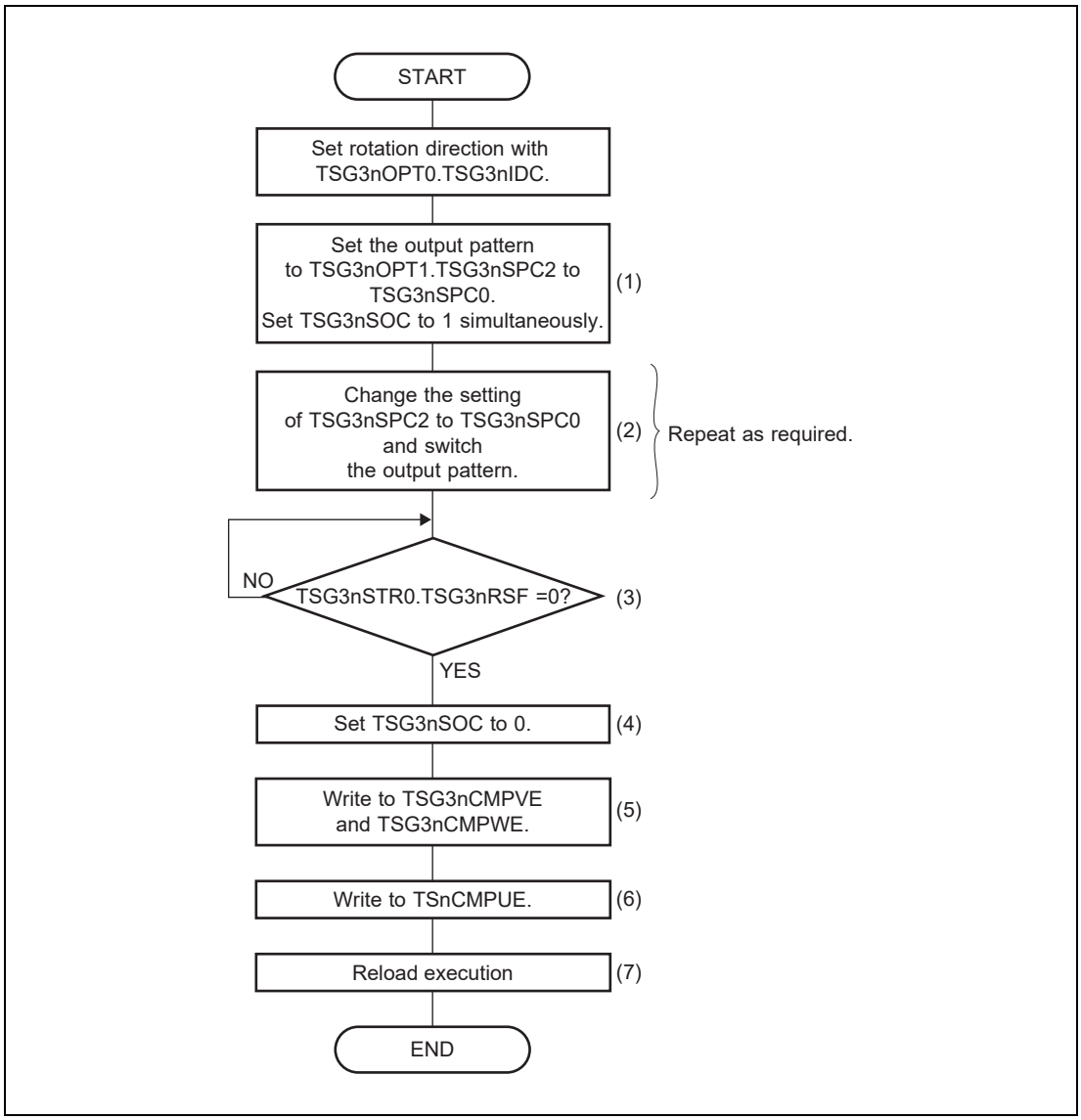

Figure 25.69 Flow of Software Output Control in HT-PWM Mode

The procedure for software output control is described below.

(1) Set the output pattern to the TSG3nOPT1.TSG3nSPC2-TSG3nSPC0. To enable software output control, set TSG3nOPT0.TSG3nSOC to 1 simultaneously.

(2) Change the output pattern setting of the TSG3nSPC2-TSG3nSPC0 to change the timer output.

(3) Confirm that reload request flag TSG3nSTR0.TSG3nRSF = 0. In case TSG3nRSF = 1, do not proceed to the following step until TSG3nRSF = 0.

(4) By setting TSG3nSOC = 0, the software control starts to be released (it is not released here yet).

(5) After releasing the software output control, set the necessary compare registers. Proceed to the following step when the register setting is not required. Here, change the registers with the reload function.

(6) Write to TSG3nCMPUE (TSG3nCMP1E) to start reloading.

(7) Reload is executed and software output is released.

CAUTION

Execute reload after executing steps (3), (4), (5), and (6). When reload cannot be executed, the software output cannot be released.

(10) Asymmetric Triangular Wave Control in HT-PWM Mode

In HT-PWM mode, it is possible to control output by an asymmetric triangular waveform by setting the different timings for setting and clearing the U, V, and W phases.

The following describes the differences of the asymmetric triangular wave control from the symmetric triangular wave control.

(a) PWM Setting

When a symmetric triangular wave is used, the output control of each of the U phase, V phase, and W phase is done by setting the set timing and the clear timing to the same value to the TSG3nCMPUE, TSG3nCMPVE, and TSG3nCMPWE. When an asymmetric triangular wave is used, the output control of each phase is done by setting TSG3nCMPmE as follows (m = 1, 2, 5, 6, 9, 10).

Prerequisites

- The clear timing of PWM of the voltage data signal of U, V and W phases is set with TSG3nCMP1E, TSG3nCMP5E, and TSG3nCMP9E.
- The set timing of PWM of the voltage data signal of U, V, and W phases is set with TSG3nCMP2E, TSG3nCMP6E, and TSG3nCMP10E.
- The set and clear timings of each phase can also be set with TSG3nCMP1E, TSG3nCMP2E, TSG3nCMP5E, TSG3nCMP5E, TSG3nCMP9E, and TSG3nCMP10E.
- TSG3nCMPmE can only be set to an even value (m = 1, 2, 5, 6, 9, 10).

(b) Timer Output

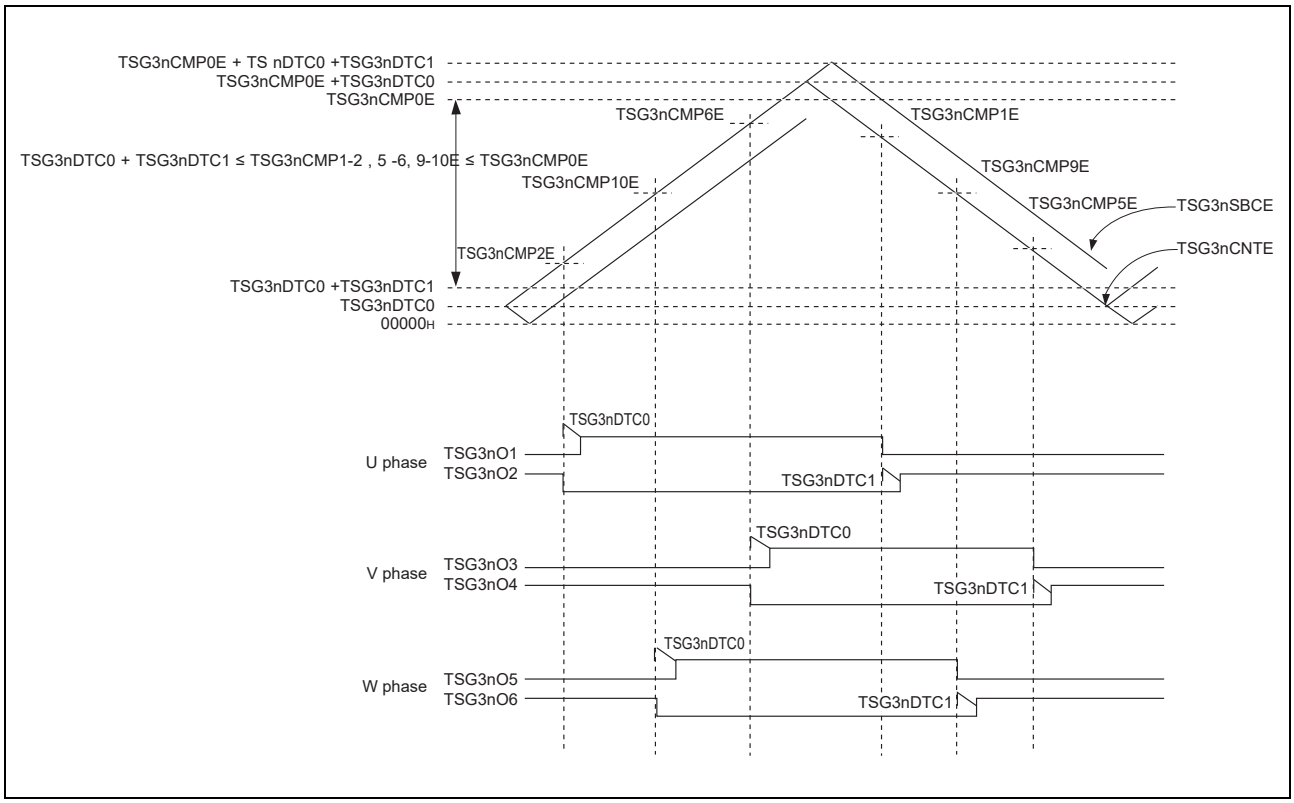

Figure 25.70 Example of Timer Output Waveform in HT-PWM Mode

NOTE

When output is controlled by the asymmetric triangular waveform, the following conditions apply to setting of TSG3nCMPmE (m = 1, 2, 5, 6, 9, 10).

- TSG3nDTC0+TSG3nDTC1 ≤ TSG3nCMPmE ≤ TSG3nCMP0E
- Only when TSG3nCMPmE = TSG3nCMP (m + 1) E, or TSG3nCMPmE = TSG3nCMP (m + 1) E + 2, it is possible to set TSG3nCMPmE under the condition 00000_H ≤ TSG3nCMPmE ≤ TSG3nCMP0E + TSG3nDTC0 + TSG3nDTC1, which also applies to the case where the symmetric triangular wave is used.

25.4.7.3 SP-PWM Mode (Shifted-pulse - Pulse Width Modulation Mode)

Overview

In this mode, a 6-phase PWM can be generated using the 18-bit counter and the 18-bit compare registers.

Prerequisites

- The PWM signal cycle is set in TSG3nCMP0E.
- The set timings of the U phase, V phase, and W phase are set with TSG3nCMP2E, TSG3nCMP6E, and TSG3nCMP10E, while the clear timings of these phases are set with TSG3nCMP1E, TSG3nCMP5E, and TSG3nCMP9E (when set timing and clear timing are used for control).
- The set timings of the U phase, V phase, and W phase are set with TSG3nCMP2E, TSG3nCMP6E, and TSG3nCMP10E while the active periods of these phases are set with TSG3nUPWE, TSG3nVPWE, and TSG3nWPWE. The sum of the set values of TSG3nCMP2E, TSG3nCMP6E, TSG3nCMP10E, and the set values of TSG3nUPWE, TSG3nVPWE, TSG3nWPWE are set to TSG3nCMP1E, TSG3nCMP5E, and TSG3nCMP9E respectively (when set timing and active period are used for control). The value after addition must be no greater than $3FFFF_H$. Truncate values having 19 or more bits.

Functional description

Set the carrier period and the set timings and duty of U phase, V phase, and W phase. The counting up begins when TSG3nTRG0.TSG3nTS is set to 1.

The 18-bit counter counts up from 00000_H and is cleared by match with TSG3nCMP0E.

The dead time is set with TSG3nDTC0 and TSG3nDTC1. TSG3nDTC0 sets the dead time of inverse phase (OFF) to positive phase (ON) switch while TSG3nDTC1 sets that of positive phase (OFF) to inverse phase (ON) switch. The 10-bit counters (TSG3nDTT1 to TSG3nDTT3) for dead time generation load the set values of TSG3nDTC0 and TSG3nDTC1 at compare match of the 18-bit counter with the TSG3nCMPmE buffer register (m = 1, 2, 5, 6, 9, 10) and start down-counting.

INTTSG3nIm interrupts (m = 1, 2, 5, 6, 9, 10) are generated by the compare match of the 18-bit counter with the TSG3nCMP1E, TSG3nCMP2E, TSG3nCMP5E, TSG3nCMP6E, TSG3nCMP9E, and TSG3nCMP10E buffer registers.

NOTE

SP-PWM mode is enabled when TSG3nCTL0.TSG3nMD2-TSG3nMD0 = 010_B.

(1) Basic Timing Chart

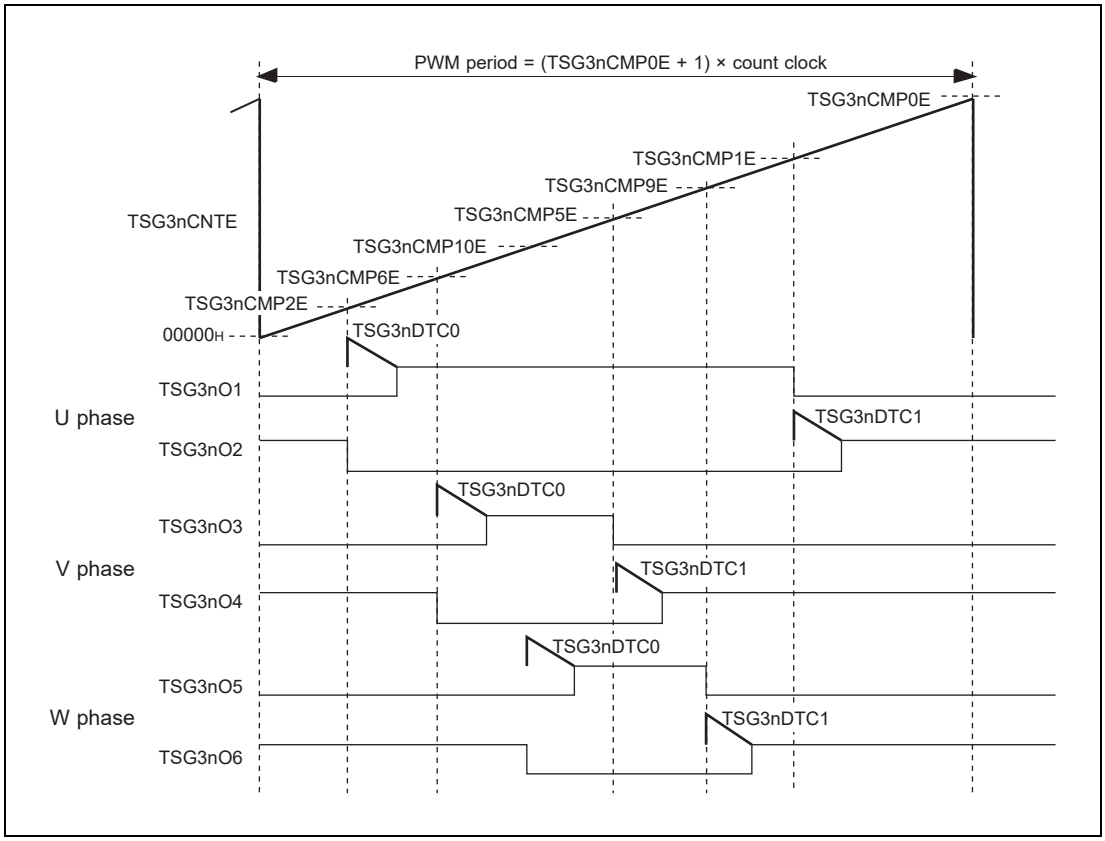

Figure 25.71 Basic Timing in SP-PWM Mode

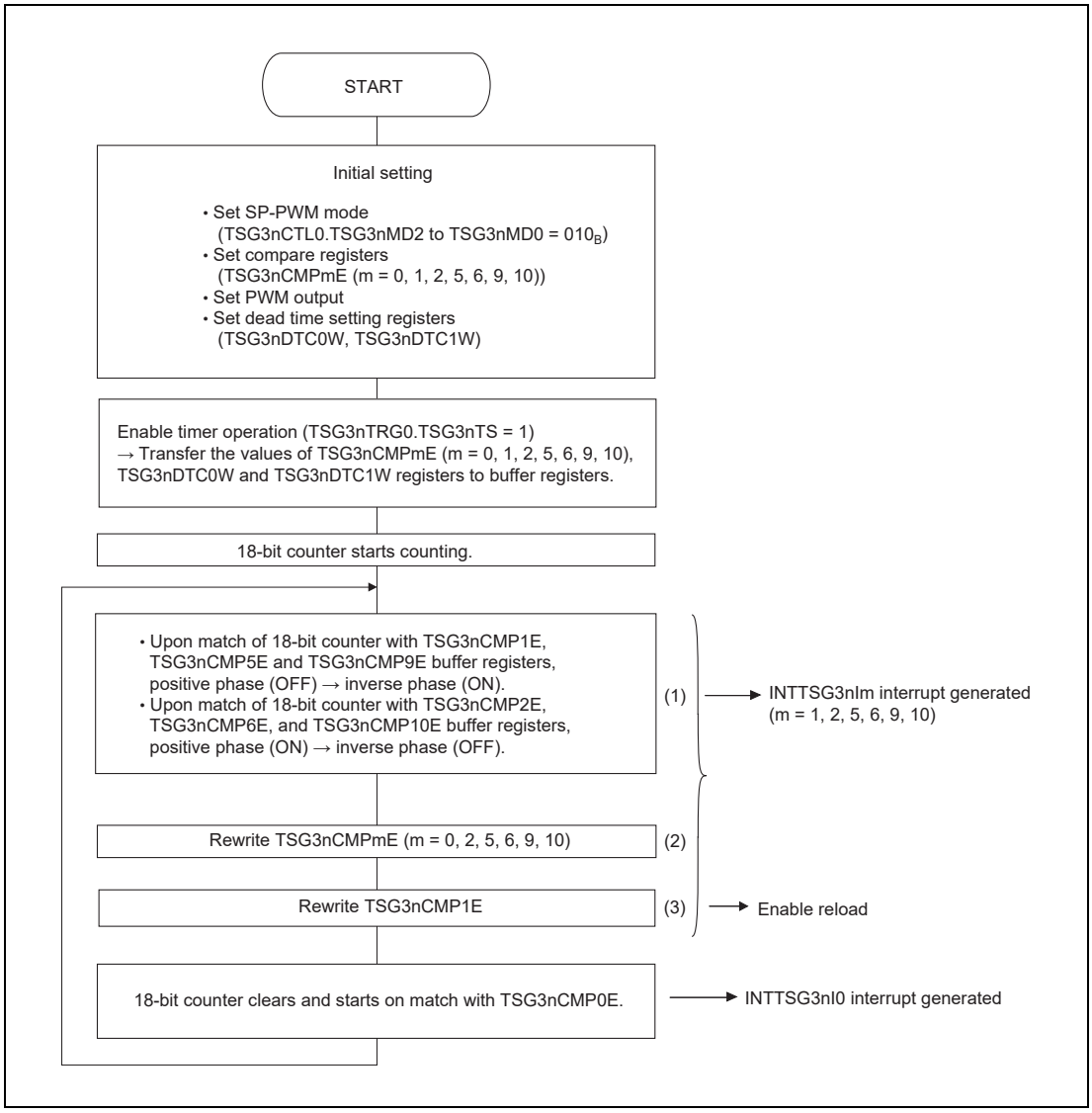

Figure 25.72 Basic Operation Flow in SP-PWM Mode

NOTE

The timing of (1) may be different depending on the rewriting timing of (2) and (3) and the TSG3nCMP1E value. Be sure to rewrite (2) followed by rewriting (3).

(2) List of SP-PWM Mode Operations

Table 25.68 Counter Functions in SP-PWM Mode

Operation		Setting Condition
18-bit counter	Start	TSG3nTRG0.TSG3nTS = 0 → 1 or simultaneous start trigger
	Clear	Compare match of TSG3nCMP0E buffer register with 18-bit counter
	Stop	TSG3nTRG1.TSG3nTT = 0 → 1

Table 25.69 Compare Registers and Dead Time Setting Register Functions in SP-PWM Mode

Register	Rewriting Method	Rewrite during Operation	Function
TSG3nCMP0E	Reload/Anytime rewrite	Possible	Setting period
TSG3nUPWE	Reload/Anytime rewrite	Possible	PWM control for U phase
TSG3nCMP1E, TSG3nCMP2E	Reload/Anytime rewrite		
TSG3nVPWE	Reload/Anytime rewrite	Possible	PWM control for V phase
TSG3nCMP5E, TSG3nCMP6E	Reload/Anytime rewrite		
TSG3nWPWE,	Reload/Anytime rewrite	Possible	PWM control for W phase
TSG3nCMP9E, TSG3nCMP10E	Reload/Anytime rewrite		
TSG3nDCMP0E, TSG3nDCMP1E, TSG3nDCMP2E	Reload/Anytime rewrite	Possible	Diagnostic output or A/D conversion trigger
TSG3nDTC0W, TSG3nDTC1W	Reload	Possible	Period and dead time

Table 25.70 Timer Input Function in SP-PWM Mode

Pin	Function
TSG3nCLKI	Clock enable input

Table 25.71 Output Functions in SP-PWM Mode

Pin	Function
TSG3nO1	PWM output with dead time by compare match of TSG3nCMP1E buffer register (clear timing) or TSG3nCMP2E buffer register (set timing) with 18-bit counter
TSG3nO2	Output inverse phase with respect to TSG3nO1 (with dead time)
TSG3nO3	PWM output with dead time by compare match of TSG3nCMP5E buffer register (clear timing) or TSG3nCMP6E buffer register (set timing) with 18-bit counter
TSG3nO4	Output inverse phase with respect to TSG3nO3 (with dead time)
TSG3nO5	PWM output with dead time by compare match of the TSG3nCMP9E buffer register (clear timing) or the TSG3nCMP10E buffer register (set timing) with the 18-bit counter
TSG3nO6	Output inverse phase with respect to TSG3nO5 (with dead time)
TSG3nO7	Diagnostic signal output or pulse output by A/D conversion trigger

Table 25.72 Interrupt Requests in SP-PWM Mode

Interrupt	Function
INTTSG3nIm (m = 0, 1, 2, 5, 6, 9, 10)	Compare match of TSG3nCMPmE buffer register with 18-bit counter (m = 0, 1, 2, 5, 6, 9, 10)
INTTSG3nIER	Error
INTTSG3nIVLY	—
INTTSG3nIPEK	Peak interrupt (generated at the same timing as INTTSG3nI0 interrupt)
INTTSG3nIWN	Warning

Table 25.73 Compare Match Timing in SP-PWM Mode

Compare Match	Timing
TSG3nCMP0E	When 18-bit counter changes from TSG3nCMP0E to 00000_H
TSG3nCMPmE (m = 1, 2, 5, 6, 9, 10)	After match of 18-bit counter and TSG3nCMPmE is detected (m = 1, 2, 5, 6, 9, 10)

Table 25.74 Example of Setting Each Timer Output Condition in SP-PWM Mode

Pin	Item	Output Period	Output Duty	
			Output Condition	Setting Condition
TSG3nO1, TSG3nO3, TSG3nO5	PWM output	(TSG3nCMP0E + 1) × count clock	Output an inactive level throughout one period (duty 0%)	TSG3nCMPmE = TSG3nCMP (m + 1) E or TSG3nCMP (m + 1) E > TSG3nCMP0E (m = 1, 5, 9)
			Output an active level of one count clock in one period	TSG3nCMPmE = TSG3nCMP (m + 1) E + 1 TSG3nCMP (m + 1) E = TSG3nCMPmE – 1 (m = 1, 5, 9)
			Output an inactive level of one count clock in one period	TSG3nCMPmE = TSG3nCMP (m + 1) E - 1 TSG3nCMP (m + 1) E = TSG3nCMPmE + 1 (m = 1, 5, 9)
			Output an active level throughout one period (duty 100%)	TSG3nCMPmE > TSG3nCMP0E TSG3nCMP (m + 1) E ≤ TSG3nCMP0E (m = 1, 5, 9)
TSG3nO2, TSG3nO4, TSG3nO6	PWM output	(TSG3nCMP0E + 1) × count clock	Output an inactive level throughout one period (duty 0%)	TSG3nCMP (m – 1) E > TSG3nCMP0E (m = 2, 6, 10)
			Output an active level of one count clock in one period	TSG3nCMPmE = TSG3nCMP (m – 1) E - 1 TSG3nCMP (m – 1) E = TSG3nCMPmE + 1 (m = 2, 6, 10)
			Output an inactive level of one count clock in one period	TSG3nCMPmE = TSG3nCMP (m – 1) E + 1 TSG3nCMP (m – 1) E = TSG3nCMPmE – 1 (m = 2, 6, 10)
			Output an active level throughout one period (duty 100%)	TSG3nCMPmE = TSG3nCMP(m – 1)E or TSG3nCMPmE > TSG3nCMP0E (m = 2, 6, 10)
TSG3nO7	Diagnostic signal output or pulse output by A/D conversion trigger	(TSG3nCMP0E + 1) × count clock	Please refer to **Section 25.4.5, A/D Conversion Trigger Function**.	

(3) Various Settings of SP-PWM Mode

Mode setting

SP-PWM mode is entered by setting TSG3nCTL0.TSG3nMD2-TSG3nMD0 to 010_B.

Setting timer output

The output pins TSG3nO1-TSG3nO6 are controlled by setting TSG3nIOC0, TSG3nIOC2, and TSG3nIOC3.

The TSG3nO7 pin provides output pulse as diagnostic output or A/D conversion trigger. The pin should be set as necessary.

Enabling error interrupt generation

Error interrupt (INTTSG3nIER) due to the detection of the simultaneous active state of the positive and inverse phases is enabled by setting TSG3nIOC1.TSG3nEOC to 1. For details, refer to **Section 25.4.6, Error/Warning Interrupt**.

Setting rewriting timing of register with reload function

With the TSG3nCTL3.TSG3nRMC, reload (simultaneous rewrite) or rewrite (anytime) is specified for the registers with reload function. The default setting is 0 (reload). To reload, set TSG3nCTL4.TSG3nPRE to 1.

No reload timing is generated when TSG3nPRE = 0.

When “anytime rewrite” is specified, the unintended output may be generated depending on the rewrite timing.

Setting A/D conversion trigger output

The A/D conversion trigger 0 (TSG3nADTRG0 signal) is set with TSG3nCTL5.TSG3nAT09 to TSG3nAT00.

TSG3nAT09 to TSG3nAT00 is used to enable or disable the A/D conversion trigger output on timing match of TSG3nDCMP2E to TSG3nDCMP0E with the 18-bit counter (up count).

TSG3nCTL6.TSG3nAT19 to TSG3nAT10 is used to set the A/D conversion trigger 1 (TSG3nADTRG1 signal).

To set the match timing of the 18-bit counter and TSG3nDCMP2E to TSG3nDCMP0E, set the compare value to each register.

The skipping function can be used for TSG3nADTRG0 and TSG3nADTRG1 signals. TSG3nACC00 and TSG3nACC01 of TSG3nCTL5, and TSG3nACC10 and TSG3nACC11 of TSG3nCTL6 can be used to select the skipping rate among 1/1, 1/2, 1/4, and 1/8.

CAUTION

- **Be sure to set TSG3nCTL5, TSG3nCTL6, and TSG3nDCMP2E to TSG3nDCMP0E correctly when the timing pulse of A/D conversion trigger is output to TSG3nO7.**
- **In SP-PWM mode, no valley interrupt (INTTSG3nIVLY) is generated. Therefore, TSG3nCTL5.TSG3nAT00 and TSG3nCTL6.TSG3nAT10 must be set to 0.**
- **In SP-PWM mode, the 18-bit sub-counter does not operate. Therefore, TSG3nAT09, and TSG3nAT08 in TSG3nCTL5, and TSG3nAT19, and TSG3nAT18 in TSG3nCTL6 must be set to 0.**

- **In SP-PWM mode, down counting by the 18-bit counter is not generated. Therefore, TSG3nAT07, TSG3nAT05, and TSG3nAT03 in TSG3nCTL5 and TSG3nAT17, TSG3nAT15, and TSG3nAT13 in TSG3nCTL6 should be set to 0.**

Setting dead time

The dead time can be set with TSG3nDTC0 and TSG3nDTC1.

The dead time is calculated by the following expressions:

PCLK × TSG3nDTC0

PCLK × TSG3nDTC1

TSG3nDTC0 can set the time between a change of TSG3nO2, TSG3nO4, and TSG3nO6 to the inactive state and a change of TSG3nO1, TSG3nO3, and TSG3nO5 to the active state, respectively.

TSG3nDTC1 can set the time between a change of TSG3nO1, TSG3nO3, and TSG3nO5 to the inactive state, and a change of TSG3nO2, TSG3nO4, and TSG3nO6 to the active state, respectively.

Carrier period

Set the carrier period with TSG3nCMP0E according to the following expression:

TSG3nCMP0E = (carrier period/count clock period) – 1

CAUTION

PWM output with 100% duty cannot be produced when TSG3nCMP0E = $3FFFF_H$.

Setting duty (PWM width)

The duty of U phase, V phase, and W phase is set with TSG3nCMPmE, TSG3nUPWE, TSG3nVPWE, and TSG3nWPWE (m = 1, 2, 5, 6, 9, 10), respectively.

- The set timings of the U phase, V phase, and W phase are set with TSG3nCMP2E, TSG3nCMP6E, and TSG3nCMP10E, and the clear timings are set with TSG3nCMP1E, TSG3nCMP5E, and TSG3nCMP9E. (The set and clear timing setting is used for control.)
- The set timings of U phase, V phase, and W phase is set with TSG3nCMP2E, TSG3nCMP6E, and TSG3nCMP10E while the active periods of these phases are set with TSG3nUPWE, TSG3nVPWE, and TSG3nWPWE.
  The sum of the set values of TSG3nCMP2E, TSG3nCMP6E, and TSG3nCMP10E, and the set values of TSG3nUPWE, TSG3nVPWE, and TSG3nWPWE are set to TSG3nCMP1E, TSG3nCMP5E, and TSG3nCMP9E respectively (when set timing and active period are used for control).

(4) Dead Time Control in SP-PWM mode

Duty setting registers are TSG3nCMPmE (m = 1, 2, 5, 6, 9, 10), TSG3nUPWE, TSG3nVPWE, and TSG3nWPWE and register for setting the period is TSG3nCMP0E. The 6-phase PWM waveform of a variable duty is output by using these registers. To achieve the dead time control, there are six 10-bit down counters that operate synchronously with the count clock of the 18-bit counter and two dead time setting registers (TSG3nDTC0W and TSG3nDTC1W). TSG3nDTC0W is used for setting a dead time from a change of the inverse phase to the inactive state to a change of the positive phase to the active state. TSG3nDTC1W is used for setting a dead time from a change of the positive phase to the inactive state to a change of the inverse phase to the active state.

Dead time counter keeps operating even when operation stop (TSG3nTE = 0) setting collided with dead time insert timing, and the dead time set in TSG3nO1 and TSG3nO2 are always inserted.

The following figure shows an example of the output waveform.

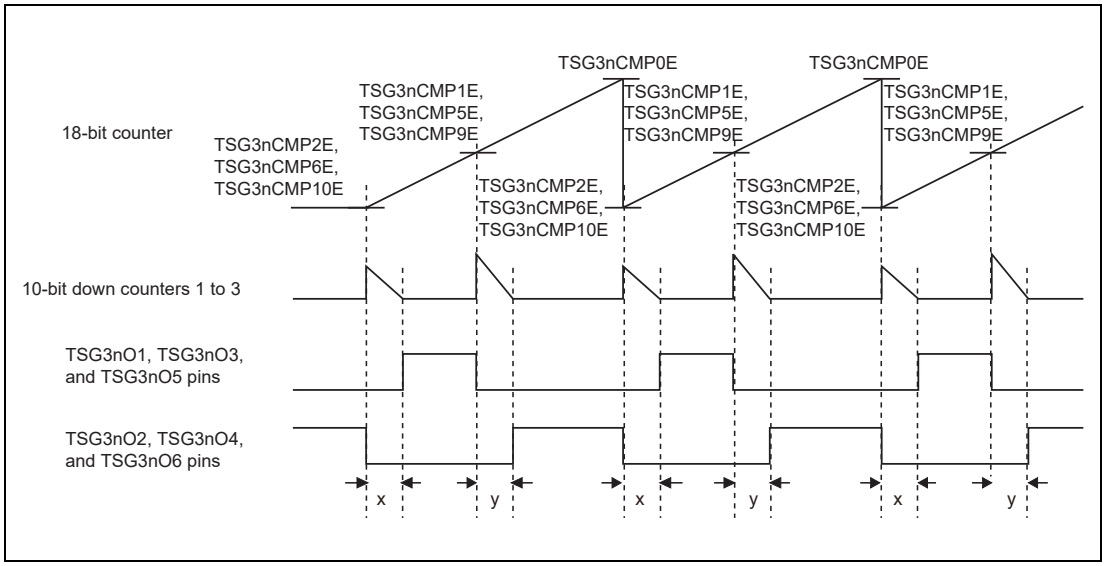

Figure 25.73 Example of Output Waveform in SP-PWM Mode

NOTE

x: TSG3nDTC0 register values, y: TSG3nDTC1 register values

(5) Software Output Control Function in SP-PWM Mode

TSG3nOPT0.TSG3nSOC, TSG3nIDC, and TSG3nOPT1.TSG3nSPC2 to TSG3nSPC0 are used to control timer output by software.

As shown in **Figure 25.74**, the output control is switched immediately when TSG3nSOC is set to 1. If the dead time is set, the period of the dead time is guaranteed. After that, when TSG3nSOC is set to 0, output control is retained. When the reload timing is generated, output control is switched to SP-PWM mode output control.

For details, refer to **Section 25.4.7.8, Software Output Control Function**.

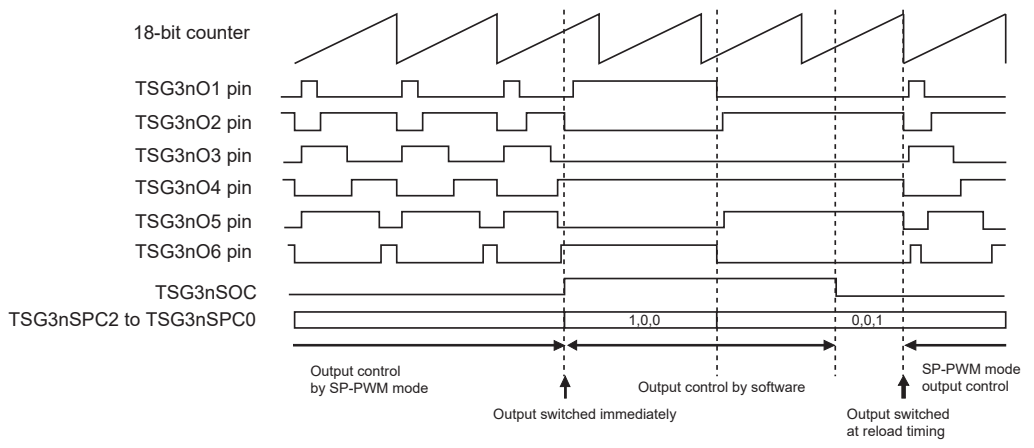

Figure 25.74 Example of Output Control Switching from SP-PWM Mode Control to Software Control

(a) Procedure on Software Output Control Processing

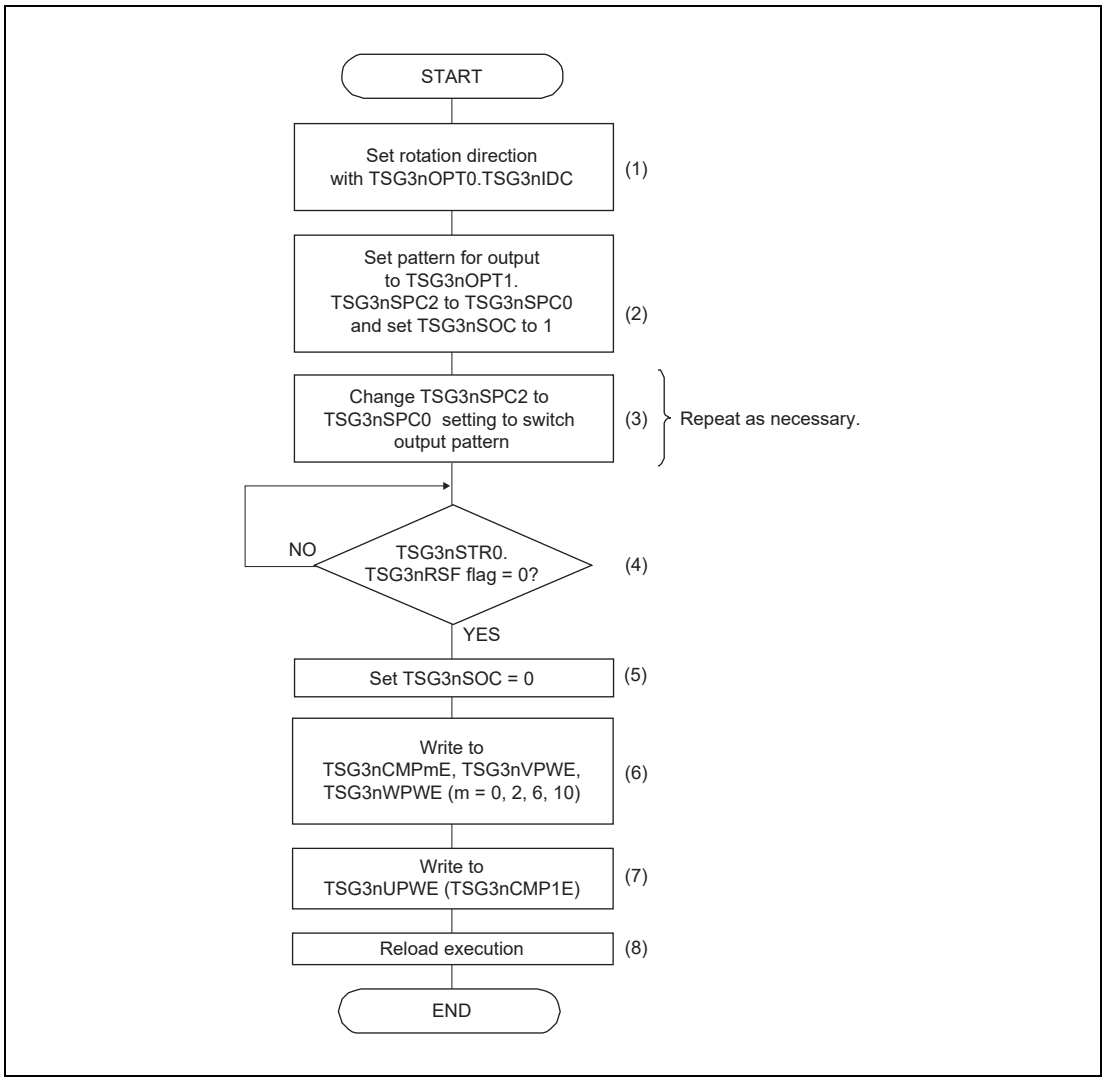

Figure 25.75 Flow of Software Output Control

The procedure for software output control is described below.

(1) Set TSG3nIDC to determine the electric current direction. The timer output has a 180-degree phase shift between when TSG3nIDC = 0 and when TSG3nIDC = 1. When this bit is rewritten with the software output control function, the output pattern will change according to the new setting at the next timer cycle.

(2) Set the pattern for output to TSG3nSPC2-0. At the same time, set TSG3nSOC to 1 to switch to software output control mode.

(3) Change the output pattern setting for TSG3nSPC2-0 to change the timer output.

(4) Ensure that the reload request flag TSG3nRSF is 0. If TSG3nRSF is 1, do not shift to the following procedure until it goes 0.

(5) By clearing TSG3nSOC to 0, software control starts to be released (not yet released here).

(6) After software output control is released, set the compare registers if necessary. Move to the following procedure if no setting is required. In addition, change the registers with the reload function if necessary.

(7) Write TSG3nUPWE (TSG3nCMP1E) to start reloading.

(8) Reload is executed and software output control is released.

CAUTION

Be sure to execute reload after execution of steps (4), (5), (6), and (7). Unless reload can be executed, software output control cannot be released

25.4.7.4 120-DC Mode

Overview

In this mode, PWM output period set to TSG3nCMP0E and timer output (TSG3nO1 to TSG3nO6) according to the duty cycle set to TSG3nCMP1E to TSG3nCMP12E are controlled with three types of pattern inputs (software output control method, pattern switch method, and trigger switch method) to perform 120-DC control.

Prerequisites

- Set the PWM period to TSG3nCMP0E.
- Set the PWM duty to TSG3nCMP1E to TSG3nCMP12E and set the output pattern to TSG3nPAT0W and TSG3nPAT1W.

Functional description

Set the PWM period, set the duty cycle to individual compare register, and set the pattern to be output to the pattern register. Setting TSG3nTRG0.TSG3nTS to 1 starts counting.

The 18-bit counter starts counting from 00000_H, and is cleared by the match with TSG3nCMP0E.

INTTSG3nI1 to INTTSG3nI12 interrupts are generated by a compare match of the 18-bit counter and TSG3nCMP1E to TSG3nCMP12E buffer registers, respectively.

NOTE

120-DC mode is valid when TSG3nCTL0.TSG3nMD2-TSG3nMD0 = 011_B.

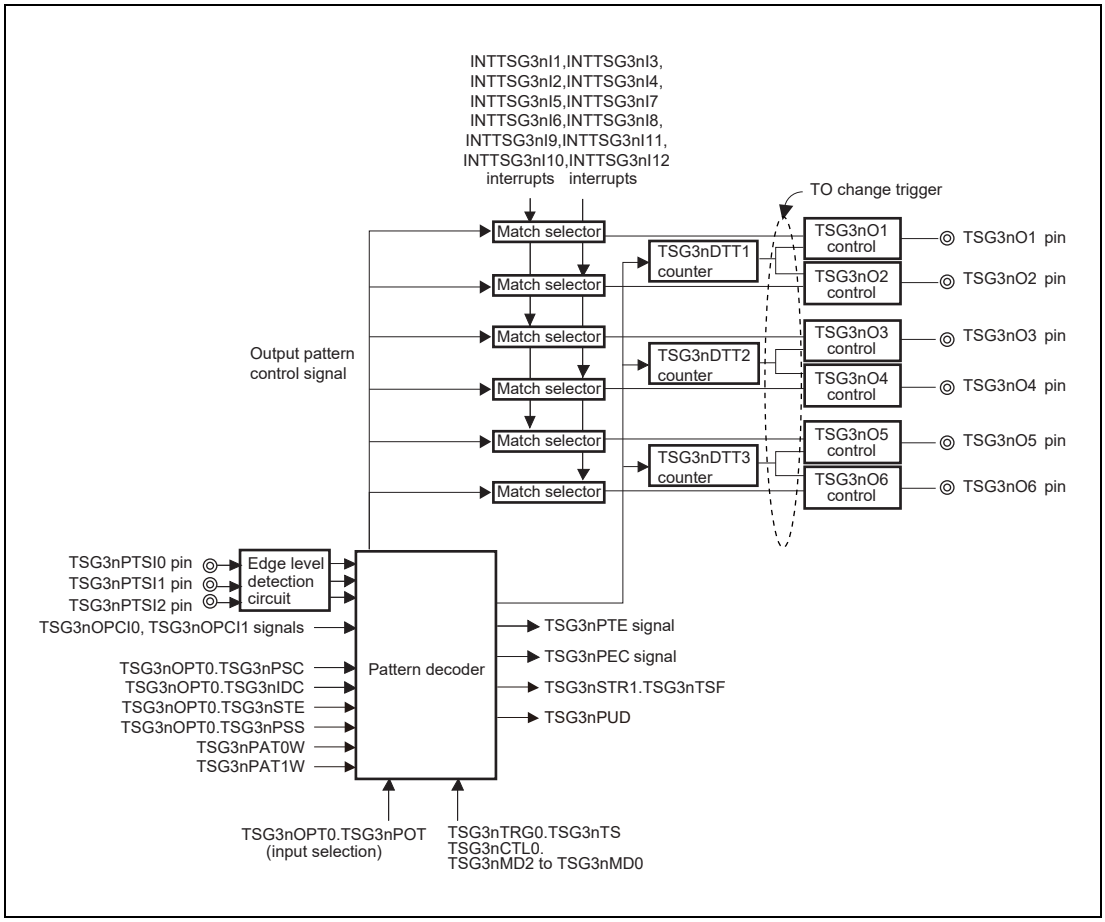

Figure 25.76 Block Diagram in 120-DC Mode

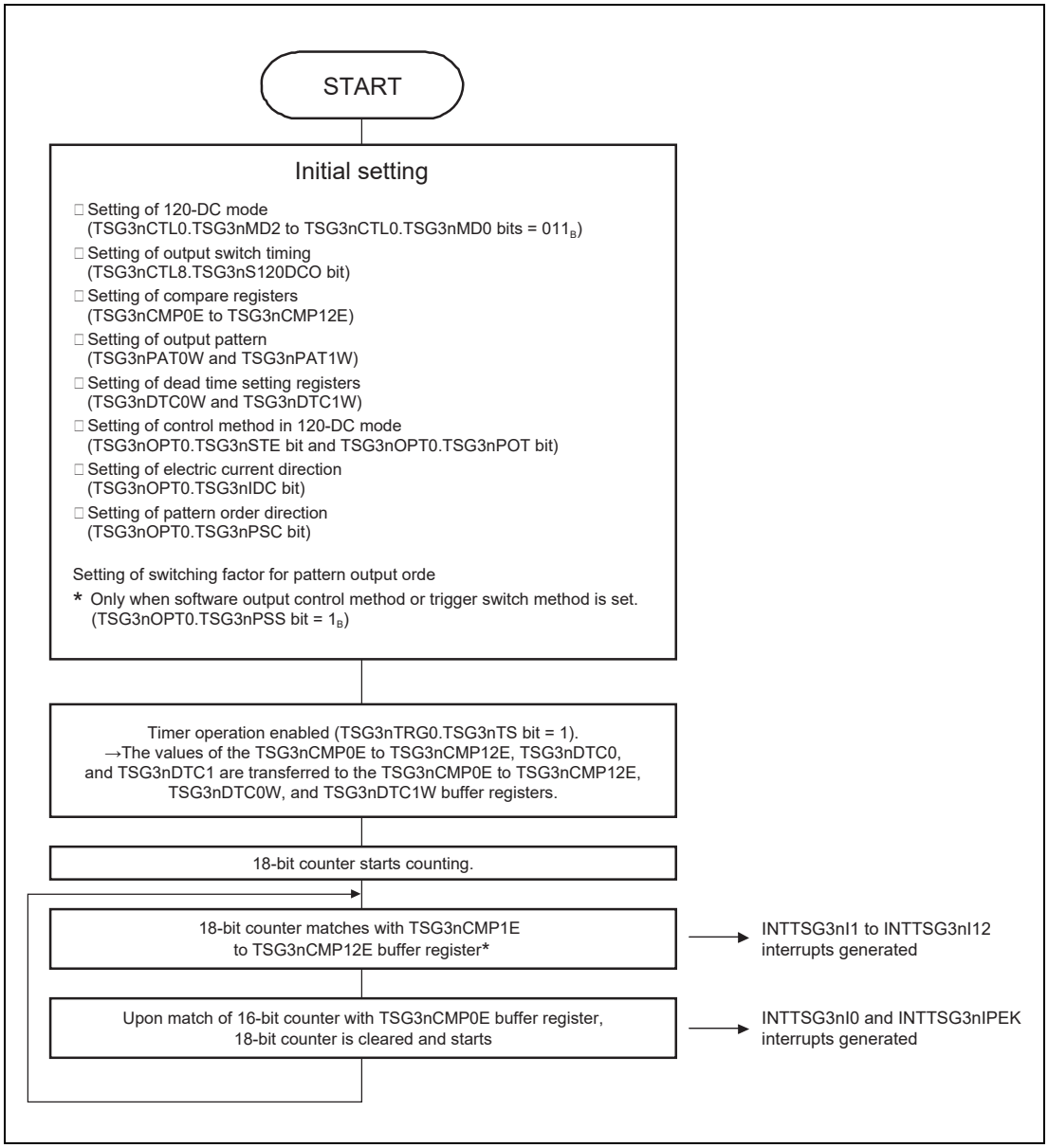

Figure 25.77 Basic Operation Flow in 120-DC Mode

NOTE

The 18-bit counter is not cleared by match of the 18-bit counter with the TSG3nCMP1E to TSG3nCMP12E buffer registers

(1) List of Operations in 120-DC Mode

Table 25.75 Counter Functions in 120-DC Mode

Operation		Setting Condition
18-bit counter	Start	TSG3nTRG0.TSG3nTS = 0 → 1 or simultaneous start trigger
	Clear	When TSG3nCTL8.TSG3nS120DCO is 0: timing of a match of TSG3nCMP0E value and 18-bit counter value or output pattern switch When TSG3nCTL8.TSG3nS120DCO is 1: timing of a match of TSG3nCMP0E value with 18-bit counter value
	Stop	TSG3nTRG1.TSG3nTT = 0 → 1

Table 25.76 Functions of Compare Registers and Dead Time Setting Registers in 120-DC Mode

Register	Rewrite Method	Rewrite during Operation	Function
TSG3nCMP0E	Reload	Possible	Setting period
TSG3nCMPmE (m = 1-12)	Reload	Possible	Setting PWM duty
TSG3nDCMP0E, TSG3nDCMP1E, TSG3nDCMP2E	Reload	Possible	Outputting diagnostic signal or setting A/D conversion trigger
TSG3nDTC0W, TSG3nDTC1W	Reload	Possible	Setting dead time

Table 25.77 Timer Input Function in 120-DC Mode

Pin/Signal	Function
TSG3nCLKI pin	Clock enable input
TSG3nPTSI2-TSG3nPTSI0 pins	Pattern input (3 phases)
TSG3nOPCI0, TSG3nOPCI1 signals	Trigger input

Table 25.78 Timer Output Function in 120-DC Mode

Pin/Signal	Function
TSG3nO1 pin	PWM output (with dead time) according to a compare match of the TSG3nCMPmE buffer register (m = 1, 2, 5, 6, 9, 10) with the 18-bit counter and output pattern selected by TSG3nPAT0W setting.
TSG3nO2 pin	PWM output (with dead time) according to a compare match of the TSG3nCMPmE buffer register (m = 3, 4, 7, 8, 11, 12) with the 18-bit counter and output pattern selected by TSG3nPAT1W setting.
TSG3nO3 pin	PWM output (with dead time) according to a compare match of the TSG3nCMPmE buffer register (m = 1, 2, 5, 6, 9, 10) with the 18-bit counter and output pattern selected by TSG3nPAT0W setting.
TSG3nO4 pin	PWM output (with dead time) according to a compare match of the TSG3nCMPmE buffer register (m = 3, 4, 7, 8, 11, 12) with the 18-bit counter and output pattern selected by TSG3nPAT1W setting.
TSG3nO5 pin	PWM output (with dead time) according to a compare match of the TSG3nCMPmE buffer register (m = 1, 2, 5, 6, 9, 10) with the 18-bit counter and output pattern selected by TSG3nPAT0W setting.
TSG3nO6 pin	PWM output (with dead time) according to a compare match of the TSG3nCMPmE buffer register (m = 3, 4, 7, 8, 11, 12) with the 18-bit counter and output pattern selected by TSG3nPAT1W setting.
TSG3nO7 pin	Diagnostic signal output or pulse output by A/D conversion trigger
TSG3nPTE signal	Toggle signal by change in input pattern

Table 25.79 Interrupt Requests in 120-DC Mode

Interrupt	Function
INTTSG3nIm (m = 0 to 12)	Compare match of TSG3nCMPmE buffer register and 18-bit counter (m = 0 to 12)
INTTSG3nIER	Error
INTTSG3nIVLY	—
INTTSG3nIPEK	Peak interrupt (generated at the same timing as INTTSG3nI0)
INTTSG3nIWN	Warning interrupt

Table 25.80 Compare Match Timing in 120-DC Mode

Compare Match	Timing
TSG3nCMP0E	When 18-bit counter changes from TSG3nCMP0E to 00000_H
TSG3nCMPmE (m = 1 to 12)	After detecting the match of 18-bit counter and TSG3nCMPmE (m = 1 to 12)

Table 25.81 Example of Setting Each Timer Output Condition in 120-DC Mode

Pin	Item	Output Period	Output Duty	
			Output Condition	Setting Condition
TSG3nOm (m = 1 to 6)	PWM output	(TSG3nCMP0E + 1) × count clock	See **(6), List of Output Patterns in 120-DC Mode**.	—
TSG3nO7	Diagnostic signal output or pulse output by A/D conversion trigger	(TSG3nCMP0E + 1) × count clock	See **Section 25.4.5, A/D Conversion Trigger Function**.	—

(2) Various Settings of 120-DC Mode

Mode setting

120-DC mode is entered by setting TSG3nCTL0.TSG3nMD2-TSG3nMD0 to 011_B.

Setting timer output

The output pins TSG3nO1 to TSG3nO6 are controlled by setting TSG3nIOC0, TSG3nIOC2, and TSG3nIOC3.

The TSG3nO7 pin outputs pulses of the diagnostic output or the A/D conversion trigger. Please set it as required.

Enabling error interrupt generation

With TSG3nIOC1.TSG3nEOC = 1, the error interrupt (INTTSG3nIER) generation is enabled when the simultaneous active state of the positive phase and inverse phase is detected. For details, see **Section 25.4.6, Error/Warning Interrupt**.

Setting register rewrite timing

Reloading the registers with the reload function is activated with TSG3nCTL3.TSG3nRMC (simultaneous rewrite; default setting is 0 = reload). Set TSG3nCTL4.TSG3nPRE to 1 when reload is used.

The reload timing is not generated if TSG3nPRE is 0.

Setting A/D conversion trigger output

To set A/D conversion trigger 0 (TSG3nADTRG0 signal), use TSG3nCTL5.TSG3nAT09 to TSG3nAT00.

With TSG3nAT09 to TSG3nAT00, A/D conversion trigger output is enabled or disabled at the match of the 18-bit counter and TSG3nDCMP2E to TSG3nDCMP0E (during up count).

To set A/D conversion trigger 1 (TSG3nADTRG1 signal), use TSG3nCTL6.TSG3nAT19 to TSG3nAT10.

To set the match timing of the 18-bit counter and TSG3nDCMP2E to TSG3nDCMP0E, set the compare value to the pertinent register.

The skipping function can be used for TSG3nADTRG0 and TSG3nADTRG1 signals. Use TSG3nACC01, TSG3nACC00 of TSG3nCTL5 and TSG3nACC11, and TSG3nACC10 in TSG3nCTL6 to select the skipping rate among 1/1, 1/2, 1/4, and 1/8.

CAUTION

- **Set TSG3nCTL5, TSG3nCTL6, and TSG3nDCMP2E to TSG3nDCMP0E correctly when using the TSG3nO7 output for the A/D conversion trigger timing pulse.**
- **In 120-DC mode, a valley interrupt (INTTSG3nIVLY) is not generated. Therefore, set TSG3nAT00 and TSG3nAT10 in TSG3nCTL5 and TSG3nCTL6 to 0.**
- **In 120-DC mode, the 18-bit sub-counter does not operate. Therefore, set TSG3nAT09, TSG3nAT08, TSG3nAT19, and TSG3nAT18 in TSG3nCTL5 and TSG3nCTL6 to 0.**
- **In 120-DC mode, the 18-bit counter does not decrement. Therefore, set TSG3nAT07, TSG3nAT05, TSG3nAT03, TSG3nAT17, TSG3nAT15, and TSG3nAT13**

in TSG3nCTL5 and TSG3nCTL6 to 0.

Setting dead time

The dead time can be set with TSG3nDTC0 and TSG3nDTC1.

The dead time is calculated by the following expressions

PCLK × TSG3nDTC0

PCLK × TSG3nDTC1

TSG3nDTC0 can set the time between a change of TSG3nO2, TSG3nO4, and TSG3nO6 to the inactive state and a change of TSG3nO1, TSG3nO3, and TSG3nO5 to the active state, respectively.

TSG3nDTC1 can set the time between a change of TSG3nO1, TSG3nO3, and TSG3nO5 to the inactive state to a change of TSG3nO2, TSG3nO4, and TSG3nO6 to the active state.

Carrier period

Set the carrier period with TSG3nCMP0E according to the following expression:

TSG3nCMP0E = (carrier period/count clock period) – 1

Duty (PWM width) setting

The duty of PWM output is set with TSG3nCMP1E to TSG3nCMP12E. The setting range of the compare registers is as follows:

$00000_H \leq$ TSG3nCMPmE $\leq$ TSG3nCMP0E + 1

CAUTION

Do not set TSG3nCMPmE = TSG3nCMP0E + 1 (m = 1 to 12) only when TSG3nCMP0E + 1 < TSG3nCMPmE, and TSG3nCMP0E = $3FFFF_H$.

Output PWM setting

In 120-DC mode, the output pins TSG3nO1, TSG3nO3, and TSG3nO5 are controlled by TSG3nCMP1E, TSG3nCMP2E, TSG3nCMP5E, TSG3nCMP6E, TSG3nCMP9E, and TSG3nCMP10E, and the output pins TSG3nO2, TSG3nO4, TSG3nO6 are controlled by TSG3nCMP3E, TSG3nCMP4E, TSG3nCMP7E, TSG3nCMP8E, TSG3nCMP11E, and TSG3nCMP12E. The duty cycle of a PWM period (TSG3nCMP0E) can be set with TSG3nCMP1E to TSG3nCMP12E. Setting TSG3nCMP1E to TSG3nCMP12E to 00000_H sets the PWM duty cycle to 0%. Setting TSG3nCMP1E to TSG3nCMP12E to TSG3nCMP0E + 1 value sets the PWM duty cycle to 100%. This allows chopping output control and rectangular wave output control.

(3) Control Methods in 120-DC Mode

Control methods in 120-DC mode are listed below.

Table 25.82 Control Method in 120-DC Mode

Control Method	Function
Software output control method	Switches the output pattern according to the TSG3nOPT1.TSG3nSPC2 to TSG3nSPC0 setting made by software.
Pattern switch method	Switches the output pattern by the pattern input signal of TSG3nPTSI0 to TSG3nPTSI2.
Trigger switch method	Switches the output pattern by the trigger switch method using the trigger input signals TSG3nOPCI0 and TSG3nOPCI1 or by the pattern input setting of TSG3nOPT1.TSG3nSPC2 to TSG3nSPC0 in the constant order.

Switch timing of timer output when changing input pattern of 120-DC mode can be set by TSG3nCTL8.TSG3nS120DCO.

Table 25.83 Setting of TSG3nS120DCO and Operation in 120-DC Mode

TSG3nS120DCO	Function
0	When input patterns are changed, the main counter (TSG3nCNTE) is cleared and the change of patterns is immediately reflected to timer output.
1	When input patterns are changed, the change of input patterns is reflected to timer output from the next timer cycle (after a match of the main counter (TSG3nCNTE) with TSG3nCMP0E).

Setting software output control method

Setting TSG3nOPT0.TSG3nSTE = 0 switches the output pattern by software output control. The TSG3nO1 to TSG3nO6 pin output is switched according to TSG3nOPT1.TSG3nSPC2 to TSG3nSPC0.

The pattern output order at the beginning of operation is set with TSG3nOPT0.TSG3nIDC and TSG3nOPT0.TSG3nPSC.

Operation of software output control method

The PWM output of TSG3nO1 to TSG3nO6 pins (PWM output defined by TSG3nCMP1E to TSG3nCMP12E) is selected by TSG3nOPT1.TSG3nSPC2 to TSG3nSPC0 by software. To control the dead time, the dead time counter is activated at the falling edge of the signals in each phase and the dead time is inserted.

The 18-bit counter counts based on the carrier period set in TSG3nCMP0E. The 18-bit counter is cleared by match of the 18-bit counter and TSG3nCMP0E or by a write access to TSG3nOPT1.TSG3nSPC2 to TSG3nSPC0 (when TSG3nS120DCO = 0).

In this method, the pattern is output, which is decoded using information on the output pattern (TSG3nSPC2 to TSG3nSPC0), the electric current direction control bit (TSG3nOPT0.TSG3nIDC), and order detection control bit (TSG3nOPT0.TSG3nPSC). **Figure 25.98** shows the timer output when the output pattern is changed by software output control.

Immediately after the operation starts (TSG3nTRG0.TSG3nTS = 1), the output pattern of TSG3nSPC2 to TSG3nSPC0 and the pattern set with TSG3nIDC and TSG3nPSC (TSG3nOPT0.TSG3nPSS = 1) are output.

Setting pattern switch method

Setting TSG3nOPT0.TSG3nSTE to 1 and TSG3nPOT to 0 selects the pattern switch method. The TSG3nO1 to TSG3nO6 pin output pattern is changed at the change timing of the TSG3nPTSI2 to TSG3nPTSI0 pins.

The output pattern at the beginning of operation is set with TSG3nOPT0.TSG3nIDC and with TSG3nOPT0.TSG3nPSC. However, after determining the rotation direction (after the value is set to TSG3nSTR1.TSG3nTSF), the setting of TSG3nPSC is disabled.

Operation of pattern switch method

After level detection is performed for the pins (three inputs from the hall sensor), the level-detected signals are decoded. From the decoding result, the PWM output of TSG3nO1 to TSG3nO6 pins (PWM output defined by TSG3nCMP1E to TSG3nCMP12E) is selected. To control the dead time, the dead time counter is activated at the falling timing of signals in each phase and the dead time is inserted.

The 18-bit counter is cleared by a match of the 18-bit counter value with the TSG3nCMP0E value or by a change of the input pattern (TSG3nPTSI2 to TSG3nPTSI0 pins) while TSG3nS120DCO is 0.

In this method, the pattern, which is decoded by using information on input pattern (TSG3nPTSI2 to TSG3nPTSI0), the electric current direction control bit (TSG3nOPT0.TSG3nIDC), and TSG3nPTSI2 to TSG3nPTSI0 pattern order detection flag (TSG3nSTR1.TSG3nTSF), is output. **Figure 25.80** to **Figure 25.83** show the timer output when TSG3nPTSI2 to TSG3nPTSI0 pin inputs change.

Immediately after the operation starts (TSG3nTRG0.TSG3nTS = 1), the output pattern set by the levels input on the TSG3nPTSI2 to TSG3nPTSI0 pins and by the TSG3nIDC and TSG3nPSC bits is produced. If a level on any of the TSG3nPTSI2 to TSG3nPTSI0 pins is changed, TSG3nTSF is determined by the direction of the change to the sequence. After the TSG3nTSF value is determined, the pattern set by the TSG3nTSF bit replaces that set by the TSG3nPSC bit.

CAUTION

When connecting the three-phase pulse input signal to the TSG3nPTSI2 to TSG3nPTSI0 pins, confirm that the three-phase pulse input value and the patterns output from the TSG3nO1 to TSG3nO6 pins satisfy the expected conditions.
If the expected conditions are not satisfied, change the connection between the three-phase pulse input signal and the TSG3nPTSI2 to TSG3nPTSI0 pins.

Setting trigger switch method

Setting TSG3nOPT0.TSG3nSTE and TSG3nPOT to 1 selects the trigger switch method. The output pins TSG3nO1 to TSG3nO6 are changed at a rising edge of an external input (TSG3nOPCI1 and TSG3nOPCI0 signals).

For pattern output order, see **Section 25.4.7.4**, **(5) Operation in 120-DC Mode**.

The initial output pattern can be controlled with TSG3nOPT1.TSG3nSPC2 to TSG3nSPC0.

When starting the TSG3n operation (TSG3nTRG0.TSG3nTS = 1) after setting TSG3nSPC2 to TSG3nSPC0, the initial pattern is output. For details, see **Section 25.4.7.4**, **(6) List of Output Patterns in 120-DC Mode**.

Operation of trigger switch method

With the trigger input switch method, the rising edges of the TSG3nOPCI0 and TSG3nOPCI1 signals are detected and the output switch timing is generated. The initial timer output pattern is set with TSG3nOPT1.TSG3nSPC2 to TSG3nSPC0. The subsequent output patterns are switched after rising of the TSG3nOPCI0 and TSG3nOPCI1 signals is detected. Furthermore, the output patterns can be switched by setting TSG3nOPT1.TSG3nSPC2 to TSG3nOPT1.TSG3nSPC0.

The 18-bit counter counts based on the carrier period set in TSG3nCMP0E. The 18-bit counter is cleared by match of the 18-bit counter and TSG3nCMP0E, by a write access to TSG3nOPT1.TSG3nSPC2 to TSG3nSPC0, or by detecting a rising of TSG3nOPCI0 and TSG3nOPCI1 signals. (When TSG3nS120DCO = 0)

For examples of operation in 120-DC mode when trigger input switch method is used, see **Figure 25.80** to **Figure 25.83**.

CAUTION

The initial pattern should be set according to the read input level of the port to which TSG3nPTSI2 to TSG3nPTSI0 pins are connected.

(4) Timer Output in 120-DC Mode

In 120-DC mode, the PWM output is controlled with TSG3nPAT0W, TSG3nPAT1W, and TSG3nCMP1E to TSG3nCMP12E. TSG3nPAT0W, TSG3nCMP1E, TSG3nCMP2E, TSG3nCMP5E, TSG3nCMP6E, TSG3nCMP9E, and TSG3nCMP10E are set to control the output of TSG3nO1, TSG3nO3, and TSG3nO5 pins. TSG3nPAT1W, TSG3nCMP3E, TSG3nCMP4E, TSG3nCMP7E, TSG3nCMP8E, TSG3nCMP11E, and TSG3nCMP12E are set with the output of SG2nO2, TSG3nO4, and TSG3nO6 pins.

With PWM output control, eight types of output patterns can be selected for each of TSG3nO1, TSG3nO3, and TSG3nO5 pins and TSG3nO2, TSG3nO4, and TSG3nO6 pins.

Table 25.84 TSG3nPAT0W Set Value and Output Control

PATmT Value	Output Control
000	Fixed to low
001	PWM output set with TSG3nCMP1E
010	PWM output set with TSG3nCMP2E
011	PWM output set with TSG3nCMP5E
100	PWM output set with TSG3nCMP6E
101	PWM output set with TSG3nCMP9E
110	PWM output set with TSG3nCMP10E
111	Fixed to high

Note: m = 0, 1, 2, 3, 4, 5

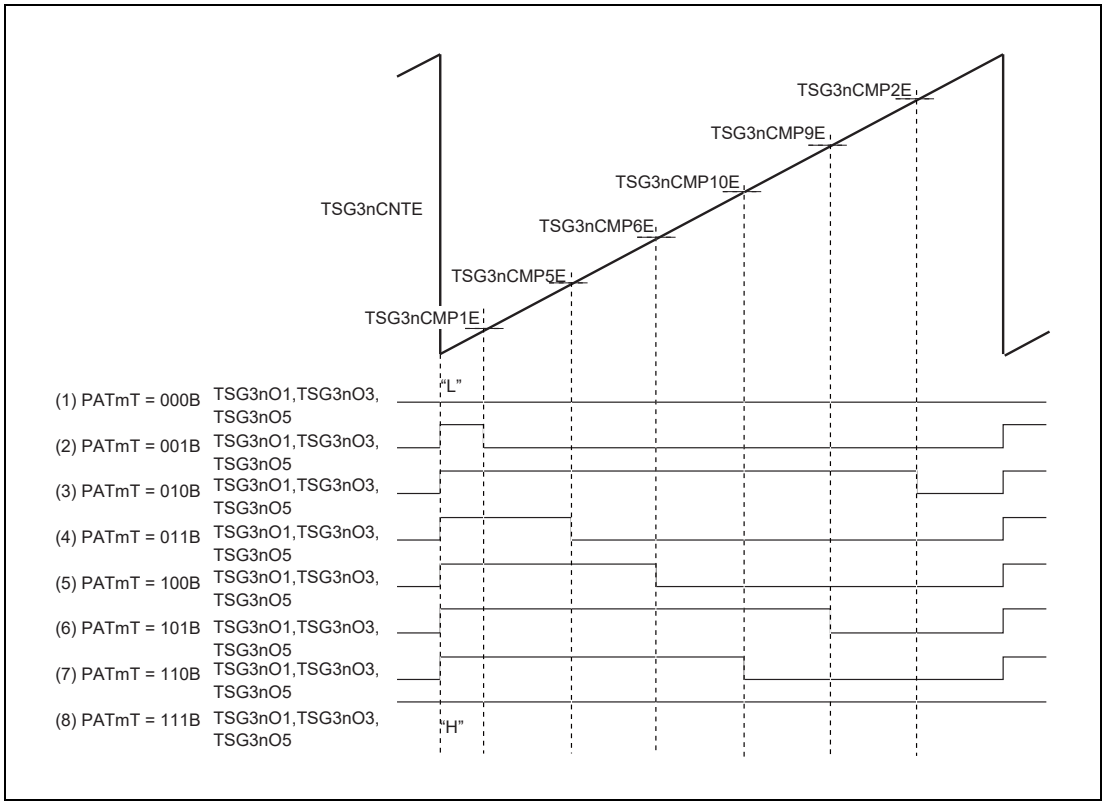

Figure 25.78 TSG3nO1, TSG3nO3, TSG3nO5 Pin Output of Each Output Pattern

Table 25.85 TSG3nPAT1W Set Value and Output Control

PATmB Value	Output Control
000	Fixed to low
001	PWM output set with TSG3nCMP3E
010	PWM output set with TSG3nCMP4E
011	PWM output set with TSG3nCMP7E
100	PWM output set with TSG3nCMP8E
101	PWM output set with TSG3nCMP11E
110	PWM output set with TSG3nCMP12E
111	Fixed to high

Note: m = 0, 1, 2, 3, 4, 5

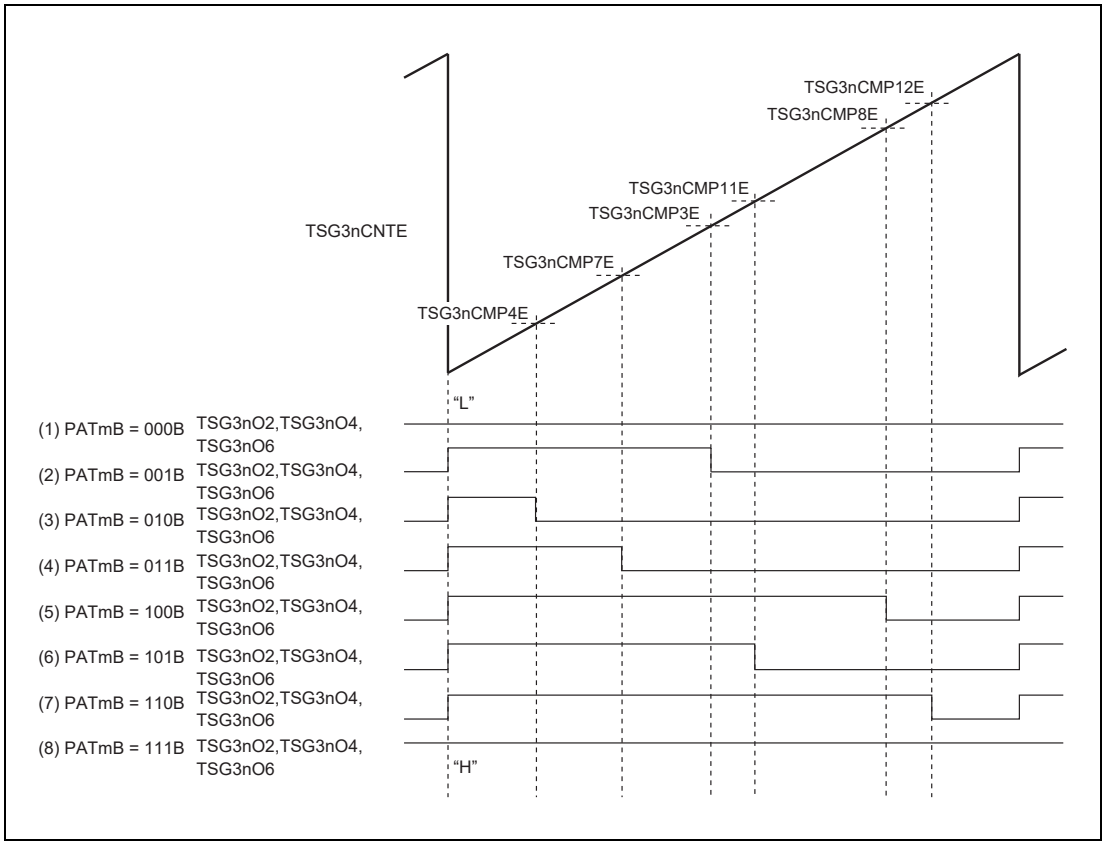

Figure 25.79 TSG3nO2, TSG3nO4, TSG3nO6 Pin Output of Each Output Pattern

(5) Operation in 120-DC Mode

Figure 25.80 to **Figure 25.83** show examples of operation in 120-DC mode.

The TSG3nO1 to TSG3nO6 pins detect the input level change of the TSG3nPTSI2 to TSG3nPTSI0 pins, and then change the output pattern. The 18-bit counter produces sawtooth waveform and TSG3nCMP0E to TSG3nCMP12E output PWM signal.

When TSG3nS120DCO = 0, the 18-bit counter is cleared to 00000_H each time the counter value matches with TSG3nCMP0E or a change in the TSG3nPTSI2 to TSG3nPTSI0 pins is detected. The timer output pattern is switched each time a change in the TSG3nPTSI2 to TSG3nPTSI0 pins is detected.

When TSG3nS120DCO = 1, the 18-bit counter is cleared to 00000_H when the counter value matches with TSG3nCMP0E but not cleared with a change in the TSG3nPTSI2 to TSG3nPTSI0 pins. The timer output pattern is switched to the one corresponding to the patterns of TSG3nPTSI2 to TSG3nPTSI0 pins at the next match timing of TSG3nCNTE and TSG3nCMP0E.

NOTE

PAT0T to PAT5T and PAT0B to PAT5B show PWM operation set by TSG3nCMP1E to TSG3nCMP12E, respectively.

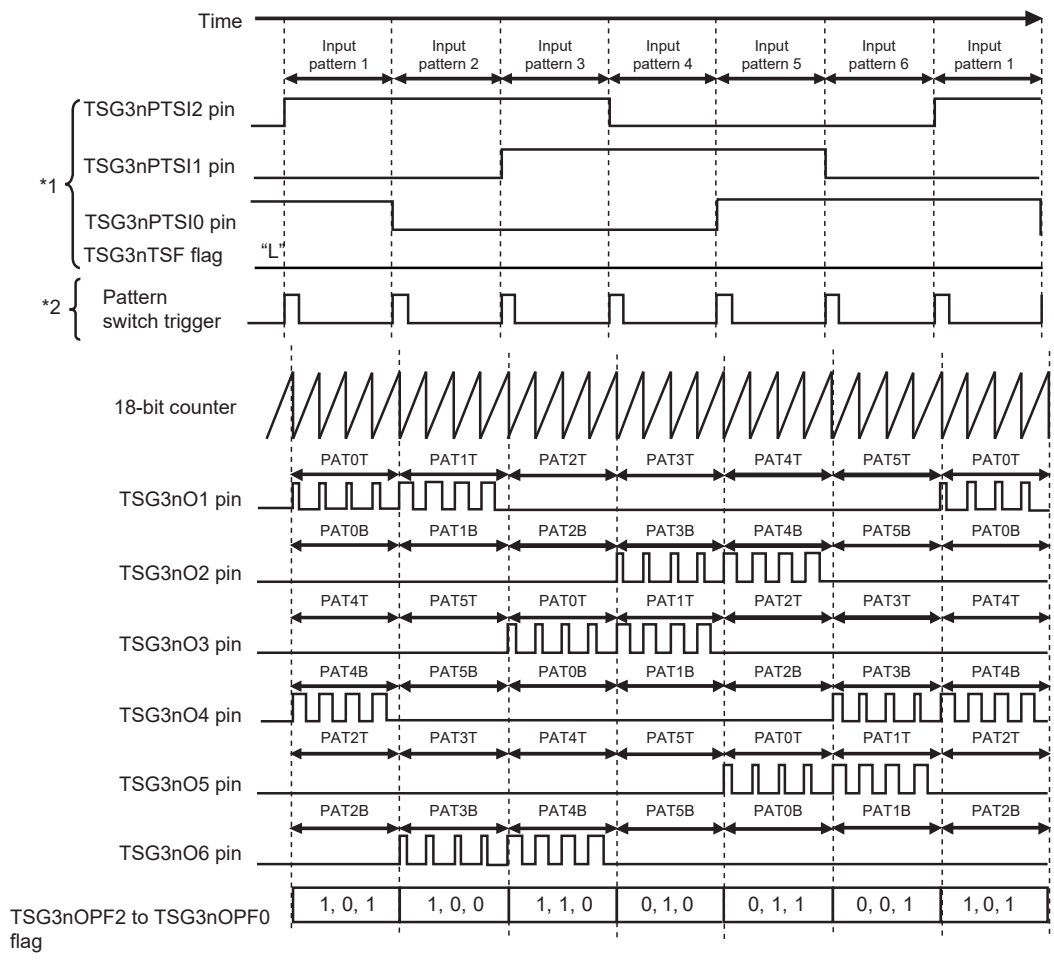

Note 1. For pattern switch method (TSG3nOPT0.TSG3nSTE = 1, TSG3nOPT0.TSG3nPOT = 0)

Note 2. For trigger switch method (TSG3nOPT0.TSG3nSTE = 1, TSG3nOPT0.TSG3nPOT = 1)

Figure 25.80 Example of Operation in 120-DC Mode (Normal Rotation: TSG3nSTR1.TSG3nTSF = 0 and TSG3nOPT0.TSG3nIDC = 0)

NOTE

TSG3nOPT0.TSG3nSOC = 0

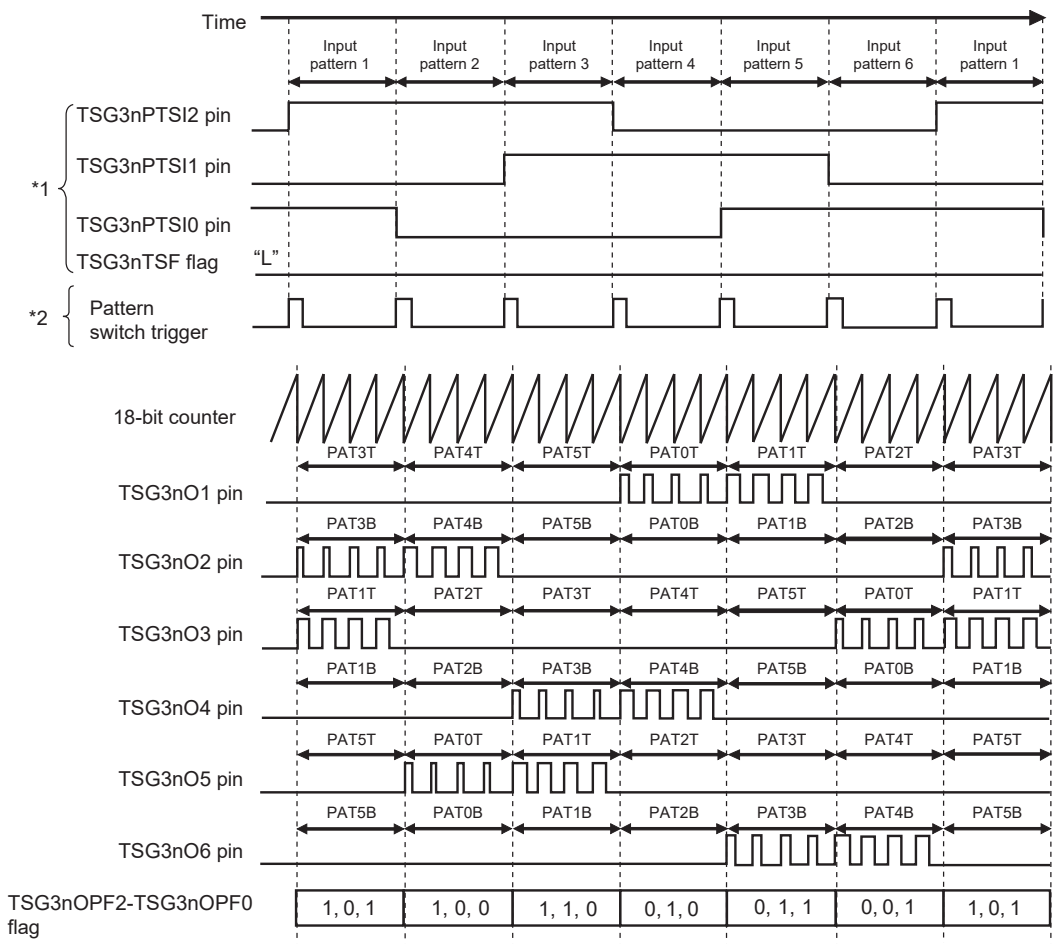

Note 1. For pattern switch method (TSG3nOPT0.TSG3nSTE = 1, TSG3nOPT0.TSG3nPOT = 0)

Note 2. For trigger switch method (TSG3nOPT0.TSG3nSTE = 1, TSG3nOPT0.TSG3nPOT = 1)

Figure 25.81 Example of Operation in 120-DC Mode (Normal Rotation: TSG3nSTR1.TSG3nTSF = 0 and TSG3nOPT0.TSG3nIDC = 1)

NOTE

TSG3nOPT0.TSG3nSOC = 0

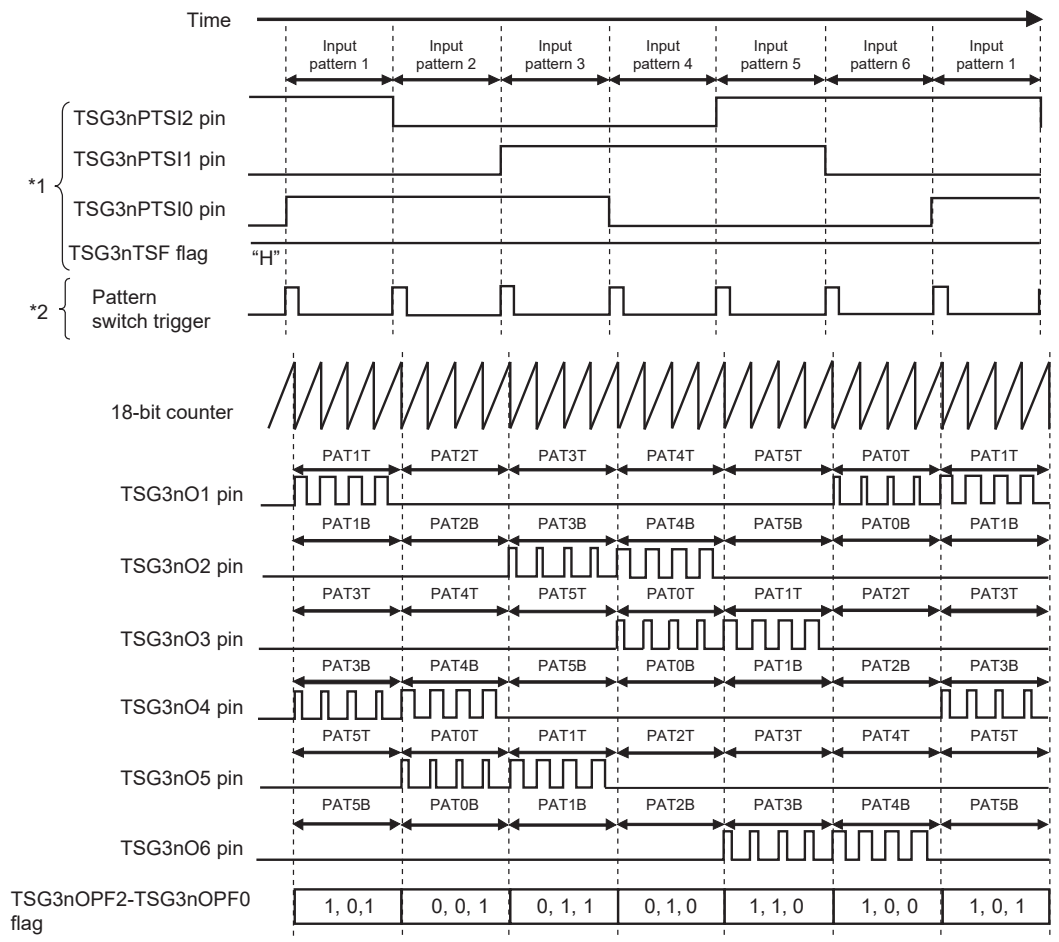

Note 1. For pattern switch method (TSG3nOPT0.TSG3nSTE = 1, TSG3nOPT0.TSG3nPOT = 0)

Note 2. For trigger switch method (TSG3nOPT0.TSG3nSTE = 1, TSG3nOPT0.TSG3nPOT = 1)

Figure 25.82 Example of Operation in 120-DC Mode (Reverse Rotation: TSG3nSTR1.TSG3nTSF = 1 and TSG3nOPT0.TSG3nIDC = 0)

NOTE

TSG3nOPT0.TSG3nSOC = 0

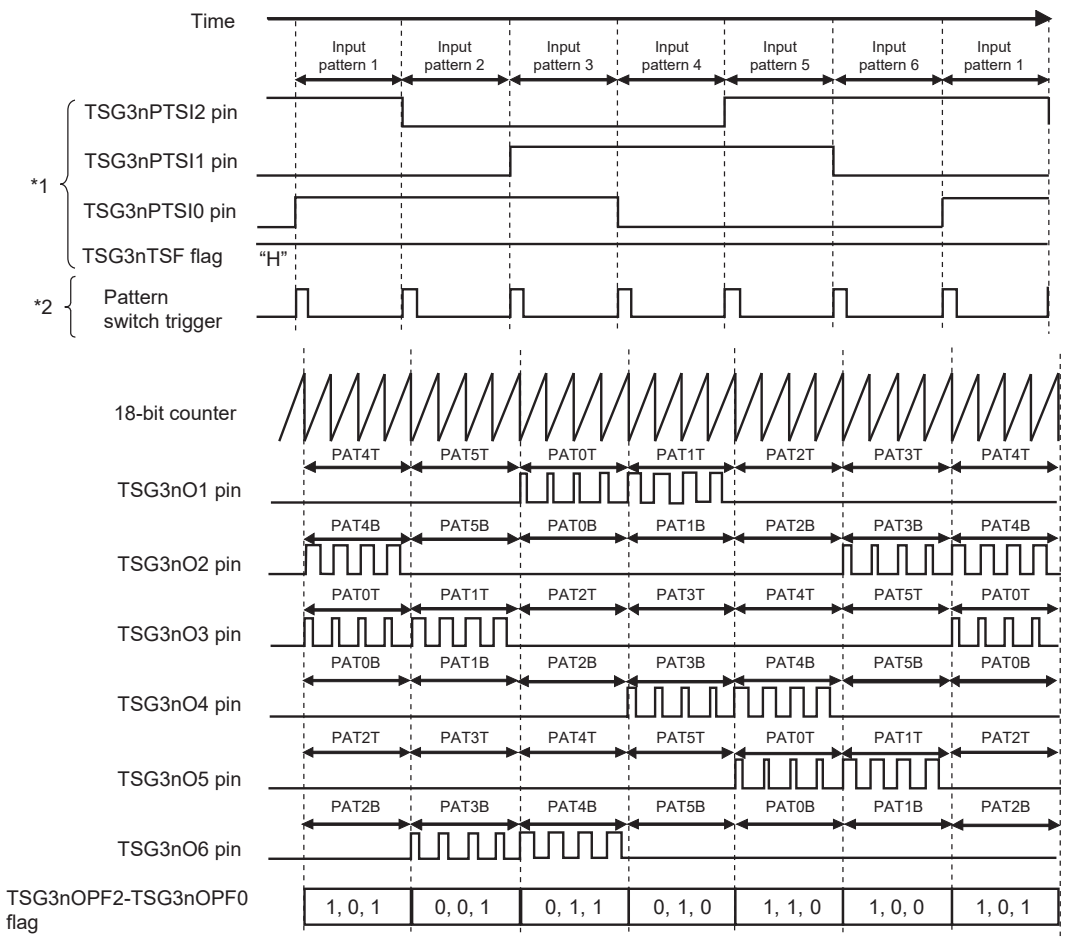

Note 1. For pattern switch method (TSG3nOPT0.TSG3nSTE = 1, TSG3nOPT0.TSG3nPOT = 0)

Note 2. For trigger switch method (TSG3nOPT0.TSG3nSTE = 1, TSG3nOPT0.TSG3nPOT = 1)

Figure 25.83 Example of Operation in 120-DC Mode (Reverse Rotation: TSG3nSTR1.TSG3nTSF = 1 and TSG3nOPT0.TSG3nIDC = 1)

NOTE

TSG3nOPT0.TSG3nSOC = 0

(6) List of Output Patterns in 120-DC Mode

In 120-DC mode, the output pattern is determined according to the electric current direction (TSG3nOPT0.TSG3nIDC) and the pattern order direction.

Table 25.86 Selection of Pattern Order Direction in 120-DC Mode

TSG3nOPT0			Pattern Order Direction
TSG3nSTE	TSG3nPOT	TSG3nPSS	
0	—	1	TSG3nPSC
1	0	—	TSG3nTSF (TSGnPSC only for initial setting at operation start)
1	1	1	TSG3nPSC

Table 25.87 List of Output Patterns in 120-DC Mode (1/4)

Electric current direction: normal (TSG3nIDC = 0)
Pattern order direction: normal (TSG3nTSF = 0 or TSG3nPSC = 0)

Output pins	TSG3nOPT1.TSG3nSPC2-TSG3nSPC0*1/TSG3nSTR1.TSG3nOPF2-TSG3nOPF0							
	101	100	110	010	011	001	000	111
TSG3nO1	PAT0T	PAT1T	PAT2T	PAT3T	PAT4T	PAT5T	Low	Low
TSG3nO2	PAT0B	PAT1B	PAT2B	PAT3B	PAT4B	PAT5B	Low	Low
TSG3nO3	PAT4T	PAT5T	PAT0T	PAT1T	PAT2T	PAT3T	Low	Low
TSG3nO4	PAT4B	PAT5B	PAT0B	PAT1B	PAT2B	PAT3B	Low	Low
TSG3nO5	PAT2T	PAT3T	PAT4T	PAT5T	PAT0T	PAT1T	Low	Low
TSG3nO6	PAT2B	PAT3B	PAT4B	PAT5B	PAT0B	PAT1B	Low	Low

Table 25.87 List of Output Patterns in 120-DC Mode (2/4)

Electric current direction: reverse (TSG3nIDC = 1)
Pattern order direction: normal (TSG3nTSF = 0 or TSG3nPSC = 0)

Output pins	TSG3nOPT1.TSG3nSPC2-TSG3nSPC0*1/TSG3nSTR1.TSG3nOPF2-TSG3nOPF0							
	101	100	110	010	011	001	000	111
TSG3nO1	PAT3T	PAT4T	PAT5T	PAT0T	PAT1T	PAT2T	Low	Low
TSG3nO2	PAT3B	PAT4B	PAT5B	PAT0B	PAT1B	PAT2B	Low	Low
TSG3nO3	PAT1T	PAT2T	PAT3T	PAT4T	PAT5T	PAT0T	Low	Low
TSG3nO4	PAT1B	PAT2B	PAT3B	PAT4B	PAT5B	PAT0B	Low	Low
TSG3nO5	PAT5T	PAT0T	PAT1T	PAT2T	PAT3T	PAT4T	Low	Low
TSG3nO6	PAT5B	PAT0B	PAT1B	PAT2B	PAT3B	PAT4B	Low	Low

Note 1. When TSG3nSPC2 to TSG3nSPC0 are written to while the values of TSG3nSTE and TSG3nPOT are 1, the output pattern changes. Thereafter, when a pattern switch trigger is generated on rising of the TSG3nOPCI0 and TSG3nOPCI1 signals, the output is switched according to the order of pattern switching. When TSG3nS120DCO = 0, the output is switched immediately. When TSG3nS120DCO = 1, the output is switched when the main counter (TSG3nCNTE) is matched with TSG3nCMP0E (from the next timer cycle). TSG3nSPC2 to TSG3nSPC0 remain unchanged even if the output pattern is switched.

NOTES

1. PAT0T to PAT5T: PWM output set by TSG3nCMP1E, TSG3nCMP2E, TSG3nCMP5E, TSG3nCMP6E, TSG3nCMP9E, TSG3nCMP10E
2. PAT0B to PAT5B: PWM output set by TSG3nCMP3E, TSG3nCMP4E, TSG3nCMP7E, TSG3nCMP8E, TSG3nCMP11E, TSG3nCMP12E

Table 25.87 List of Output Patterns in 120-DC Mode (3/4)

Electric current direction: normal (TSG3nIDC = 0)
Pattern order direction: reverse (TSG3nTSF = 1 or TSG3nPSC = 1)

Output pins	TSG3nOPT1.TSG3nSPC2-TSG3nSPC0*1/TSG3nSTR1.TSG3nOPF2-TSG3nOPF0							
	101	100	110	010	011	001	000	111
TSG3nO1	PAT1T	PAT0T	PAT5T	PAT4T	PAT3T	PAT2T	Low	Low
TSG3nO2	PAT1B	PAT0B	PAT5B	PAT4B	PAT3B	PAT2B	Low	Low
TSG3nO3	PAT3T	PAT2T	PAT1T	PAT0T	PAT5T	PAT4T	Low	Low
TSG3nO4	PAT3B	PAT2B	PAT1B	PAT0B	PAT5B	PAT4B	Low	Low
TSG3nO5	PAT5T	PAT4T	PAT3T	PAT2T	PAT1T	PAT0T	Low	Low
TSG3nO6	PAT5B	PAT4B	PAT3B	PAT2B	PAT1B	PAT0B	Low	Low

Table 25.87 List of Output Patterns in 120-DC Mode (4/4)

Electric current direction: reverse (TSG3nIDC = 1)
Pattern order direction: reverse (TSG3nTSF = 1 or TSG3nPSC = 1)

Output pins	TSG3nOPT1.TSG3nSPC2-TSG3nSPC0*1/TSG3nSTR1.TSG3nOPF2-TSG3nOPF0							
	101	100	110	010	011	001	000	111
TSG3nO1	PAT4T	PAT3T	PAT2T	PAT1T	PAT0T	PAT5T	Low	Low
TSG3nO2	PAT4B	PAT3B	PAT2B	PAT1B	PAT0B	PAT5B	Low	Low
TSG3nO3	PAT0T	PAT5T	PAT4T	PAT3T	PAT2T	PAT1T	Low	Low
TSG3nO4	PAT0B	PAT5B	PAT4B	PAT3B	PAT2B	PAT1B	Low	Low
TSG3nO5	PAT2T	PAT1T	PAT0T	PAT5T	PAT4T	PAT3T	Low	Low
TSG3nO6	PAT2B	PAT1B	PAT0B	PAT5B	PAT4B	PAT3B	Low	Low

Note 1. When TSG3nSPC2 to TSG3nSPC0 are written to while the values of TSG3nSTE and TSG3nPOT are 1, the output pattern changes. Thereafter, when a pattern switch trigger is generated on rising of the TSG3nOPCI0 and TSG3nOPCI1 signals, the output is switched according to the order of pattern switching.
When TSG3nS120DCO = 0, the output is switched immediately.
When TSG3nS120DCO = 1, the output is switched when the main counter (TSG3nCNTE) is matched with TSG3nCMP0E (from the next timer cycle). TSG3nSPC2 to TSG3nSPC0 remain unchanged even if the output pattern is switched.

NOTES

1. PAT0T to PAT5T: PWM output set by TSG3nCMP1E, TSG3nCMP2E, TSG3nCMP5E, TSG3nCMP6E, TSG3nCMP9E, TSG3nCMP10E
2. PAT0B to PAT5B: PWM output set by TSG3nCMP3E, TSG3nCMP4E, TSG3nCMP7E, TSG3nCMP8E, TSG3nCMP11E, TSG3nCMP12E

(7) Operation Start Timing in 120-DC Mode

In 120-DC mode, when trigger switch control (TSG3nOPT0.TSG3nPOT = 1) is used, pattern set with TSG3nOPT1.TSG3nSPC2 to TSG3nOPT1.TSG3nSPC0, TSG3nOPT0.TSG3nPSC, and TSG3nOPT0.TSG3nIDC can be output. However, when pattern switch control (TSG3nOPT0.TSG3nSTE=1, TSG3nOPT0.TSG3nPOT = 0) is used, the pattern of the TSG3nPTSI2 to TSG3nPTSI0 pins can be detected but the pattern order direction (TSG3nSTR1.TSG3nTSF) cannot be determined. Therefore, set the pattern order direction in TSG3nPSC when TSG3nTE is 0. The TSG3nPSC set value is loaded to TSG3nTSF, and the value can be used for the initial pattern setting.

- TSG3nOPT0.TSG3nSOC = 0, TSG3nPSC = 0, TSG3nPOT = 0, TSG3nIDC = 0

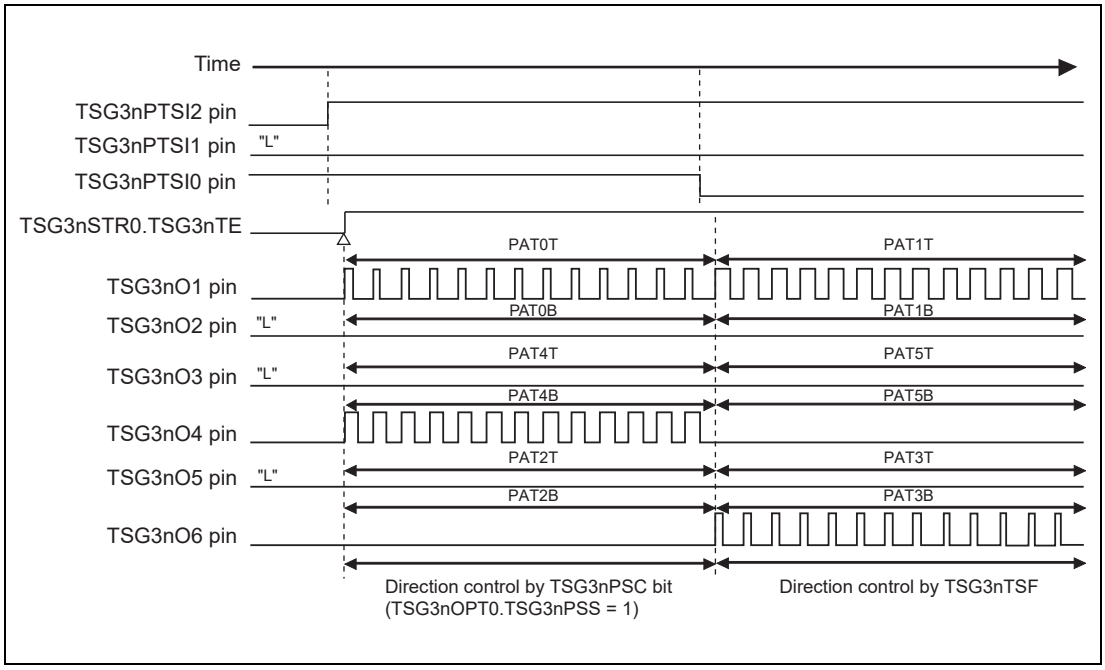

Figure 25.84 Control when Timer Output Starts in Normal Rotation (when Normal Pattern is Input)

- TSG3nOPT0.TSG3nSOC = 0, TSG3nPSC = 1, TSG3nPOT = 0, TSG3nIDC = 1, TSG3nSTE = 1

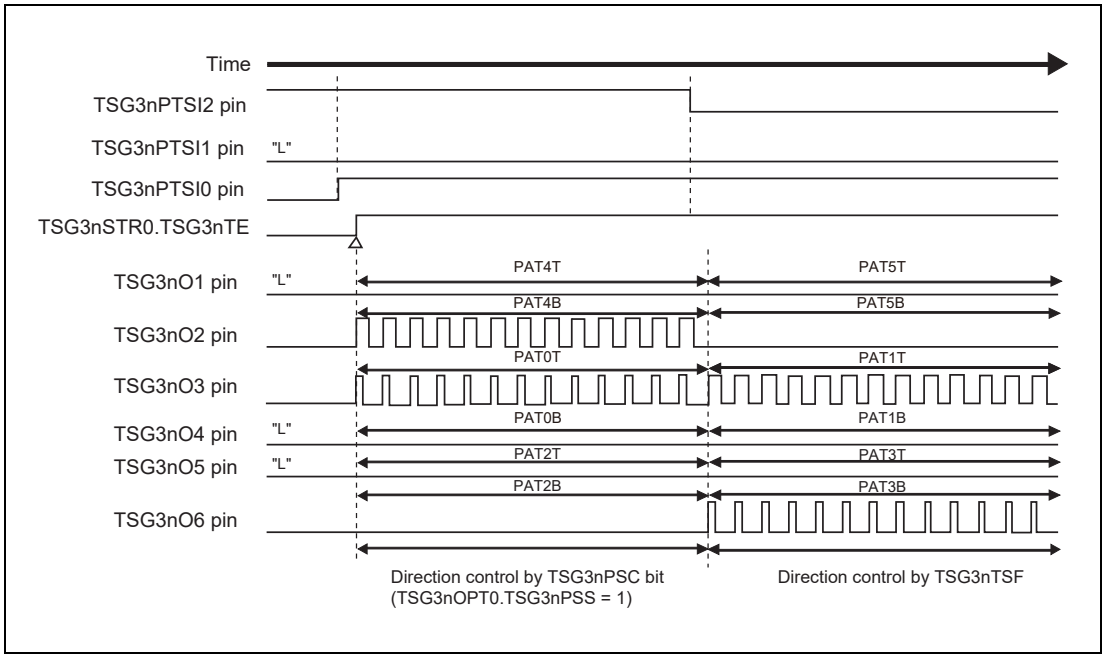

Figure 25.85 Control when Timer Output Starts in Reverse Rotation (when Normal Pattern is Input)

- TSG3nOPT0.TSG3nSOC = 0, TSG3nPSC = 0, TSG3nPOT = 0, TSG3nIDC = 0, TSG3nSTE = 1

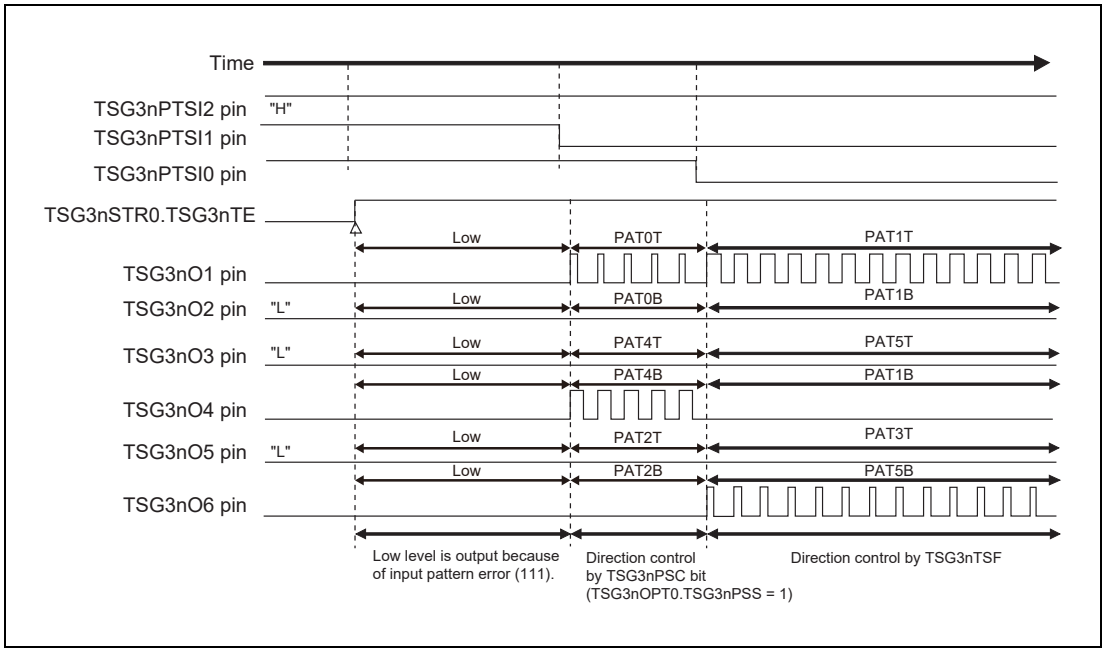

Figure 25.86 Control when Timer Output Starts in Normal Rotation (when Error Pattern is Input)

- TSG3nOPT0.TSG3nSOC = 0, TSG3nPSC = 1, TSG3nPOT = 0, TSG3nIDC = 1, TSG3nSTE = 1

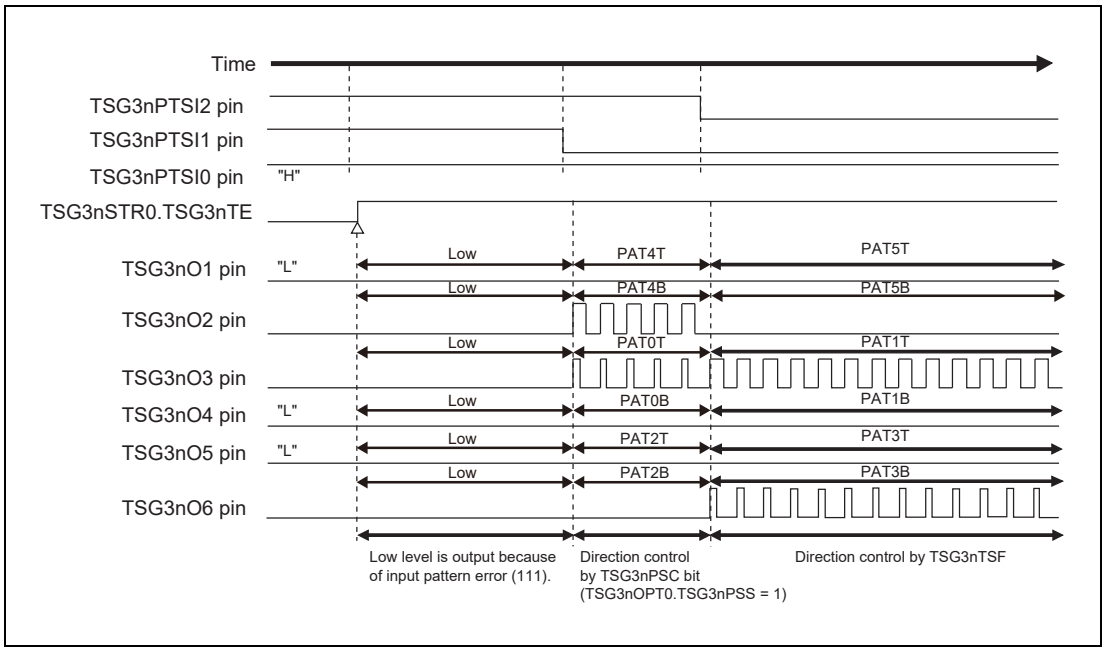

Figure 25.87 Control when Timer Output Starts in Reverse Rotation (when Error Pattern is Input)

(8) Output Switch Timing in 120-DC Mode (TSG3nS120DCO = 0)

As shown in **Figure 25.88** to **Figure 25.91**, in 120-DC mode, the external switch timing for output pattern (TSG3nOPCI0 and TSG3nOPCI1 signals, and TSG3nPTSI2 to TSG3nPTSI0 pins) is input irrespective of the 18-bit counter operation. When TSG3nS120DCO is 0, the output is switched to the new pattern by clearing the 18-bit counter using the pattern switch timing signal applied from outside.

In the pattern switch method, if a change in TSG3nPTSI2 to TSG3nPTSI0 pins occurs several times within one period, the output pattern is switched by clearing the 18-bit counter at each change. In the trigger switch method, if TSG3nOPCI0 and TSG3nOPCI1 signal trigger is input for several times within one period, the output pattern is switched by clearing the 18-bit counter each time the trigger is accepted.

If TSG3nSPC2 to TSG3nSPC0 are rewritten several times within one period, the output pattern is switched by clearing the 18-bit counter each time TSG3nSPC2 to TSG3nSPC0 are rewritten.

In case of a conflict between a rewrite to TSG3nOPT1.TSG3nSPC2 to TSG3nSPC0 and TSG3nOPCI0 and TSG3nOPCI1 trigger, rewriting of TSG3nSPC2 to TSG3nSPC0 takes precedence.

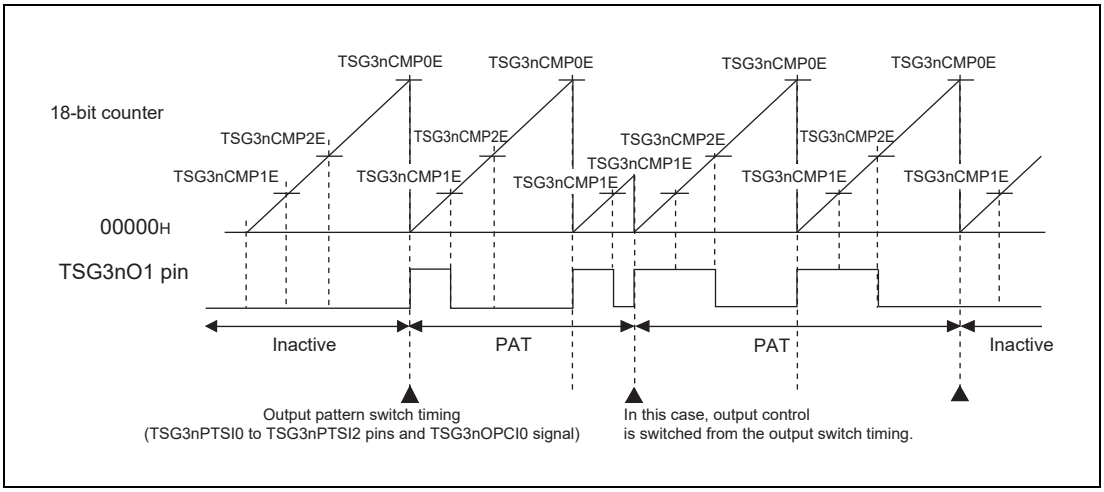

Figure 25.88 Output Switch Example (TSG3nPTSI2 to TSG3nPTSI0 Pins and TSG3nOPCI0 and TSG3nOPCI1 Signal Trigger Input)

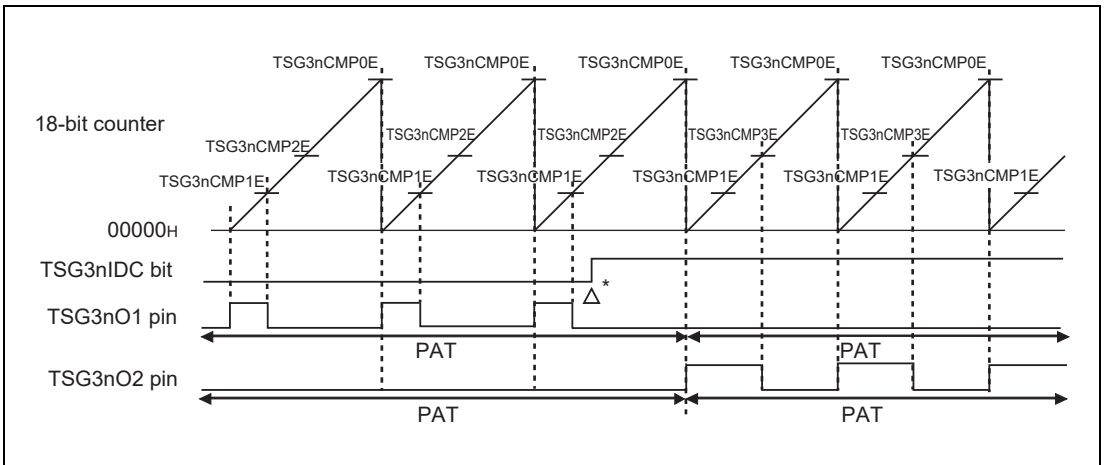

Note 1. When the pattern is switched here, output control is switched in the next period.

Figure 25.89 Output Switch Example (Switched by TSG3nOPT0.TSG3nIDC)

NOTE

If a change in the TSG3nPTSI2-0 pins occurs by the time next period when output control is switched by the TSG3nIDC bit, the 18-bit counter is cleared and output control is switched.

TSG3nOPT0.TSG3nPOT = 1

- TSG3nOPT0.TSG3nSTE =1, TSG3nOPT0.TSG3nPOT = 1

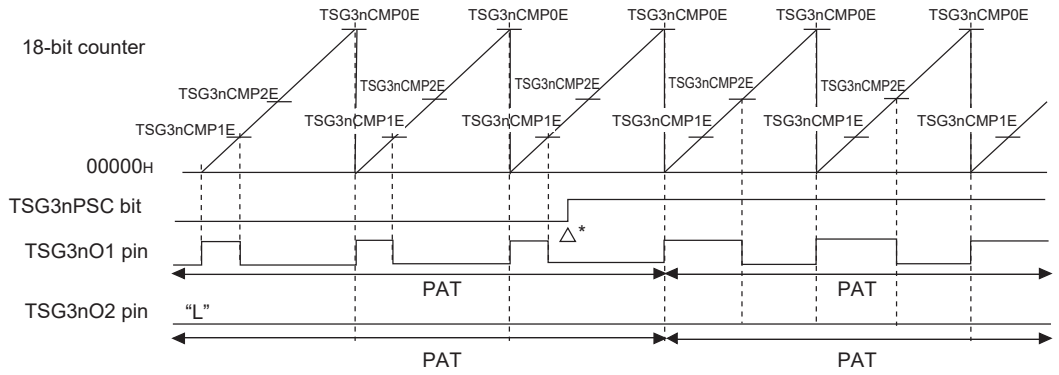

Note 1. When the pattern is switched here, output control is switched from the next period.

Figure 25.90 Output Switch Example (Switched by TSG3nOPT0.TSG3nPSC)

- TSG3nOPT0.TSG3nSOC = 0, TSG3nOPT0.TSG3nSTE =1, TSG3nOPT0.TSG3nPOT = 1

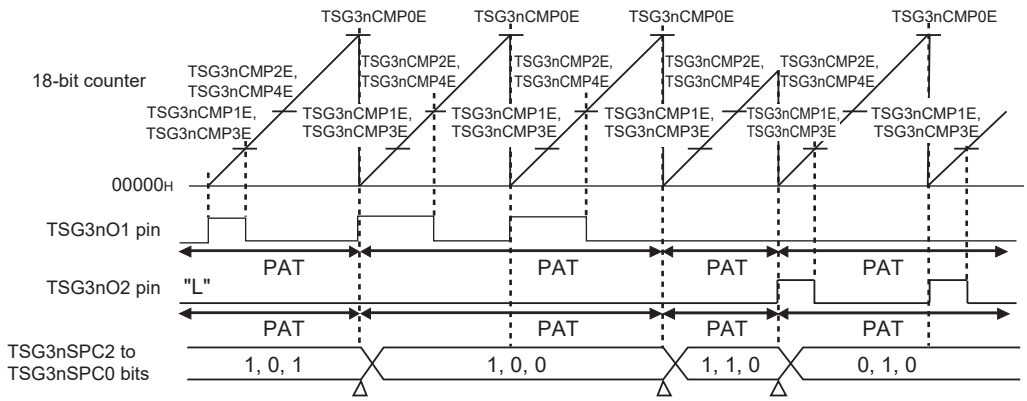

Note: Δ: Write access

Figure 25.91 Output Switch Example (Switched by TSG3nOPT1.TSG3nSPC2 to TSG3nSPC0)

(9) Compare Register Rewrite Timing in 120-DC Mode

Example of operation when TSG3nCMP1E is reloaded (rewritten simultaneously) is shown below.

Figure 25.92 shows an output example when TSG3nCMP1E is rewritten. After TSG3nCMP1E is changed, data is not transferred to the TSG3nCMP1E buffer register (changed data is not valid) until the next reload timing; therefore, the specified output waveform can be obtained. However, do not write to TSG3nCMP1E again while the reload is suspended (period from when TSG3nCMP1E is changed to when simultaneous rewrite is executed). Be sure to read the reload request flag (TSG3nRSF) to confirm that the flag is 0, and write data to TSG3nCMP1E.

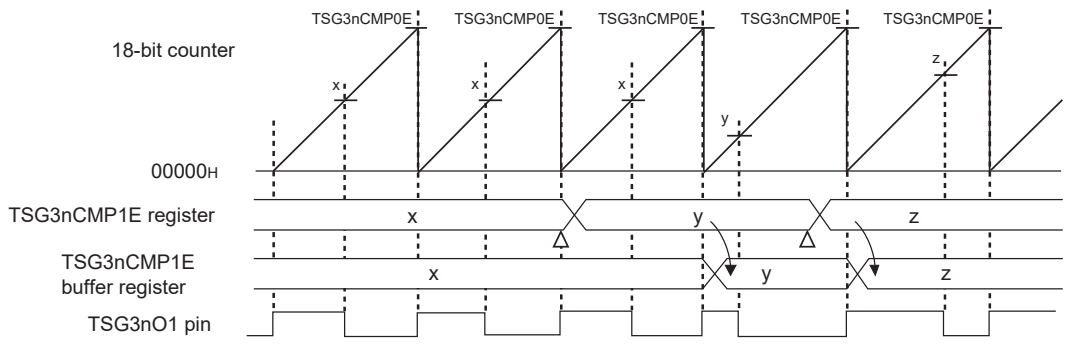

Note: Δ: Write access

Figure 25.92 Output Example when TSG3nCMP1E is Rewritten

(10) Dead Time Control in 120-DC Mode

In 120-DC mode, the dead time is controlled on falling of each phase, and the dead time is added.

The dead time set in TSG3nDTC1W is inserted on falling of the positive phase, and the dead time set in TSG3nDTC0W is inserted on falling of the inverse phase.

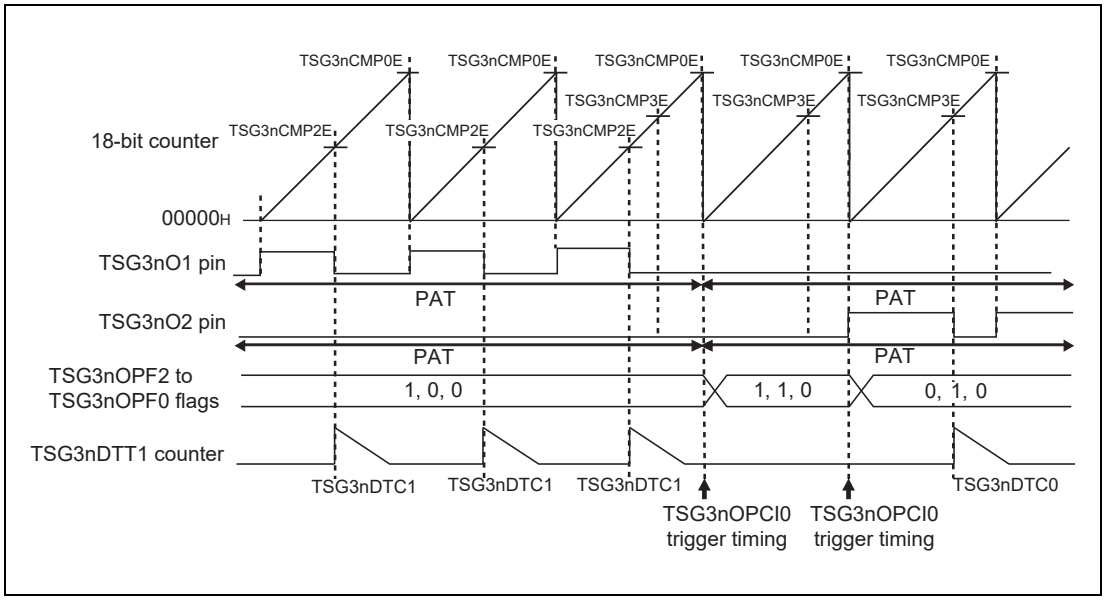

Figure 25.93 Output Switch Example

CAUTION

The dead time control method may affect the timer output. The timer output may not have the specified active level width due to the dead time control under the following conditions:

- **When noise is generated on the input pattern in the pattern switch method**
- **When a change in the input pattern occurs earlier than the PWM period in the pattern switch method**
- **When TSG3nOPT1.TSG3nSPC2 to TSG3nSPC0 are changed and the output pattern is forcibly changed in the trigger switch method**
- **When switch method is changed**
- **When the current direction control bit (TSG3nOPT0.TSG3nIDC) is changed**
- **When the software output control function is used**

(11) Output Switch in 120-DC Mode

In 120-DC mode, the output pattern can be controlled by writing values to TSG3nOPT1.TSG3nSPC2 to TSG3nSPC0 when the trigger switch method (TSG3nOPT0.TSG3nSTE = 1, and TSG3nPOT = 1) is used. The dead time is secured by hardware at the switch timing.

CAUTION

When 111_B or 000_B is written to TSG3nSPC2 to TSG3nSPC0, the TSG3nO1 to TSG3nO6 pins are driven low.

(12) Operation when Noise is Generated in TSG3nPTSI2 to TSG3nPTSI0 Pins in 120-DC Mode

Input to the TSG3nPTSI2 to TSG3nPTSI0 pins is assumed to be the hall sensor signals of the brushless DC motor. Depending on the system, a noise may be generated on the TSG3nPTSI2 to TSG3nPTSI0 pins. Operation when a noise is generated is described below.

For system product design, be sure to insert a noise filter circuit between the hall sensor and the TSG3nPTSI2 to TSG3nPTSI0 pins.

Figure 25.95 shows a case when a noise is generated on the TSG3nPTSI2 to TSG3nPTSI0 pins during operation with the pattern switch method used.

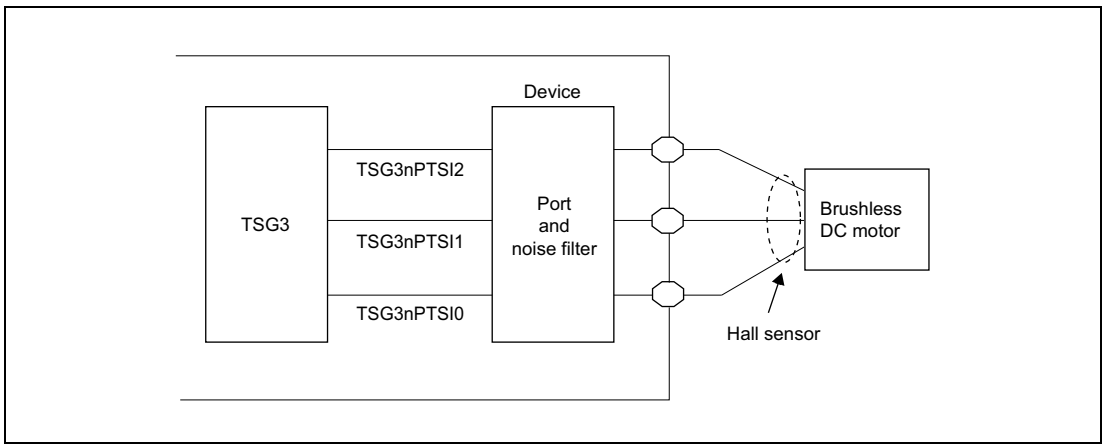

Figure 25.94 Example of Noise Filter Circuit Connection

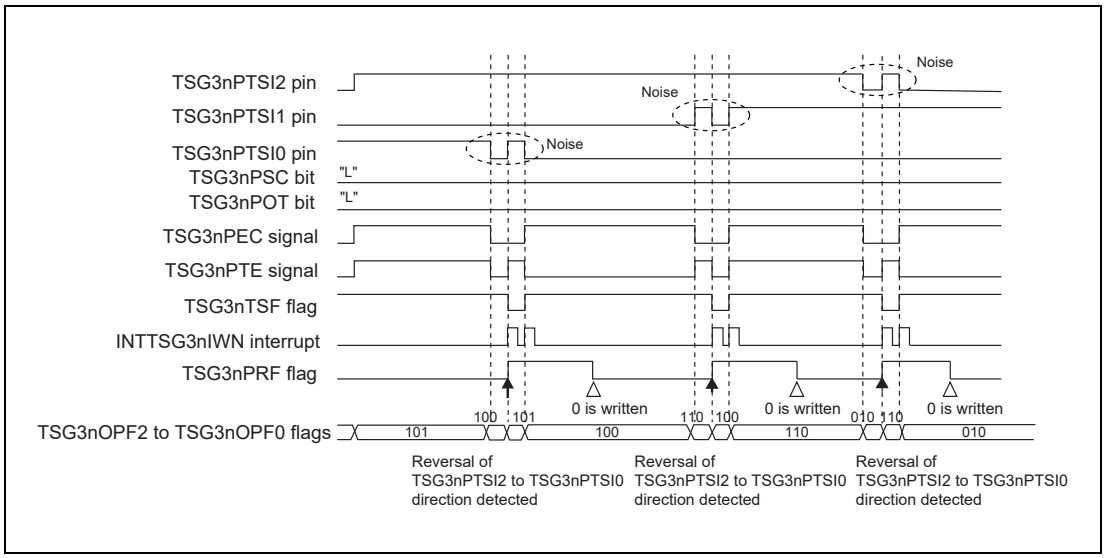

Figure 25.95 Example of Noise Generation at Level Change in TSG3nPTSI2 to TSG3nPTSI0 Pins (Pattern Switch Method)

(a) Change Timing of Input Pattern Change Detection Signal (TSG3nPTE)

The TSG3nPTE signal toggles when the input pattern (TSG3nPTSI2 to TSG3nPTSI0 pins) changes.

CAUTION

Be sure to specify the pattern order direction by the TSG3nPSC bit (when the TSG3nPSS bit in the TSG3nOPT0 register is 1) in the TSG3nOPT0 register.

When TSG3nPSC = 0:

Table 25.88 TSG3nPTE Toggle Operation when TSG3nPSC is 0

		TSG3nPTSI2-TSG3nPTSI0 Pins after change							
		000	111	101	100	110	010	011	001
Current TSG3nPTSI2 to TSG3nPTSI0 pins	000	—	—	—	—	—	—	—	—
	111	—	—	—	—	—	—	—	—
	101	—	—	—	Toggle	—	—	—	—
	100	—	—	—	—	Toggle	—	—	—
	110	—	—	—	—	—	Toggle	—	—
	010	—	—	—	—	—	—	Toggle	—
	011	—	—	—	—	—	—	—	Toggle
	001	—	—	Toggle	—	—	—	—	—

When TSG3nPSC = 1:

Table 25.89 TSG3nPTE Toggle Operation when TSG3nPSC is 1

		TSG3nPTSI2-TSG3nPTSI0Pins after change							
		000	111	101	100	110	010	011	001
Current TSG3nPTSI2 to TSG3nPTSI0 pins	000	—	—	—	—	—	—	—	—
	111	—	—	—	—	—	—	—	—
	101	—	—	—	—	—	—	—	Toggle
	100	—	—	Toggle	—	—	—	—	—
	110	—	—	—	Toggle	—	—	—	—
	010	—	—	—	—	Toggle	—	—	—
	011	—	—	—	—	—	Toggle	—	—
	001	—	—	—	—	—	—	Toggle	—

(b) Change Timing of Three-Phase Encode Signal (TSG3nPEC)

he TSG3nPEC signal toggles when input pattern (TSG3nPTSI2 to TSG3nPTSI0 pins) changes

Table 25.90 TSG3nPEC Toggle Operation

		TSG3nPTSI2-TSG3nPTSI0after change							
		000	111	101	100	110	010	011	001
Current TSG3nPTSI2 to TSG3nPTSI0 Pins	000	—	—	—	—	—	—	—	—
	111	—	—	—	—	—	—	—	—
	101	—	—	—	Toggle	—	—	—	Toggle
	100	—	—	Toggle	—	Toggle	—	—	—
	110	—	—	—	Toggle	—	Toggle	—	—
	010	—	—	—	—	Toggle	—	Toggle	—
	011	—	—	—	—	—	Toggle	—	Toggle
	001	—	—	Toggle	—	—	—	Toggle	—

(c) Change Timing of TSG3nO1 to TSG3nO6 Pins

- When the pattern switch method is used, the output pattern changes when the input signal of the TSG3nPTSI2 to TSG3nPTSI0 pins*1 changes. The output is also switched when two or more pins change simultaneously.
- When the trigger switch method is used, the output pattern changes at the rising edge of the TSG3nOPCI0 and TSG3nOPCI1 signals. The output also changes when data is written to TSG3nSPC2 to TSG3nSPC0*1 in TSG3nOPT0.

Note 1. When the input pattern changes to 000 or 111, the TSG3nO1-TSG3nO6 pins are driven low. The output pattern of TSG3nO1-TSG3nO6 changes immediately only when TSG3nS120DCO = 0. When TSG3nS120DCO = 1, the output pattern is switched when the main counter (TSG3nCNTE) is matched with TSG3nCMP0E (from the next timer cycle).

(d) Change Timing of TSG3nTSF Flag

The TSG3nTSF flag toggles when the input pattern (TSG3nPTSI2 to TSG3nPTSI0 pins) changes

Table 25.91 Setting and Clearing of TSG3nTSF

		TSG3nPTSI2-TSG3nPTSI0 Pins after change							
		000	111	101	100	110	010	011	001
Current TSG3nPTSI2 to TSG3nPTSI0 Pins	000	—	—	—	—	—	—	—	—
	111	—	—	—	—	—	—	—	—
	101	—	—	—	0	—	—	—	1
	100	—	—	1	—	0	—	—	—
	110	—	—	—	1	—	0	—	—
	010	—	—	—	—	1	—	0	—
	011	—	—	—	—	—	1	—	0
	001	—	—	0	—	—	—	1	—

(e) Set Timing of TSG3nNDF Flag

This flag is set when two or more pins of the TSG3nPTSI2 to TSG3nPTSI0 pins change simultaneously, and cleared when 1 is written to the TSG3nNDR bit. The TSG3nNDF flag is valid when 1 is set to the TSG3nNDC bit.

(f) Set Timing of TSG3nPRF Flag

This flag is set when the TSG3nTSF flag changes, and cleared when 1 is written to the TSG3nPRR bit. The TSG3nPRF flag is valid when 1 is set to the TSG3nPRC bit.

(g) Set Timing of TSG3nPEF Flag

This flag is set when 000 or 111 is input to the TSG3nPTSI2 to TSG3nPTSI0 pins, and cleared when 1 is written to the TSG3nPER bit. The TSG3nPEF flag is valid when the TSG3nPEC bit is set to 1.

(13) Basic Control Flow in 120-DC Mode

In 120-DC mode, there are eight control states as listed in **Table 25.92**.

When TSG3nOPT0.TSG3nSTE = 1 and TSG3nPOT = 0, the pattern switch method is used for 120-DC control.

This is defined as fixed phase control. The fixed phase control should be performed considering the factors such as delay from the hall sensor and delay from sensor level detection to timer output. However, acceleration or deceleration can be performed simply by changing the PWM duty.

When TSG3nOPT0.TSG3nSTE = 1 and TSG3nPOT = 1, the trigger switch method is selected for 120-DC control.

This is defined as variable phase control. With the variable phase control, the timer output pattern is set prior to the hall sensor; therefore, acceleration or deceleration control according to the phase difference can be performed. However, control is more complex than the fixed phase control because offset width with respect to the hall sensor and the predicted value with respect to the hall sensor should be considered. For details, **Section 29.2.3.9, Three-Phase Pulse Input Control Function**.

When TSG3nOPT0.TSG3nSTE = 1, TSG3nOPT0.TSG3nPOT = 1, and TSG3nPSS = 1, the pattern order direction of the motor can be set with the TSG3nPSC bit in the TSG3nOPT0 register. Set TSG3nPSC to 0 for normal rotation and set TSG3nPSC to 1 for reverse rotation.

The TSG3nIDC bit in the TSG3nOPT0 register sets the electric current direction. If the same value as the rotation direction of the motor (TSG3nPSC set value) is set, acceleration control is set. If the different value from the rotation direction of the motor is set, deceleration control is set.

Table 25.92 Timer Control Status

Status	TSG3nPSC in TSG3nOPT0	TSG3nTSF in TSG3nSTR1	TSG3nIDC in TSG3nOPT0	TSG3nPOT in TSG3nOPT0	Control
A	—	0	0	0	Normal rotation, acceleration, and fixed phase
B	0	—	0	1	Normal rotation, acceleration, and variable phase
C	0	—	1	1	Normal rotation, deceleration, and variable phase
D	—	0	1	0	Normal rotation, deceleration, and fixed phase
E	—	1	1	0	Reverse rotation, acceleration, and fixed phase
F	1	—	1	1	Reverse rotation, acceleration, and variable phase
G	1	—	0	1	Reverse rotation, deceleration, and variable phase
H	—	1	0	0	Reverse rotation, deceleration, and fixed phase

Generally, the state, when the motor rotation stops, is assumed to be a state of the start and the control begins. First the fixed phase control is used to rotate the motor from the stopped state. Afterwards, to accelerate the motor speed to the fast rotation, the variable phase control is switched on. In combination with encoder timer (ENCA) and the variable phase control, the timer output is changed according to timing that is earlier than the change point of the hall sensors (leading).

To decelerate the motor speed from fast rotation, the direction of control is switched to deceleration control by rewriting only TSG3nIDC in TSG3nOPT0. When the rotation count can be reduced to low-speed rotation, the rotation can be placed in the stopped state by decreasing the PWM duty.

State transition is shown in **Figure 25.96** and **Figure 25.97**.

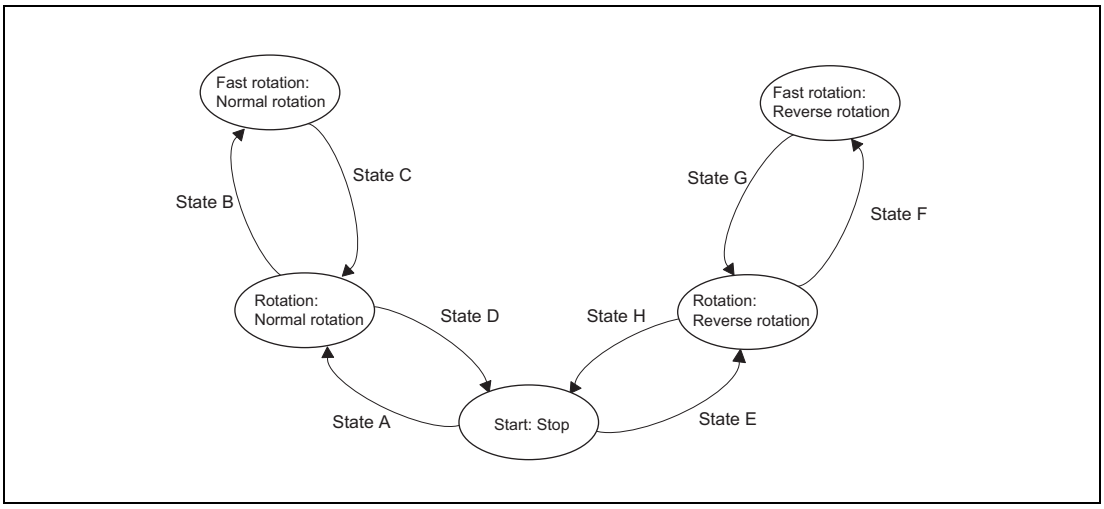

Figure 25.96 State Transition Diagram

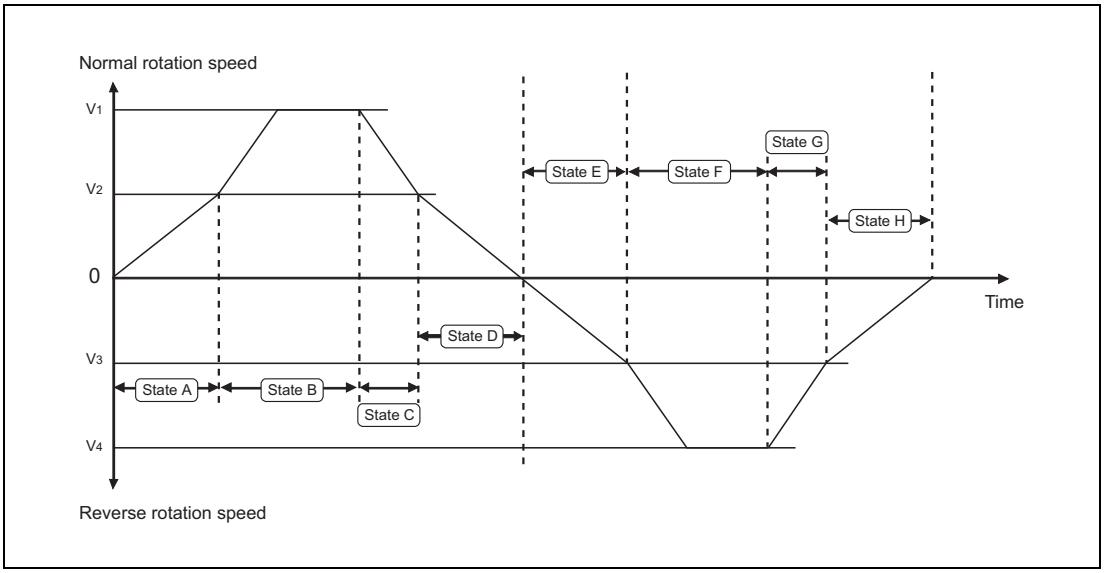

Figure 25.97 Relationship between State Transition and Rotation Speed of Motor

NOTE

V1 and V4: Fast rotation speed of normal rotation and reverse rotation

V2 and V3: Low rotation speed of normal rotation and reverse rotation

(14) Software Output Control Function in 120-DC Mode

TSG3nOPT0.TSG3nSOC and TSG3nIDC, and TSG3nOPT1.TSG3nSPC2 to TSG3nSPC0 are used in 120-DC mode for timer output control by software.

As shown in **Figure 25.98**, the output control is switched immediately when TSG3nSOC is set to 1. If the dead time is set, the period of the dead time period is guaranteed. After that, to switch the output control from software output control to 120-DC control, set TSG3nSOC to 0. At this timing, output control is retained. When the reload timing is generated, output control is switched to 120-DC mode.

For details on software output control function, see **Section 25.4.7.8, Software Output Control Function**.

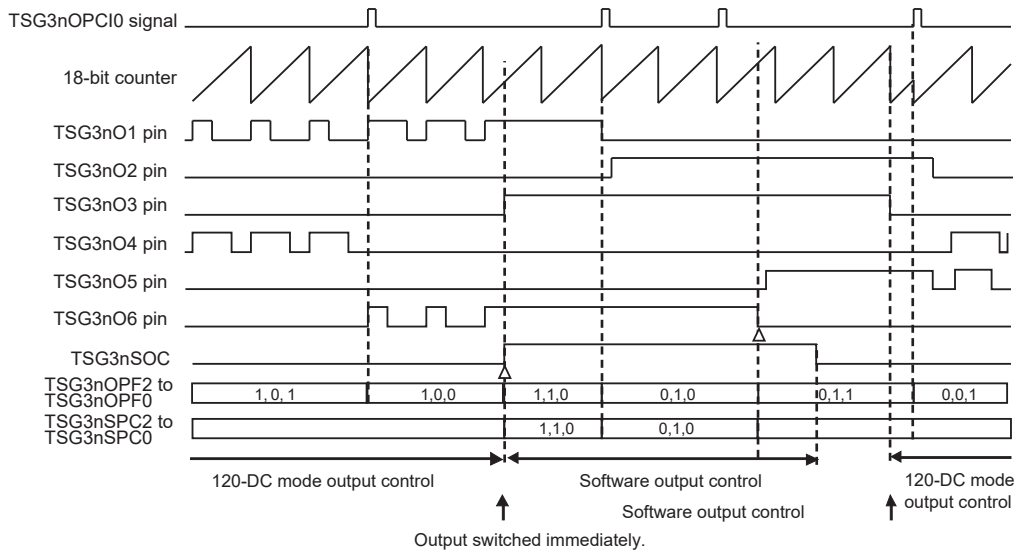

Note: Δ: Write access

Figure 25.98 Example of Switching from 120-DC Mode to Software Output Control Function

(a) Procedure for Software Output Control

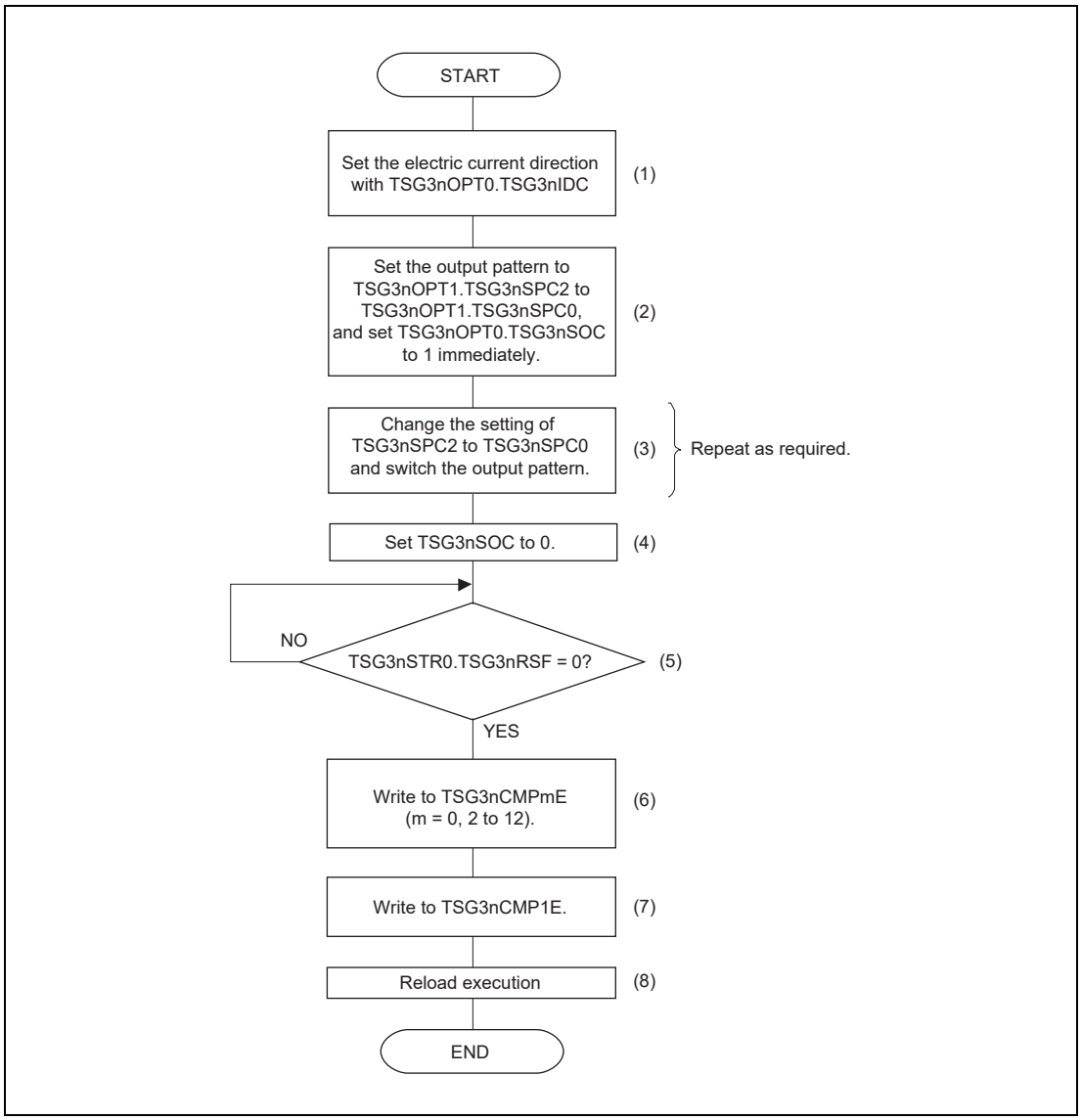

Figure 25.99 Process Flow of Software Output Control

The procedure for software output control is described below.

(1) Set the TSG3nIDC bit. The phase of the timer output with TSG3nIDC = 0 is different by 180 degrees from that with TSG3nIDC = 1. With the software output control function, the timer output will not change only by rewriting this bit. However, if the period match occurs before step (2), the output pattern of 120-DC control changes. So, schedule so as to prevent the period match from occurring before step (2).

(2) Set the output pattern to TSG3nSPC2 to TSG3nSPC0. To enable software output control, set TSG3nSOC to 1 simultaneously.

(3) Change the output pattern setting of TSG3nSPC2 to TSG3nSPC0 to change the timer output.

(4) Confirm that the reload request flag (TSG3nRSF) = 0. If TSG3nRFS = 1, do not proceed to the following step until TSG3nRSF = 0.

(5) By setting TSG3nSOC = 0 the software control starts to be released (it is not released here yet).

(6) After releasing the software output control, set the necessary compare registers. Proceed to the following step when the register setting is not required. Here, change the registers with the reload function.

(7) Write to TSG3nCMP1E to start reloading.

(8) Reload is executed and software output is released.

CAUTION

Execute reload after executing steps (4) to (7). When reload cannot be executed, the software output cannot be released.

25.4.7.5 HSP-PWM Mode (High accuracy Shifted-pulse - Pulse Width Modulation Mode)

Overview

In this mode, the 18-bit counter and the 18-bit compare register are used to generate a high accuracy sawtooth waveform PWM signal.

Prerequisites

- Set the PWM period to TSG3nCMP0E.
- Set PWM output width with the TSG3nHSPCMUE, TSG3nHSPCMVE, and TSG3nHSPCMWE registers. Set PWM shift width with the TSG3nHSPSHUE, TSG3nHSPSHVE, and TSG3nHSPSHWE registers. Set dead time with the TSG3nDTC0W and TSG3nDTC1W registers. The values set in these registers are immediately reflected in the corresponding TSG3nCMPmE (m = 1 to 12) based on the calculation described later.

Functional description

Set the PWM period, the dead time, and the PWM shift width. Then set the PWM output width. Counting up begins when TSG3nTRG0.TSG3nTS is set to 1.

The 18-bit counter starts counting from 00000_H and is cleared by the match with TSG3nCMP0E.

During counting, a compare match interrupt (INTTSG3nI0 to INTTSG3nI12) is generated by the match of the buffer register TSG3nCMP0E to TSG3nCMP12E with the 18-bit counter.

NOTE

The HSP-PWM mode is set when TSG3nCTL0.TSG3nMD2-TSG3nMD0 = 100_B.

(1) Basic Timing Chart

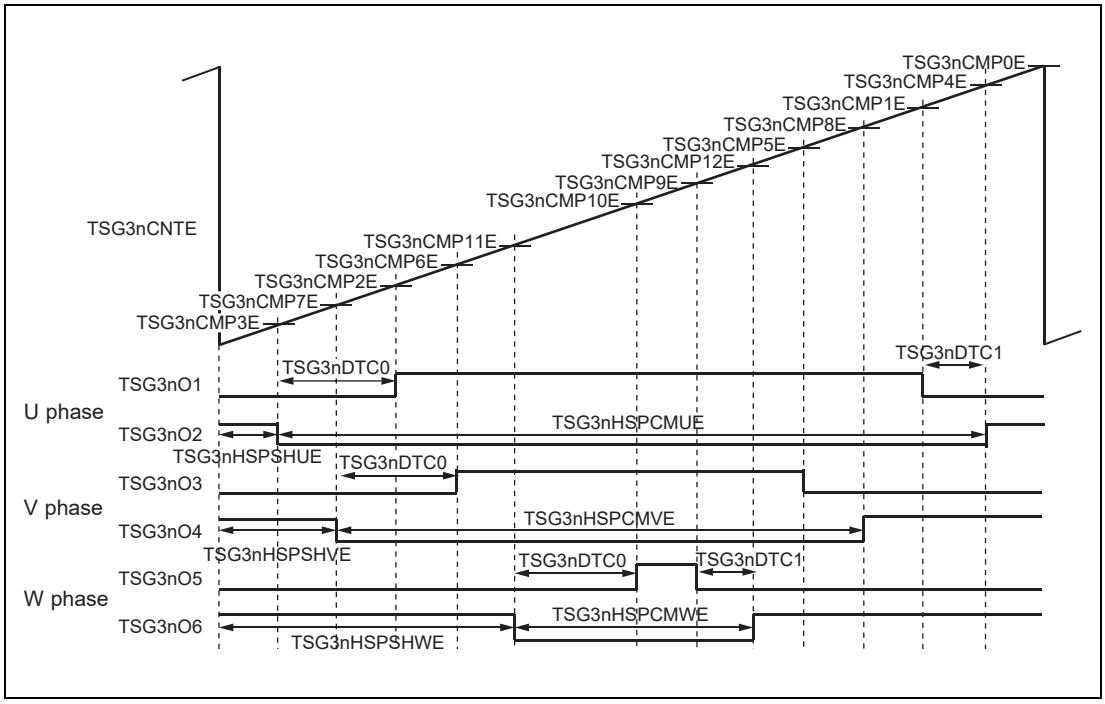

Figure 25.100 Basic Timing in HSP-PWM Mode

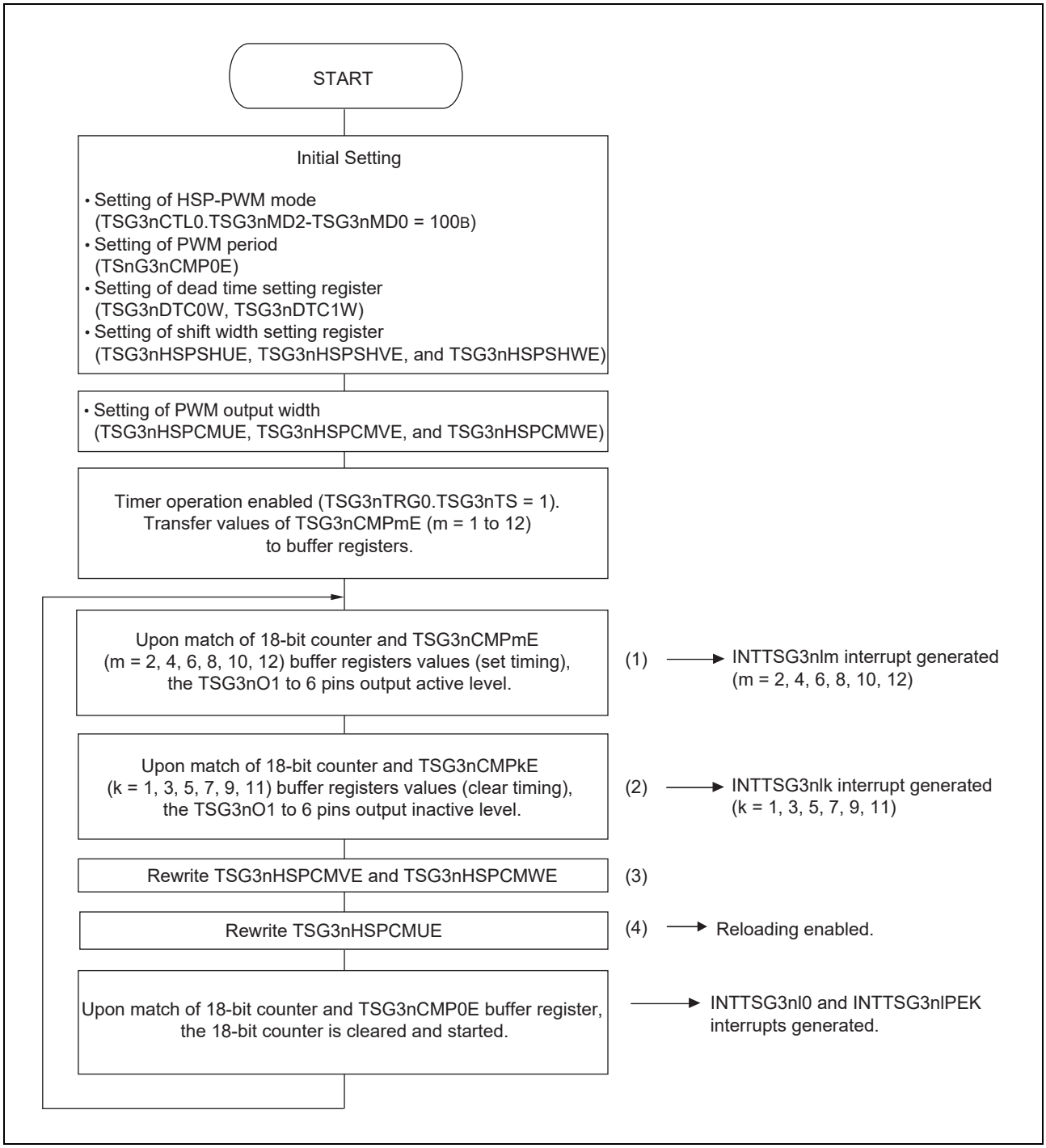

Figure 25.101 Basic Operation Flow in HSP-PWM Mode

NOTE

The timing may be different from the orders described above but be sure to execute (4) after (3).

CAUTIONS

1. **When changing the settings for PWM output width in the TSG3nHSPCMUE, VE, and WE registers during operation, set the TSG3nHSPCMUE register last. When**

only the settings for the V phase and W phase are changed but the PWM output width in the U phase is not, the existing value should be written back to the TSG3nHSPCMUE register.

2. **After changing the PWM cycle by using the TSG3nCMP0E register, the PWM output width settings in the TSG3nHSPCMUE, VE, and WE registers must be remade. Changing the settings for the PWM shift width in the TSG3nHSPSHUE, VE, and WE registers and for the PWM cycle in the TSG3nCMP0E register at the same time is not allowed.**
3. **Remake the settings for PWM output width in the TSG3nHSPCMUE, VE, and WE registers after changing the settings for PWM shift width in the TSG3nHSPSHUE, VE, and WE registers.**

(2) List of Operation in HSP-PWM

Table 25.93 Counter Function in HSP-PWM

Operation		Setting Condition
18-bit counter	Start	TSG3nTRG0.TSG3nTS = 0 → 1 or simultaneous start trigger
	Clear	Compare match of TSG3nCMP0E buffer register and 18-bit counter
	Stop	TSG3nTRG1.TSG3nTT = 0 → 1

Table 25.94 Functions of Compare Registers, Shift Width Setting Register, and Dead Time Setting Register in HSP-PWM

Register	Rewriting Method	Rewrite during Operation	Function
TSG3nCMP0E	Reload	Possible	Setting period
TSG3nHSPCMUE	Reload	Possible	PWM control for U phase
TSG3nHSPSHUE			
TSG3nHSPCMVE	Reload	Possible	PWM control for V phase
TSG3nHSPSHVE			
TSG3nHSPCMWE	Reload	Possible	PWM control for W phase
TSG3nHSPSHWE			
TSG3nDCMP0E, TSG3nDCMP1E, TSG3nDCMP2E	Reload	Possible	Diagnostic output or A/D conversion trigger
TSG3nDTC0W, TSG3nDTC1W	Reload	Prohibited	Dead time

Table 25.95 Timer Output in HSP-PWM Mode

Pin	Function
TSG3nO1	PWM output by compare match of the TSG3nCMP1E buffer register (clear timing) or the TSG3nCMP2E buffer register (set timing) with the 18-bit counter.
TSG3nO2	PWM output by compare match of the TSG3nCMP3E buffer register (clear timing) or the TSG3nCMP4E buffer register (set timing) with the 18-bit counter.
TSG3nO3	PWM output by compare match of the TSG3nCMP5E buffer register (clear timing) or the TSG3nCMP6E buffer register (set timing) with the 18-bit counter.
TSG3nO4	PWM output by compare match of the TSG3nCMP7E buffer register (clear timing) or the TSG3nCMP8E buffer register (set timing) with the 18-bit counter.
TSG3nO5	PWM output by compare match of the TSG3nCMP9E buffer register (clear timing) or the TSG3nCMP10E buffer register (set timing) with the 18-bit counter.
TSG3nO6	PWM output by compare match of the TSG3nCMP11E buffer register (clear timing) or the TSG3nCMP12E buffer register (set timing) with the 18-bit counter.
TSG3nO7	Diagnostic signal output or pulse output by A/D conversion trigger

Table 25.96 Interrupt Request in HSP-PWM Mode

Interrupt	Function
INTTSG3nIm (m = 0 to 12)	Compare match of the TSG3nCMPmE buffer register with 18-bit counter
INTTSG3nIER	Error
INTTSG3nIVLY	—
INTTSG3nIPEK	Peak interrupt (generated at the same timing as INTTSG3nI0)
INTTSG3nIWN	Error

Table 25.97 Compare Match Timing in HSP-PWM Mode

Compare Match	Timing
TSG3nCMP0E	When 18-bit counter changes from TSG3nCMP0E to 00000_H
TSG3nCMPmE (m = 1 to 12)	After match of 18-bit counter and TSG3nCMPmE

(3) Various Settings of HSP-PWM Mode

Mode setting

HSP-PWM mode is entered by setting TSG3nCTL0.TSG3nMD2-TSG3nMD0 to 100_B.

Setting timer output

The output pins TSG3nO1-6 are controlled by setting TSG3nIOC0, TSG3nIOC2, and TSG3nIOC3.

The TSG3nO7 pin provides output pulse as diagnostic output or A/D conversion trigger. The pin should be set as necessary.

Enabling error interrupt generation

Error interrupt (INTTSG3nIER) due to the detection of the simultaneous active state of positive and inverse phases is enabled by setting TSG3nIOC1.TSG3nEOC to 1. For details, see **Section 25.4.6, Error/Warning Interrupt**.

Setting rewriting timing of register with reload function

This function is only available in reload mode. Set TSG3nCTL3.TSG3nRMC to 0.

Setting A/D conversion trigger output

The A/D conversion trigger 0 (TSG3nADTRG0 signal) is set with TSG3nCTL5.TSG3nAT09-TSG3nAT00.

TSG3nAT09-TSG3n00 is used to enable or disable the A/D conversion trigger output on timing match of TSG3nDCMP2E-0E with 18-bit counter (up count).

TSG3nCTL6.TSG3nAT19-TSG3nAT10 is used to set the A/D conversion trigger 1 (TSG3nADTRG1 signal).

To set the match timing of the 18-bit counter and TSG3nDCMP2E-TSG3nDCMP0E, set the compare value to each register.

The skipping function can be used for TSG3nADTRG0, TSG3nADTRG1 signals. TSG3nACC01 and TSG3nACC00 of TSG3nCTL5, and TSG3nACC11 and TSG3nACC10 of TSG3nCTL6 can be used to select the skipping rate among 1/1, 1/2, 1/4, and 1/8.

CAUTION

- **Be sure to set TSG3nCTL5, TSG3nCTL6, and TSG3nDCMP2E-0E correctly when the timing pulse of A/D conversion trigger is output to TSG3nO7.**
- **In HSP-PWM mode, no valley interrupt (INTTSG3nIVLY) is generated. Therefore, SG3nCTL5.TSG3nAT00 and TSG3nCTL6.TSG3nAT10 must be set to 0.**
- **In HSP-PWM mode, the 18-bit sub-counter does not operate. Therefore, TSG3nCTL5.TSG3nAT09 and TSG3nAT08, and TSG3nCTL6.TSG3nAT19 and TSG3nAT18 must be set to 0.**
- **In HSP-PWM mode, down counting by the 18-bit counter is not generated. Therefore, TSG3nCTL5.TSG3nAT07, TSG3nAT05, and TSG3nAT03, and TSG3nCTL6.TSG3nAT17, TSG3nAT15, and TSG3nAT13 should be set to 0.**

Setting PWM period

Set the PWM period with TSG3nCMP0E according to the following expression:

PCLK × (TSG3nCMP0E + 1)

Setting PWM output width

The PWM output width is set with TSG3nHSPCMUE, TSG3nHSPCMVE, and TSG3nHSPCMWE (TSG3nCMP1E-12E).

Satisfy the following requirements when setting the TSG3nHSPCMUE, TSG3nHSPCMVE, and TSG3nHSPCMWE registers:

0 ≤ TSG3nHSPCMUE,TSG3nHSPCMVE, TSG3nHSPCMWE ≤ TSG3nCMP0E + TSG3nDTC0 + TSG3nDTC1 + 1

Set the PWM output width after setting TSG3nCMP0E, TSG3nHSPSHUE, TSG3nHSPSHVE, TSG3nHSPSHWE, TSG3nDTC0, and TSG3nDTC1.

Setting of PWM shift width

PWM shift width is set with TSG3nHSPSHUE, TSG3nHSPSHVE, and TSG3nHSPSHWE.

Satisfy the following requirements when setting TSG3nHSPSHUE, TSG3nHSPSHVE, and TSG3nHSPSHWE.

TSG3nHSPSHUE, TSG3nHSPSHVE, TSG3nHSPSHWE ≤ TSG3nCMP0E

Setting dead time

The dead time can be set with TSG3nDTC0 and TSG3nDTC1.

PCLK × TSG3nDTC0

PCLK × TSG3nDTC1

TSG3nDTC0 can set the time between a change of TSG3nO2, TSG3nO4, and TSG3nO6 to the inactive state and a change of TSG3nO1, TSG3nO3, and TSG3nO5 to the active state.

TSG3nDTC1 can set the time between a change of TSG3nO1, TSG3nO3, and TSG3nO5 to the inactive state and a change of TSG3nO2, TSG3nO4, and TSG3nO6 to the active state.

Satisfy the following requirements when setting TSG3nDTC0 and TSG3nDTC 1.

(TSG3nCMP0E + TSG3nDTC0 + TSG3nDTC1 + 1) < $3FFFF_H$

TSG3nCMP0E > 3 × TSG3nDTC0

TSG3nCMP0E > 3 × TSG3nDTC1

CAUTION

Do not modify the settings of TSG3nDTC0 and TSG3nDTC1 during timer operation in HSP-PWM (TSG3nTE = 1). Set TSG3nDTC0 and TSG3nDTC1 while TSG3nTE = 0.

Set dead time in HSP-PWM mode. Do not set 0 to TSG3nDTC0 and TSG3nDTC1.

Settings for operation in HSP-PWM Mode

Use HSP-PWM mode with the following settings of control registers and bits.

Do not modify the settings during operation (TSG3nTE = 1).

Table 25.98 Setting Prohibited in HSP-PWM Mode

Bit Name	Setting Value	Description
TSG3nCTL3.TSG3nRMC	0	Available only in reload mode.
TSG3nIOC3.TSG3nTOL6-1	000000_B	Logical inverse of set/clear of PWM is prohibited (HSP-PWM mode limitation)
TSG3nOPT0.TSG3nSOC	0	Switching to software control function is prohibited.
TSG3nOPT0.TSG3nSTE	0	Operation setting of 120-DC mode and software control function (value after reset).
TSG3nOPT0.TSG3nPOT	0	Operation setting of 120-DC mode and software control function (value after reset).
TSG3nOPT0.TSG3nPSS	0	Operation setting of 120-DC mode and software control function (value after reset).
TSG3nOPT0.TSG3nIDC	0	Operation setting of 120-DC mode and software control function (value after reset).
TSG3nOPT0.TSG3nPSC	0	Operation setting of 120-DC mode and software control function (value after reset).
TSG3nOPT1.TSG3nSPC2-0	000_B	Operation setting of 120-DC mode and software control function (value after reset).
TSG3nPAT0W	0000000_H	Operation setting of 120-DC mode (value after reset).
TSG3nPAT1W	0000000_H	Operation setting of 120-DC mode (value after reset).

CAUTION

In HSP-PWM mode, any setting should not be made directly to the TSG3nCMPmE register (m = 1 to 12).

The PWM output width and the PWM shift width should be set with TSG3nHSPCMUE, VE, and WE registers and TSG3nHSPSHUE, VE, and WE registers.

25.4.7.6 Compare Register Set Value in HSP-PWM Mode

In HSP-PWM mode, the PWM output width is set with TSG3nHSPCMUE, VE and WE.

With a write access to TSG3nHSPCMUE, VE, and WE, TSG3 calculates and sets the values to TSG3nCMP1E-12E based on the values written to the followings:

- TSG3nCMP0E (PWM period setting)
- TSG3nDTC0 (dead time setting 0)
- TSG3nDTC1 (dead time setting 1)
- TSG3nHSPSHUE/VE/WE (PWM shift width setting)
- TSG3nHSPCMUE/VE/WE (PWM output width setting)

The high accuracy PWM is realized by these values.

The algorithm to set compare register values are listed in the following table.

Table 25.99 Algorithm for Compare Setting in HSP-PWM Mode

Value Set In HSPCMUE					CMP4E	CMP3E	CMP2E	CMP1E
HSPCMUE = 0					if (HSPSHUE = 0) 0 else HSPCMUE – 1 + HSPSHUE	CMP0E + 1	0	0
0	<	HSPCMUE	≤	DTC0 + DTC1	HSPCMUE – 1 + HSPSHUE	if (HSPSHUE = 0) CMP0E else HSPSHUE – 1	0	0
DTC0 + DTC1	<	HSPCMUE	≤	CMP0E	HSPCMUE – 1 + HSPSHUE	if (HSPSHUE = 0) CMP0E else HSPSHUE – 1	DTC0 – 1 + HSPSHUE	HSPCMUE – DTC1 – 1 + HSPSHUE
CMP0E	<	HSPCMUE	≤	CMP0E + DTC1 + 1	0	0	DTC0 – 1 + HSPSHUE	HSPCMUE – DTC1 – 1 + HSPSHUE
CMP0E + DTC1 + 1	<	HSPCMUE	<	CMP0E + DTC0 + DTC1 + 1	0	0	DTC0 – 1 + HSPSHUE	HSPCMUE – CMP0E – DTC1 – 2 + HSPSHUE
HSPCMUE = CMP0E + DTC0 + DTC1 + 1					0	0	DTC0 – 1 + HSPSHUE	CMP0E + 1

: For the colored sells, subtract CMP0E + 1 when the calculated result is greater than CMP0E.

NOTE

"TSG3n" is omitted from the register names used in the calculation.

25.4.7.7 Timer Output Operation in HSP-PWM Mode

TSG3nO1-6 output is set by compare match of TSG3nCNTE with each TSG3nCMP2E, 4E, 6E, 8E, 10E, and 12E, and cleared by compare match of TSG3nCNTE with each TSG3nCMP1E, 3E, 5E, 7E, 9E, and 11E.

When PWM output width is set in TSG3nHSPCMUE,VE, and WE, the value is set in the TSG3nCMP1E-12E registers based on the calculation described in **Section 25.4.7.6, Compare Register Set Value in HSP-PWM Mode** that enables a high accuracy PWM output from 0% to 100%.

PWM output timing can be shifted by setting desired width to TSG3nHSPSHUE, VE, WE.

(1) When TSG3nHSPCMUE, VE, and WE (PWM output width setting) set value is 0

When 0 is set to TSG3nHSPCMUE (U phase PWM output width setting), 0 is set to TSG3nCMP1E, 2E, and 4E, and “TSG3nCMP0E+1” is set to TSG3nCMP3E.

Setting of TSG3nO1 by the match of TSG3nCNTE with TSG3nCMP2E and clearing by the match with TSG3nCMP1E occurs simultaneously. Here, clearing prevails on setting, therefore, TSG3nO1 is fixed to inactive.

Setting of TSG3nO2 by the match of TSG3nCNTE with TSG3nCMP4E occurs when TSG3nCNTE = 0.

“TSG3nCMP0E + 1” is set to TSG3nCMP3E. Here, with no match of TSG3nCNTE with TSG3nCMP3E occurs, TSG3nO2 is fixed to active.

The same condition applies to TSG3nO3-6, which are the output pins for V phase and W phase when 0 is set to TSG3nHSPCMVE (V phase PWM output width setting) and TSG3nHSPCMWE (W phase PWM output width setting).

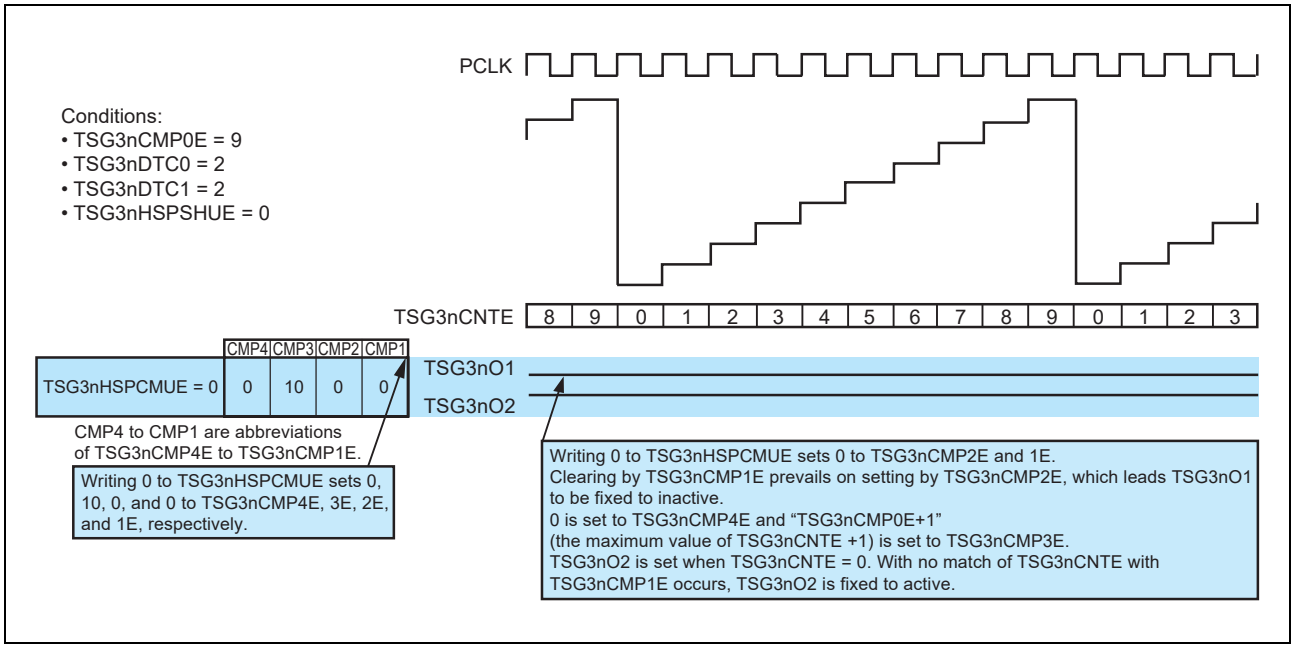

Figure 25.102 Waveform in HSP-PWM Mode (0 is set to TSG3nHSPCMUE)

(2) When TSG3nHSPCMUE/VE/WE (PWM output width setting) set value is 0 < TSG3nHSPCMUE ≤ TSG3nDTC0 + TSG3nDTC1

When the value within this range is set to TSG3nHSPCMUE (U phase PWM output width setting), 0 is set to TSG3nCMP1E and 2E, “the TSG3nHSPCMUE set value - 1” is set to TSG3nCMP4E, and the value same as TSG3nCMP0E is set to TSG3nCMP3E.

Setting of TSG3nO1 by the match of TSG3nCNTE with TSG3nCMP2E and clearing by the match with TSG3nCMP1E occurs simultaneously. Here, clearing prevails on setting, therefore, TSG3nO1 is fixed to inactive.

TSG3nO2 is cleared by the match of TSG3nCNTE with TSG3nCMP3E and set by the match with TSG3nCMP4E. Here, the output is shifted according to the set value in TSG3nHSPCMUE, that is, inactive for one cycle during PWM period when 1 is set, two cycles when 2 is set, and three cycles when 3 is set.

When the value other than 0 is set to TSG3nHSPSHUE (PWM shift width), set/clear timing of TSG3nO2 is shifted to the right for the number of cycles set in TSG3nHSPSHUE.

The same condition applies to TSG3nO3-6, which are the output pins for V phase and W phase when the value of “0 < TSG3nHSPCMUE ≤ TSG3nDTC0 + TSG3nDTC1” is set to TSG3nHSPCMVE (V phase PWM output width setting) and TSG3nHSPCMWE (W phase PWM output width setting).

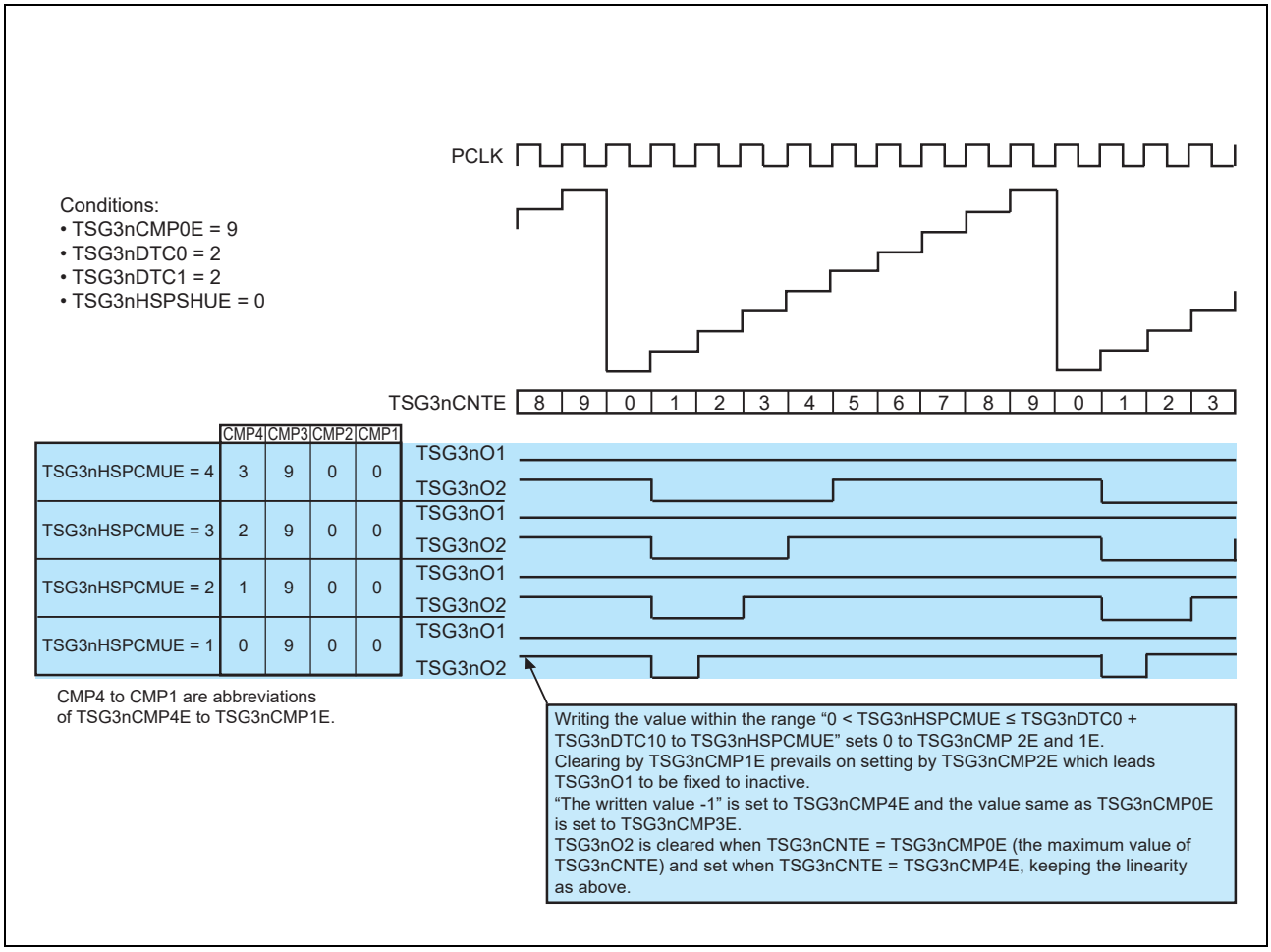

Figure 25.103 Waveform in HSP-PWM Mode (TSG3nHSPCMUE is set to 0 < TSG3nHSPCMUE ≤ TSG3nDTC0 + TSG3nDTC1)

(3) When TSG3nHSPCMUE/VE/WE (PWM Output Width Setting) set value is TSG3nDTC0 + TSG3nDTC1 <TSG3nHSPCMUE/VE/WE ≤ TSG3nCMP0E

When the value within this range is set to TSG3nHSPCMUE (U phase PWM output width setting), “TSG3nDTCD0 -1” is set to TSG3nCMP2E, “TSG3nHSPCMUE - TSG3nDTC1 - 1” is set to TSG3nCMP1E, “TSG3nHSPCMUE - 1” is set to TSG3nCMP4E, and the value same as TSG3nCMP0E is set to TSG3nCMP3E.

TSG3nO1 is set by the match of TSG3nCNTE with TSG3nCMP2E and cleared by the match with TSG3nCMP1E while TSG3nO2 is set by the match of TSG3nCNTE with TSG3nCMP4E and cleared by the match with TSG3nCMP3E

Here, the outputs are shifted according to the set value in TSG3nHSPCMUE, that is, when “TSG3nDTC0 + TSG3nDTC1 + 1” is set, TSG3nO1 is active for one cycle during PWM period and TSG3nO2 is inactive for the cycles of “TSG3nDTC0 + TSG3nDTC1+ 1” during PWM period. On the other hand, when “TSG3nDTC0 + TSG3nDTC1 + 2” is set, TSG3nO1 is active for two cycles during PWM period and TSG3nO2 is inactive for the cycles of “TSG3nDTC0 + TSG3nDTC1+ 2” during PWM period.

When the value other than 0 is set to TSG3nHSPSHUE (PWM shift width), set/clear timing of TSG3nO1 and TSG3nO2 are shifted for the number of cycles set in TSG3nHSPSHUE to the right.

The same condition applies to TSG3nO3-6, which are the output pins for V phase and W phase when the value of above range is set to TSG3nHSPCMVE (V phase PWM output width setting) and TSG3nHSPCMWE (W phase PWM output width setting).

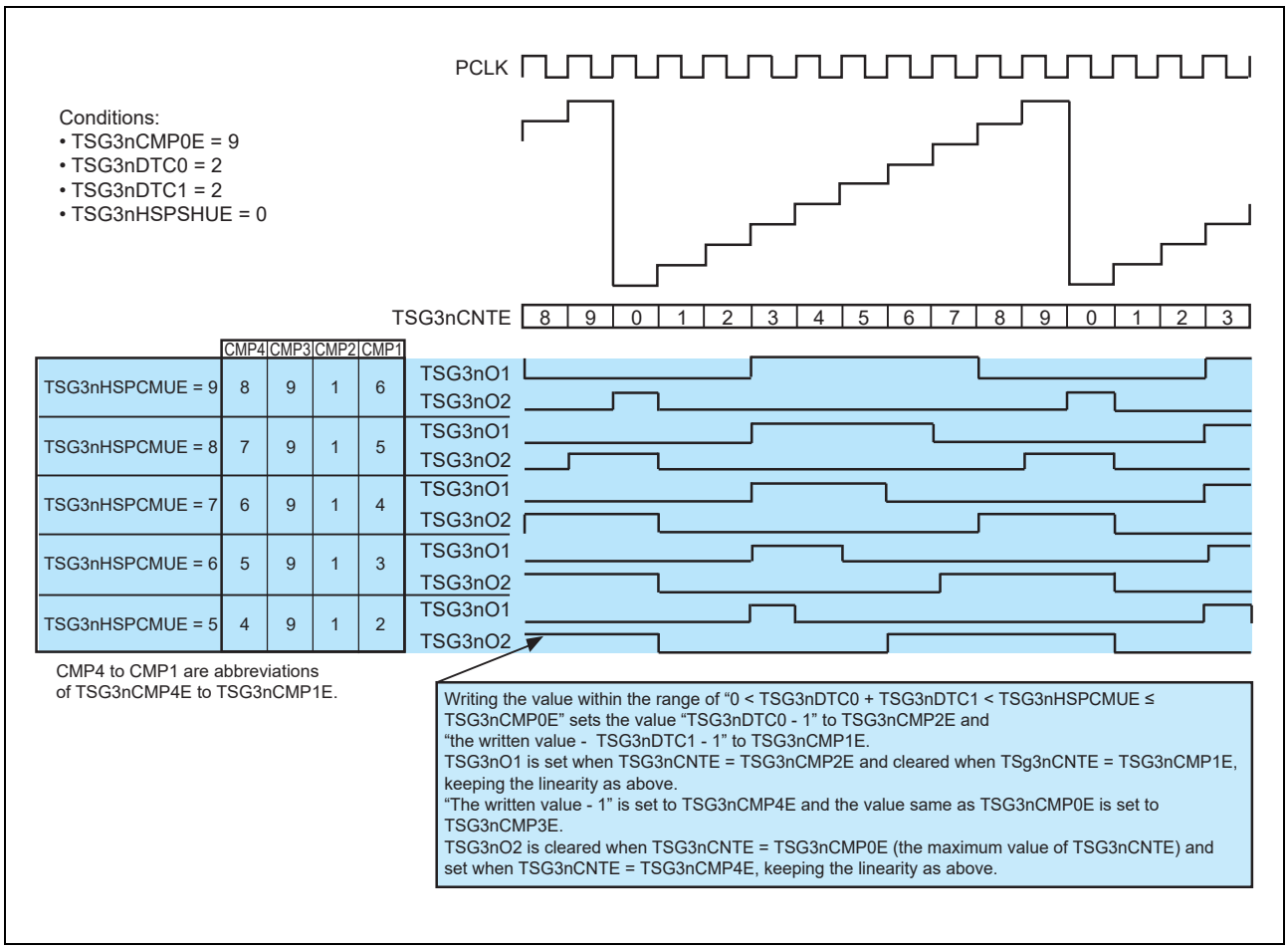

Figure 25.104 Waveform in HSP-PWM Mode (TSG3nHSPCMUE is set to TSG3nDTC0 + TSG3nDTC1 < TSG3nHSPCMUE ≤ TSG3nCMP0E)

(4) When TSG3nHSPCMUE/VE/WE (PWM Output Width Setting) set value is TSG3nCMP0E < TSG3nHSPCMUE/VE/ WE < TSG3nCMP0E + TSG3nDTC1 + 1

When the value within this range is set to TSG3nHSPCMUE (U phase PWM output width setting), “TSG3nDTC0 - 1” is set to TSG3nCMP2E, “TSG3nHSPCMU - TSG3nDTC1 - 1” is set to TSG3nCMP1E, and 0 is set to TSG3nCMP3E and 4E.

TSG3nO1 is cleared by the match of TSG3nCNTE with TSG3nCMP1E and set by the match with TSG3nCMP2E.

Here, the output is shifted according to the set value in TSG3nHSPCMUE, that is, inactive for the cycles of “TSG3nDTC0 + TSG3nDTC1” during PWM period when “TSG3nCMP0E + 1” is set, inactive for the cycles of “TSG3nDTC0 + TSG3nDTC1 - 1” during PWM period when “TSG3nCMP0E + 2” is set.

Setting of TSG3nO2 by the match of TSG3nCNTE with TSG3nCMP4E and clearing by the match with TSG3nCMP3E occurs simultaneously. Here, clearing prevails on setting, therefore, TSG3nO2 is fixed to inactive.

When the value other than 0 is set to TSG3nHSPSHUE (PWM shift width), set/clear timing of TSG3nO1 is shifted to the right for the number of cycles set in TSG3nHSPSHUE.

The same condition applies to TSG3nO3-6, which are the output pins for V phase and W phase when the value of above range is set to TSG3nHSPCMVE (V phase PWM output width setting) and TSG3nHSPCMWE (W phase PWM output width setting).

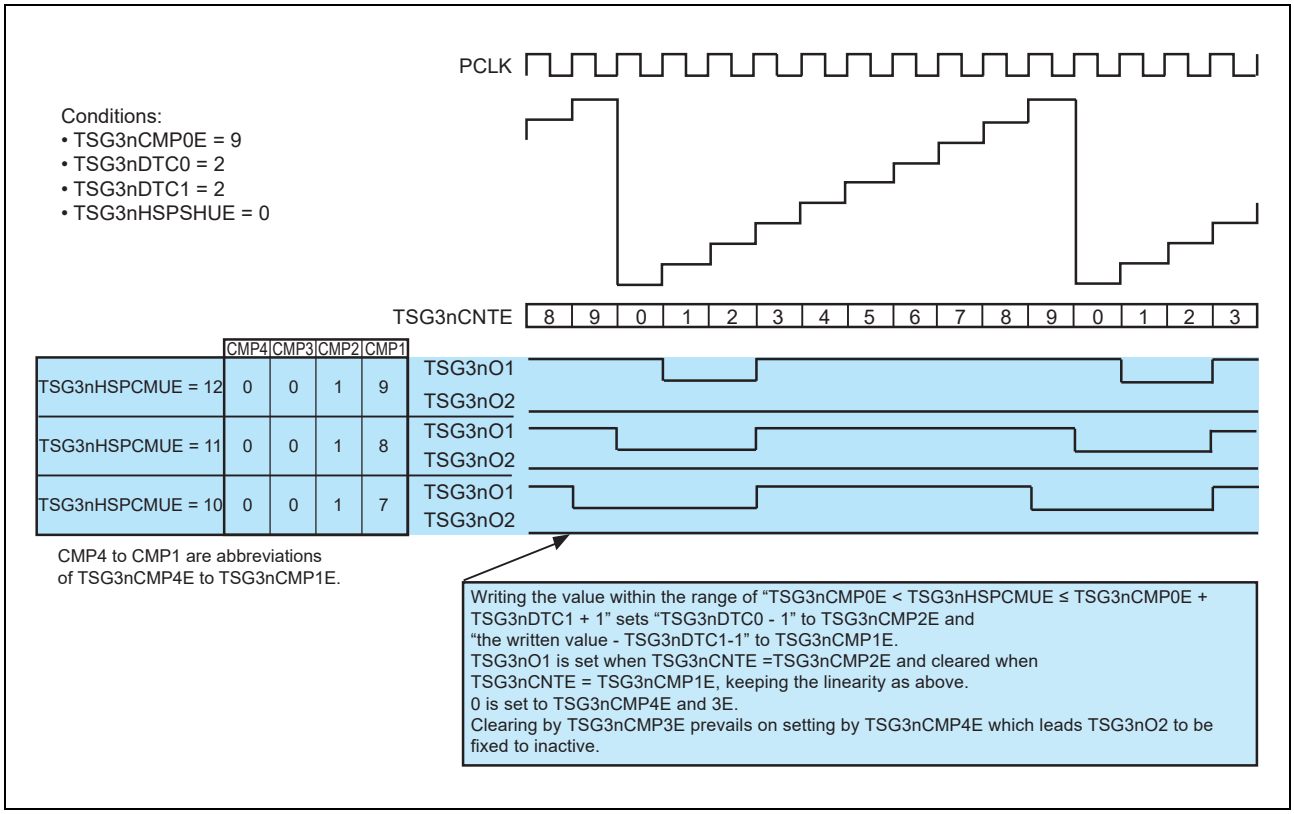

Figure 25.105 Waveform in HSP-PWM Mode (TSG3nHSPCMUE is set to TSG3nCMP0E < TSG3nHSPCMUE < TSG3nCMP0E + TSG3nDTC1 + 1)

(5) When TSG3nHSPCMUE/VE/WE (PWM Output Width Setting) set value is TSG3nCMP0E + TSG3nDTC1 + 1 < TSG3nHSPCMUE/VE/WE < TSG3nCMP0E + TSG3nDTC0 + TSG3nDTC1 + 1

When the value within this range is set to TSG3nHSPCMUE (U phase PWM output width setting), “TSG3nDTC0 - 1” is set to TSG3nCMP2E, “TSG3nHSPCMUE - TSG3nCMP0E - TSG3nDTC1 - 2” is set to TSG3nCMP1E, and 0 is set to TSG3nCMP3E and 4E.

TSG3nO1 is cleared by the match of TSG3nCNTE with TSG3nCMP1E and set by the match with TSG3nCMP2E.

Here, the output is shifted according to the set value in TSG3nHSPCMUE, that is, inactive for one cycle during PWM period when “TSG3nCMP0E + TSG3nDTC0 + TSG3nDTC1” (the maximum value of PWM output width - 1) is set, inactive for two cycles during PWM period when “TSG3nCMP0E + TSG3nDTC0 + TSG3nDTC1 - 1” (the maximum value of PWM output width - 2) is set.

Setting of TSG3nO2 by the match of TSG3nCNTE with TSG3nCMP4E and clearing by the match with TSG3nCMP3E occurs simultaneously. Here, clearing prevails on setting, therefore, TSG3nO2 is fixed to inactive.

When the value other than 0 is set to TSG3nHSPSHUE (PWM shift width), set/clear timing of TSG3nO1 is shifted to the right for the number of cycles set in TSG3nHSPSHUE.

The same condition applies to TSG3nO3-6, which are the output pins for V phase and W phase when the value of above range is set to TSG3nHSPCMVE (V phase PWM output width setting) and TSG3nHSPCMWE (W phase PWM output width setting).

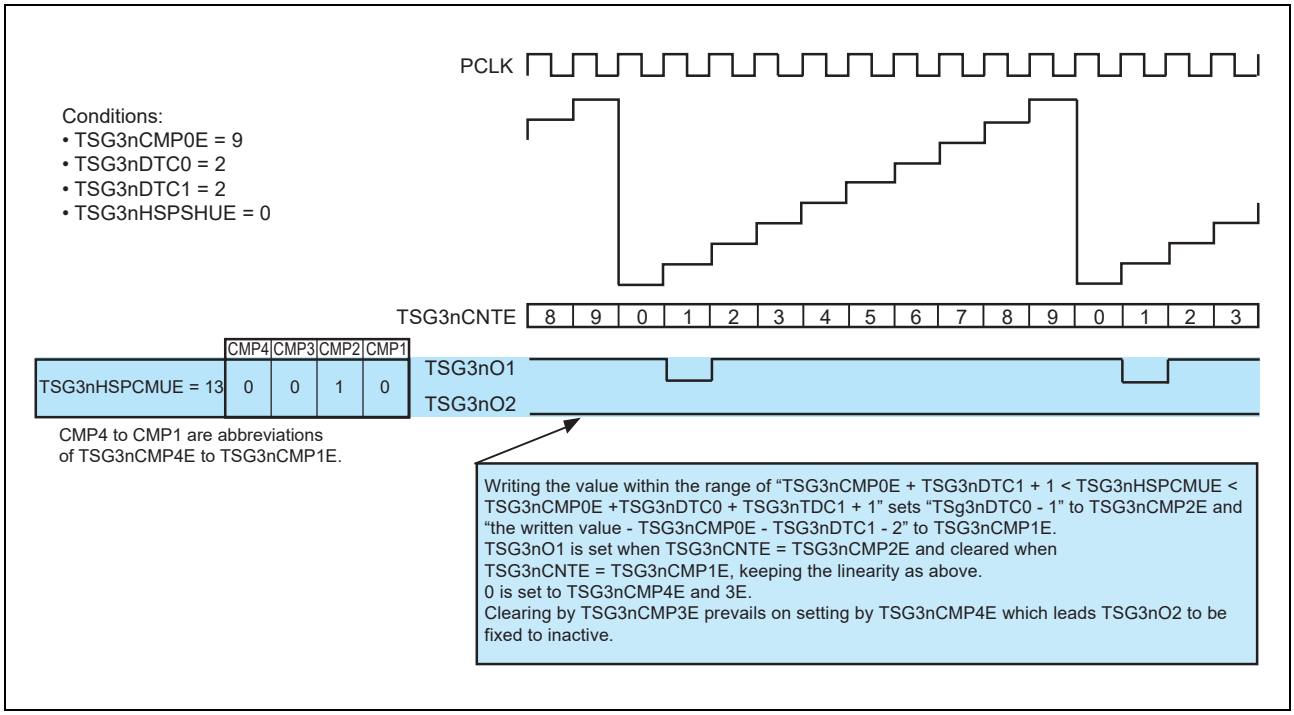

Figure 25.106 Waveform in HSP-PWM Mode (TSG3nHSPCMUE is set to TSG3nCMP0E + TSG3nDTC1 + 1 < TSG3nHSPCMUE < TSG3nCMP0E + TSG3nDTC0 + TSG3nDTC1 + 1)

(6) When TSG3nHSPCMUE/VE/WE (PWM Output Width Setting) set value is TSG3nCMP0E + TSG3nDTC0 + TSG3nDTC1 + 1

When “TSG3nCMP0E + TSG3nDTC0 + TSG3nDTC1” (the maximum value of PWM output width) is set to TSG3nHSPCMUE, “TSG3nDTC0 - 1” is set to TSG3nCMP2E, “TSG3nCMP0E + 1” is set to TSG3nCMP1E, and 0 is set to TSG3nCMP3E and 4E.

Setting of TSG3nO1 by the match of TSG3nCNTE with TSG3nCMP2E occurs when TSG3nCNTE = TSG3nDTC0 - 1.

“TSG3nCMP0E + 1” is set to TSG3nCMP3E. Here, with no match of TSG3nCNTE with TSG3nCMP3E occurs, TSG3nO1 is fixed to active.

Setting of TSG3nO2 by the match of TSG3nCNTE with TSG3nCMP4E and clearing by the match with TSG3nCMP3E occurs simultaneously. Here, clearing prevails on setting, therefore, TSG3nO2 is fixed to inactive.

When the value other than 0 is set to TSG3nHSPSHUE, set/clear timing of TSG3nO1 is shifted to the right for the number of cycles set in TSG3nHSPSHUE. Note that the set timing is shifted only at operation start (TSG3nTE = 1) because TSG3nO1 output is fixed to active. For the operation when operation start, see **Section 25.4.7.7**, **(8) TO Operation at Operation Start in HSP-PWM Mode**.

The same condition applies to TSG3nO3-6, which are the output pins for V phase and W phase when the value of above range is set to TSG3nHSPCMVE (V phase PWM output width setting) and TSG3nHSPCMWE (W phase PWM output width setting).

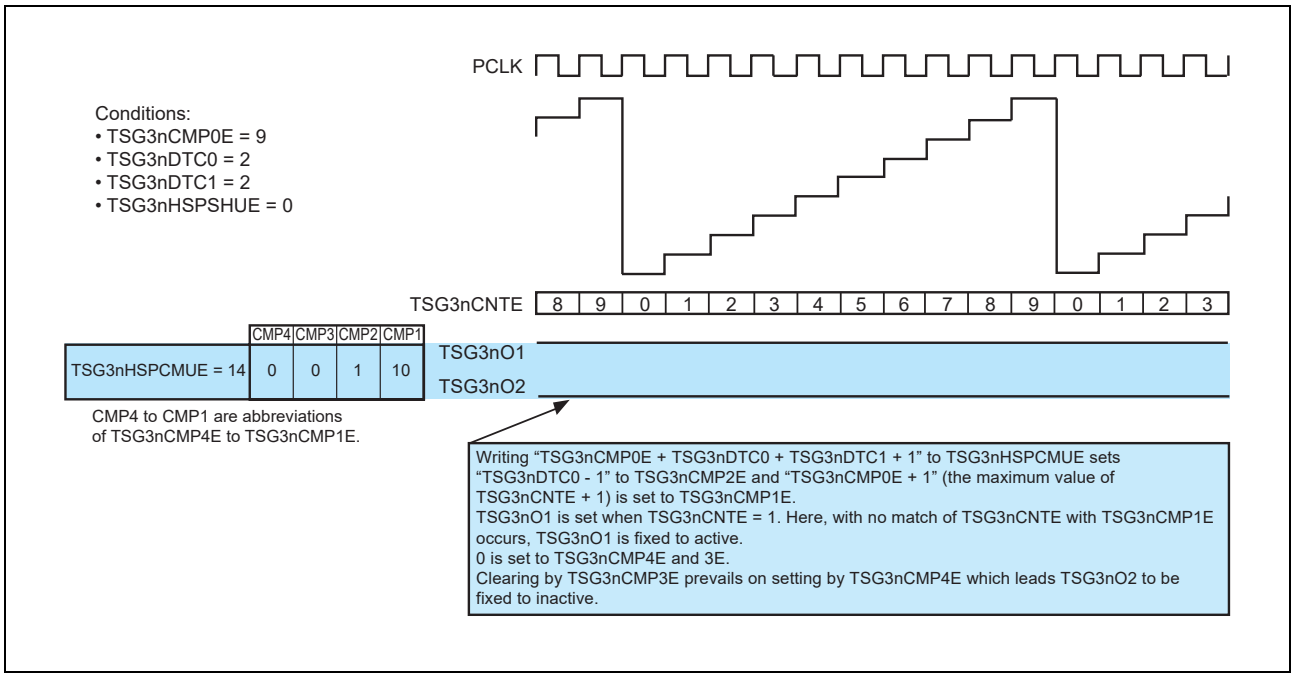

Figure 25.107 Waveform in HSP-PWM (TSG3nHSPCMUE is set to TSG3nCMP0E + TSG3nDTC0 + TSG3nDTC1 + 1)

NOTES

1. In HSP-PWM mode, TSG3nO1 and TSG3nO2 can be set at the same timing by setting the same value to TSG3nCMP4E and 2E. In this case, both TSG3nO1 and TSG3nO2 go inactive.
2. In HSP-PWM mode, dead time counter keeps operating even when TSG is stopped (TSG3nTE = 0) and the dead time set in TSG3nO1 and TSG3nO2 are always inserted.

(7) PWM Adjustment at Reload Timing in HSP-PWM Mode

In HSP-PWM mode, PWM output width is adjusted when TSG3nHSPCMUE/VE/WE (PWM output width setting) is modified during operation. TSG3nO1-6 are set/cleared at reload timing and immediately switched to the output reflecting the new PWM output width.

TSG3nO1-6 are forcibly set/cleared according to the following formula. Even for adjustment, the dead time set to TSG3nDTC0 and 1 is always inserted to TSG3nO1-6. If values are directly written to TSG3nCMP1-12E, output adjustment is not performed at reload timing.

Formula for reload adjustment operation

Table 25.100 Formula for Reload Adjustment Operation When TSG3nHSPSHUE/VE/WE is 0 (PWM shift width is set to 0)

Pin	Set	Clear
TSG3nO1/3/5	CMP0E + DTC1 + 1 < HSPCMUE/VE/WE	HSPCMUE/VE/WE ≤ CMP0E + DTC1 + 1
TSG3nO2/4/6	HSPCMUE/VE/WE = 0	0 < HSPCMUE/VE/WE

Table 25.101 Formula for Reload Adjustment Operation When TSG3nHSPSHUE/VE/WE is not 0 (PWM shift width is not set to 0)

Pin	Set		Clear
TSG3nO1/3/5	(i)	CMP0E + DTC1 + 1 – HSPSHUE/VE/WE < HSPCMUE/VE/WE	HSPCMUE/VE/WE ≤ CMP0E + DTC1 + 1 – HSPSHUE/VE/WE
	(ii)	(CMP0E + 1) × 2 + DTC1 – HSPSHUE/VE/WE < HSPCMUE/VE/WE	HSPCMUE/VE/WE ≤ (CMP0E + 1) × 2 + DTC1 – HSPSHUE/VE/WE
TSG3nO2/4/6	HSPCMUE/VE/WE ≤ CMP0E + 1 – HSPSHUE/VE/WE		CMP0E + 1 – HSPSHUE/VE/WE < HSPCMUE/VE/WE

If the value other than 0 is set as PWM shift width, set/clear condition for positive phase is determined whether the set shift width is greater than “CMP0E + DTC0 – 1” or not.

(i) HSPSHUE/VE/WE ≤ CMP0 – DTC0 + 1

(ii) HSPSHUE/VE/WE > CMP0 – DTC0 + 1

“TSG3n” is omitted from the register names used in the calculation.

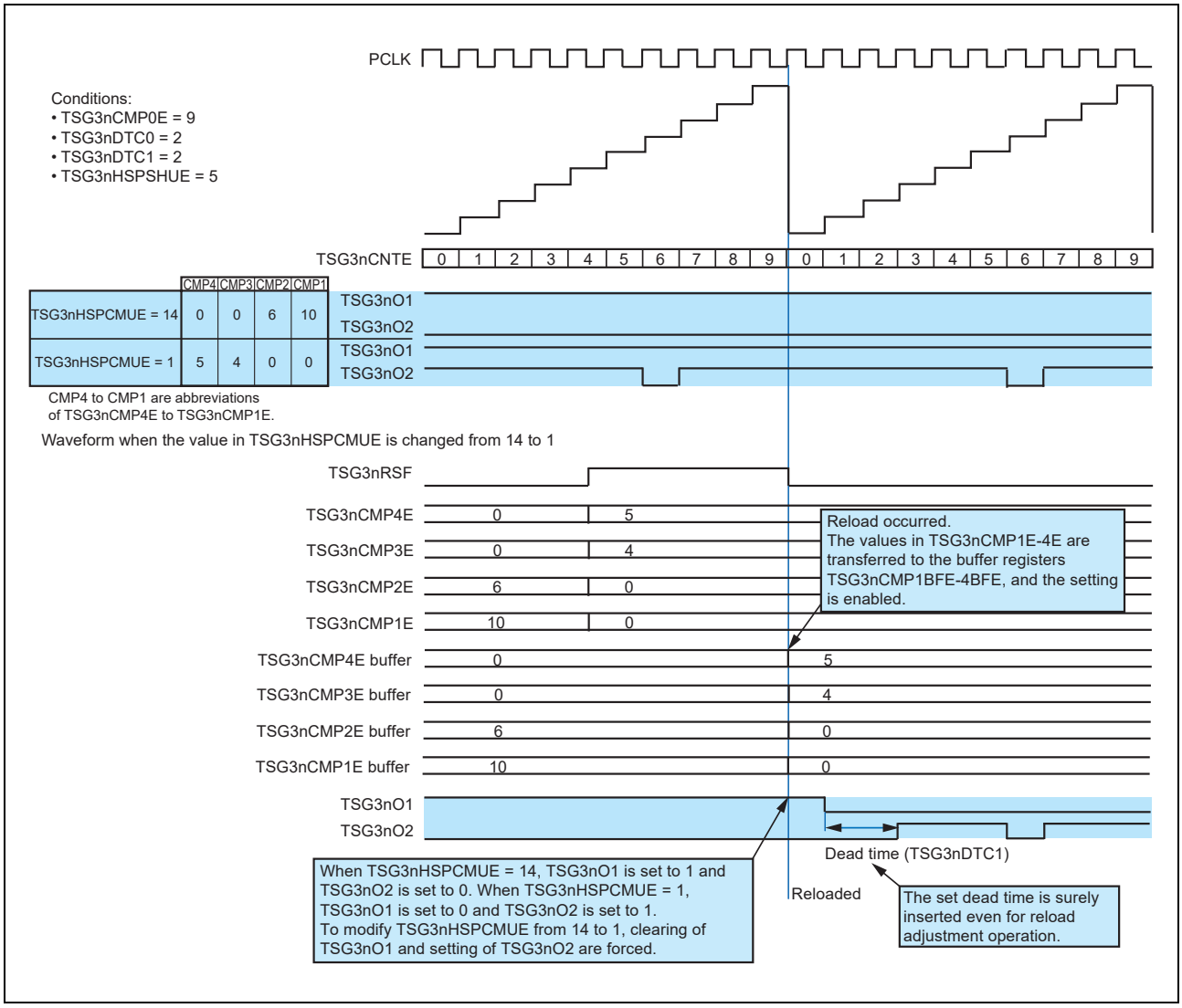

Figure 25.108 Detailed Timing Diagram of Reload Adjustment (Modification of TSG3nHSPCMUE from 14 to 1)

(8) TO Operation at Operation Start in HSP-PWM Mode

In HSP-PWM mode, TSG3nO1-6 are cleared when operation starts.

Then, TSG3nO1-6 are set/cleared as TSG3nCNTE counts up depending on the values set in TSG3nHSPCMUE/VE/WE (TSG3nCMP1E to 12E).

Even if TSG3nO1-6 are set before operation start and cleared at operation start, and then set again, the set dead time is always inserted.

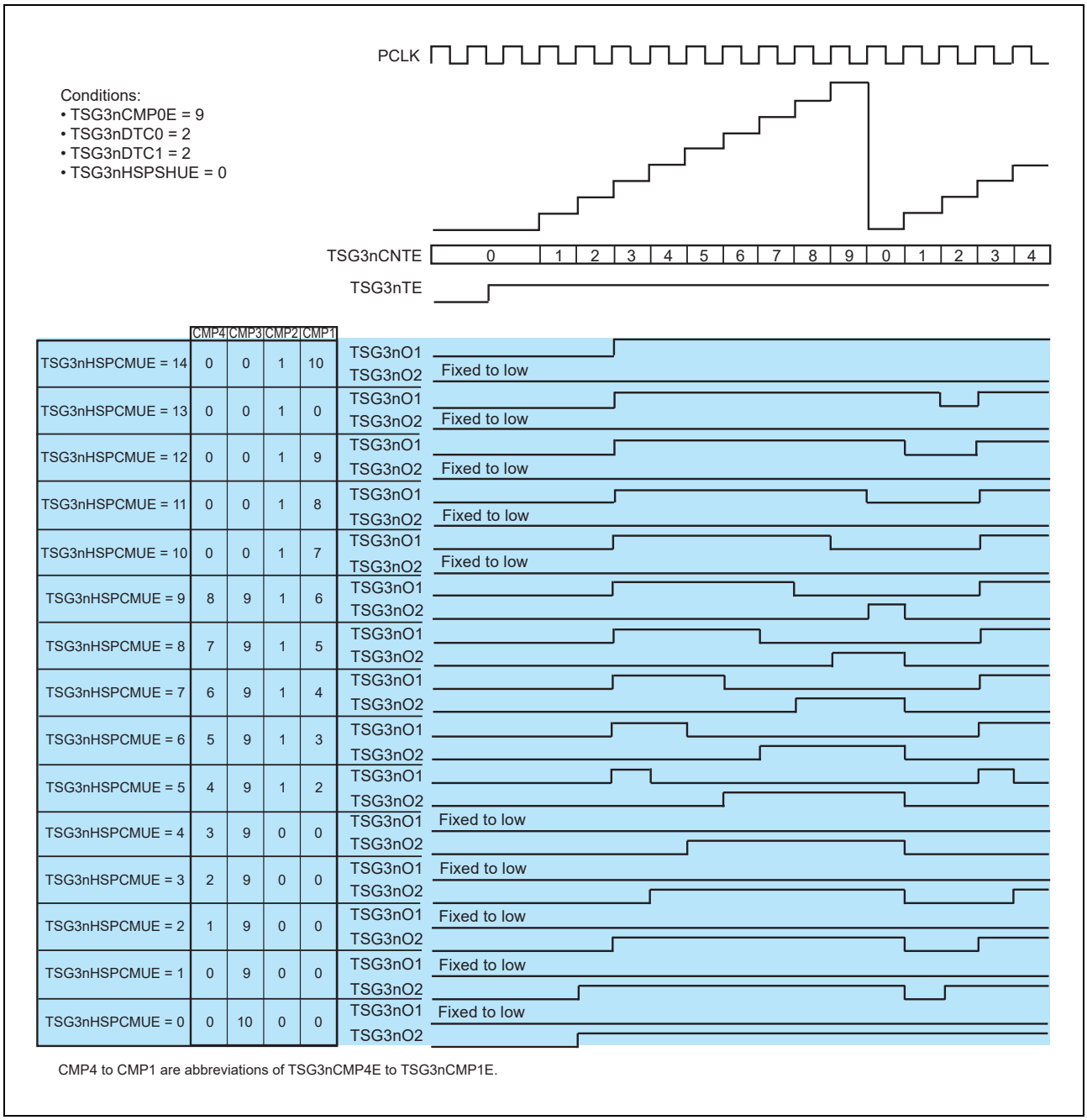

Figure 25.109 Timing Diagram of Operation Start in HSP-PWM Mode (TSG3nHSPSHUE = 0 (shift width is set to 0))

Conditions:
- TSG3nCMP0E = 9
- TSG3nDTC0 = 2
- TSG3nDTC1 = 2
- TSG3nHSPSHUE = 5

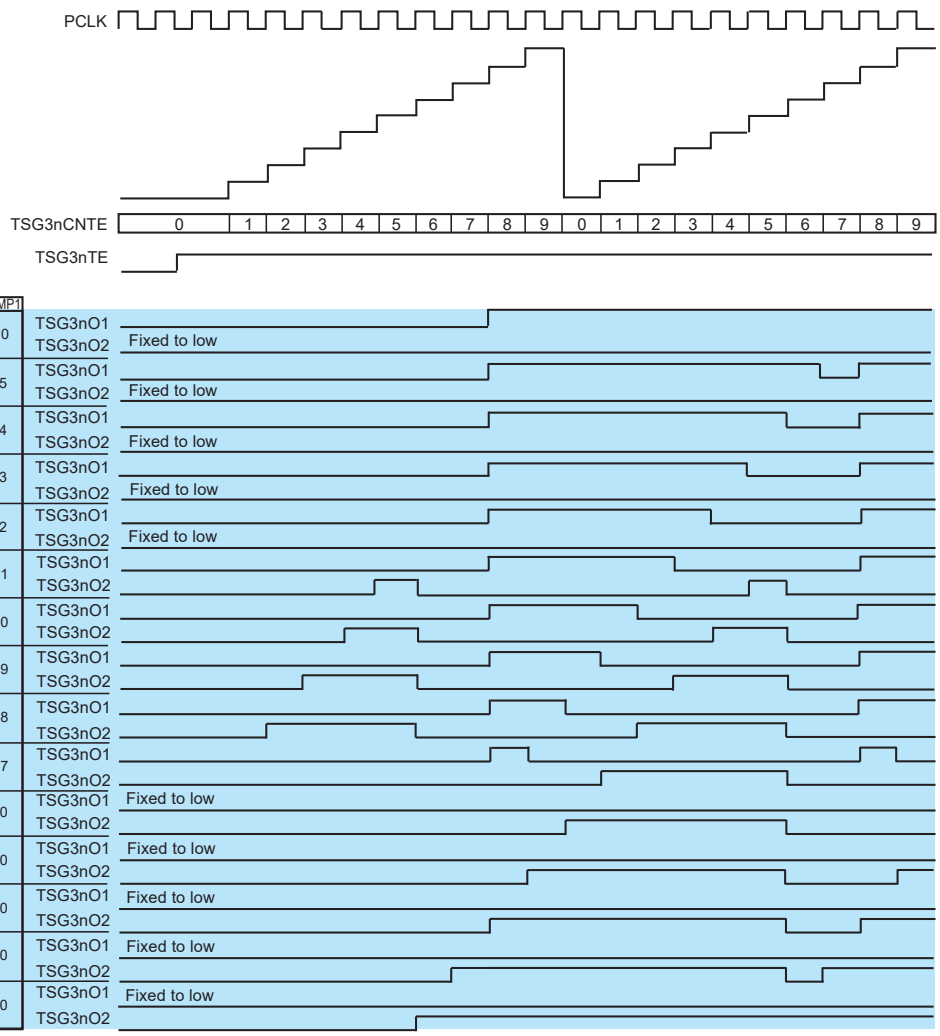

	CMP4	CMP3	CMP2	CMP1
TSG3nHSPCMUE = 14	0	0	6	10
TSG3nHSPCMUE = 13	0	0	6	5
TSG3nHSPCMUE = 12	0	0	6	4
TSG3nHSPCMUE = 11	0	0	6	3
TSG3nHSPCMUE = 10	0	0	6	2
TSG3nHSPCMUE = 9	3	4	6	1
TSG3nHSPCMUE = 8	2	4	6	0
TSG3nHSPCMUE = 7	1	4	6	9
TSG3nHSPCMUE = 6	0	4	6	8
TSG3nHSPCMUE = 5	9	4	6	7
TSG3nHSPCMUE = 4	8	4	0	0
TSG3nHSPCMUE = 3	7	4	0	0
TSG3nHSPCMUE = 2	6	4	0	0
TSG3nHSPCMUE = 1	5	4	0	0
TSG3nHSPCMUE = 0	4	10	0	0

CMP4 to CMP1 are abbreviations of TSG3nCMP4E to TSG3nCMP1E.

Figure 25.110 Timing Diagram of Operation Start in HSP-PWM Mode (TSG3nHSPSHUE = 5 (shift width is set to five clock cycles))

25.4.7.8 Software Output Control Function

Software output control function is available in any mode except HSP-PWM mode. This function can switch six output patterns for the TSG3nO1 to TSG3nO6 pins using TSG3nOPT0.TSG3nSOC, TSG3nIDC, and TSG3nOPT0.TSG3nSPC2-0.

When TSG3nSOC is switched from 0 to 1, the output control method of the TSG3nO1 to TSG3nO6 pins is switched to the software output control immediately. On the contrast, when TSG3nSOC is switched from 1 to 0, the software output control is released at the reload timing.

Table 25.102 Registers Associated with Software Output Control Function

Register	Operation
TSG3nOPT0.TSG3nSOC	TSG3nSOC = 1
TSG3nOPT0.TSG3nSTE	TSG3nSTE = 0
TSG3nOPT1.TSG3nSPC2-TSG3nSPC0	Sets output patterns listed in the following **Table 25.103** and **Table 25.104**.
TSG3nOPT0.TSG3nIDC	Sets output pattern (electric current direction).

Table 25.103 Output Patterns by Software Output Control (TSG3nOPT0.TSG3nIDC = 0)

TSG3nOPT0.TSG3nSOC = 1, TSG3nSTE = 0, TSG3nIDC = 0

output Pin	TSG3nSTR1.TSG3nOPF2-TSG3nOPF0							
	101	100	110	010	011	001	000	111
TSG3nO1	ACT	ACT	ACT	INACT	INACT	INACT	INACT	ACT
TSG3nO2	INACT	INACT	INACT	ACT	ACT	ACT	ACT	INACT
TSG3nO3	INACT	INACT	ACT	ACT	ACT	INACT	INACT	ACT
TSG3nO4	ACT	ACT	INACT	INACT	INACT	ACT	ACT	INACT
TSG3nO5	ACT	INACT	INACT	INACT	ACT	ACT	INACT	ACT
TSG3nO6	INACT	ACT	ACT	ACT	INACT	INACT	ACT	INACT

Note: ACT: Indicates active level is output.
INACT: Indicates inactive level is output.

Table 25.104 Output Patterns by Software Output Control (TSG3nOPT0.TSG3nIDC = 1)

TSG3nOPT0.TSG3nSOC = 1, TSG3nSTE = 0, TSG3nIDC = 1

Output Pin	TSG3nSTR1.TSG3nOPF2-TSG3nOPF0							
	101	100	110	010	011	001	000	111
TSG3nO1	INACT	INACT	INACT	ACT	ACT	ACT	ACT	INACT
TSG3nO2	ACT	ACT	ACT	INACT	INACT	INACT	INACT	ACT
TSG3nO3	ACT	ACT	INACT	INACT	INACT	ACT	ACT	INACT
TSG3nO4	INACT	INACT	ACT	ACT	ACT	INACT	INACT	ACT
TSG3nO5	INACT	ACT	ACT	ACT	INACT	INACT	ACT	INACT
TSG3nO6	ACT	INACT	INACT	INACT	ACT	ACT	INACT	ACT

Note: ACT: Indicates active level is output.
INACT: Indicates inactive level is output.

Section 26 Timer Option (TAPA)

This section contains a generic description of the Timer Option (TAPA).

The first part of this section describes all RH850/P1x specific properties, such as the number of units, register base addresses, etc. The remainder of the section describes the functions and registers of the TAPA.

26.1 Features of RH850/P1x TAPA

26.1.1 Units

This microcontroller has the following number of units of TAPA.

Table 26.1 Units

Product	RH850/P1x
Number of units	4
Name	TAPAn (n = 0 to 3)

Table 26.2 Index

Index	Meaning
n	Throughout this section, the individual TAPA units are identified by the index “n” (n = 0 to 3), for example, TAPAnFLG for the TAPAn flag register.

26.1.2 Register Base Address

TAPA register addresses are given as offsets from the given base address. Each of the TAPAn base addresses <TAPAn_base> is listed in the following table.

Table 26.3 Register Base Address

Base Address Name	Base Address
<TAPA0_base>	$FFE9\ 0000_H$
<TAPA1_base>	$FFE9\ 1000_H$
<TAPA2_base>	$FFE9\ 2000_H$
<TAPA3_base>	$FFE9\ 3000_H$

26.1.3 Clock Supply

Clock supply by and to TAPA is listed in the following table.

Table 26.4 Clock Supply

Unit Name	Clock for the Unit	Supply Clock Name
TAPAn	PCLK	High-speed peripheral clock CLK_HSB

26.1.4 Interrupt Request

Interrupts or DMA/DTS triggers are not provided to the TAPA module.

26.1.5 Reset Resources

TAPA reset sources are listed in the following table. TAPA is initialized by these reset sources.

Table 26.5 Reset Sources

Unit Name	Reset Source
TAPAn	Any reset sources

26.1.6 Internal Signal

Internal signals of Timer Option are listed in the following table.

Table 26.6 TAPAn Internal Signals

TAPAn Signal	Function	Connected to
TAPA0		
TAPA0THASIN	Hi-Z control asynchronous input signal	PIC1 function
$\overline{\text{TAPA0THZOUT0}}$	Hi-Z control output signal 0 (U phase)	Hi-Z control of TAUD0 U phase output signals (TAUD0O10, TAUD0O11)
$\overline{\text{TAPA0THZOUT1}}$	Hi-Z control output signal 1 (V phase)	Hi-Z control of TAUD0 V phase output signals (TAUD0O12, TAUD0O13)
$\overline{\text{TAPA0THZOUT2}}$	Hi-Z control output signal 2 (W phase)	Hi-Z control of TAUD0 W phase output signals (TAUD0O14, TAUD0O15)
TAPA1		
TAPA1THASIN	Hi-Z control asynchronous input signal	PIC1 function
$\overline{\text{TAPA1THZOUT0}}$	Hi-Z control output signal 0 (U phase)	Hi-Z control of TAUD1 U phase output signals (TAUD1O10,TAUD1O11)
$\overline{\text{TAPA1THZOUT1}}$	Hi-Z control output signal 1 (V phase)	Hi-Z control of TAUD1 V phase output signals (TAUD1O12, TAUD1O13)
$\overline{\text{TAPA1THZOUT2}}$	Hi-Z control output signal 2 (W phase)	Hi-Z control of TAUD1 W phase output signals (TAUD1O14, TAUD1O15)
TAPA2		
TAPA2THASIN	Hi-Z control asynchronous input signal	PIC1 function
$\overline{\text{TAPA2THZOUT0}}$	Hi-Z control output signal 0	Hi-Z control of TSG30 output signals (TSG30O1-TSG30O6)
TAPA3		
TAPA3THASIN	Hi-Z control asynchronous input signal	PIC1 function
$\overline{\text{TAPA3THZOUT0}}$	Hi-Z control output signal 0	Hi-Z control of TSG31 output signals (TSG31O1-TSG31O6)

26.1.7 Peripheral Configuration

The following figure shows peripheral configuration of TAPA.

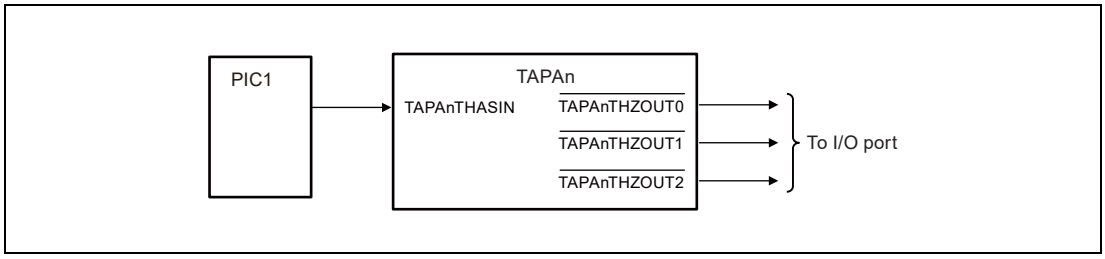

Figure 26.1 Peripheral Configuration of TAPA

The following describes peripheral configuration of TAPA.

- TAPAnTHASIN: Hi-Z control asynchronous input signal

  This signal controls Hi-Z control by the source selected in PIC1.

  For the sources selected in PIC1, see **Section 29.2.3.12, Hi-Z Control Function**.

26.2 Overview

26.2.1 Functional Overview

- Asynchronous Hi-Z control of each of the TAUD and TSG3 outputs via the asynchronous Hi-Z control input signal (TAPAnTHASIN)

26.2.2 Block Diagram

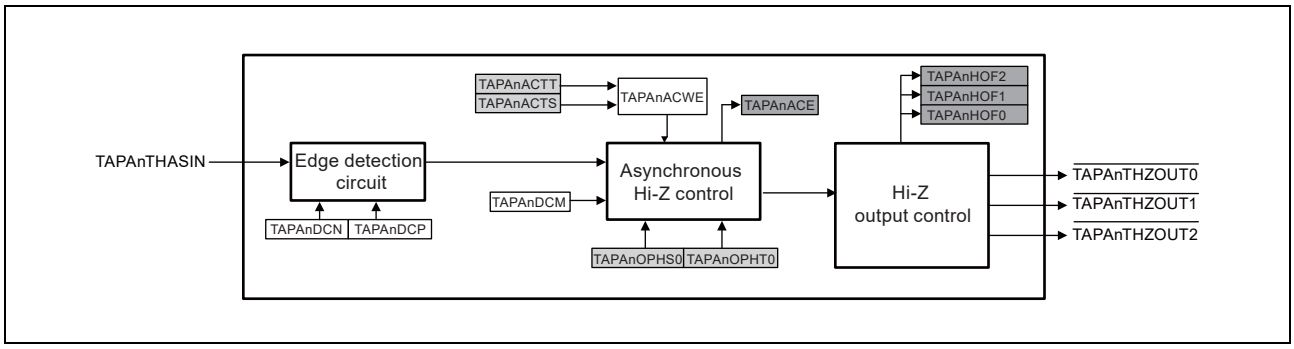

Figure 26.2 Block Diagram

26.3 Registers

26.3.1 List of Registers

TAPAn (n = 0 to 3) registers are listed in the following table.

<TAPAn_base> is defined in **Section 26.1.2, Register Base Address**.

Module	Register Name	Symbol	Address
TAPAn	TAPAn control register 0	TAPAnCTL0	<TAPAn_base> + 20_H
TAPAn	TAPAn flag register	TAPAnFLG	<TAPAn_base> + 00_H
TAPAn	TAPAn asynchronous control write enable register	TAPAnACWE	<TAPAn_base> + 04_H
TAPAn	TAPAn asynchronous control start trigger register	TAPAnACTS	<TAPAn_base> + 08_H
TAPAn	TAPAn asynchronous control stop trigger register	TAPAnACTT	<TAPAn_base> + $0C_H$
TAPAn	TAPAn Hi-Z start trigger register	TAPAnOPHS	<TAPAn_base> + 14_H
TAPAn	TAPAn Hi-Z stop trigger register	TAPAnOPHT	<TAPAn_base> + 18_H

26.3.2 TAPAnCTL0 — TAPAn Control Register 0

Control register 0 is used to control Hi-Z.

A value in this register can only be rewritten in the following conditions.

- TAPAnFLG.TAPAnACE = 0 while TAPAn (n = 0, 1) and TAUDnTEm = 0 (m = 10 to 15) at the corresponding TAUDn master channel.
- TAPAnFLG.TAPAnACE = 0 while TAPAn (n = 2, 3).

Access This register can be read/written in 16-bit units.

Address <TAPAn_base> + 20_H

Value after reset 0000_H

Bit	15	14	13	12	11	10	9	8	7	6	5	4	3	2	1	0
	—	—	—	—	—	—	—	—	—	—	—	TAPAnDCM	TAPAnDCN	TAPAnDCP	—	—
Value after reset	0	0	0	0	0	0	0	0	0	0	0	0	0	0	0	0
R/W	R	R	R	R	R	R	R	R	R	R	R	R/W	R/W	R/W	R	R

Table 26.7 TAPAnCTL0 Register Contents

Bit Position	Bit Name	Function
15 to 5	Reserved	When read, the value after reset is read. When writing, write the value after reset.
4	TAPAnDCM	Clearing Condition Specification This control bit specifies the condition for clearing of the Hi-Z control outputs. 0: Manipulation of TAPAnOPHT0 is enabled regardless of the TAPAnTHASIN signal input level. 1: Manipulation of TAPAnOPHT0 is disabled when the TAPAnTHASIN input signal is at the active level. Manipulation of TAPAnOPHT0 is enabled when the TAPAnTHASIN signal input is inactive.
3, 2	TAPAnDCN, TAPAnDCP	Hi-Z Input Edge Selection These control bits specify the valid edge of TAPAnTHASIN.

TAPAn DCN	TAPAn DCP	Description
0	0	Does not detect valid edges
0	1	Detects a rising edge as the valid edge (active level = high)
1	0	Detects a falling edge as the valid edge (active level = low)
1	1	Setting is prohibited.

1, 0	Reserved	When read, the value after reset is read. When writing, write the value after reset.

26.3.3 TAPAnFLG — TAPAn Flag Register

This flag register is used to control Hi-Z.

Access This register can only be read in 16-bit units.

Address <TAPAn_base> + 00_H

Value after reset 0000_H

Bit	15	14	13	12	11	10	9	8	7	6	5	4	3	2	1	0
	—	—	—	—	—	TAPAnHOF2	TAPAnHOF1	TAPAnHOF0	—	—	—	—	—	—	—	TAPAnACE
Value after reset	0	0	0	0	0	0	0	0	0	0	0	0	0	0	0	0
R/W	R	R	R	R	R	R	R	R	R	R	R	R	R	R	R	R

Table 26.8 TAPAnFLG Register Contents

Bit Position	Bit Name	Function
15 to 11	Reserved	When read, the value after reset is read.
10 to 8	TAPAnHOFm	HZOUTm output monitor bit (m = 0 to 2) This bit monitors the $\overline{\text{TAPAnTHZOUTm}}$ output. 0: The $\overline{\text{TAPAnTHZOUTm}}$ output is at the high level. 1: The $\overline{\text{TAPAnTHZOUTm}}$ output is at the low level.*1
7 to 1	Reserved	When read, the value after reset is read.
0	TAPAnACE	Asynchronous Hi-Z Control Enable This bit indicates the state of asynchronous Hi-Z control (TAPAnTHASIN). 0: Asynchronous Hi-Z control is stopped. 1: Asynchronous Hi-Z control is enabled. The conditions for setting and clearing this bit are as follows. Clearing condition: Writing 1 to TAPAnACTT while TAPAnACWE = 1. Setting condition: Writing 1 to TAPAnACTS while TAPAnACWE = 1.

Note 1. TAPAnHOFm (m = 1, 2) is enabled when TAPAn (n = 0, 1).

26.3.4 TAPAnACWE — TAPAn Asynchronous Control Write Enable Register

This register enables writing for asynchronous Hi-Z control.

Access This register can be read/written in 8-bit units.

Address <TAPAn_base> + 04_H

Value after reset 00_H

Bit	7	6	5	4	3	2	1	0
	—	—	—	—	—	—	—	TAPAnACWE
Value after reset	0	0	0	0	0	0	0	0
R/W	R	R	R	R	R	R	R	R/W

Table 26.9 TAPAnACWE Register Contents

Bit Position	Bit Name	Function
7 to 1	Reserved	When read, the value after reset is read. When writing, write the value after reset.
0	TAPAnACWE	Asynchronous Control Write Enable This is a write-enable bit for asynchronous Hi-Z control. After 1 has been written to this bit, it is automatically cleared to 0 by writing 1 to TAPAnACTS or TAPAnACTT. 0: Disables writing to TAPAnACTS and TAPAnACTT. 1: Enables writing to TAPAnACTS and TAPAnACTT.

26.3.5 TAPAnACTS — TAPAn Asynchronous Control Start Trigger Register

This register enables the start trigger for asynchronous Hi-Z control.

Access This register can only be written in 8-bit units. This register is always read as 00_H.

Address <TAPAn_base> + 08_H

Value after reset 00_H

Bit	7	6	5	4	3	2	1	0
	—	—	—	—	—	—	—	TAPAnACTS
Value after reset	0	0	0	0	0	0	0	0
R/W	R	R	R	R	R	R	R	W

Table 26.10 TAPAnACTS Register Contents

Bit Position	Bit Name	Function
7 to 1	Reserved	When writing, write the value after reset.
0	TAPAnACTS	Asynchronous Control Start Trigger This bit enables the start trigger for asynchronous Hi-Z control. The setting of this bit is only valid when TAPAnACWE = 1. 0: Writing 0 to this bit is ignored (no function). 1: Enables asynchronous Hi-Z control if TAPAnACWE = 1.

26.3.6 TAPAnACTT — TAPAn Asynchronous Control Stop Trigger Register

This register enables the stop trigger for asynchronous Hi-Z control.

Access This register can only be written in 8-bit units. This register is always read as 00_H.

Address <TAPAn_base> + $0C_H$

Value after reset 00_H

Bit	7	6	5	4	3	2	1	0
	—	—	—	—	—	—	—	TAPAnACTT
Value after reset	0	0	0	0	0	0	0	0
R/W	R	R	R	R	R	R	R	W

Table 26.11 TAPAnACTT Register Contents

Bit Position	Bit Name	Function
7 to 1	Reserved	When writing, write the value after reset.
0	TAPAnACTT	Asynchronous Control Stop Trigger This bit enables the stop trigger for asynchronous Hi-Z control. The setting of this bit is only valid when TAPAnACWE = 1. 0: Writing 0 to this bit is ignored (no function). 1: Stops asynchronous Hi-Z control if TAPAnACWE = 1.

26.3.7 TAPAnOPHS — TAPAn Hi-Z Start Trigger Register

This register sets the start trigger for a Hi-Z control signal ($\overline{\text{TAPAnTHZOUTm}}$) (m = 0 to 2*1)

Note 1. TAPAn (n = 2, 3) are not available when m = 1, 2.

Access This register can only be written in 8-bit units. This register is always read as 00_H.

Address <TAPAn_base> + 14_H

Value after reset 00_H

Bit	7	6	5	4	3	2	1	0
	—	—	—	—	—	—	—	TAPAnOPHS0
Value after reset	0	0	0	0	0	0	0	0
R/W	R	R	R	R	R	R	R	W

Table 26.12 TAPAnOPHS Register Contents

Bit Position	Bit Name	Function
7 to 1	Reserved	When writing, write the value after reset.
0	TAPAnOPHS0	Hi-Z Control Signal Start Trigger 0 This bit sets the start trigger for a Hi-Z control signal. 0: The read value is always 0 and writing 0 to this bit is ignored. 1: Sets the Hi-Z control signal ($\overline{\text{TAPAnTHZOUTm}}$) (m = 0 to 2*1) to the low level.

26.3.8 TAPAnOPHT — TAPAn Hi-Z Stop Trigger Register

This register sets the stop trigger for a Hi-Z signal ($\overline{\text{TAPAnTHZOUTm}}$) (m = 0 to 2*1)

Note 1. TAPAn (n = 2, 3) are not available when m = 1, 2.

Access This register can only be written in 8-bit units. This register is always read as 00_H.

Address <TAPAn_base> + 18_H

Value after reset 00_H

Bit	7	6	5	4	3	2	1	0
	—	—	—	—	—	—	—	TAPAnOPHT0
Value after reset	0	0	0	0	0	0	0	0
R/W	R	R	R	R	R	R	R	W

Table 26.13 TAPAnOPHT Register Contents

Bit Position	Bit Name	Function
7 to 1	Reserved	When writing, write the value after reset.
0	TAPAnOPHT0	Hi-Z Control Signal Stop Trigger 0 Sets the stop trigger for a Hi-Z control signal. 0: The read value is always 0 and writing 0 to this bit is ignored. 1: Sets Hi-Z control signal ($\overline{\text{TAPAnTHZOUTm}}$) (m = 0 to 2*1) to the high level.

26.4 Function

26.4.1 Asynchronous Hi-Z Control Function

Abnormal operation in timer motor-control under CPU control leads to rotation of the externally connected motor also becoming abnormal. In such cases, this function forcibly sets the motor control output to the Hi-Z state, independently of control by the CPU.

26.4.1.1 Overview

The following method is available for controlling Hi-Z.

- Asynchronous input Hi-Z control by Hi-Z control asynchronous input signal (TAPAnTHASIN)
  - Controls the Hi-Z control output signals $\overline{\text{TAPAnTHZOUT0}}$ (phase U), $\overline{\text{TAPAnTHZOUT1}}$ (V phase), $\overline{\text{TAPAnTHZOUT2}}$ (W phase) asynchronously at TAPAn (n = 0, 1).
  - Controls the Hi-Z control output signals $\overline{\text{TAPAnTHZOUT0}}$ asynchronously at TAPAn (n = 2, 3).

Asynchronous Hi-Z Control and Its Operation

Function	Operation
Asynchronous Hi-Z control corresponding to the pin input	This function detects asynchronous pin inputs and forcibly stops TOUTn output from the corresponding timer module (TAUD, TSG3) in response. Device outputs become Hi-Z while TAPAnTHASIN is active and until software sends a stop request.

26.4.1.2 Example of System Configuration

When an external error detection signal is received, an interrupt is generated and, at the same time, the motor-driving signal output is set to the Hi-Z state.

This module assumes that microcontroller operation may hang when an error occurs. To handle such situations, external error detection signals are continuously processed so that the motor-driving signal can be set to the Hi-Z state even if no clock signal is being supplied.

This module only detects an error when the edge of the error-detection signal is detected. A fixed output level is not detected as an error (the signal has no edge.)

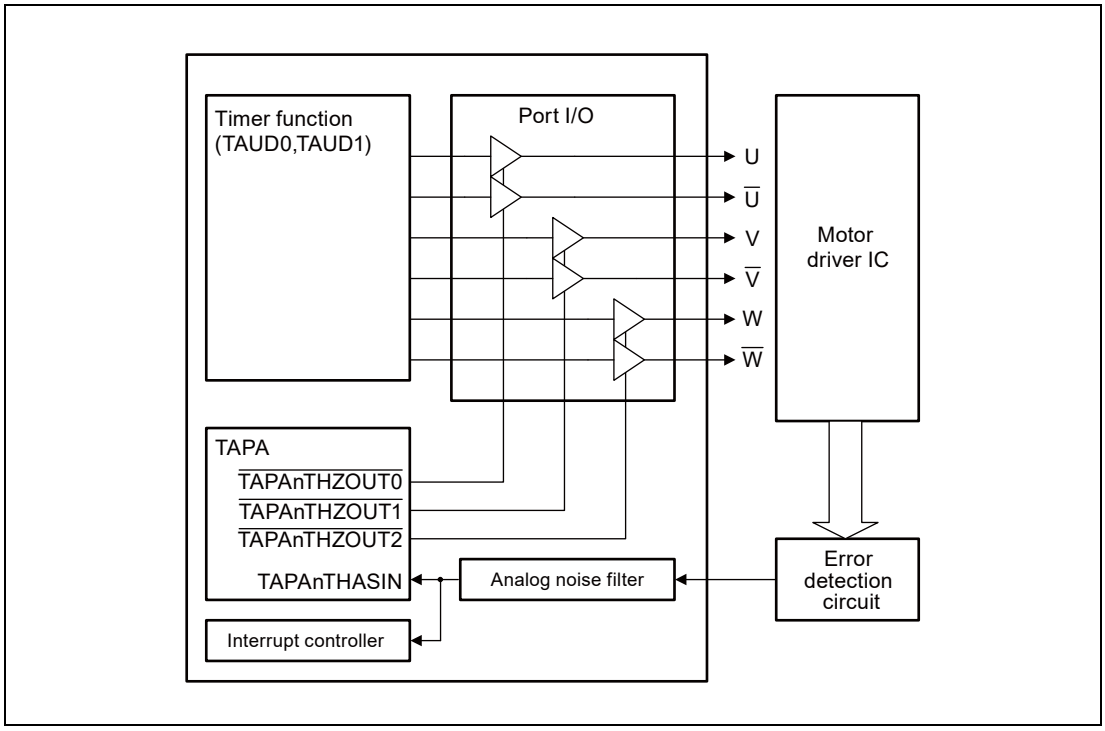

Table 26.14 Example of System Configuration of Asynchronous Hi-Z Control for Pin Inputs (TAUD0, TAUD1)

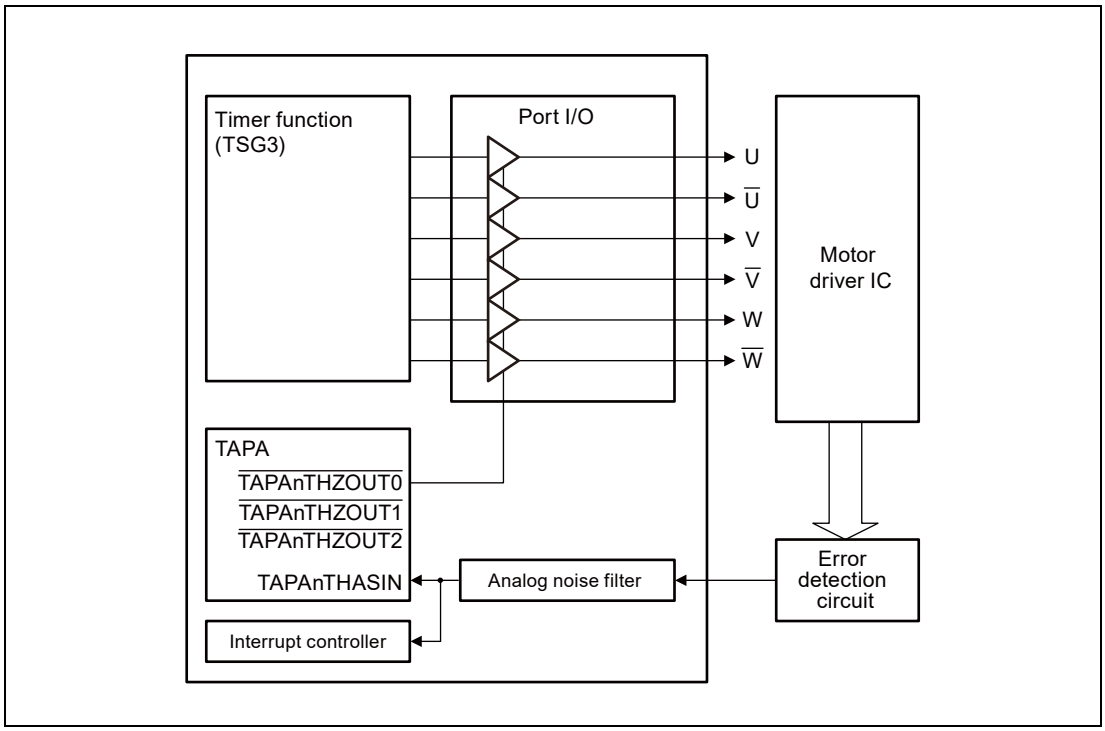

Table 26.15 Example of System Configuration of Asynchronous Hi-Z Control for Pin Inputs (TSG30, TSG31)

26.4.1.3 Basic Operation

Setting examples are described as follows.

When TAPAnCTL0.TAPAnDCM = 0, TAPAnDCP = 1, and TAPAnDCN = 0

$\overline{\text{TAPAnTHZOUT0}}$ goes to the low level on detection of a valid edge of the asynchronous input (TAPAnTHASIN).

Output is forcibly stopped (by port control for Hi-Z output) as long as the $\overline{\text{TAPAnTHZOUT0}}$ output is at the low level.

$\overline{\text{TAPAnTHZOUT0}}$ goes to the high level in response to writing 1 to the bit 0 of TAPAn Hi-Z stop trigger (TAPAnOPHT0), regardless of the level of TAPAnTHASIN.

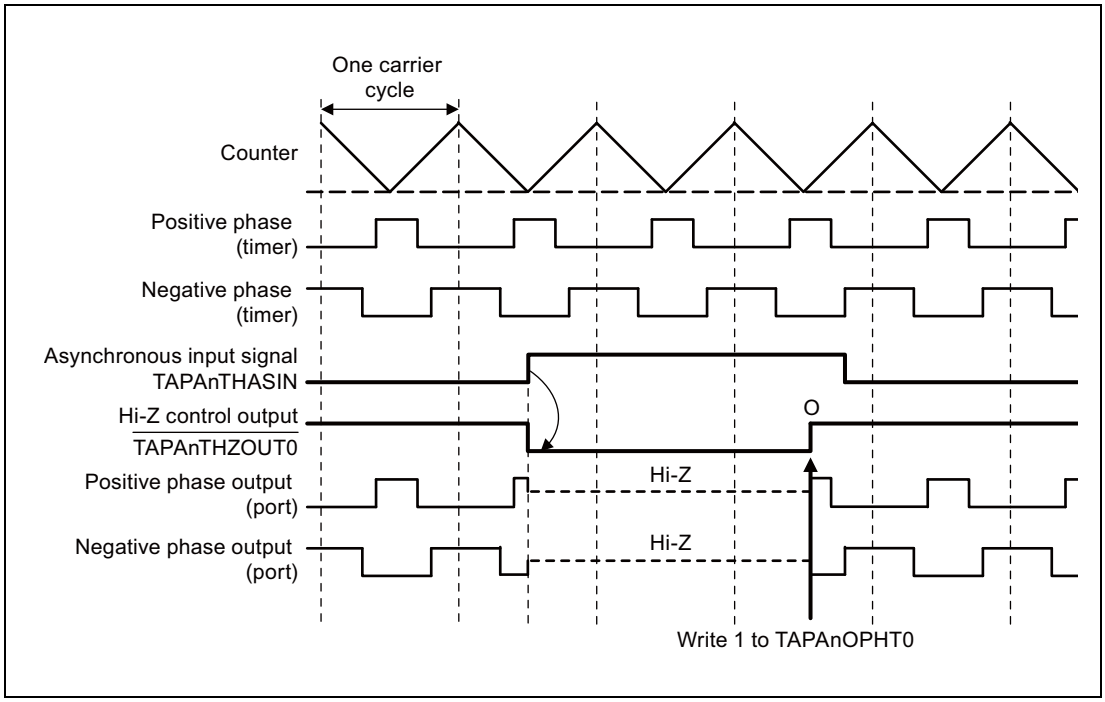

Figure 26.3 $\overline{\text{TAPAnTHZOUT0}}$ Operation when TAPAnDCM = 0, TAPAnDCP = 1, and TAPAnDCN = 0

When TAPAnCTL0.TAPAnDCM = 1, TAPAnDCP = 1, and TAPAnDCN = 0

$\overline{\text{TAPAnTHZOUT0}}$ goes to the low level in response to detection of a valid edge of the asynchronous input signal (TAPAnTHASIN).

Output is forcibly stopped (by port control for Hi-Z output) as long as the $\overline{\text{TAPAnTHZOUT0}}$ output is at the low level.

Writing of 1 to Hi-Z stop trigger 0 (TAPAnOPHT0) is ignored as long as the asynchronous input signal (TAPAnTHASIN) is at the active level (high because TAPAnDCP = 1).

After the asynchronous input signal (TAPAnTHASIN) is switched to the inactive level (low because TAPAnDCP = 1), $\overline{\text{TAPAnTHZOUT0}}$ goes to the high level when 1 is written to Hi-Z stop trigger 0 (TAPAnOPHT0).

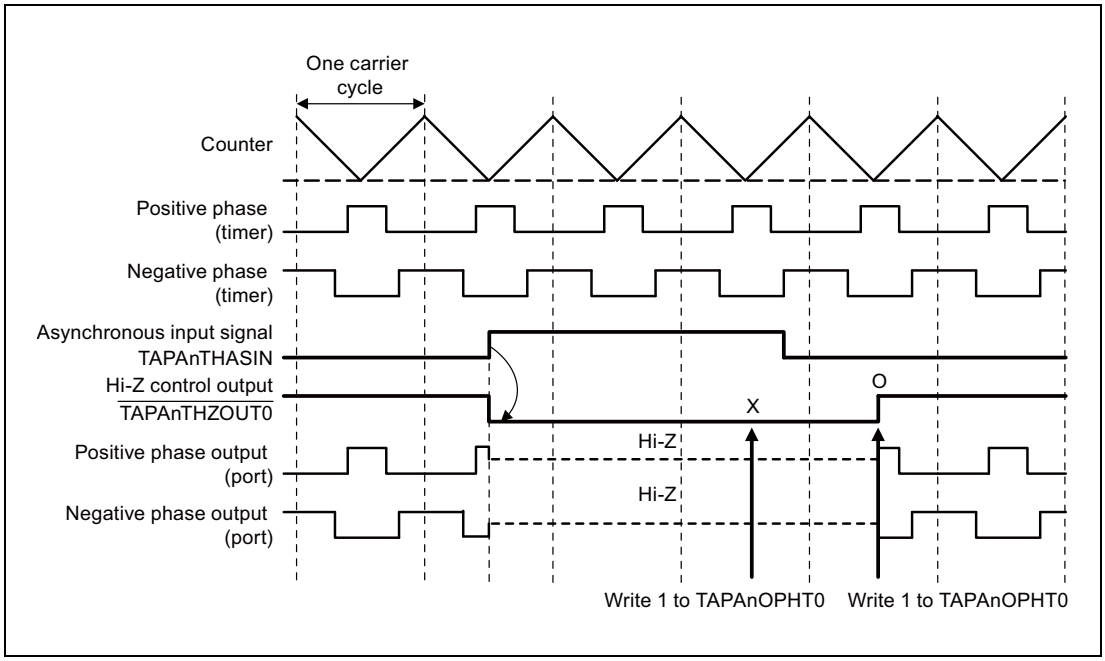

Figure 26.4 $\overline{\text{TAPAnTHZOUT0}}$ Operation when TAPAnDCM = 1, TAPAnDCP = 1, and TAPAnDCN = 0

26.4.1.4 Software Operations for Asynchronous Hi-Z Control

This module allows software control of the output of Hi-Z control signals.
Hi-Z start trigger 0 (TAPAnOPHS0) and Hi-Z stop trigger 0 (TAPAnOPHT0) are used to control $\overline{\text{TAPAnTHZOUT0}}$, $\overline{\text{TAPAnTHZOUT1}}$*1, and $\overline{\text{TAPAnTHZOUT2}}$*1.

Note 1. Not available when TAPAn (n = 2, 3).

Operation of the Hi-Z Start Trigger (TAPAnOPHS)

TAPAnDCM	Operation
0/1	Writing 1 to the TAPAnOPHS0 bit places the $\overline{\text{TAPAnTHZOUT0}}$, $\overline{\text{TAPAnTHZOUT1}}$, and $\overline{\text{TAPAnTHZOUT2}}$ at the low level.

Operation of the Hi-Z Stop Trigger (TAPAnOPHT) during Hi-Z Control in Response to Asynchronous Input

The Hi-Z stop trigger is enabled in the following conditions.

TAPAnDCM	Operation
0	Writing 1 to the TAPAnOPHT0 bit places the $\overline{\text{TAPAnTHZOUT0}}$, $\overline{\text{TAPAnTHZOUT1}}$, and $\overline{\text{TAPAnTHZOUT2}}$ at the high level.
1	If TAPAnTHASIN is at the inactive level, writing 1 to the TAPAnOPHT0 bit places the $\overline{\text{TAPAnTHZOUT0}}$, $\overline{\text{TAPAnTHZOUT1}}$, and $\overline{\text{TAPAnTHZOUT2}}$ at the high level. If TAPAnTHASIN is at the active level, writing of 1 to the TAPAnOPHT0 bit is ignored.

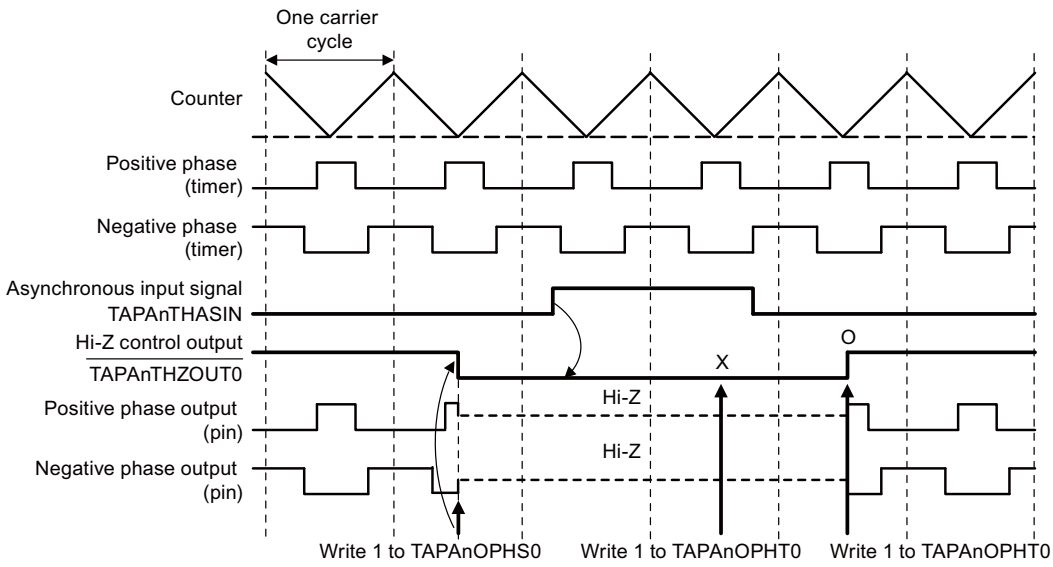

Figure 26.5 $\overline{\text{TAPAnTHZOUT0}}$ Operation TAPAnDCM = 1, TAPAnDCP = 1, and TAPAnDCN = 0

26.4.1.5 Operating Procedure

An example of the operating procedure for Hi-Z control in response to asynchronous input is as follows (the table only covers settings for the timer option module because this operation does not depend on timer operations).

	Operation	State of TAPA
Initial settings	Setting in the TAPAnCTL0 register. Set TAPAnDCP and TAPAnDCN (input edge selection). Set TAPAnDCM (clearing mode selection).	Hi-Z control in response to asynchronous input is stopped (TAPAnFLG.TAPAnACE = 0).
Starting operation	Setting in the TAPAnACWE register: Set the TAPAnACWE bit to 1. Setting in the TAPAnACTS register: Set the TAPAnACTS bit to 1.	Writing to TAPAnACTS is enabled. TAPAnFLG.TAPAnACE = 1, enabling Hi-Z control in response to asynchronous input.
During operation	To start Hi-Z control of an output from the timer: – Controlled by the TAPAnOPHS0 in TAPA. – Controlled by the Hi-Z control asynchronous input signal (TAPAnTHASIN). To stop Hi-Z control of output from the timer: – Controlled by the TAPAnOPHT0 in TAPA. (TAPAnDCM = 0) – Controlled by the TAPAnOPHT0 when Hi-Z input signal in TAPA (TAPAnTHASIN) is inactive level. The state of TAPA operations can be read from the TAPAnFLG register at all times.	On detection of input of the starting edge of the Hi-Z input signal (TAPAnTHASIN) or setting of the start trigger bit (TAPAnOPHS0 = 1), the Hi-Z controller switches the TAPAnTHZOUT0, TAPAnTHZOUT1*1, and TAPAnTHZOUT2*1 pins to low-level output. In accord with the operating mode settings in TAPAnDCM, the Hi-Z controller switches the TAPAnTHZOUT0, TAPAnTHZOUT1*1, and TAPAnTHZOUT2*1 pins to high-level outputs in response to setting of the stop trigger bit (TAPAnOPHT0 = 1).
Stopping operation	Setting in the TAPAnACWE register: Set the TAPAnACWE bit to 1. Setting in the TAPAnACTT register. Set the TAPAnACTT bit to 1.	Writing to TAPAnACTT is enabled. TAPAnFLG.TAPAnACE = 0, stopping asynchronous Hi-Z control Hi-Z control

Restart operation

Note 1. Not available when TAPAn (n = 2, 3).

Section 27 Timer Pattern Buffer (TPBA)

This section contains a generic description of the Timer Pattern Buffer (TPBA).

The first part of this section describes all RH850/P1x specific properties, such as the number of units, register base addresses, etc. The remainder of the section describes the functions and registers of TPBA.

27.1 Features of RH850/P1x TPBA

27.1.1 Units and Channels

This LSI has the following number of TPBA units.

Each TPBA unit has one channel interface.

Table 27.1 Number of Units

Product Name	RH850/P1x 100 pins	RH850/P1x 144 pins
Number of units	2	2
Name	TPBAn (n = 0, 1)	TPBAn (n = 0, 1)

Table 27.2 Index

Index	Meaning
n	Throughout this section, the individual TPBA units are identified by the index “n” (n = 0, 1); for example, TPBAnCTL is the TPBAn control register.
m	The number of buffers are indicated by the index “m” (m = 00 to 63).

27.1.2 Register Base Address

TPBA base addresses are listed in the following table.

TPBA register addresses are given as offsets from the base addresses in general.

Table 27.3 Register Base Address

Base Address Name	Base Address
<TPBA0_base>	FFEA 0000_H
<TPBA1_base>	FFEA 1000_H

27.1.3 Clock Supply

Clock supply by and to TPBA is listed in the following table.

Table 27.4 Clock Supply

Unit Name	Clock for the Unit	Supply Clock Name
TPBAn	PCLK	High-speed peripheral clock CLK_HSB

27.1.4 Interrupt Request

TPBA interrupt requests are listed in the following table.

Table 27.5 Interrupt Requests

Unit Interrupt Signal	Outline	Interrupt Number	DMA/DTS Trigger Number
TPBA0			
INTTPBA0IPRD	TPBA0 Period match detection interrupt	286	111
INTTPBA0IDTY	TPBA0 Duty match detection interrupt	287	112
INTTPBA0IPAT	TPBA0 Pattern number matching detection interrupt	288	113
TPBA1			
INTTPBA1IPRD	TPBA1 Period match detection interrupt	289	114
INTTPBA1IDTY	TPBA1 Duty match detection interrupt	290	115
INTTPBA1IPAT	TPBA1 Pattern number matching detection interrupt	291	116

27.1.5 Reset Sources

TPBA reset sources are listed in the following table.

Table 27.6 Reset Sources

Unit Name	Reset Source
TPBAn	All reset sources

27.1.6 External Input/Output Signals

External input/output signals of TPBA are listed in the following table.

Table 27.7 External Input/Output Signals

Unit Signal Name	Outline	Alternative Port Pin Signal
TPBA0		
TPBA0O	Timer output	TPBA0O
TPBA1		
TPBA1O	Timer output	TPBA1O

27.2 Overview

27.2.1 Functional Overview

TPBAn is a 16-bit PWM timer with the duty setting buffer.

- Count clock resolution: Minimum 12.5 ns (count clock: 80 MHz)
- 16-bit counter
- 16-bit duty register
- 16-bit period setting register
- 7-bit address counter register
- 7-bit pattern number setting register
- Interrupt request signals
  - Period-matched detection interrupt
  - Duty-cycle-matched detection interrupt
  - Number-of-patterns matched detection interrupt
- Number of duty patterns
  - 64 patterns (16 bits) or 128 patterns (8 bits)
- Automatic duty generation according to the number of patterns
- Output control by software
- The count clock can be selected from PCLK, PCLK/2, PCLK/4, and PCLK/8 according to the prescaler set value.
- Synchronous start with another timer

27.2.2 Block Diagram

The following block diagram shows the main components of TPBA.

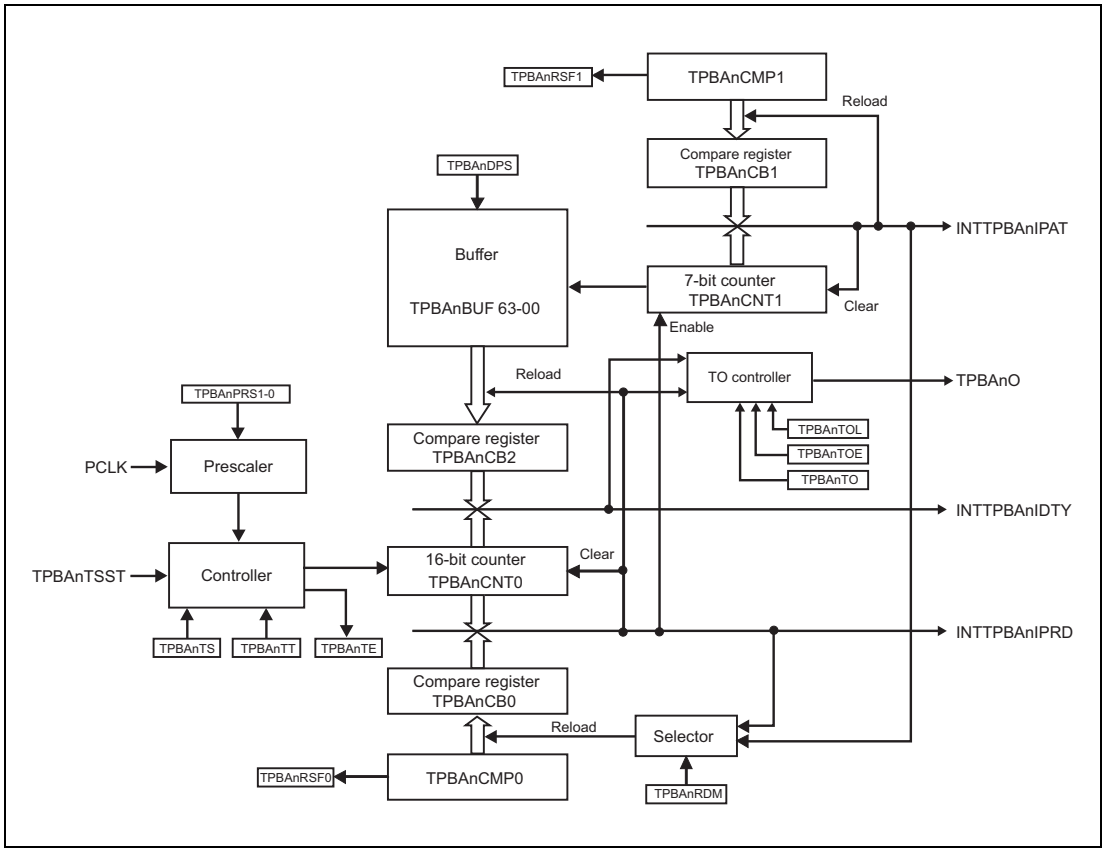

Figure 27.1 Block Diagram of TPBA

- TPBAnTSST: Simultaneous start trigger (input by PIC function)

27.3 Registers

27.3.1 TPBAn Registers Overview

TPBA registers are listed in the following table.

For information on <TPBAn_base>, see **Section 27.1.2, Register Base Address**.

Table 27.8 List of Registers

Module Name	Register Name	Symbol	Address
TPBAn	TPBAn control register	TPBAnCTL	<TPBAn_base> + 200_H
TPBAn	TPBAn reload data mode register	TPBAnRDM	<TPBAn_base> + 118_H
TPBAn	TPBAn reload status register	TPBAnRSF	<TPBAn_base> + 110_H
TPBAn	TPBAn reload data trigger register	TPBAnRDT	<TPBAn_base> + 114_H
TPBAn	TPBAn timer output enable register	TPBAnTOE	<TPBAn_base> + 120_H
TPBAn	TPBAn timer output register	TPBAnTO	<TPBAn_base> + $11C_H$
TPBAn	TPBAn timer output level register	TPBAnTOL	<TPBAn_base> + 124_H
TPBAn	TPBAn period setting register	TPBAnCMP0	<TPBAn_base> + 100_H
TPBAn	TPBAn duty setting register	TPBAnBUFm	<TPBAn_base> + m × 4_H
TPBAn	TPBAn pattern number setting register	TPBAnCMP1	<TPBAn_base> + 104_H
TPBAn	TPBAn timer counter register	TPBAnCNT0	<TPBAn_base> + 108_H
TPBAn	TPBAn address counter register	TPBAnCNT1	<TPBAn_base> + $10C_H$
TPBAn	TPBAn enable status register	TPBAnTE	<TPBAn_base> + 128_H
TPBAn	TPBAn start trigger register	TPBAnTS	<TPBAn_base> + $12C_H$
TPBAn	TPBAn stop trigger register	TPBAnTT	<TPBAn_base> + 130_H

27.3.2 TPBAnCTL — TPBAn Control Register

This register specifies the operation of the TPBAn.

Access: This register can be read/written in 8-bit units.

Address: <TPBAn_base> + 200_H

Value after reset: 00_H

Bit	7	6	5	4	3	2	1	0
	—	—	TPBAnPRS[1:0]		—	—	—	TPBAnDPS
Value after reset	0	0	0	0	0	0	0	0
R/W	R	R	R/W	R/W	R	R	R	R/W

Table 27.9 TPBAnCTL Register Contents

Bit Position	Bit Name	Function
7, 6	Reserved	When read, the value after reset is read. When writing, write the value after reset.
5, 4	TPBAnPRS [1:0]	Selects the count clock. TPBAnPRS1 / TPBAnPRS0 / Description 0 / 0 / PCLK is selected. 0 / 1 / PCLK/2 is selected. 1 / 0 / PCLK/4 is selected. 1 / 1 / PCLK/8 is selected.
3 to 1	Reserved	When read, the value after reset is read. When writing, write the value after reset.
0	TPBAnDPS	Selects the duty setting pattern mode. 0: 16 bits × 64 patterns mode 1: 8 bits × 128 patterns mode

CAUTION

This register should be set when the timer is stopped (TPBAnTE = 0). If this register is erroneously rewritten, set the register again after stopping the timer.

27.3.3 TPBAnRDM — TPBAn Reload Data Mode Register

This register controls the reload timing of the TPBAn period setting register and TPBAn timer output level register values.

Access: This register can be read/written in 8-bit units.

Address: <TPBAn_base> + 118_H

Value after reset: 00_H

Bit	7	6	5	4	3	2	1	0
	—	—	—	—	—	—	—	TPBAnRDM0
Value after reset	0	0	0	0	0	0	0	0
R/W	R	R	R	R	R	R	R	R/W

Table 27.10 TPBAnRDM Register Contents

Bit Position	Bit Name	Function
7 to 1	Reserved	When read, the value after reset is read. When writing, write the value after reset.
0	TPBAnRDM0	Controls the reload timing of the TPBAn period setting register (TPBAnCMP0) and TPBAn timer output level register (TPBAnTOL) values. 0: Reloads the values synchronously with a number-of-patterns matched detection interrupt (INTTPBAnIPAT). 1: Reloads the values synchronously with a period-matched detection interrupt (INTTPBAnIPRD).

CAUTION

Although this register can be rewritten during operation, the rewritten value is reflected at any time. Accordingly, during operation, this register should be rewritten when the reload request flag (TPBAnRSF) is 0.

27.3.4 TPBAnRSF — TPBAn Reload Status Register

This register indicates whether or not reload requests from the corresponding registers have been generated.

Access: This register can be read in 8-bit units.

Address: <TPBAn_base> + 110_H

Value after reset: 00_H

Bit	7	6	5	4	3	2	1	0
	—	—	—	—	—	—	TPBAnRSF1	TPBAnRSF0
Value after reset	0	0	0	0	0	0	0	0
R/W	R	R	R	R	R	R	R	R

Table 27.11 TPBAnRSF Register Contents

Bit Position	Bit Name	Function
7 to 2	Reserved	When read, the value after reset is read.
1	TPBAnRSF1	Indicates whether or not a reload request from TPBAnCMP1 has been generated. 0: No reload request generated or reload completed. 1: Reload request has been generated. This bit is set to 1 when 1 is written to the TPBAnRDT1 bit in the TPBAnRDT register. This bit is cleared at the timing when reload is performed.
0	TPBAnRSF0	Indicates whether or not a reload request from TPBAnCMP0 and TPBAnTOL has been generated. 0: No reload request generated or reload completed. 1: Reload request has been generated. This bit is set to 1 when 1 is written to the TPBAnRDT0 bit in the TPBAnRDT register. This bit is cleared at the timing when reload is performed.

27.3.5 TPBAnRDT — TPBAn Reload Data Trigger Register

This register enables reload of the register values.

Access: This register can be written in 8-bit units. It is always read as 0.

Address: <TPBAn_base> + 114_H

Value after reset: 00_H

Bit	7	6	5	4	3	2	1	0
	—	—	—	—	—	—	TPBAnRDT1	TPBAnRDT0
Value after reset	0	0	0	0	0	0	0	0
R/W	R	R	R	R	R	R	W	W

Table 27.12 TPBAnRDT Register Contents

Bit Position	Bit Name	Function
7 to 2	Reserved	When writing, write the value after reset.
1	TPBAnRDT1	Enables reload of the TPBAnCMP1 values. 0: Write access is ignored. 1: Reload is enabled (TPBAnRSF1 is set to 1). The values are updated simultaneously at the next reload timing (reload).
0	TPBAnRDT0	Enables reload of the TPBAnCMP0 and TPBAnTOL values. 0: Write access is ignored. 1: Reload is enabled (TPBAnRSF0 is set to 1). The values are updated simultaneously at the next reload timing (reload).

27.3.6 TPBAnTOE — TPBAn Timer Output Enable Register

This register enables or disables the timer output.

Access: This register can be read/written in 8-bit units.

Address: <TPBAn_base> + 120_H

Value after reset: 00_H

Bit	7	6	5	4	3	2	1	0
	—	—	—	—	—	—	—	TPBAnTOE0
Value after reset	0	0	0	0	0	0	0	0
R/W	R	R	R	R	R	R	R	R/W

Table 27.13 TPBAnTOE Register Contents

Bit Position	Bit Name	Function
7 to 1	Reserved	When read, the value after reset is read. When writing, write the value after reset.
0	TPBAnTOE0	Enables or disables the timer output (TPBAnO). 0: Disables the timer output based on counter operation. 1: Enables the timer output based on counter operation. • When the timer output is disabled, the level specified in TPBAnTO is output from the TPBAnO pin, and can be controlled by software. • When the timer output is enabled, TPBAnTO is set or cleared by the timer operation, and a PWM signal is output. Write access is prohibited (ignored).

27.3.7 TPBAnTO — TPBAn Timer Output Register

This register controls or reads timer output level.

Access: This register can be read/written in 8-bit units.

Address: <TPBAn_base> + $11C_H$

Value after reset: 00_H

Bit	7	6	5	4	3	2	1	0
	—	—	—	—	—	—	—	TPBAnTO0
Value after reset	0	0	0	0	0	0	0	0
R/W	R	R	R	R	R	R	R	R/W

Table 27.14 TPBAnTO Register Contents

Bit Position	Bit Name	Function
7 to 1	Reserved	When read, the value after reset is read. When writing, write the value after reset.
0	TPBAnTO0	Sets or indicates the output level of TPBAnO pin • When the timer output is disabled (TPBAnTOE.TPBAnTOE0 = 0) 0: Outputs low level. 1: Outputs high level. The output level can be controlled by rewriting this register during stopping of the timer output. • When the timer output is enabled (TPBAnTOE.TPBAnTOE0 = 1) 0: Low level is being output by the timer output. 1: High level is being output by the timer output. When the timer output is enabled, rewrite to this register is ignored.

27.3.8 TPBAnTOL — TPBAn Timer Output Level Register

This register controls the timer output level.

Access: This register can be read/written in 8-bit units.

Address: <TPBAn_base> + 124_H

Value after reset: 00_H

Bit	7	6	5	4	3	2	1	0
	—	—	—	—	—	—	—	TPBAnTOL0
Value after reset	0	0	0	0	0	0	0	0
R/W	R	R	R	R	R	R	R	R/W

Table 27.15 TPBAnTOL Register Contents

Bit Position	Bit Name	Function
7 to 1	Reserved	When read, the value after reset is read. When writing, write the value after reset.
0	TPBAnTOL0	Specifies the active level of the timer output. 0: High 1: Low. • Setting of this bit is enabled when the timer output is enabled (TPBAnTOE.TPBAnTOE0 = 1). • Setting of this bit is reflected when the timer output is started, and change of the output level is reflected at the next reload timing.

CAUTION

This register is a register to be reloaded. Rewrite during timer operation is reflected at the next reload timing. For details on reload, see **Section 27.4.2, Compare Register Rewrite Operation**.

27.3.9 TPBAnCMP0 — TPBAn Period Setting Register

This is a 16-bit compare register for setting the PWM period.

Access: This register can be read/written in 16-bit units.

Address: <TPBAn_base> + 100_H

Value after reset: 0000_H

Bit	15	14	13	12	11	10	9	8	7	6	5	4	3	2	1	0
	TPBAnCMP0															
Value after reset	0	0	0	0	0	0	0	0	0	0	0	0	0	0	0	0
R/W	R/W	R/W	R/W	R/W	R/W	R/W	R/W	R/W	R/W	R/W	R/W	R/W	R/W	R/W	R/W	R/W

Table 27.16 TPBAnCMP0 Register Setting

Operating Mode	PWM Period	Minimum Value (Period)	Maximum Value (Period)
8 bits	TPBAnCMP0 + 1	1	100_H
16 bits	TPBAnCMP0 + 1	1	10000_H

CAUTION

- The PWM period is (TPBAnCMP0 + 1) count clock periods. Accordingly, for PWM output with 100% duty cycle, the maximum settable value is $FFFE_H$ (FE_H).
- This register is a register to be reloaded. Rewrite during timer operation is reflected at the next reload timing. For details on reload, see **Section 27.4.2, Compare Register Rewrite Operation**.

27.3.10 TPBAnBUFm — TPBAn Duty Setting Register

This register is a 16 × 64 buffer register for duty setting.

Access: This register can be read/written in 16-bit units.

Address: <TPBAn_base> + m × 4_H

Value after reset: 0000_H

Bit	15	14	13	12	11	10	9	8	7	6	5	4	3	2	1	0
	TPBAnBUFm															
Value after reset	0	0	0	0	0	0	0	0	0	0	0	0	0	0	0	0
R/W	R/W	R/W	R/W	R/W	R/W	R/W	R/W	R/W	R/W	R/W	R/W	R/W	R/W	R/W	R/W	R/W

Table 27.17 TPBAnBUFm Register Contents

Bit Position	Bit Name	Function
15 to 0	TPBAnBUFm15 to TPBAnBUFm0	Sets the duty value. This register can set the duty value either in 16 bits × 64 patterns mode (TPBAnDPS = 0) or 8 bits × 128 patterns mode (TPBAnDPS = 1) by setting the TPBAnDPS bit. In either mode, this register is accessed in 16-bit units by the CPU. For details, see **Section 27.4.3, Duty Rewrite Operation**.

CAUTION

The value set to this register is transferred to the duty setting buffer register (TPBAnCB2) synchronously with a period-matched detection interrupt (INTTPBAnIPRD). Rewrite during timer operation is reflected at any time. For details, see **Section 27.4.3, Duty Rewrite Operation**.

- When duty setting register with 8 bits × 128 patterns is used, the duty is set in the range from 00_H to FF_H.

  The formula to output a waveform of duty 100% is: TPBAnBUFm = TPBAnCMP0 + 1 ≤ $00FF_H$.
  Therefore, when PWM output of duty 100% is required, the maximum value of TPBAnCMP0 is $00FE_H$. When TPBAnBUFm is greater than TPBAnCMP0 + 1, duty value exceeds 100%, but the output becomes 100% in total.
- When duty setting register with 16 bits × 64 patterns is used, the duty is set in the range from 0000H to $FFFF_H$.

  The formula to output a waveform of duty 100% is: TPBAnBUFm = TPBAnCMP0 + 1 ≤ $FFFF_H$.
  Therefore, when PWM output of duty 100% is required, the maximum value of TPBAnCMP0 is $FFFE_H$.
  When TPBAnBUFm is greater than TPBAnCMP0 + 1, the duty value exceeds 100%, but the output becomes 100% in total.

27.3.11 TPBAnCMP1 — TPBAn Pattern Number Setting Register

This register sets the number of PWM output patterns.

Access: This register can be read/written in 8-bit units.

Address: <TPBAn_base> + 104_H

Value after reset: 00_H

Bit	7	6	5	4	3	2	1	0
	—	TPBAnCMP1						
Value after reset	0	0	0	0	0	0	0	0
R/W	R	R/W	R/W	R/W	R/W	R/W	R/W	R/W

Table 27.18 TPBAnCMP1 Register Contents

Bit Position	Bit Name	Function
7	Reserved	When read, the value after reset is read. When writing, write the value after reset.
6 to 0	TPBAnCMP1 [6:0]	Sets the number of patterns within the following range. TPBAnDPS = 0: 0 to 63 TPBAnDPS = 1: 0 to 127

CAUTION

- This register is a register to be reloaded. Rewrite during timer operation is reflected at the next reload timing. For details on reload, see **Section 27.4.2, Compare Register Rewrite Operation**.
- If 64 or a greater number is set as the number of patterns when the duty setting pattern is in 16 bits × 64 patterns mode (TPBAnDPS = 0), the address pointer changes from 63 to 00, and the duty value is transferred from 00 again. A number-of-patterns matched detection interrupt signal (INTTPBAnIPAT) is output by the match of the specified number of patterns and the lower 7-bit values of TPBAnCNT1.

27.3.12 TPBAnCNT0 — TPBAn Timer Counter Register

This register is a timer counter register that generates PWM output.

Access: This register can be read in 16-bit units.

Address: <TPBAn_base> + 108_H

Value after reset: $FFFF_H$

Bit	15	14	13	12	11	10	9	8	7	6	5	4	3	2	1	0
	TPBAnCNT0															
Value after reset	1	1	1	1	1	1	1	1	1	1	1	1	1	1	1	1
R/W	R	R	R	R	R	R	R	R	R	R	R	R	R	R	R	R

16-bit counter

This register is a counter register through which the 16-bit counter value can be read.

27.3.13 TPBAnCNT1 — TPBAn Address Counter Register

This register is a counter register that indicates the address pointer to the duty setting register.

Access: This register can only be read in 8-bit units.

Address: <TPBAn_base> + $10C_H$

Value after reset: 00_H

Bit	7	6	5	4	3	2	1	0
	—	TPBAnCNT1						
Value after reset	0	0	0	0	0	0	0	0
R/W	R	R	R	R	R	R	R	R

7-bit counter

This register is a counter register that indicates the address of the TPBAnBUFm register.

27.3.14 TPBAnTE — TPBAn Enable Status Register

This register indicates whether the timer counter is operating or stopped.

Access: This register can only be read in 8-bit units.

Address: <TPBAn_base> + 128_H

Value after reset: 00_H

Bit	7	6	5	4	3	2	1	0
	—	—	—	—	—	—	—	TPBAnTE0
Value after reset	0	0	0	0	0	0	0	0
R/W	R	R	R	R	R	R	R	R

Table 27.19 TPBAnTE Register Contents

Bit Position	Bit Name	Function
7 to 1	Reserved	When read, the value after reset is read.
0	TPBAnTE0	Indicates whether the timer counter is operating or stopped. 0: The timer counter is stopped. 1: The timer counter is operating. • The TPBAnTE0 bit is set to 1 when 1 is written to the TPBAnTS bit or when a synchronous start trigger is input. • The TPBAnTE0 bit is cleared to 0 when 1 is written to the TPBAnTT bit.

27.3.15 TPBAnTS — TPBAn Start Trigger Register

This register controls the timer counter start trigger.

Access: This register can only be written in 8-bit units. It is always read as 0.

Address: <TPBAn_base> + $12C_H$

Value after reset: 00_H

Bit	7	6	5	4	3	2	1	0
	—	—	—	—	—	—	—	TPBAnTS0
Value after reset	0	0	0	0	0	0	0	0
R/W	R	R	R	R	R	R	R	W

Table 27.20 TPBAnTS Register Contents

Bit Position	Bit Name	Function
7 to 1	Reserved	When writing, write the value after reset.
0	TPBAnTS0	This bit is a trigger bit that enables the timer counter. 0: Write access is ignored. 1: Starts counting (TPBAnTE = 1).

CAUTION

Write access to this register during counting (TPBAnTE = 1) is ignored.

27.3.16 TPBAnTT — TPBAn Stop Trigger Register

This register controls the timer counter stop trigger.

Access: This register can only be written in 8-bit units. It is always read as 0.

Address: <TPBAn_base> + 130_H

Value after reset: 00_H

Bit	7	6	5	4	3	2	1	0
	—	—	—	—	—	—	—	TPBAnTT0
Value after reset	0	0	0	0	0	0	0	0
R/W	R	R	R	R	R	R	R	W

Table 27.21 TPBAnTT Register Contents

Bit Position	Bit Name	Function
7 to 1	Reserved	When writing, write the value after reset.
0	TPBAnTT0	This bit is a trigger bit that disables the timer counter. 0: Write access is ignored. 1: Disables counting (TPBAnTE = 0).

27.4 Function

27.4.1 Basic Operation

27.4.1.1 Basic Operation of 16-Bit Counter (TPBAnCNT0)

Counting start

The 16-bit counter (TPBAnCNT0) starts counting from the value after reset $FFFF_H$.

Counter clear

The 16-bit counter is cleared by the match of the counter value and the buffer register (TPBAnCB0) set value of TPBAnCMP0.

Counter read during counting

The 16-bit counter value during counting can be read through TPBAnCNT0.

27.4.1.2 Basic Operation of 7-Bit Counter (TPBAnCNT1)

Counting start

The 7-bit counter (TPBAnCNT1) is initialized to 00_H and starts counting. Subsequently, the counter value is incremented synchronously with a period-matched detection interrupt (INTTPBAnIPRD).

Counter clear

The 7-bit counter is cleared by the match of the counter value and the buffer register (TPBAnCB1) set value of TPBAnCPM1.

Counter read during counting

The 7-bit counter value during counting can be read through TPBAnCNT1. The read value indicates TPBAnBUFm in which the duty value to be transferred next is stored.

27.4.2 Compare Register Rewrite Operation

The following registers are rewritten by reload.

- TPBAnCMP0
- TPBAnCMP1
- TPBAnTOL

Reload mode (simultaneous rewrite function)

Writing to TPBAnRDT enables reload of the registers corresponding to the set bits (sets the reload request flag (TPBAnRSF.TPBAnRSFk)), and the values of all the pertinent registers are updated simultaneously at the next reload timing (reload).

The reload timing of TPBAnCMP0 and TPBAnTOL is set by TPBAnRDM.

The reload timing of TPBAnCMP1 is the match timing (INTTPBAnIPAT) of the 7-bit counter (TPBAnCNT1) and the buffer register (TPBAnCB1) of TPBAnCMP1.

The registers to be reloaded should be rewritten when the reload request flag (TPBAnRFS.TPBAnRSFk) is 0.

Note: k = 0, 1

Setting Flow for Registers to Be Reloaded

The rewritten values of the registers to be reloaded (TPBAnCMP0, TPBAnCMP1, and TPBAnTOL) can be transferred to the respective buffer registers simultaneously at the reload timing.

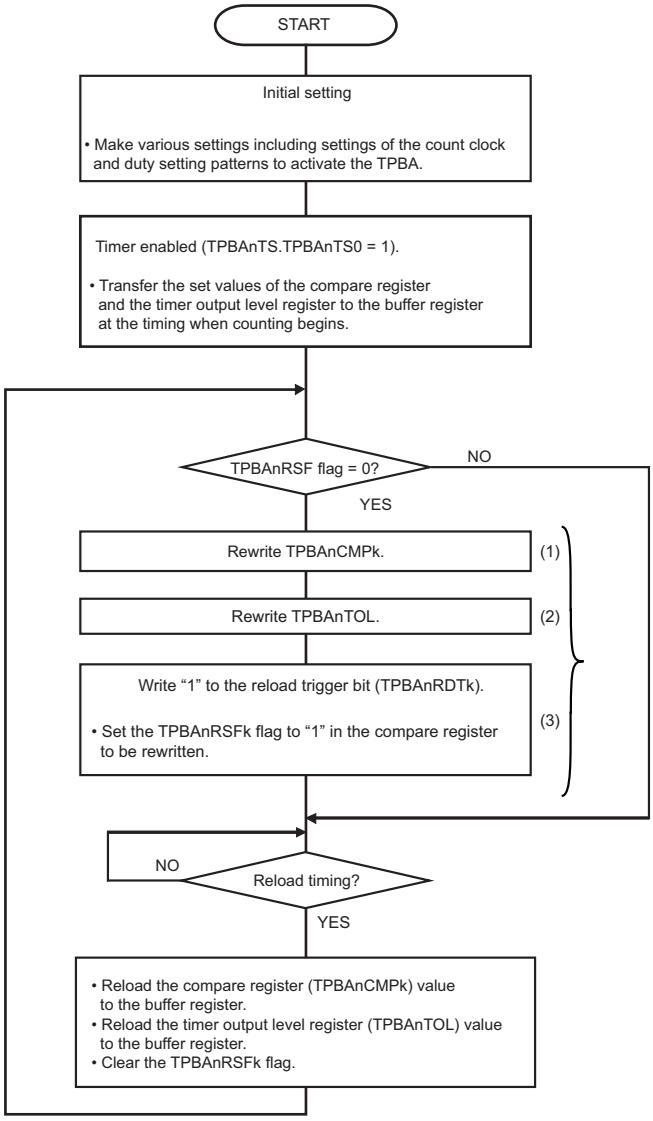

Note: k = 0, 1

Figure 27.2 Basic Operation Flow of Reload (Simultaneous Rewrite Function)

CAUTION

Setting the TPBAnRDTk bit to 1 enables reload. Accordingly, the TPBAnRDTk bit should be rewritten after the registers to be reloaded have been rewritten.

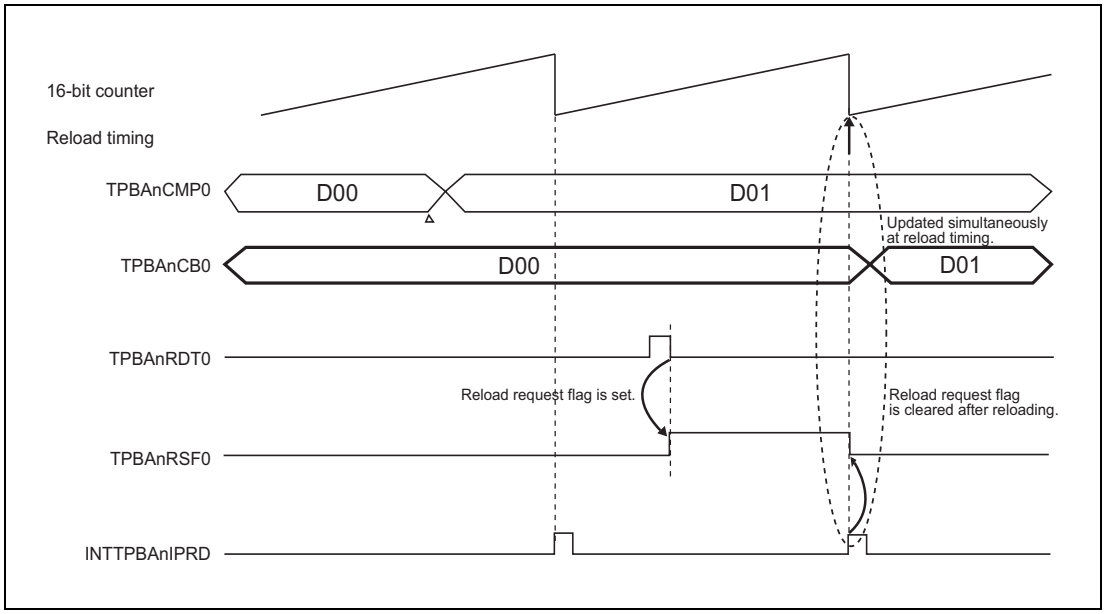

Figure 27.3 Simultaneous Rewrite Timing (TPBAnDPS = 0, TPBAnRDM = 0, and TPBAnTOL = 0)

27.4.3 Duty Rewrite Operation

TPBAnBUFm can be rewritten during operation.

The rewritten setting is reflected immediately.

27.4.3.1 TPBAnBUFm Setting Flow

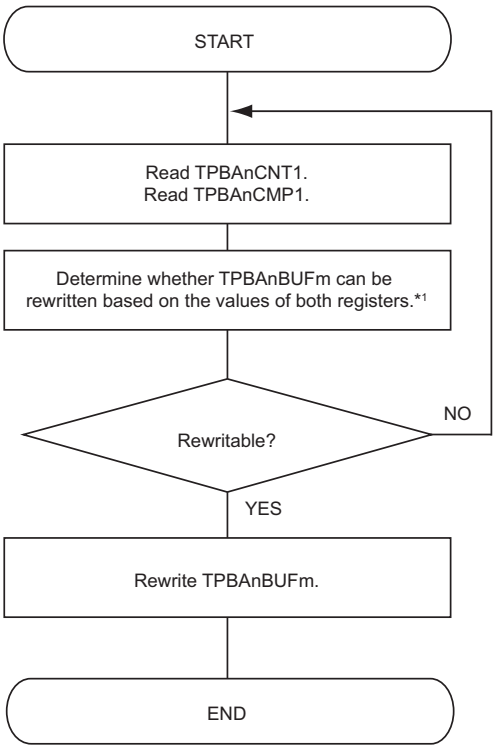

Note 1. Since TPBAnBUFm can be written at any time, it is recommended that this register is rewritten during last duty cycle output (TPBAnCNT1 = 00_H) of the pattern period (the number of patterns specified by TPBAnCMP1).

Figure 27.4 Basic Rewrite Flow of TPBAnBUFm

27.4.3.2 Access to TPBAnBUFm

TPBAnBUFm is accessed in 16 bit units. The following shows the access in 16 bits × 64 patterns mode and the access in 8 bits × 128 patterns mode.

- In 16 bits × 64 patterns mode (TPBAnDPS = 0)
  This register is accessed by the CPU in units of one 16-bit pattern.

15 … 0	
Pattern 64	$00FC_H$
Pattern 63	$00F8_H$
:	:
Pattern 3	0008_H
Pattern 2	0004_H
Pattern 1	0000_H

- In 8 bits × 128 patterns mode (TPBAnDPS = 1)
  This register is accessed by the CPU in units of two 8-bit patterns.

15 … 8	7 … 0	
Pattern 128	Pattern 127	$00FC_H$
Pattern 126	Pattern 125	$00F8_H$
:	:	:
Pattern 6	Pattern 5	0008_H
Pattern 4	Pattern 3	0004_H
Pattern 2	Pattern 1	0000_H

27.4.3.3 Relationship between TPBAnCNT1 Read Value and TPBAnBUFm

The duty value of the currently output PWM waveform can be obtained by reading the TPBAnCNT1 count value during operation. TPBAnBUFm in which the currently output duty value is stored can be found by one of the following formulas.

Table 27.22 TPBAnBUFm Formula

	Formula		
TPBAnDPS Bit	**TPBAnCNT1 ≠ 00_H**		**TPBAnCNT1 = 00_H**
0: 16 bits × 64 patterns mode	TPBAnCNT1 - 01_H(1)		TPBAnCMP1(2)
1: 8 bits × 128 patterns mode	TPBAnCNT1 value is an odd number	TPBAnCNT1/2(3)	TPBAnCMP1/2(5)
	TPBAnCNT1 value is an even number	(TPBAnCNT1 / 2) - 01_H(4)	

(1) When TPBAnDPS = 0 and the TPBAnCNT1 ≠ 00_H
The applicable register is found by the formula TPBAnCNT1 – 01_H.
(Example) When TPBAnCNT1 = 08_H: 08_H – 01_H = 07_H → TPBA0BUF07

(2) When TPBAnDPS = 0 and the TPBAnCNT1 = 00_H
The applicable register is found by the TPBAnCMP1 value.
(Example) When TPBAnCMP1 = 08_H: TPBAnBUF08

(3) When TPBAnDPS = 1 and the TPBAnCNT1 = an odd number
The applicable register is found by the formula TPBAnCNT1 / 2
(Example) When TPBAnCNT1 = 07_H: 07_H / 02_H = 03_H → TPBAnBUF03 (lower 8 bits)

(4) When TPBAnDPS = 1 and the TPBAnCNT1 = an even number
The applicable register is found by the formula (TPBAnCNT1 / 2) – 01_H.
(Example) When TPBAnCNT1 = 08_H: (08_H / 02_H) – 01_H = 03_H → TPBAnBUF03 (upper 8 bits)

(5) When TPBAnDPS = 1 and the TPBAnCNT1 = 00_H
The applicable register is found by the formula TPBAnCMP1 / 2.
(Example) When TPBAnCMP1 = 08_H: 08_H / 2 = 04_H → TPBAnBUF04 (lower 8 bits)

27.4.4 Basic Operation Example

Overview

A PWM signal is output from the TPBAnO pin according to the PWM period set in the TPBAnCMP0 register and duty cycle set in the TPBAnBUF00 to TPBAnBUF63 registers.

Prerequisites

- Select 16 bits × 64 patterns mode or 8 bits × 128 patterns mode by setting TPBAnDPS.
- Set the duty cycle to TPBAnBUF00 to TPBAnBUF63.
- Set the number of patterns to TPBAnCMP1.

Functional description

Set the PWM period, the number of patterns, duty cycle, and level to be output. Set TPBAnTS.TPBSnTS0 = 1 (or input a synchronous start trigger) to start incrementing the timer counter value.

The TPBAnO output is set to the active level at the same time the counting begins. TPBAnCNT1 is incremented, and points to the address of the buffer in which the subsequent duty value is stored.

The output is set to the inactive level by the match of the 16-bit counter and the TPBAnBUFm buffer register (TPBAnCB2).

The duty value is then transferred from TPBAnBUFm to the buffer register (TPBAnCB2) by the match of the 16-bit counter and the TPBAnCMP0 buffer register (TPBAnCB0). Then, TPBAnCNT1 is incremented, and a period-matched detection interrupt (INTTPBAnIPRD) is generated. The TPBAnO output is set to the active level after one count clock.

During counting, a duty-cycle-matched detection interrupt (INTTPBAnIDTY) is generated by the match of the 16-bit counter and the buffer register (TPBAnCB2) of TPBAnBUFm.

A number-of-patterns matched detection interrupt (INTTPBAnIPAT) is generated by the match of the 7-bit counter and the TPBAnCMP1 buffer register (TPBAnCB1).

27.4.4.1 List of Operations

Table 27.23 16-Bit Counter Function

Operation		Setting Condition
16-bit counter	Start	Writing 1 to TPBAnTS or simultaneous start trigger.
	Clear	Compare match of TPBAnCMP0 buffer register and 16-bit counter
	Stop	Writing 1 to TPBAnTT

Table 27.24 7-Bit Counter Function

Operation		Setting Condition
7-bit counter	Start	Writing 1 to TPBAnTS or simultaneous start trigger.
	Clear	Compare match of TPBAnCMP1 buffer register and 7-bit counter
	Stop	Writing 1 to TPBAnTT

Table 27.25 Functions of Compare Registers and Buffer Registers

Register (Data)	Buffer Register	Rewrite Method	Rewrite during Operation	Function
TPBAnCMP0	TPBAnCB0	Reload	Possible	Setting period
TPBAnCMP1	TPBAnCB1	Reload	Possible	Setting number of patterns
TPBAnBUFm	TPBAnCB2	Rewrite at any time	Possible	Setting duty
TPBAnTOL	TPBAnTOLB	Reload	Possible	Setting output level

Buffer Registers

The registers that specify period, the number of patterns, duty, and timer output level consist of data registers that a user can directly set and buffer registers that a user cannot directly set.

Table 27.26 Timer Output Function

Pin	Function
TPBAnO	• When output is enabled (TPBAnTOE = 01_H) PWM output by compare match of the TPBAnBUFm buffer register (TPBAnCB2) and the 16-bit counter • When output is disabled (TPBAnTOE = 00_H) TPBAnTO set value

Table 27.27 Interrupt Requests

Interrupt	Function
INTTPBAnIPRD	Period-matched detection interrupt
INTTPBAnIDTY	Duty-cycle-matched detection interrupt
INTTPBAnIPAT	Number-of-patterns matched detection interrupt

Table 27.28 Compare Match Timing

Compare Match	Timing
TPBAnCMP0	When the 16-bit counter changes from TPBAnCMP0 to 0000_H.
TPBAnCMP1	When the 7-bit counter changes from TPBAnCMP1 to 01_H.
TPBAnBUFm	When the 16-bit counter matches with the buffer register (TPBAnCB2).

Table 27.29 Example of Setting Each Timer Output Condition

Pin	Item	Output Period	Output Duty	
			Output Condition	**Setting Condition**
TPBAnO	PWM output	(TPBAnCMP0 + 1) × count clock	Outputs an inactive level throughout one period (duty cycle 0%).	TPBAnBUFm = 0000_H
			Outputs an active level of one count clock in one period.	TPBAnBUFm = 0001_H
			Outputs an inactive level of one count clock in one period	TPBAnBUFm = TPBAnCMP0
			Outputs an active level throughout one period (duty cycle 100%).	TPBAnBUFm ≥ TPBAnCMP0 + 1

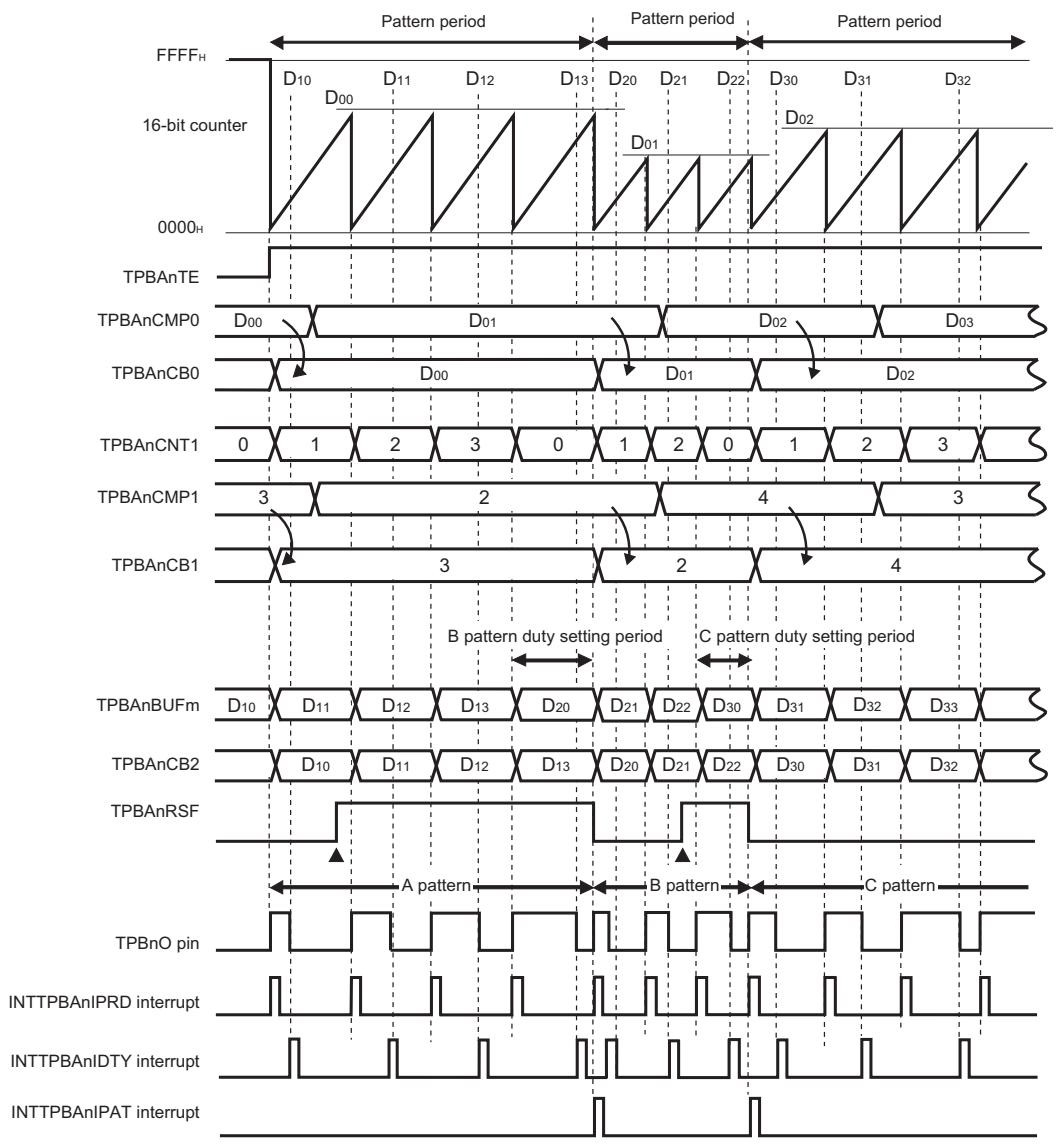

Note 1. PWM duty cycle = (TPBAnBUFm) / (TPBAnCMP0 set value + 1)
PWM period = (TPBAnCMP0 set value + 1) × (count clock period)

Note 2. ▲: Writing 1 to TPBAnRDT

Figure 27.5 Example of Basic Timing (1/2)

CAUTION

TPBAnO outputs active level 1 count clock after output of INTTPBAnIPRD and outputs inactive level at INTTPBAnIDTY output timing.

When a number-of-patterns matched detection interrupt is used as a trigger of the TPBAnCMP0 and TPBAnTOL reload timing (TPBAnIRDM.TPBAnRDM0 = 0 and TPBAnTOL = 0)

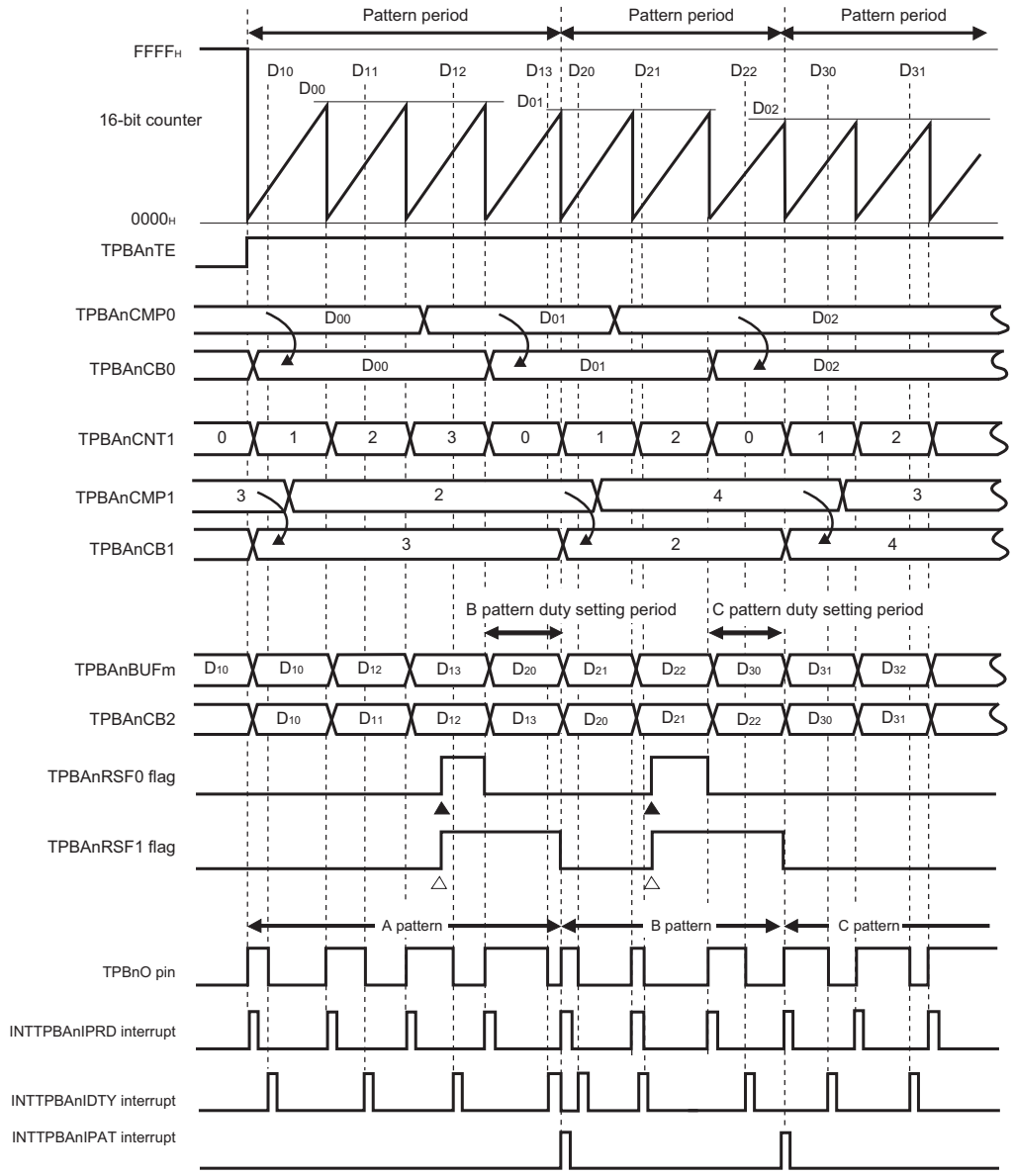

Note 1. PWM duty cycle = (TPBAnBUFm) / (TPBAnCMP0 set value + 1)
PWM period = (TPBAnCMP0 set value + 1) × (count clock period)

Note 2. ▲: Writing 1 to TPBAnRDT0

Note 3. Δ: Writing 1 to TPBAnRDT1

Figure 27.6 Example of Basic Timing (2/2)

CAUTION

TPBAnO outputs active level 1 count clock after output of INTTPBAnIPRD and outputs inactive level at INTTPBAnIDTY output timing.

When a period-matched detection interrupt is used as a trigger of the TPBAnCMP0 and TPBAnTOL reload timing (TPBAnIRDM.TPBAnRDM0 = 1 and TPBAnTOL = 0)

Section 28 Encoder Timer (ENCA)

This section contains a generic description of the Encoder Timer (ENCA).

The first part of this section describes all RH850/P1x specific properties, such as the number of units, register base addresses, etc. The remainder of the section describes the functions and registers of the ENCA.

28.1 Features of RH850/P1x ENCA

28.1.1 Units and Channels

This microcontroller has the following number of ENCA units.

Each ENCA unit has one channel ENCA. “Number of channels” is used with the same meaning as “number of units” in this section.

Table 28.1 Units

Product	RH850/P1x 100 pins (eVR)	RH850/P1x 100 pins (DPS)	RH850/P1x 144 pins (eVR)	RH850/P1x 144 pins (DPS)
Number of Units	2			
Name	ENCAn (n = 0, 1)			

Table 28.2 ENCA Unit Configurations and Channels

Unit Name (Channel Name) ENCAn	Channels per Unit	RH850/P1x 100 pins (eVR)	RH850/P1x 100 pins (DPS)	RH850/P1x 144 pins (eVR)	RH850/P1x 144 pins (DPS)
ENCA0	1	√	√	√	√
ENCA1	1	√	√	√	√

Table 28.3 Index

Index	Meaning
n	Throughout this section, the individual ENCA units are identified by the index “n” (n = 0, 1); for example, ENCAnCTL is the ENCAn control register.

28.1.2 Register Base Address

ENCAn base addresses are listed in the following table.

ENCAn register addresses are given as offsets from the base addresses in general.

Table 28.4 Register Base Address

Base Address Name	Base Address
<ENCA0_base>	FFE8 0000_H
<ENCA1_base>	FFE8 1000_H

28.1.3 Clock Supply

Clock supply by and to ENCAn is listed in the following table.

Table 28.5 Clock Supply

Unit Name	Clock for the Unit	Supply Clock Name
ENCAn	PCLK	High-speed peripheral clock CLK_HSB

28.1.4 Interrupt Requests

ENCAn interrupt requests are listed in the following table.

Table 28.6 Interrupt Requests

Unit Interrupt Name	Outline	Interrupt Number	DMA/DTS Trigger Number	Others
ENCA0				
ENCATIOV	Overflow interrupt	276	—	—
ENCATIUD	Underflow interrupt	279	—	PIC1
ENCATINT0	Capture/compare match interrupt 0	277	107	—
ENCATINT1	Capture/compare match interrupt 1	278	108	PIC2
ENCATIEC	Encoder clear interrupt	280	—	PIC1
ENCA1				
ENCATIOV	Overflow interrupt	281	—	—
ENCATIUD	Underflow interrupt	284	—	—
ENCATINT0	Capture/compare match interrupt 0	282	109	—
ENCATINT1	Capture/compare match interrupt 1	283	110	PIC2
ENCATIEC	Encoder clear interrupt	285	—	PIC1

28.1.5 Reset Sources

ENCAn reset source is listed in the following table. ENCAn is initialized by this reset source.

Table 28.7 Reset Source

Unit Name	Reset Source
ENCAn	All reset sources (SYSRES)

28.1.6 External Input/Output Signals

External input/output signals of ENCAn are listed below.

Table 28.8 External Input/Output Signals

Unit Signal Name	Outline	Alternative port pin signal
ENCA0		
ENCA0TTIN0	ENCA0 capture trigger input 0*1	ENCA0TIN0*2
ENCA0TTIN1	ENCA0 capture trigger input 1*1	ENCA0TIN1*2
ENCA0E0	ENCA0 encoder input 0*1	ENCA0E0*2
ENCA0E1	ENCA0 encoder input 1*1	ENCA0E1*2
ENCA0EC	ENCA0 encoder clear input*1	ENCA0EC*2
ENCA1		
ENCA1TTIN0	ENCA1 capture trigger input 0*1	ENCA1TIN0*2
ENCA1TTIN1	ENCA1 capture trigger input 1*1	ENCA1TIN1*2
ENCA1E0	ENCA1 encoder input 0*1	ENCA1E0*2
ENCA1E1	ENCA1 encoder input 1*1	ENCA1E1*2
ENCA1EC	ENCA1 encoder clear input*1	ENCA1EC*2

Note 1. Setting of the noise filter for the port is required when the channel input pin is used. For details, see **Section 2.6, Noise Filter and Edge Level Detection Circuit**.

Note 2. The input signal can be selected by the PIC function. For details, see Section 29.2.2.23, PIC1AREG30 — Timer Input/Output Control Register 30.

28.2 Overview

28.2.1 Functional Overview

- Generation of the counter control signal from the encoder input signal, and performs count operation in synchronization with PCLK.
- Capture function for capturing the counter value with an external trigger signal
- Compare function for compare match judgment with the counter value
- Two capture compare registers that can be set separately for capture operation and for compare operation
- Interrupt mask function for masking the interrupt request signal output as a result of compare match judgment during compare operation
- Function for loading the value of the capture compare register to the counter upon underflow occurrence
- Encoder input signal can be applied to the timer counter clear condition
- Edge or level for clearing the encoder input signal of the timer counter clear condition can be selected
- Detection of counter overflow and underflow and output of error flags and error interrupts
- Five interrupts: 2 capture compare interrupts, 1 counter clear interrupt, 1 overflow interrupt, and 1 underflow interrupt.

28.2.2 Block Diagram

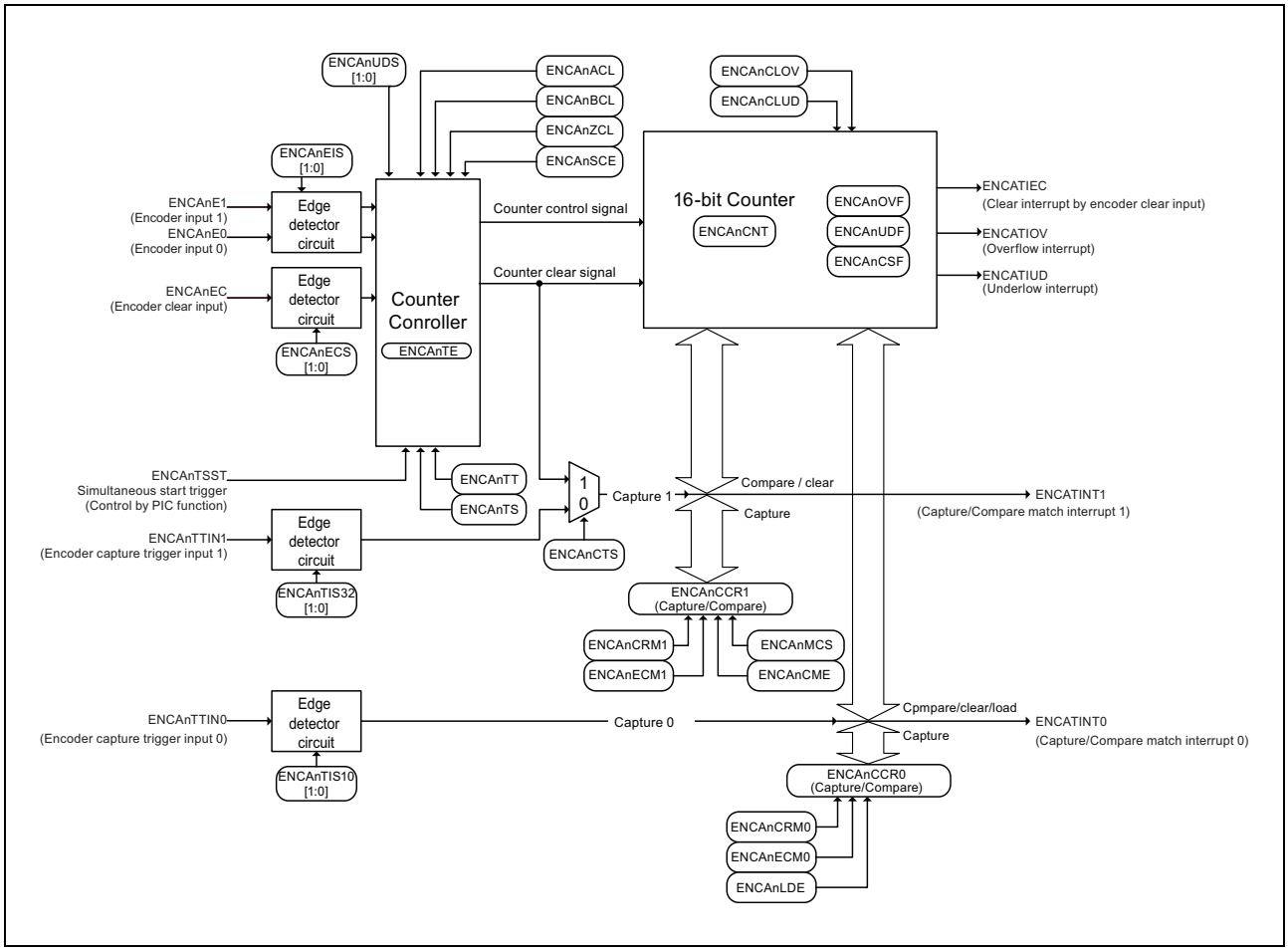

Figure 28.1 Encoder Timer Block Diagram

28.3 Registers

28.3.1 List of Registers

ENCA registers are listed in the following table.

For details about <ENCA_base>, see **Section 28.1.2, Register Base Address**.

Table 28.9 Registers

Module	Register	Symbol	Address
ENCAn	ENCA capture compare register 0	ENCAnCCR0	<ENCAn_base>
ENCAn	ENCA capture compare register 1	ENCAnCCR1	<ENCAn_base> + 04_H
ENCAn	ENCA counter register	ENCAnCNT	<ENCAn_base> + 08_H
ENCAn	ENCA status flag register	ENCAnFLG	<ENCAn_base> + $0C_H$
ENCAn	ENCA status flag clear register	ENCAnFGC	<ENCAn_base> + 10_H
ENCAn	ENCA timer enable status register	ENCAnTE	<ENCAn_base> + 14_H
ENCAn	ENCA timer start trigger register	ENCAnTS	<ENCAn_base> + 18_H
ENCAn	ENCA timer stop trigger register	ENCAnTT	<ENCAn_base> + $1C_H$
ENCAn	ENCA I/O control register 0	ENCAnIOC0	<ENCAn_base> + 20_H
ENCAn	ENCA control register	ENCAnCTL	<ENCAn_base> + 40_H
ENCAn	ENCA I/O control register 1	ENCAnIOC1	<ENCAn_base> + 44_H

28.3.2 ENCAnCTL — ENCA Control Register

This register is used to configure various operation settings of the Encoder Timer.

Access: This register can be read/written in 16-bit units.
Writing to this register during operation is prohibited.

Address: <ENCAn_base> + 40_H

Value after reset: 0000_H

Bit	15	14	13	12	11	10	9	8	7	6	5	4	3	2	1	0
	ENCAn CME	ENCAn MCS	—	—	—	—	ENCAn CRM1	ENCAn CRM0	ENCAn CTS	—	—	ENCAn LDE	ENCAn ECM1	ENCAn ECM0	ENCAnUDS [1:0]	
Value after reset	0	0	0	0	0	0	0	0	0	0	0	0	0	0	0	0
R/W	R/W	R/W	R	R	R	R	R/W	R/W	R/W	R	R	R/W	R/W	R/W	R/W	R/W

Table 28.10 ENCAnCTL Register Contents (1/2)

Bit Position	Bit Name	Function
15	ENCAnCME	Encoder Clear Mask Enable This bit is used to enable/disable masking of compare match interrupt detection when the compare function is used. 0: Disables the compare match interrupt (ENCATINT1) mask function for the ENCAnCCR1 register 1: Enables the compare match interrupt (ENCATINT1) mask function for the ENCAnCCR1 register. This bit is valid only when ENCAnCRM1 = 0. When this bit is set to 1, setting ENCAnECM1 to 1 is prohibited.
14	ENCAnMCS	Encoder Mask Clear Select This bit is used to select the trigger for cancelling masking of compare match interrupt detection ENCATINT1 when the compare function is used. This bit is valid only when ENCAnCRM1 = 0. 0: Masking of compare match interrupt detection is cancelled when the ENCAnCCR1 register is written. 1: Masking of compare match interrupt detection is cancelled when one of the following three operations is performed. – Encoder clear input operation – Timer counter clear operation upon compare match between ENCAnCNT and ENCAnCCR0 when ENCAnECM0 = 1 – Loading from ENCAnCCR0 to timer counter upon underflow detection when ENCAnLDE = 1
13 to 10	Reserved	When read, the value after reset is read. When writing, write the value after reset.
9	ENCAnCRM1	ENCAnCCR1 Register Mode 0: ENCAnCCR1 used as compare register. 1: ENCAnCCR1 used as capture register.
8	ENCAnCRM0	ENCAnCCR0 register mode bit 0: ENCAnCCR0 used as compare register. 1: ENCAnCCR0 used as capture register.
7	ENCAnCTS	ENCAnCCR1 Capture Trigger Select This is a trigger selection bit for the capture operation to the ENCAnCCR1 register. This bit is valid only when ENCAnCRM1 = 1. 0: Uses ENCAnTTIN1 of capture trigger 1 signal as the trigger for capturing to the ENCAnCCR1 register. 1: Uses the encoder clear signal selected by ENCAnSCE as the capture trigger to the ENCAnCCR1 register.
6, 5	Reserved	When read, the value after reset is read. When writing, write the value after reset.

Table 28.10 ENCAnCTL Register Contents (2/2)

Bit Position	Bit Name	Function
4	ENCAnLDE	ENCAn Counter Load Enable This bit is used to enable/disable setting value loading to the counter upon underflow occurrence. This bit is valid only when ENCAnCRM0 = 0. When ENCAnCRM0 = 1, loading of the ENCAnCCR0 register setting value to the counter upon occurrence of an underflow is not performed, regardless of the value of this bit. 0: Disable loading of ENCAnCCR0 register setting value to counter upon occurrence of a counter underflow. 1: Enable loading of ENCAnCCR0 register setting value to counter upon occurrence of a counter underflow.
3	ENCAnECM1	Encoder Clear Mode 1 This bit is used to set the counter clear operation upon match between the counter value and ENCAnCCR1 setting value. This bit is valid only when ENCAnCRM1 = 0. 0: Does not clear the counter to 0000_H upon match of timer counter value and ENCAnCCR1 setting value. 1: Clears the counter to 0000_H upon match of timer counter value and ENCAnCCR1 setting value if the next count is a down-count.
2	ENCAnECM0	Encoder Clear Mode 0 This bit is used to set the counter clear operation upon match between the counter value and ENCAnCCR0 setting value. This bit is valid only when ENCAnCRM0 = 0. 0: Does not clear the counter to 0000_H upon match of timer counter value and ENCAnCCR0 setting value. 1: Clears the counter to 0000_H upon match of timer counter value and ENCAnCCR0 setting value if the next count is a up-count.
1, 0	ENCAnUDS[1:0]	UPDOWN Count Selection 1 and 0 These are the counter up/down control bits that use ENCAnE0 and ENCAnE1. 00: Upon detection of valid edge of ENCAnE0, - down-count when ENCAnE1 = H, - up-count when ENCAnE1 = L 01: Upon detection of valid edge of ENCAnE0, up-count, Upon detection of valid edge of ENCAnE1, down-count 10: At rising edge of ENCAnE0, down-count At falling edge of ENCAnE0, up-count However, count operation is performed only when ENCAnE1 = L. 11: Detection of both edges of ENCAnE0 and ENCAnE1. Judgment of count operation combining both detected edge and level.

28.3.3 ENCAnIOC0 — ENCA I/O Control Register 0

This register is used to select the input edge of capture triggers 0 and 1 (ENCAnTTIN0, ENCAnTTIN1).

Access: This register can be read/written in 8-bit units.

Address: <ENCAn_base> + 20_H

Value after reset: 00_H

Bit	7	6	5	4	3	2	1	0
	—	—	—	—	ENCAnTIS32[1:0]		ENCAnTIS10[1:0]	
Value after reset	0	0	0	0	0	0	0	0
R/W	R	R	R	R	R/W	R/W	R/W	R/W

Table 28.11 ENCAnIOC0 Register Contents

Bit Position	Bit Name	Function
7 to 4	Reserved	When read, the value after reset is read. When writing, write the value after reset.
3, 2	ENCAnTIS32 [1:0]	Input Edge Selection for Capture Trigger 1 These bits are valid only when the ENCAnCTL register's ENCAnCRM1 = 1 and ENCAnCTS = 0. All other settings of ENCAnCRM1 and ENCAnCTS are invalid. 00: No edge detection 01: Rising edge detection 10: Falling edge detection 11: Both edges detection
1, 0	ENCAnTIS10 [1:0]	Input Edge Selection for Capture Trigger 0 These bits are valid only when ENCAnCTL.ENCAnCRM0 = 1. 00: No edge detection 01: Rising edge detection 10: Falling edge detection 11: Both edges detection

28.3.4 ENCAnIOC1 — ENCA I/O Control Register 1

This register is used to perform the clear condition setting and edge selection upon encoder input.

Access: This register can be read/written in 8-bit units.
Writing to this register during operation is prohibited.

Address: <ENCAn_base> + 44_H

Value after reset: 00_H

Bit	7	6	5	4	3	2	1	0
	ENCAnSCE	ENCAnZCL	ENCAnBCL	ENCAnACL	ENCAnECS[1:0]		ENCAnEIS[1:0]	
Value after reset	0	0	0	0	0	0	0	0
R/W	R/W	R/W	R/W	R/W	R/W	R/W	R/W	R/W

Table 28.12 ENCAnIOC1 Register Contents

Bit Position	Bit Name	Function
7	ENCAnSCE	Encoder Special-clear Enable This is an encoder special clear enable bit. When setting this bit to 1, set ENCAnUDS[1:0] to 10_B or 11_B. The operation is not guaranteed if this bit is set to 1 with ENCAnUDS[1:0] set to 00_B or 01_B. 0: Clears the counter upon detection of ENCAnEC valid edge (set with ENCAnECS[1:0]). 1: Clears the counter upon detection of input level condition of ENCAnEC, ENCAnE1, and ENCAnE0 (set with ENCAnZCL bit, ENCAnBCL bit, and ENCAnACL bit).
6	ENCAnZCL	Input-Z Clear Condition Selection This bit is used to set the condition for clearing the encoder clear input (ENCAnEC) when using the encoder special clear function. This bit is valid only when ENCAnSCE = 1; it is invalid when ENCAnSCE = 0. 0: Clear condition: Low level 1: Clear condition: High level
5	ENCAnBCL	Input-B Clear Condition Selection This bit is used to set the condition for clearing the encoder input 1 (ENCAnE1) when using the encoder special clear function. This bit is valid only when ENCAnSCE = 1; it is invalid when ENCAnSCE = 0. 0: Clear condition: Low level 1: Clear condition: High level
4	ENCAnACL	Input-A Clear Condition Selection This bit is used to set the condition for clearing the encoder input 0 input (ENCAnE0) when using the encoder special clear function. This bit is valid only when ENCAnSCE = 1; it is invalid when ENCAnSCE = 0. 0: Clear condition: Low level 1: Clear condition: High level
3, 2	ENCAnECS[1:0]	Encoder Clear Input Edge Selection 1 and 0 These are the encoder clear input edge selection bits. These bits are valid only when ENCAnSCE = 0; they are invalid when ENCAnSCE = 1. 00: No edge detection 01: Rising edge detection 10: Falling edge detection 11: Both edges detection
1, 0	ENCAnEIS[1:0]	Encoder Edge Input Selection 1 and 0 These are the encoder input edge selection bits. These bits are valid when ENCAnUDS[1:0] is 00_B or 01_B, and are invalid when ENCAnUDS[1:0] is 10_B or 11_B. 00: No edge detection 01: Rising edge detection 10: Falling edge detection 11: Both edges detection

28.3.5 ENCAnFLG — ENCA Status Flag Register

This register is holds the status flags of the timer counter of ENCAn.

Access: This register can only be read in 8-bit units.

Address: <ENCAn_base> + $0C_H$

Value after reset: 00_H

Bit	7	6	5	4	3	2	1	0
	—	—	—	—	—	ENCAnCSF	ENCAnUDF	ENCAnOVF
Value after reset	0	0	0	0	0	0	0	0
R/W	R	R	R	R	R	R	R	R

Table 28.13 ENCAnFLG Register Contents

Bit Position	Bit Name	Function
7 to 3	Reserved	When read, the value after reset is read.
2	ENCAnCSF	Counter Status Flag This bit reflects the current timer counter operation. This bit is cleared at the start of count operation. 0: Timer counter in up-count status 1: Timer counter in down-count status
1	ENCAnUDF	Underflow Flag This bit reflects the occurrence of an underflow during the timer counter operation. This bit is cleared at the start of count operation. 0: This flag is cleared upon any of the following events: – 1 is written to ENCAnFGC.ENCAnCLUD – ENCAnTS is set while ENCAnTE = 0 – The input signal of ENCAnTSST is set to “High level” 1: This flag is set to 1 upon occurrence of an underflow during the encoder timer count operation.
0	ENCAnOVF	Overflow Flag This bit reflects the occurrence of an overflow during the timer counter operation. This bit is cleared at the start of count operation. 0: This flag is cleared upon any of the following events: – 1 is written to ENCAnFGC.ENCAnCLOV – ENCAnTS is set while ENCAnTE = 0 – The input signal of ENCAnTSST is set to “High level” 1: This flag is set to 1 upon occurrence of an overflow during the encoder timer count operation.

28.3.6 ENCAnFGC — ENCA Status Flag Clear Register

This register is used to clear the timer counter status flags of ENCAnFLG.

Access: This register can only be written in 8-bit units.
This register always returns 0 when read.

Address: <ENCAn_base> + 10_H

Value after reset: 00_H

Bit	7	6	5	4	3	2	1	0
	—	—	—	—	—	—	ENCAnCLUD	ENCAnCLOV
Value after reset	0	0	0	0	0	0	0	0
R/W	R	R	R	R	R	R	W	W

Table 28.14 ENCAnFGC Register Contents

Bit Position	Bit Name	Function
7 to 2	Reserved	When writing, write the value after reset.
1	ENCAnCLUD	Underflow Flag Clear This bit clears the underflow flag. 0: Writing is ignored. 1: Clears ENCAnUDF of the ENCAnFLG register (clears underflow detection).
0	ENCAnCLOV	Overflow Flag Clear This bit clears the overflow flag. 0: Writing is ignored. 1: Clears ENCAnOVF of the ENCAnFLG register (clears overflow detection).

28.3.7 ENCAnCCR0 — ENCA Capture Compare Register 0

This register is a 16-bit capture compare register 0.

Access: This register can only be read/written in 16-bit units.
When used as a capture register, this register is only readable. Writing to this register is ignored.
When used as a compare register, this register is readable/writable.

Address: <ENCAn_base> + 00_H

Value after reset: 0000_H

Bit	15	14	13	12	11	10	9	8	7	6	5	4	3	2	1	0
	ENCAnCCR0[15:0]															
Value after reset	0	0	0	0	0	0	0	0	0	0	0	0	0	0	0	0
R/W	R/W	R/W	R/W	R/W	R/W	R/W	R/W	R/W	R/W	R/W	R/W	R/W	R/W	R/W	R/W	R/W

Table 28.15 ENCAnCCR0 Register Contents

Bit Position	Bit Name	Function
15 to 0	ENCAnCCR0 [15:0]	Capture Compare Register 0 Upon occurrence of an underflow, the setting value of this register may be loaded to the counter according to the ENCAnCTL.ENCAnLDE setting. See the description of the ENCAnLDE bit in ENCA control register ENCAnCTL for details. • If ENCAnCTL.ENCAnCRM0 = 0: ENCAnCCR0 is compare register. Set the value to be compared with the timer counter value. • If ENCAnCTL.ENCAnCRM0 = 1: ENCAnCCR0 is capture register The captured timer counter value is stored.

28.3.8 ENCAnCCR1 – ENCA Capture Compare Register 1

This register is a 16-bit capture compare register 1.

Access: This register can only be read/written in 16-bit units.
When used as a capture register, this register is only readable. Writing to this register is ignored.
When used as a compare register, this register is readable/writable.

Address: <ENCAn_base> + 04_H

Value after reset: 0000_H

Bit	15	14	13	12	11	10	9	8	7	6	5	4	3	2	1	0
	ENCAnCCR1[15:0]															
Value after reset	0	0	0	0	0	0	0	0	0	0	0	0	0	0	0	0
R/W	R/W	R/W	R/W	R/W	R/W	R/W	R/W	R/W	R/W	R/W	R/W	R/W	R/W	R/W	R/W	R/W

Table 28.16 ENCAnCCR1 Register Contents

Bit Position	Bit Name	Function
15 to 0	ENCAnCCR1 [15:0]	Capture Compare Register 1 During capture operation, the trigger for capturing to this register differs according to the ENCAnCTL.ENCAnCTS setting. See the description of the ENCAnCTS bit in ENCA control register ENCAnCTL for details. • If ENCAnCTL.ENCAnCRM1 = 0: ENCAnCCR1 is compare register Set the value to be compared with the timer counter value. • If ENCAnCTL.ENCAnCRM1 = 1: ENCAnCCR1 is capture register The captured timer counter value is stored.

28.3.9 ENCAnCNT — ENCA Counter Register

This register is the 16-bit timer counter register.

Access: This register can be read/written in 16-bit units.
This register can be written only when the operation is stopped.

Address: <ENCAn_base> + 08_H

Value after reset: 0000_H

Bit	15	14	13	12	11	10	9	8	7	6	5	4	3	2	1	0
	ENCAnCNT[15:0]															
Value after reset	0	0	0	0	0	0	0	0	0	0	0	0	0	0	0	0
R/W	R/W	R/W	R/W	R/W	R/W	R/W	R/W	R/W	R/W	R/W	R/W	R/W	R/W	R/W	R/W	R/W

Table 28.17 ENCAnCNT Register Contents

Bit Position	Bit Name	Function
15 to 0	ENCAnCNT [15:0]	Counter Register • ENCAnTE.ENCAnTE status: 0 (initial setting): Count stop An arbitrary value can be set to timer counter. • ENCAnTE.ENCAnTE status: 0 → 1 (operation start)): Count operation start Up/down count operation is started with the set arbitrary value. • ENCAnTE.ENCAnTE status: 1 (operating): Counting Up/down count operation is performed. • ENCAnTE.ENCAnTE status: 1 → 0 (stopped): Count stop The counter value immediately before the operation was stopped is held, and the count operation is stopped.

28.3.10 ENCAnTE — ENCA Timer Enable Status Register

This register indicates the operating status of ENCAn.

Access: This register can only be read in 8-bit units.

Address: <ENCAn_base> + 14_H

Value after reset: 00_H

Bit	7	6	5	4	3	2	1	0
	—	—	—	—	—	—	—	ENCAnTE
Value after reset	0	0	0	0	0	0	0	0
R/W	R	R	R	R	R	R	R	R

Table 28.18 ENCAnTE Register Contents

Bit Position	Bit Name	Function
7 to 1	Reserved	When read, the value after reset is read.
0	ENCAnTE	Timer Status Enable This is a status bit that indicates the operation enabled/stopped status of ENCAn. This bit is cleared to 0 when 1 is written to ENCAnTT.ENCAnTT. This bit is set to 1 when 1 is written to ENCAnTS.ENCAnTS, or when the input signal of ENCAnTSST is set to High level. 0: Operation stopped status 1: Operation enabled status

28.3.11 ENCAnTS — ENCA Timer Start Trigger Register

This register provides the trigger bit for setting the ENCAn to the operation enabled state.

Access: This register can only be written in 8-bit units.
This register always returns 00_H when read.

Address: <ENCAn_base> + 18_H

Value after reset: 00_H

Bit	7	6	5	4	3	2	1	0
	—	—	—	—	—	—	—	ENCAnTS
Value after reset	0	0	0	0	0	0	0	0
R/W	R	R	R	R	R	R	R	W

Table 28.19 ENCAnTS Register Contents

Bit Position	Bit Name	Function
7 to 1	Reserved	When writing, write the value after reset.
0	ENCAnTS	Timer Start Trigger This is the trigger bit that sets the ENCAn to the operation enabled state. 0: Writing is ignored. 1: The ENCAn is set to the operation enabled state by setting ENCAnTE.ENCAnTE = 1.

28.3.12 ENCAnTT — ENCA Timer Stop Trigger Register

This register provides the trigger bit for setting the ENCAn to the operation stopped state.

Access: This register can only be written in 8-bit units.
This register always returns 00_H when read.

Address: <ENCAn_base> + $1C_H$

Value after reset: 00_H

Bit	7	6	5	4	3	2	1	0
	—	—	—	—	—	—	—	ENCAnTT
Value after reset	0	0	0	0	0	0	0	0
R/W	R	R	R	R	R	R	R	W

Table 28.20 ENCAnTT Register Contents

Bit Position	Bit Name	Function
7 to 1	Reserved	When writing, write the value after reset.
0	ENCAnTT	Timer Stop Trigger This is the trigger bit that sets the ENCAn to the operation stopped state. 0: Writing is ignored. 1: Clears ENCAnTE.ENCAnTE to 0, to set the ENCAn to the count operation stopped state.

28.4 Operation

The ENCAn operates the timer counter with counter up/down control and clear control by encoder inputs. The ENCAnCCR0 and ENCAnCCR1 registers can be used as dedicated compare registers or as dedicated capture registers.

28.4.1 Timer Counter Operation

The timer counter operations of the ENCAn are described below.

The figure below shows the operation phases. See the corresponding section with the section number for detailed descriptions on each operation.

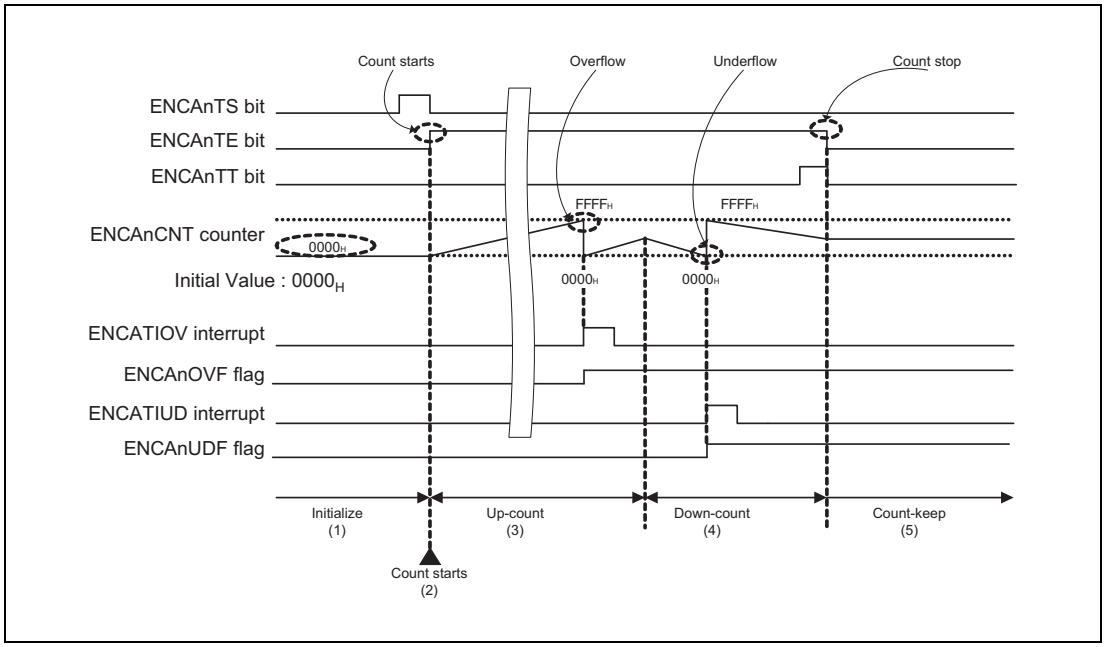

Figure 28.2 Timer Counter Initial Setting Value Setting/Start/Stop

(1) Timer counter initial setting value setting

The initial setting value of the ENCAn counter register (ENCAnCNT) can be set in the counter operation stopped status (ENCAnTE = 0).

(2) Timer counter startup

By writing 1 to the timer start trigger bit (ENCAnTS), the timer status enable bit (ENCAnTE) is set to 1, the count operation is enabled, and counting operation is performed upon detection of the valid edge of the encoder input.

(3) Overflow operation

An overflow occurs when up-counting is performed when the counter value is $FFFF_H$. If the counter value changes from $FFFF_H$ to 0000_H, an overflow interrupt (ENCATIOV) is generated, and the overflow flag (ENCAnOVF) is set to 1. The overflow flag (ENCAnOVF) is cleared to 0 when 1 is set to the overflow flag clear bit (ENCAnCLOV). For details about the operation, see **Section 28.6.1, Overflow Occurrence and Overflow Flag Clear Operation**.

(4) Underflow operation

An underflow occurs when down-counting is performed when the counter value is 0000_H. If the counter value changes from 0000_H to $FFFF_H$, an underflow interrupt (ENCATIUD) is generated, and the underflow flag (ENCAnUDF) is set to 1. The underflow flag (ENCAnUDF) is cleared to 0 when 1 is set to the underflow flag clear bit (ENCAnCLUD). For details about the operation, see **Section 28.6.2, Underflow Occurrence and Underflow Flag Clear Operation**.

(5) Timer counter stop

By writing 1 to the timer stop trigger bit (ENCAnTT), the timer status enable bit (ENCAnTE) is cleared to 0, and the count operation is stopped. At this time, the timer counter is not reset to 0000_H and holds the value before count operation stop.

28.4.2 Up/Down Control of Timer Counter

Up/down control is performed by judging the phase of the encoder inputs (ENCAnE0, ENCAnE1) according to the settings of ENCAnUDS[1:0].

28.4.2.1 When ENCAnUDS[1:0] Bits in ENCAnCTL = 00_B

Table 28.21 When ENCAnUDS[1:0] = 00_B

ENCAnUDS1	ENCAnUDS0	Operation Description		
		ENCAnE0 input	ENCAnE1 input	Counting operation
0	0	Rising edge	High level	Down
		Falling edge		
		Both edges		
		Rising edge	Low level	Up
		Falling edge		
		Both edges		

The valid edge for ENCAnE0 is specified by setting ENCAnEIS[1:0].

"Counting operation" indicates that counting up or down proceeds when the valid edges of the ENCAnE0 signal matches the valid level ENCAnE1 signal.

The following timing chart shows counting operation when ENCAnUDS[1:0] = 00_B.

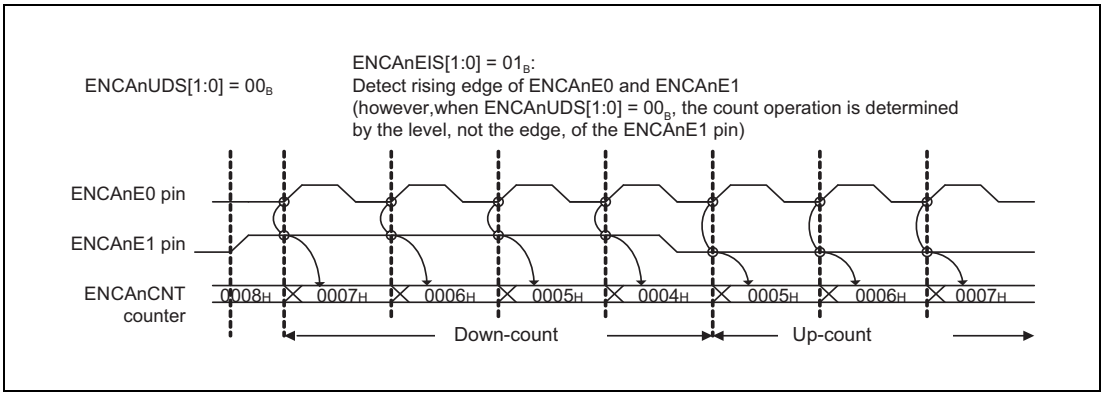

Figure 28.3 Counting Operation when ENCAnUDS[1:0] in ENCAnCTL = 00_B

28.4.2.2 When ENCAnUDS[1:0] Bits in ENCAnCTL = 01_B

Table 28.22 When ENCAnUDS[1:0] = 01_B

ENCAnUDS1	ENCAnUDS0	Operation Description		
		ENCAnE0 input	ENCAnE1 input	Counting operation
0	1	Low level	Rising edge	Down
			Falling edge	
			Both edges	
		High level	Rising edge	
			Falling edge	
			Both edges	
		Rising edge	Low level	Up
		Falling edge		
		Both edges		
		Rising edge	High level	
		Falling edge		
		Both edges		
		Simultaneous input		Hold

The valid edges for ENCAnE0 and ENCAnE1 are specified by setting ENCAnEIS[1:0].

"Counting operation" indicates that counting up or down proceeds when the valid edges and levels of the signals on ENCAnE0 and ENCAnE1 match. When valid edges coincide, the count is retained.

The following timing chart shows counting operation when ENCAnUDS[1:0] = 01_B.

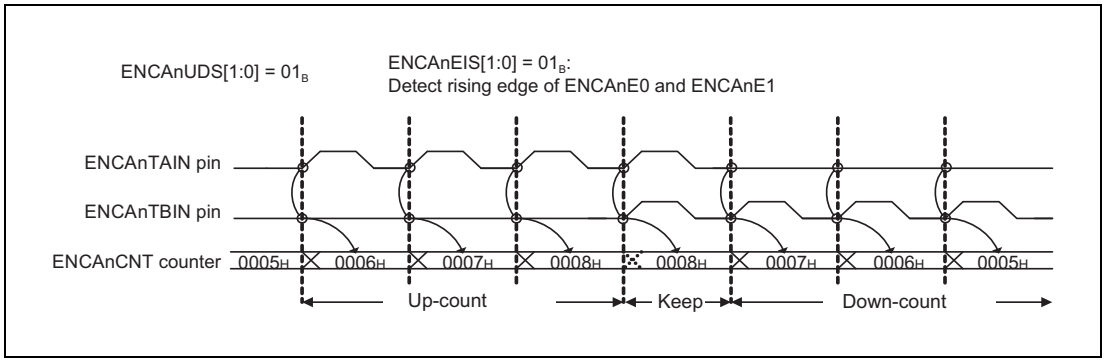

Figure 28.4 Counting Operation when ENCAnUDS[1:0] in ENCAnCTL = 01_B

28.4.2.3 When ENCAnUDS[1:0] Bits in ENCAnCTL = 10_B

Table 28.23 When ENCAnUDS[1:0] = 10_B

ENCAnUDS1	ENCAnUDS0	Operation Description		
		ENCAnE0 input	ENCAnE1 input	Counting operation
1	0	Rising edge	Low level	Down
		Rising edge	Falling edge	
		Falling edge	Low level	Up
		Falling edge	Falling edge	
		Low level	Rising edge	Hold
		Rising edge	Rising edge	
		High level	Rising edge	
		Falling edge	Rising edge	
		Low level	Falling edge	
		Rising edge	High level	
		High level	Falling edge	
		Falling edge	High level	

Valid edge specification for ENCAnE0 and ENCAnE1 (setting to ENCAnEIS[1:0]) is invalid.

The following timing chart shows counting operation when ENCAnUDS[1:0] = 10_B.

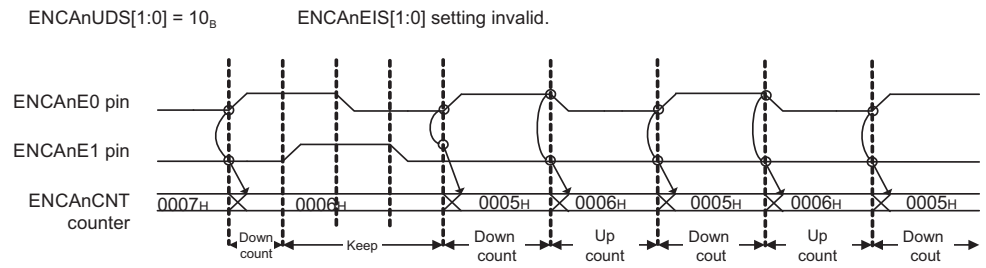

Figure 28.5 Counting Operation when ENCAnUDS[1:0] in ENCAnCTL = 10_B

28.4.2.4 When ENCAnUDS[1:0] Bits in ENCAnCTL = 11_B

Table 28.24 When ENCAnUDS[1:0] = 11_B

ENCAnUDS1	ENCAnUDS0	Operation Description		
		ENCAnE0 input	ENCAnE1 input	Counting operation
1	1	Low level	Falling edge	Down
		Rising edge	Low level	
		High level	Rising edge	
		Falling edge	High level	
		Rising edge	High level	Up
		High level	Falling edge	
		Falling edge	Low level	
		Low level	Rising edge	
		Simultaneous input		Hold

Valid edge specification for ENCAnE0 and ENCAnE1 (settings of ENCAnEIS[1:0]) is invalid.

When the valid edges of the signals on ENCAnE0 and ENCAnE1 coincide, the count is retained.

The following timing chart shows counting operation when ENCAnUDS[1:0] = 11_B

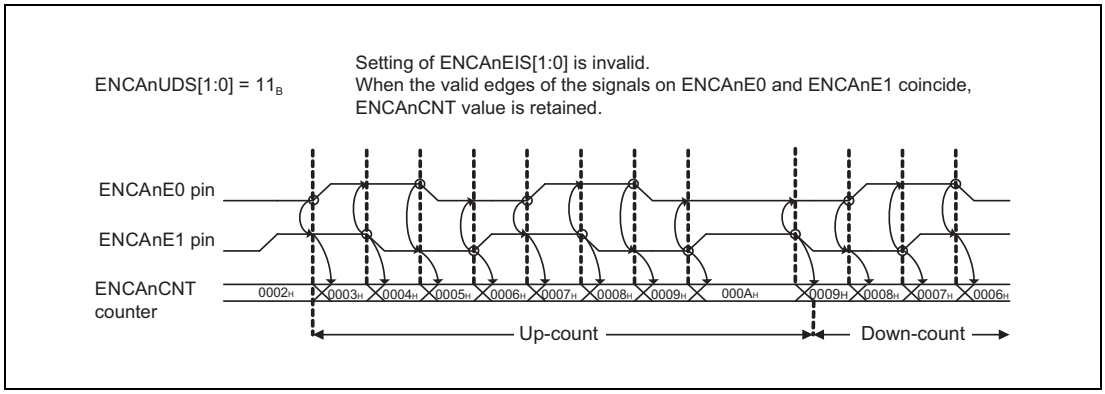

Figure 28.6 Counting Operation when ENCAnUDS[1:0] = 11_B

28.4.3 Timer Counter Clear Control by Encoder Input

The following conditions lead to clearing of the timer counter to 0000_H.

- Detection of a valid edge of the encoder clearing input signal (signal on the ENCAnEC pin)
- Level detection of the encoder input and encoder clearing input signals (signals on the ENCAnE0, ENCAnE1, and ENCAnEC pins)

Two types of clearing methods can be selected by controlling the ENCAnSCE, ENCAnZCL, ENCAnBCL, ENCAnACL, ENCAnECS[1:0] bits of the ENCAnIOC1 register.

Table 28.25 Timer Counter Clear Control by Encoder Input

Clearing method	ENCAnSCE	ENCAnZCL	ENCAnBCL	ENCAnACL	ENCAnECS[1:0]
(1)	0	Invalid	Invalid	Invalid	Valid
(2)	1	Valid	Valid	Valid	Invalid

28.4.3.1 Clearing Method when ENCAnSCE = 0

- Upon detection of the valid edge of ENCAnEC, the timer counter is cleared to 0000_H in synchronization with the operation clock.
- The valid edge of ENCAnEC is specified by the setting of the ENCAnECS[1:0] bits.
- The settings of the ENCAnZCL, ENCAnBCL, and ENCAnACL bits are invalid.
- An encoder clear interrupt request signal (ENCATIEC) is output simultaneously with timer counter clearing.

For details about clear operation when ENCAnSCE = 0, see the timing chart in **Section 28.6.19, Capture Operation Performed upon Clearing by ENCAnEC when ENCAnSCE = 0**.

28.4.3.2 Clearing Method when ENCAnSCE = 1

- When the clear levels of the ENCAnEC, ENCAnE1, and ENCAnE0 inputs are detected, the timer counter is cleared to 0000_H in synchronization with the operating clock.
- Specify the clear levels of the ENCAnEC, ENCAnE1, and ENCAnE0 inputs by the settings of the ENCAnZCL, ENCAnBCL, and ENCAnACL bits.
- The settings of the ENCAnECS[1:0] bits are invalid.
- An encoder clear interrupt request signal (ENCATIEC) is output simultaneously with timer counter clearing.

The clearing conditions of the timer counter according to the ENCAnZCL, ENCAnBCL, and ENCAnACL settings are listed in the table below.

Table 28.26 Clearing Conditions of Timer Counter

Counter Clear Condition Setting			Encoder Input Level		
ENCAnZCL	ENCAnBCL	ENCAnACL	ENCAnEC	ENCAnE1	ENCAnE0
0	0	0	Low	Low	Low
0	0	1	Low	Low	High
0	1	0	Low	High	Low
0	1	1	Low	High	High
1	0	0	High	Low	Low
1	0	1	High	Low	High
1	1	0	High	High	Low
1	1	1	High	High	High

28.4.4 Functions of ENCAnCCR0

28.4.4.1 Compare Function

- When ENCAnCRM0 = 0, the ENCAnCCR0 register functions as a dedicated compare register.
- Upon compare match between the value of the timer counter and the ENCAnCCR0 setting value, a compare 0 match interrupt (ENCATINT0) is output.
- When ENCAnECM0 = 1, the timer counter is cleared to 0000_H in synchronization with the operating clock upon compare match if the next count operation is up-count.

Table 28.27 Compare Function of ENCAnCCR0

ENCAnCCR0 function	Compare match clear control	Next count operation	Timer counter clearing upon compare match with ENCAnCCR0
ENCAnCRM0	ENCAnECM0		
0 (Compare)	0	Up-count	Does not clear (continues count operation).
		Down-count	
	1	Up-count	Clears timer counter to 0000_H.
		Down-count	Does not clear (continues count operation).

When ENCAnLDE = 1

- Upon occurrence of an underflow, the setting value of the ENCAnCCR0 register is loaded to the timer counter.
- An underflow interrupt (ENCATIUD) is output.

NOTE

For the timing chart when ENCAnLDE = 1, see the timing charts in **Section 28.6.8, Using the ENCAnLDE Function Immediately after Startup** and **Section 28.6.12, Up-count after Conflict between ENCAnLDE Function (Loading Counter Value) and Clear Operation by Encoder Clear Input**.

28.4.4.2 Capture Function

- When ENCAnCRM0 = 1, the ENCAnCCR0 register functions as a dedicated capture register.
- Upon valid edge detection of the capture trigger input 0 (ENCAnTTIN0), the value of the timer counter is stored into ENCAnCCR0.
- A capture 0 interrupt (ENCATINT0) is output during capture operation.

NOTE

For details about capture operation to ENCAnCCR0, see the timing charts in **Section 28.6.14, Capture Operation between Count Clocks (ENCAnCCR0)** and **Section 28.6.17, Encoder operation when compare match clear control is disabled**.

28.4.5 Functions of ENCAnCCR1

28.4.5.1 Compare Function

- When ENCAnCRM1 = 0, the ENCAnCCR1 register functions as a dedicated compare register.
- Upon compare match between the value of the timer counter and the ENCAnCCR1 setting value, a compare 1 match interrupt (ENCATINT1) is output.
- When ENCAnECM1 = 1, the timer counter is cleared to 0000_H in synchronization with the operating clock upon compare match if the next count operation is down-count.

Table 28.28 Compare Function of ENCAnCCR1

ENCAnCCR1 function	Compare match clear control	Next count operation	Timer counter clearing upon compare match with ENCAnCCR1.
ENCAnCRM1	ENCAnECM1		
0 (Compare)	0	Up-count	Does not clear (continues count operation).
		Down-count	
	1	Up-count	Does not clear (continues count operation).
		Down-count	Clears timer count to 0000_H.

Compare match interrupt detection mask function

- When ENCAnCME = 1, the compare 1 match interrupt detection mask function is enabled. In this state, the compare 1 match interrupt is output upon the first match of the value of the timer counter and the ENCAnCCR1 setting value, and interrupts are then masked for the second and subsequent compare matches.
- When ENCAnMCS = 0, the compare 1 match interrupt detection mask function is disabled by a write operation to the ENCAnCCR1 register.
- When ENCAnMCS = 1, the compare 1 match interrupt detection mask function is disabled by a timer counter clear operation accompanying phase Z or by a timer counter clear operation upon match between the ENCAnCCR0 register value and the timer counter value.
- When ENCAnMCS = 1 and ENCAnLDE = 1, the compare 1 match interrupt detection mask function is disabled by a loading operation of the ENCAnCCR0 register to the timer counter upon underflow detection.
- Setting ENCAnECM1 to 1 is prohibited when enabling the compare 1 match interrupt detection mask function.

Table 28.29 Compare Match Interrupt Detection Mask Function

ENCAnCCR1 function	Compare 1 match interrupt mask	Interrupt mask cancel trigger		Compare 1 match interrupt output upon compare match with ENCAnCCR1
ENCAnCRM1	ENCAnCME	ENCAnMCS	Underflow occurrence upon ENCAnLDE = 1	
0 (Compare)	0 (Mask function disabled)	(Setting invalid)	—	Outputs compare 1 match interrupt upon each compare match.
	1 (Mask function enabled)	0 (Write operation to ENCAnCCR1)	Occurred (Loading of ENCAnCCR0 to timer counter)	Outputs compare 1 match interrupt once upon the first compare match. (Interrupts are masked for the second and subsequent matches until the cancel trigger occurs.)
		1 (Timer counter clear operation)		

28.4.5.2 Capture Function

When ENCAnCRM1 = 1, the ENCAnCCR1 register functions as a dedicated capture register.

NOTE

For details about capture operation to ENCAnCCR1, see the timing chart in **Section 28.6.13, Capture Operation between Count Clocks (ENCAnCCR1)**.

The operations for each of the ENCAnCTS settings are shown in the table below.

Table 28.30 Operations for each of the ENCAnCTS settings

ENCAnCCR1 function	Capture trigger selection			
ENCAnCRM1	**ENCAnCTS**	**Capture trigger signal**	**Timer counter clearing**	**Interrupt occurrence**
1 (Capture)	0	Capture trigger 1 input (ENCAnTTIN1)	Does not clear timer counter.	(1) Capture 1 interrupt (ENCATINT1)
	1	Encoder clear input (specified by ENCAnSCE)	Clears timer counter.	(1) Capture 1 interrupt (ENCATINT1) (2) Encoder clear interrupt (ENCATIEC)

NOTE

For details about the timing chart when ENCAnCTS = 0 or ENCAnCTS = 1, see the following:

Section 28.6.3, Count Clear and Capture Operation by Encoder Clear Input (ENCAnEC pin), **Section 28.6.4, Conflict between Overflow Occurrence and Clear Operation by Encoder Clear Input (ENCAnEC Pin)**, **Section 28.6.5, Conflict between Underflow Occurrence and Clear Operation by Encoder Clear Input (ENCAnEC Pin)**, **Section 28.6.11, Conflict between ENCAnLDE Function (Loading Counter Value) and Clear Operation by Encoder Clear Input** and **Section 28.6.12, Up-count after Conflict between ENCAnLDE Function (Loading Counter Value) and Clear Operation by Encoder Clear Input**.

28.4.5.3 Timer Counter Clearing upon Compare Register Match

Timer counter clearing upon compare match between the value of the timer counter and the ENCAnCCR0/ENCAnCCR1 setting value, according to the settings of the ENCAnECM1 and ENCAnECM0 bits in the ENCAnCTL register, is detailed in the following table.

Table 28.31 Timer Counter Clearing Operation upon Compare Register Match

ENCAnECM1 and ENCAnECM0	Next count operation	Timer counter clearing upon compare match with ENCAnCCR1	Timer counter clearing upon compare match with ENCAnCCR0
00	Up-count	Does not clear (continues count operation).	Does not clear (continues count operation).
	Down-count	Does not clear (continues count operation).	Does not clear (continues count operation).
01	Up-count	Does not clear (continues count operation).	Clears timer counter to 0000_H.
	Down-count	Does not clear (continues count operation).	Does not clear (continues count operation).
10	Up-count	Does not clear (continues count operation).	Does not clear (continues count operation).
	Down-count	Clears timer counter to 0000_H.	Does not clear (continues count operation).
11	Up-count	Does not clear (continues count operation).	Clears timer counter to 0000_H.
	Down-count	Clears timer counter to 0000_H.	Does not clear (continues count operation).

28.4.6 Startup/Stop of Timer Counter

28.4.6.1 Startup of Timer

The timer operation can be started by setting the ENCAnTS bit to 1. Simultaneous start with other timer can be possible by setting the PIC. For details, see Section 29.2.3.1, Simultaneous Start Trigger Function

28.4.6.2 Stop of Timer

When the ENCAnTT bit is set to 1, the ENCAnTE bit becomes 0 and the timer stops.

28.5 ENCA Setting Sequences

28.5.1 Encoder timer setting procedure

The encoder timer setting procedure is described below.

Table 28.32 Encoder Timer Setting Procedure

	Action	Setting status
Initial Setting	Reset release	Power-on status, operation stopped status (Writing to each register is enabled)
ENCAn initial Settings	Perform the following initial settings. • Setting for counter • Setting for counter clear • Setting for ENCAnCCR0 register • Setting for ENCAnCCR1 register	This is the count operation stopped status. The value of the ENCAnTE bit indicating the operating status is 0.
	Perform the counter initial value settings. • Set any 16-bit value to ENCAnCNT register. (When, after setting this register, the ENCAnTS bit is set to 1, the counter operation starts from the set count value.)	The set value is set as the initial value of the counter register value.
Operation Start	Perform the counter operation start setting. • Set the ENCAnTS bit to 1.	This is the counter operation start status. The value of the ENCAnTE bit indicating the operating status is 1, and the count clock is supplied to the internal circuit.
Operating	Only those registers whose setting can be changed during operation can be rewritten. • ENCAnCCR0 register setting • ENCAnCCR1 register setting • ENCAnIOC0 register setting	The count operation set with the initial setting is performed, and up/down counting is performed according to the ENCAnE0 and ENCAnE1 pins.
Operation Stop	Perform the counter operation stop setting during operation. • Set the ENCAnTT bit to 1.	This is the counter operation stopped status. The value of the ENCAnTE bit indicating the operating status is 0.
ENCA stop	Reset	The setting registers are initialized.

28.5.1.1 Initial Setting Procedure for Counter

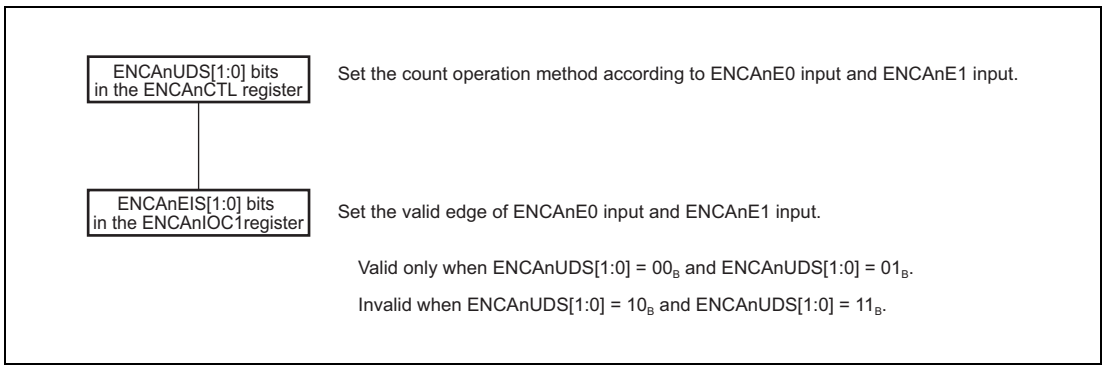

Figure 28.7 Initial Setting Procedure for Counter

28.5.1.2 Initial Setting Procedure for Counter Clear

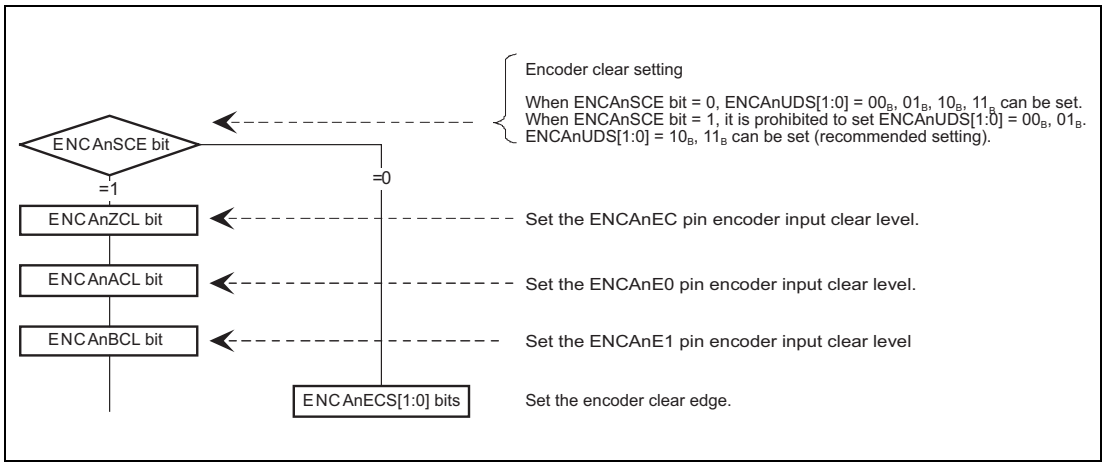

Figure 28.8 Initial Setting Procedure for Counter Clear

28.5.1.3 Setting Procedure for ENCAnCCR0 Register

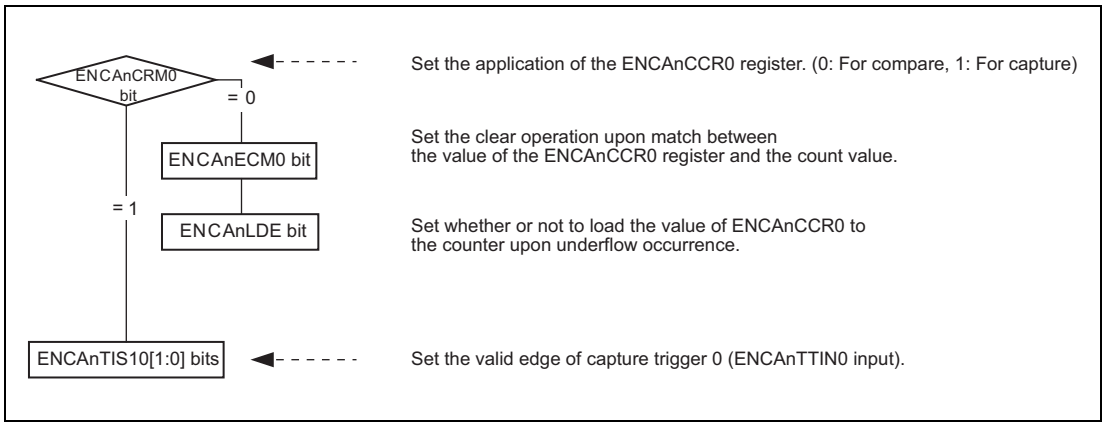

Figure 28.9 Setting Procedure for ENCAnCCR0 register

28.5.1.4 Setting Procedure for ENCAnCCR1 Register

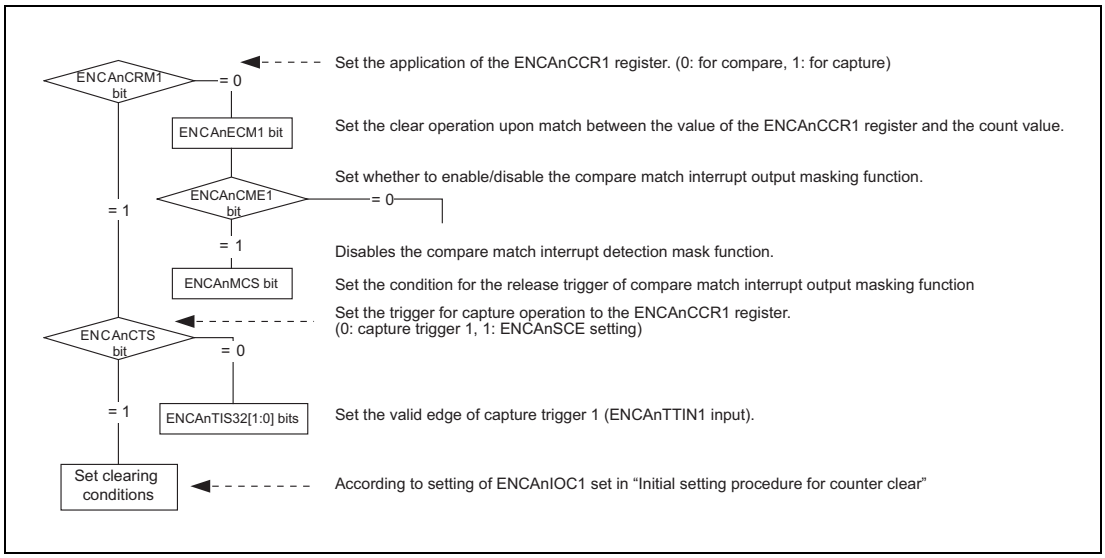

Figure 28.10 Setting Procedure for ENCAnCCR1 Register

28.6 Timing Chart

28.6.1 Overflow Occurrence and Overflow Flag Clear Operation

When an up-counting is performed while the counter value is $FFFF_H$, an overflow occurs. If an overflow occurs, an overflow interrupt (ENCATIOV) is output and the overflow flag (ENCAnOVF) is set to 1. The overflow flag clear bit (ENCAnCLOV) is set to 1, the overflow flag (ENCAnOVF) is cleared to 0.

The overflow occurrence and overflow flag clear operation are described as follows.

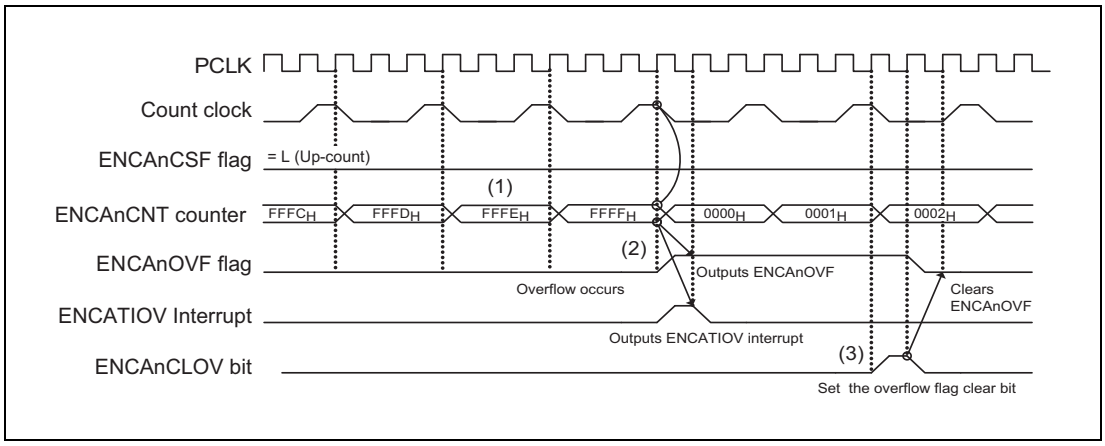

Figure 28.11 Overflow Occurrence and Overflow Flag Clear Setting

(1) The count value is up-counted from $FFFE_H$ to $FFFF_H$.

(2) When the count value changes from $FFFF_H$ to 0000_H, an overflow occurs. At the same time, an overflow interrupt is output, and the overflow flag is set to 1.

(3) An overflow flag is cleared to 0 by setting 1 to the ENCAnCLOV bit in the ENCAnFGC register according to the clearing procedure. In addition, an overflow flag is also cleared by setting the ENCAnTS bit in the ENCAnTS register to 1 while ENCAnTE.ENCAnTE is 0, or by setting an input signal of the ENCAnTSST (simultaneous start trigger input) to high.

28.6.2 Underflow Occurrence and Underflow Flag Clear Operation

When an down-counting is performed while the counter value is 0000_H, an underflow occurs. If an underflow occurs, an underflow interrupt (ENCATIUD) is output and the underflow flag (ENCAnUDF) is set to 1. The underflow flag clear bit (ENCAnCLUD) is set to 1, the underflow flag (ENCAnUDF) is cleared to 0.

The underflow occurrence and underflow flag clear operation are described as follows.

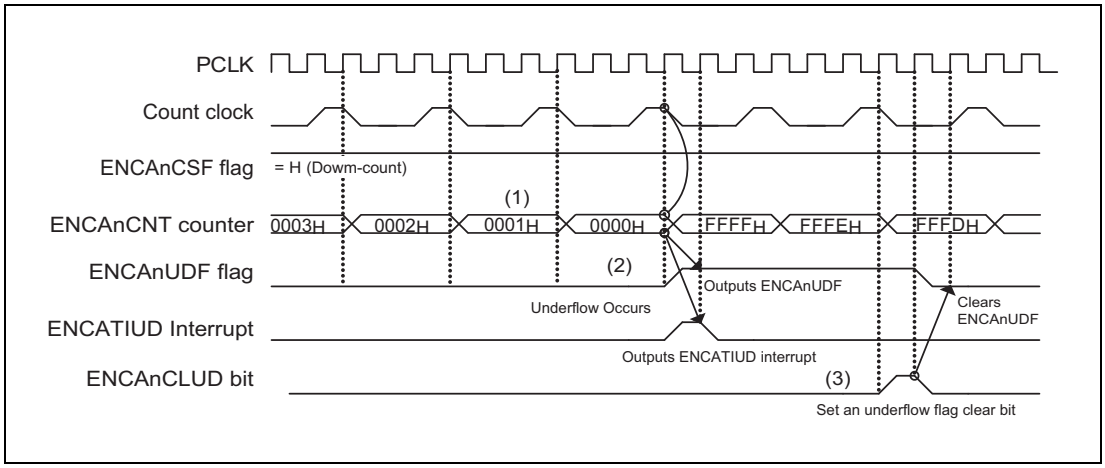

Figure 28.12 Underflow Occurrence and Underflow Flag Clear Setting

(1) The count value is down-counted from 0001_H to 0000_H.

(2) When the count value changes from 0000_H to $FFFF_H$, an underflow occurs. At the same time, an underflow interrupt is output, and the underflow flag is set to 1.

(3) An underflow flag is cleared to 0 by setting 1 to the ENCAnCLUD bit in the ENCAnFGC register according to the clearing procedure. In addition, an underflow flag is also cleared by setting the ENCAnTS bit in the ENCAnTS to 1 while ENCAnTE.ENCAnTE is 0, or by setting an input signal of the ENCAnTSST (simultaneous start trigger input) to high.

28.6.3 Count Clear and Capture Operation by Encoder Clear Input (ENCAnEC pin)

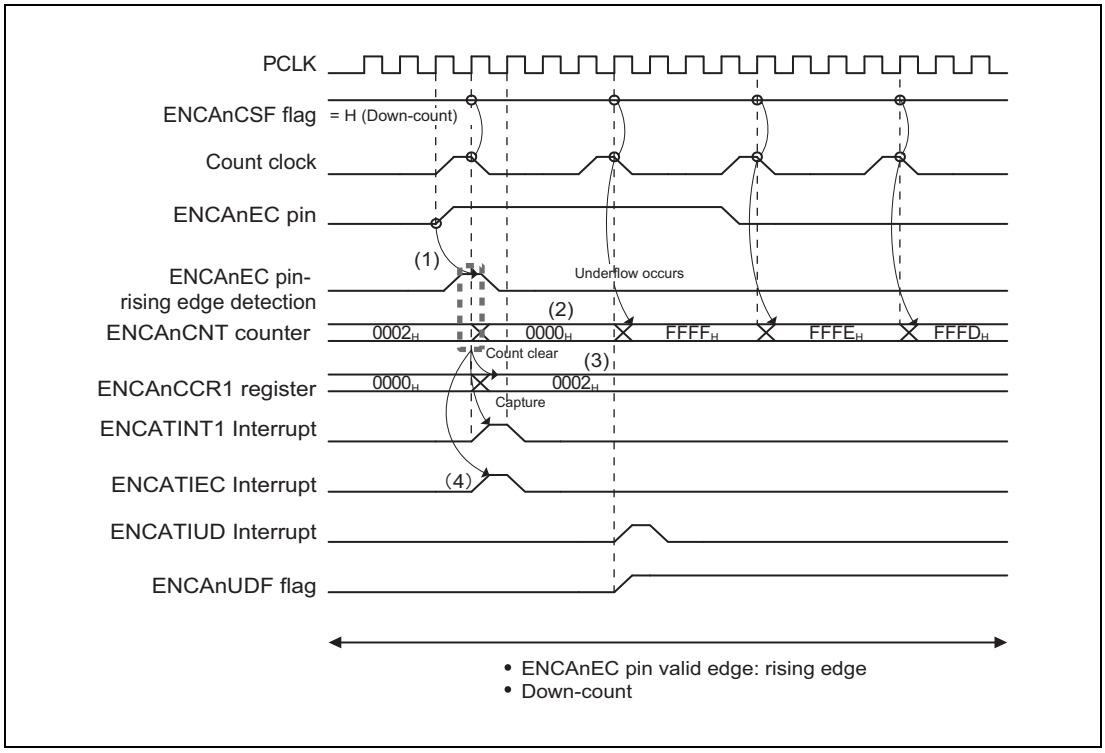

Figure 28.13 Timing Diagram of Count Clear and Capture Operation by Encoder Clear Input (ENCAnEC pin)

[Setting Conditions]

- ENCAnCTL.ENCAnCRM1 = 1
  (ENCAnCCR1 register is selected as capture)
- ENCAnCTL.ENCAnCTS = 1
  (ENCAnEC pin input is selected as a capture trigger input)
- ENCAnIOC1.ENCAnECS[1:0] bits = 01_B
  (Selected as a rising edge detection of the ENCAnEC pin input)

(1) Capture operation is performed by the rising edge of the ENCAnEC pin trigger.

(2) Clear operation is performed by an input to the ENCAnEC pin and the count value is reset to 0000_H.

(3) The counter value (0002_H) is captured to the ENCAnCCR1 at the rising edge of the ENCAnEC pin.

(4) At the same time, by the ENCAnEC pin input, a clear interrupt (ENCATIEC) and capture interrupt (ENCATINT1) are output.

28.6.4 Conflict between Overflow Occurrence and Clear Operation by Encoder Clear Input (ENCAnEC Pin)

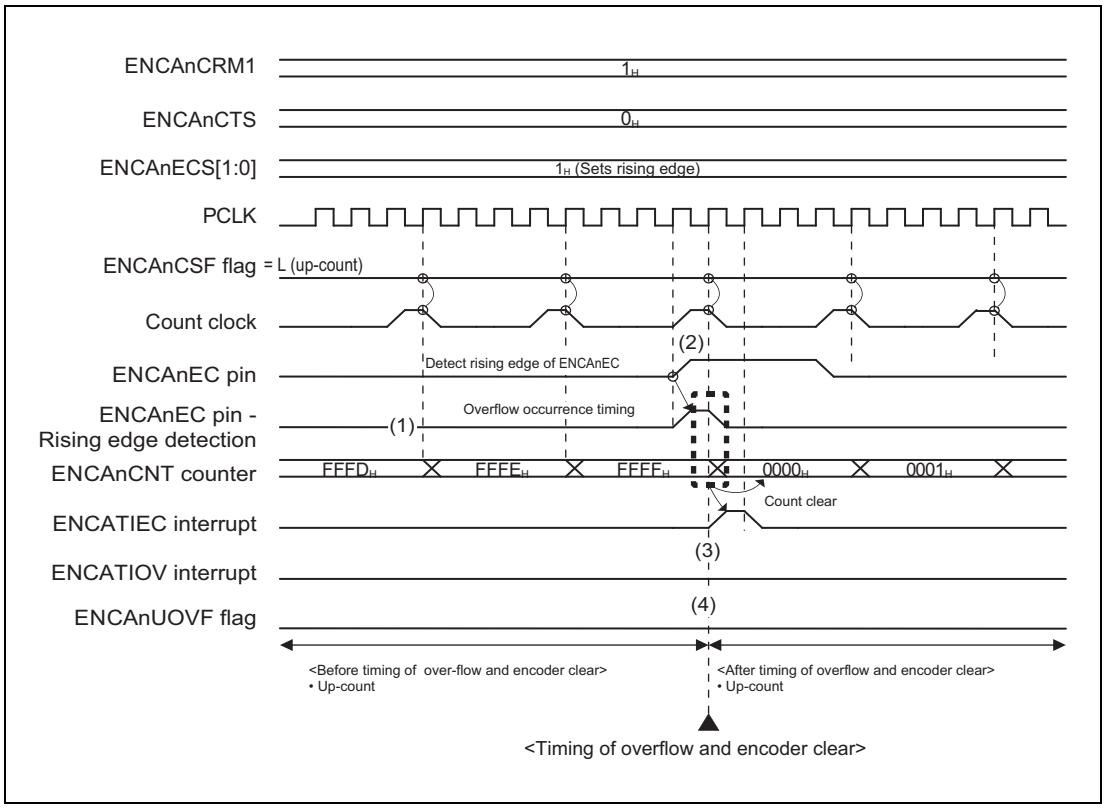

Figure 28.14 Conflict between Overflow Occurrence and Clear Operation by Encoder Clear Input (ENCAnEC pin)

(1) An up-count from $FFFD_H$ is continuously performed.

(2) When an overflow occurs if the count value is $FFFF_H$, and the rising edge of ENCAnEC is detected simultaneously, clear operation by the encoder clear input is performed. The counter value is cleared to 0000_H.

(3) When the counter value is cleared by the encoder clear input, a clear interrupt (ENCATIEC) by encoder clear input is output simultaneously. Because a clear operation by the phase Z input is performed simultaneously with the overflow occurrence, an overflow interrupt is not output (An overflow does not occur. Clear operation is performed by the phase Z input).

(4) Because an overflow does not occur as is the case with step 3, the overflow flag is not set.

28.6.5 Conflict between Underflow Occurrence and Clear Operation by Encoder Clear Input (ENCAnEC Pin)

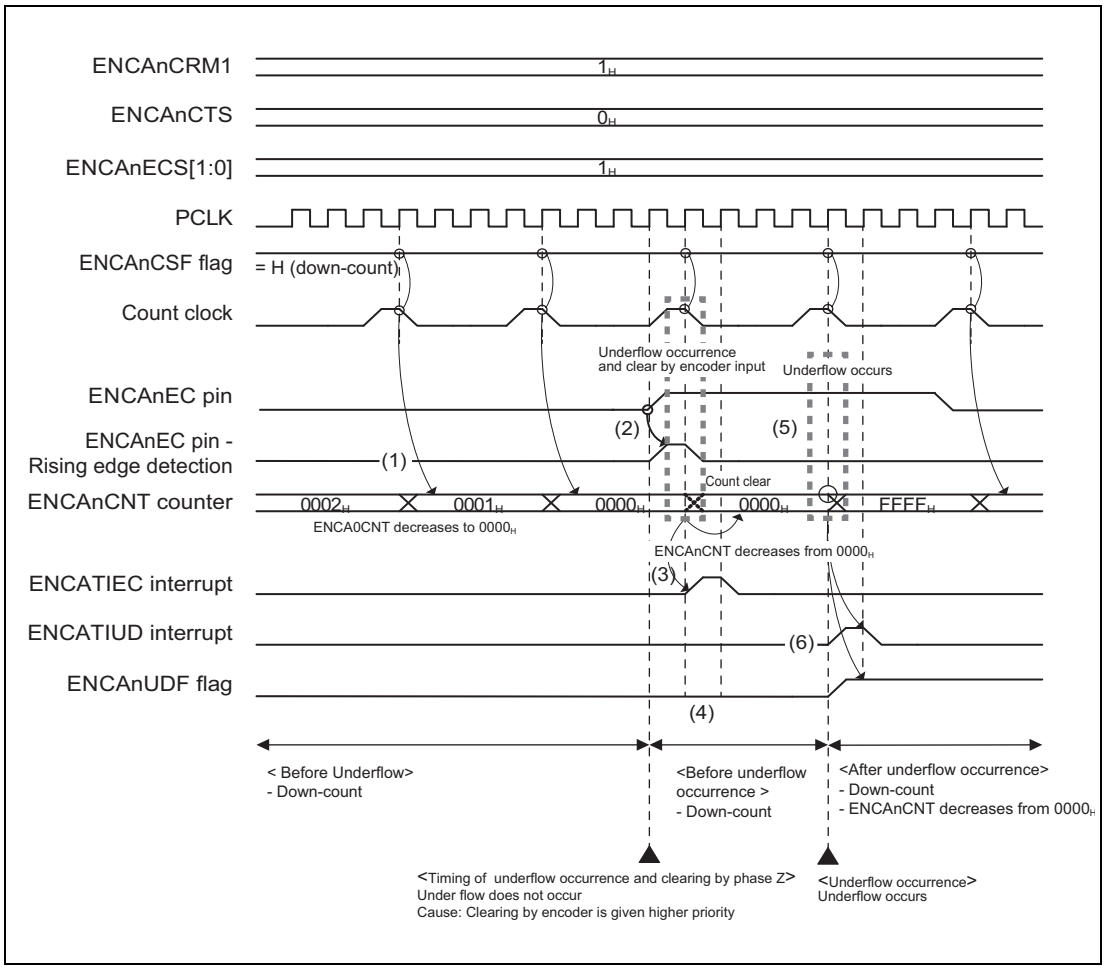

Figure 28.15 Conflict between Underflow Occurrence and Clear Operation by Encoder Clear Input (ENCAnEC Pin)

(1) A down-count from 0002_H is continuously performed.

(2) When an underflow occurs if the count value is 0000_H, and the rising edge of ENCAnEC is detected simultaneously, clear operation by the encoder clear input is performed. Even if the next clock signal is input during clear operation, the counter value remains at 0000_H.

(3) When the counter value is cleared by the encoder clear input, an encoder clear interrupt (ENCATIEC) is output simultaneously. Because a clear operation by the encoder clear input is performed simultaneously with the underflow occurrence, an underflow interrupt is not output (An underflow does not occur. Clear operation is performed by the encoder clear input).

(4) Because an underflow does not occur as is the case with step 3, the underflow flag is not set.

(5) When a further down-count is performed after the counter value changes to 0000_H by clear operation by the encoder clear input, the counter value changes from 0000_H to $FFFF_H$, and an underflow occurs.

(6) When an underflow occurs, an underflow interrupt (ENCATIUD) is output, and the underflow flag (ENCAnUDF) is set.

28.6.6 Overflow Operation Immediately after Startup

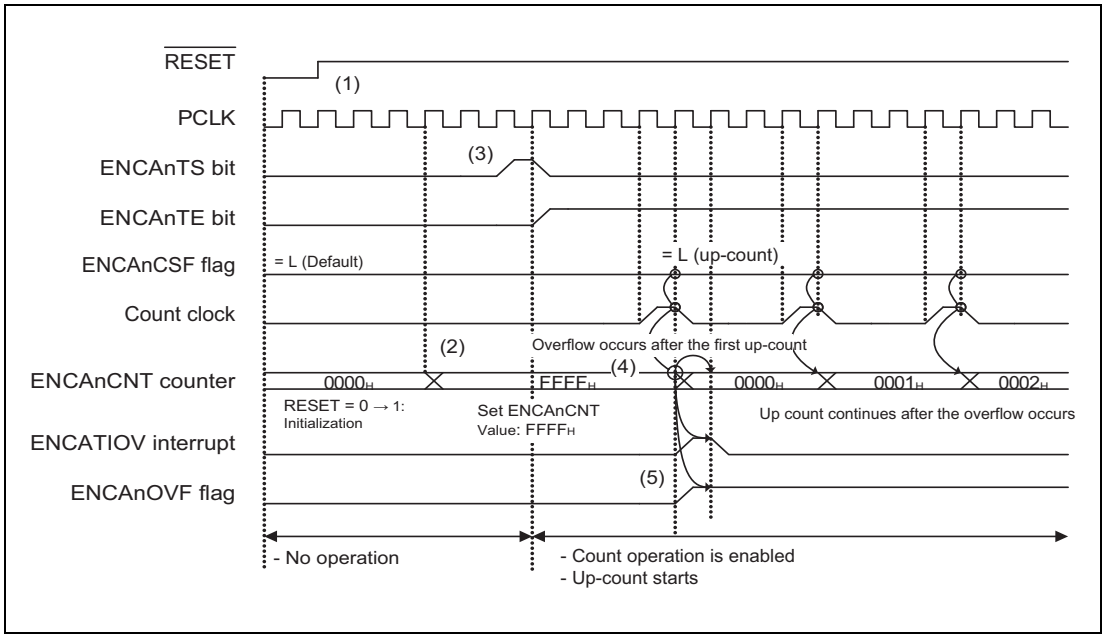

Figure 28.16 Overflow Operation Immediately after Startup

(1) When the $\overline{\text{RESET}}$ value changes from 0 to 1, the status is changes from “reset” to “reset release”.

(2) The timer counter is set to $FFFF_H$ as the initial value.

(3) ENCAnTS is set to 1, and operation starts. ENCAnTE changes to 1, which indicates that operation is enabled.

(4) When an up-count is performed from $FFFF_H$ which is the initially set count value, the counter value changes from $FFFF_H$ to 0000_H, and an overflow occurs immediately after operation starts.

(5) At the same time, by an overflow occurrence immediately after operation starts, an overflow interrupt (ENCATIOV) is output, and the overflow flag (ENCAnOVF) is set.

28.6.7 Underflow Operation Immediately after Startup

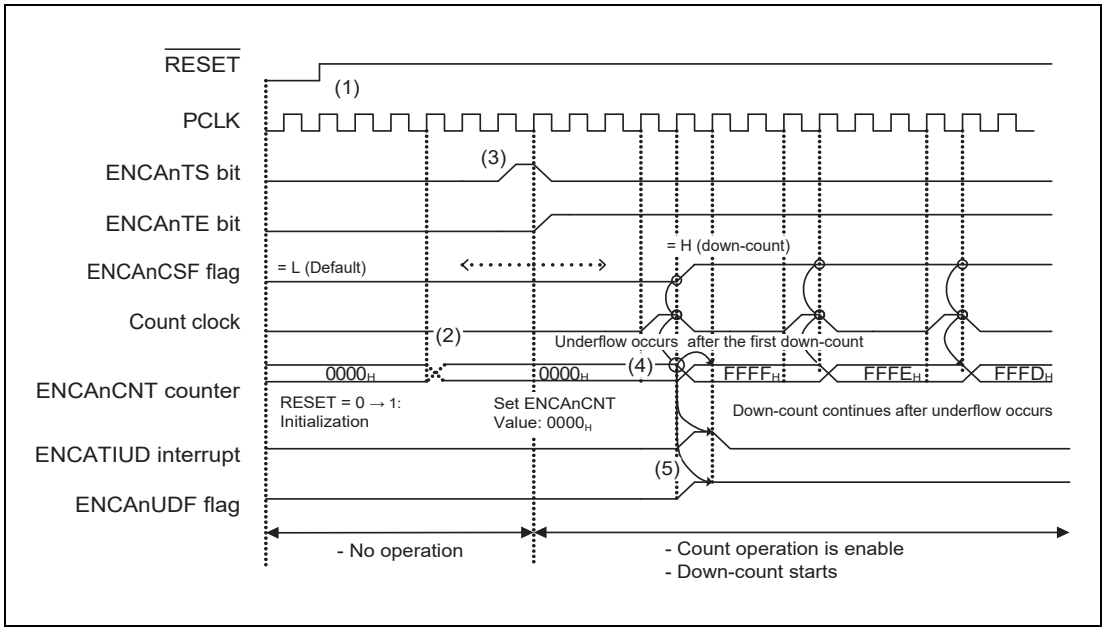

Figure 28.17 Underflow Operation Immediately after Startup

(1) When the $\overline{\text{RESET}}$ value changes from 0 to 1, the status is changes from “reset” to “reset release”.

(2) The timer counter is set to 0000_H as the initial value.

(3) ENCAnTS is set to 1, and operation starts. ENCAnTE changes to 1, which indicates that operation is enabled.

(4) When a down-count is performed from 0000_H which is the initially set count value, the counter value changes from 0000_H to $FFFF_H$, and an underflow occurs immediately after operation starts.

(5) At the same time, by an underflow occurrence immediately after operation starts, an underflow interrupt (ENCATIUD) is output, and the underflow flag (ENCAnUDF) is set.

28.6.8 Using the ENCAnLDE Function Immediately after Startup

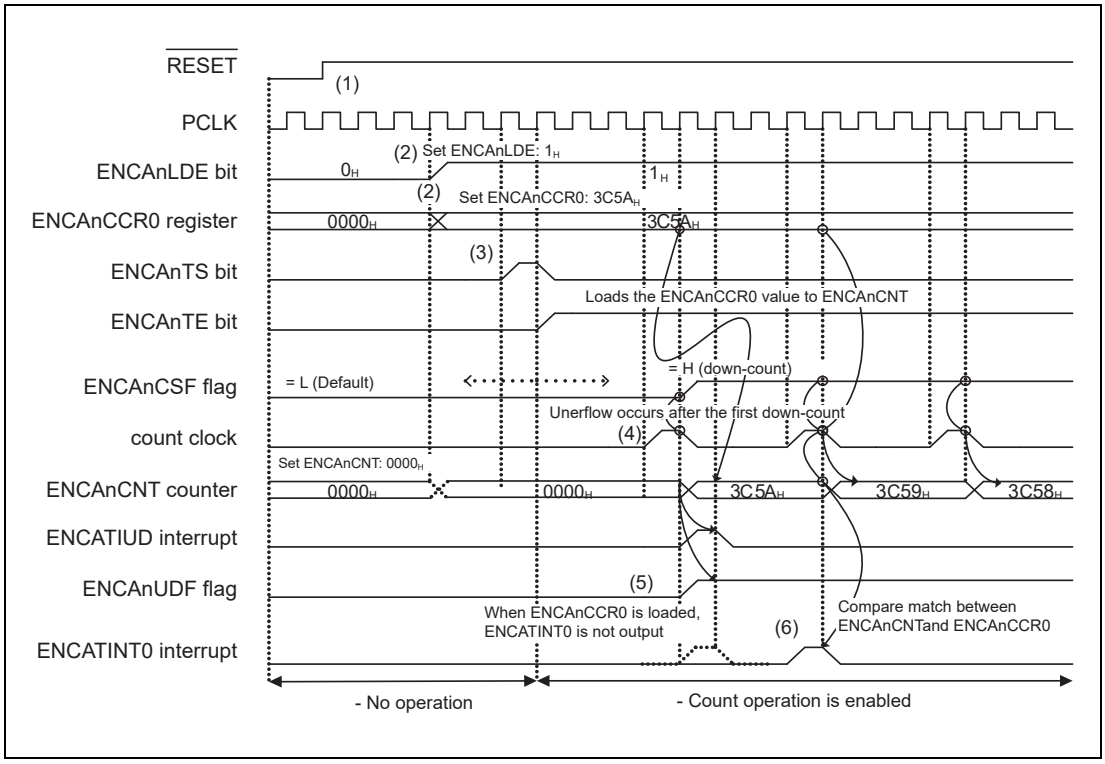

Figure 28.18 Using the ENCAnLDE Function Immediately after Startup

(1) When the $\overline{\text{RESET}}$ value changes from 0 to 1, the status is changes from “reset” to “reset release”.

(2) The load enable bit (ENCAnLDE) is set to 1, capture/compare register 0 (ENCAnCCR0) is set to $3C5A_H$, and the timer counter is set to the initial value 0000_H.

(3) ENCAnTS is set to 1, and operation starts. ENCAnTE changes to 1, which indicates that operation is enabled.

(4) When a down-count is performed from 0000_H which is the initially set count value, an underflow occurs immediately after operation starts. Because ENCAnLDE is set to 1, the ENCAnCCR0 value, $3C5A_H$, is loaded to the timer counter (ENCATINT0 is not output during loading).

(5) At the same time, by an underflow occurrence immediately after operation starts, an underflow interrupt (ENCATIUD) is output, and the underflow flag (ENCAnUDF) is set (After an underflow occurs, down-count operation from the loaded value ($3C5A_H$) continues).

(6) After the ENCAnCCR0 value is loaded to ENCAnCNT, a match with ENCAnCCR0 is detected, and ENCATINT0 is output.

28.6.9 ENCAnLDE Function (Loading Count Value)

(1) <When ENCAnLDE = 0>

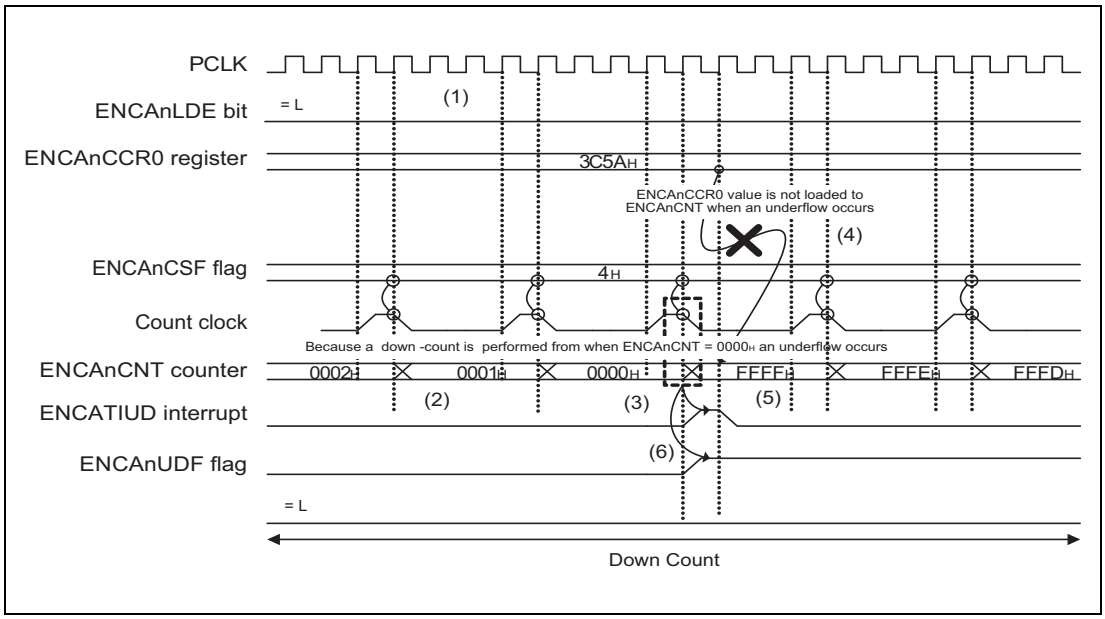

Figure 28.19 ENCAnLDE Function (when ENCAnLDE = 0)

(1) ENCAnLDE is set to 0 (even if an underflow occurs, the ENCAnCCR0 value is not loaded).

(2) A down-count is performed: $0002_H \rightarrow 0001_H \rightarrow 0000_H$

(3) When a further down-count is performed after the counter value changes to 0000_H, an underflow occurs.

(4) Because ENCAnLDE is set to 0, the setting value of the ENCAnCCR0 register is not loaded to the counter even if an underflow occurs.

(5) Operation changes to underflow operation (counter value: $0000_H \rightarrow FFFF_H$).

(6) An underflow interrupt (ENCATIUD) is output, and the underflow flag (ENCAnUDF) is set.

(2) <When ENCAnLDE = 1>

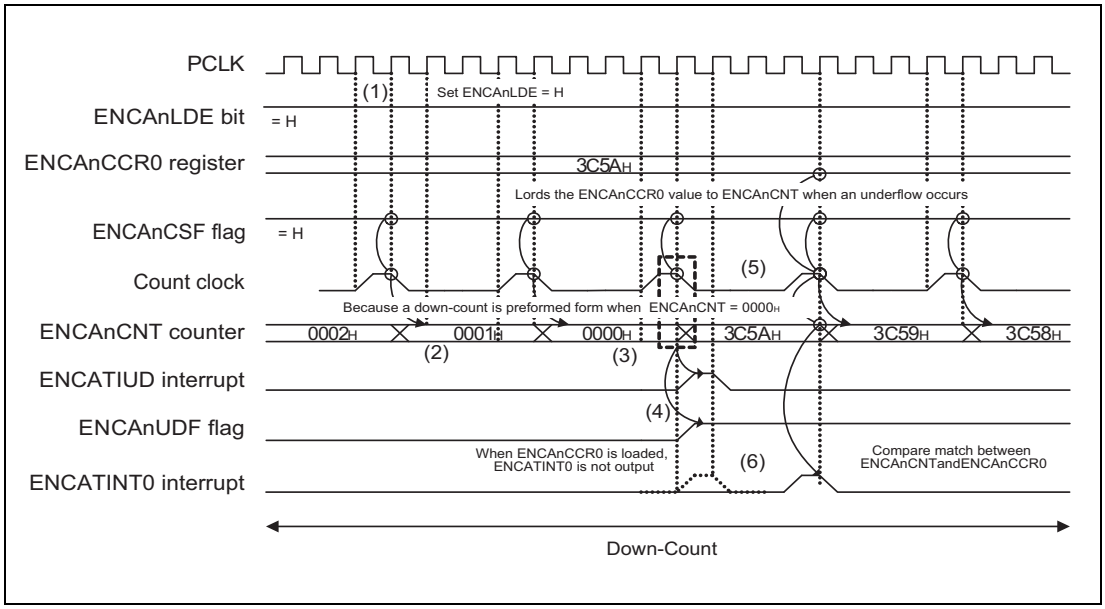

Figure 28.20 ENCAnLDE Function (when ENCAnLDE = 1)

(1) ENCAnLDE is set to 1 (if an underflow occurs, the ENCAnCCR0 value is loaded to the counter).

(2) A down-count is performed: $0002_H \rightarrow 0001_H \rightarrow 0000_H$

(3) When a further down-count is performed after the counter value changes to 0000_H, an underflow occurs.

(4) An underflow interrupt is output, and the underflow flag is set.

(5) Because ENCAnLDE is set to 1, the setting value of the ENCAnCCR0 register is loaded to the counter if an underflow occurs. ENCAnCNT is set to $3C5A_H$.

(6) After the ENCAnCCR0 value is set to ENCAnCNT, if the ENCAnCNT value matches with the ENCAnCCR0 value on a count clock, a compare match interrupt (ENCATINT0) is output.

28.6.10 Conflict between ENCAnLDE Function (Loading Counter Value) and Rewrite of ENCAnCCR0 Register

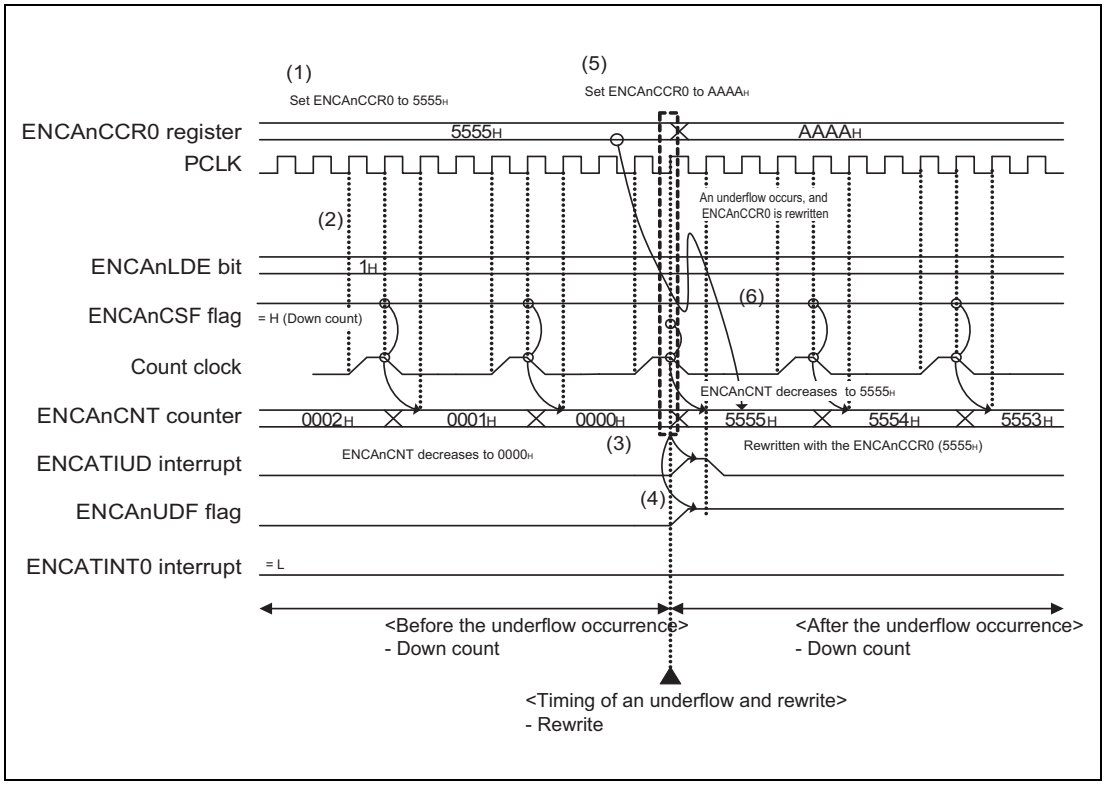

Figure 28.21 Conflict between ENCAnLDE Function and Rewrite of ENCAnCCR0 Register

(1) The ENCAnCCR0 register is currently set to 5555_H.

(2) ENCAnLDE is currently set to 1.

(3) A down-count is performed ($0002_H \rightarrow 0001_H \rightarrow 0000_H$), and an underflow occurs.

(4) An underflow interrupt is output, and the underflow flag is set.

(5) When an underflow occurs, the ENCAnCCR0 register value is changed from 5555_H to $AAAA_H$.

(6) When an underflow occurs, the ENCAnCCR0 value before the rewrite was performed (5555_H) is set in ENCAnCNT.

28.6.11 Conflict between ENCAnLDE Function (Loading Counter Value) and Clear Operation by Encoder Clear Input

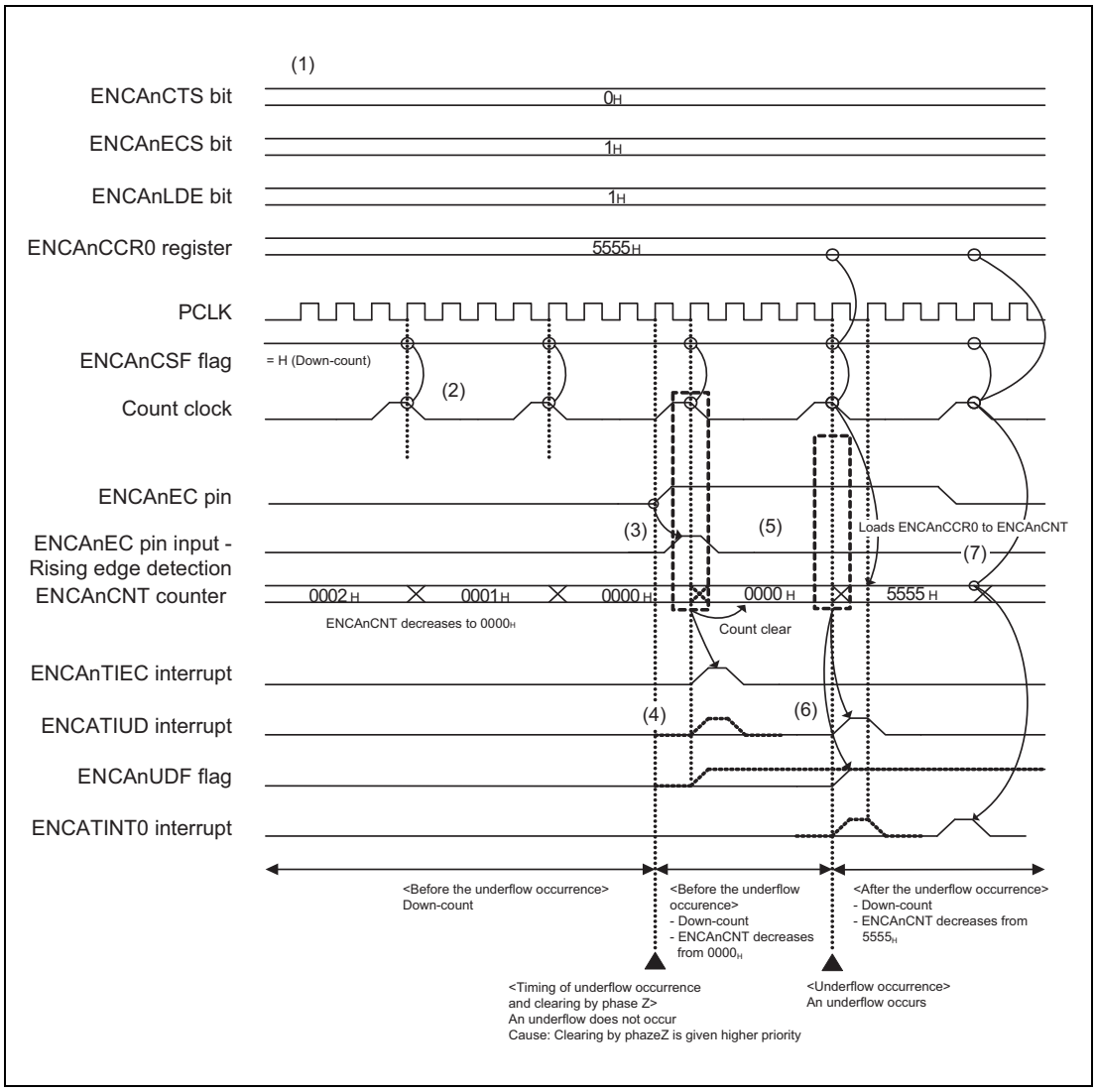

Figure 28.22 Conflict between ENCAnLDE Function and Clear Operation by Encoder Clear Input

(1) The values are set as follows: ENCAnCTS = 0, ENCAnECS1 and ENCAnECS0 = 01_B, ENCAnLDE = 1, and ENCAnCCR0 = 5555_H.

(2) A down-count is performed: $0002_H \rightarrow 0001_H \rightarrow 0000_H$

(3) When the count value becomes 0000_H, the rising edge of ENCAnEC is detected, and clear operation by the encoder clear input is performed.

(4) Because a count clear is performed when the count value reaches 0000_H, a counter clear interrupt (ENCATIEC) by the encoder clear input is output. An underflow does not occur because a down-count is not performed when the count value is 0000_H. Therefore, an underflow interrupt (ENCAIUD) is not output, and the underflow flag (ENCAnUDF) is not set.

(5) After the count value is cleared to 0000_H by clear operation by the encoder clear input, a down-count is performed and an underflow occurs.

(6) An underflow interrupt (ENCATIUD) is output, and the underflow flag (ENCAnUDF) is set.

(7) Because ENCAnLDE = 1, if an underflow occurs, the ENCAnCCR0 value is loaded to ENCAnCNT.

(8) After the ENCAnCCR0 value is set to ENCAnCNT, a compare match is detected according to the count clock. If the ENCAnCNT value matches with the ENCAnCCR0 value, a compare match interrupt (ENCATINT0) is output.

28.6.12 Up-count after Conflict between ENCAnLDE Function (Loading Counter Value) and Clear Operation by Encoder Clear Input

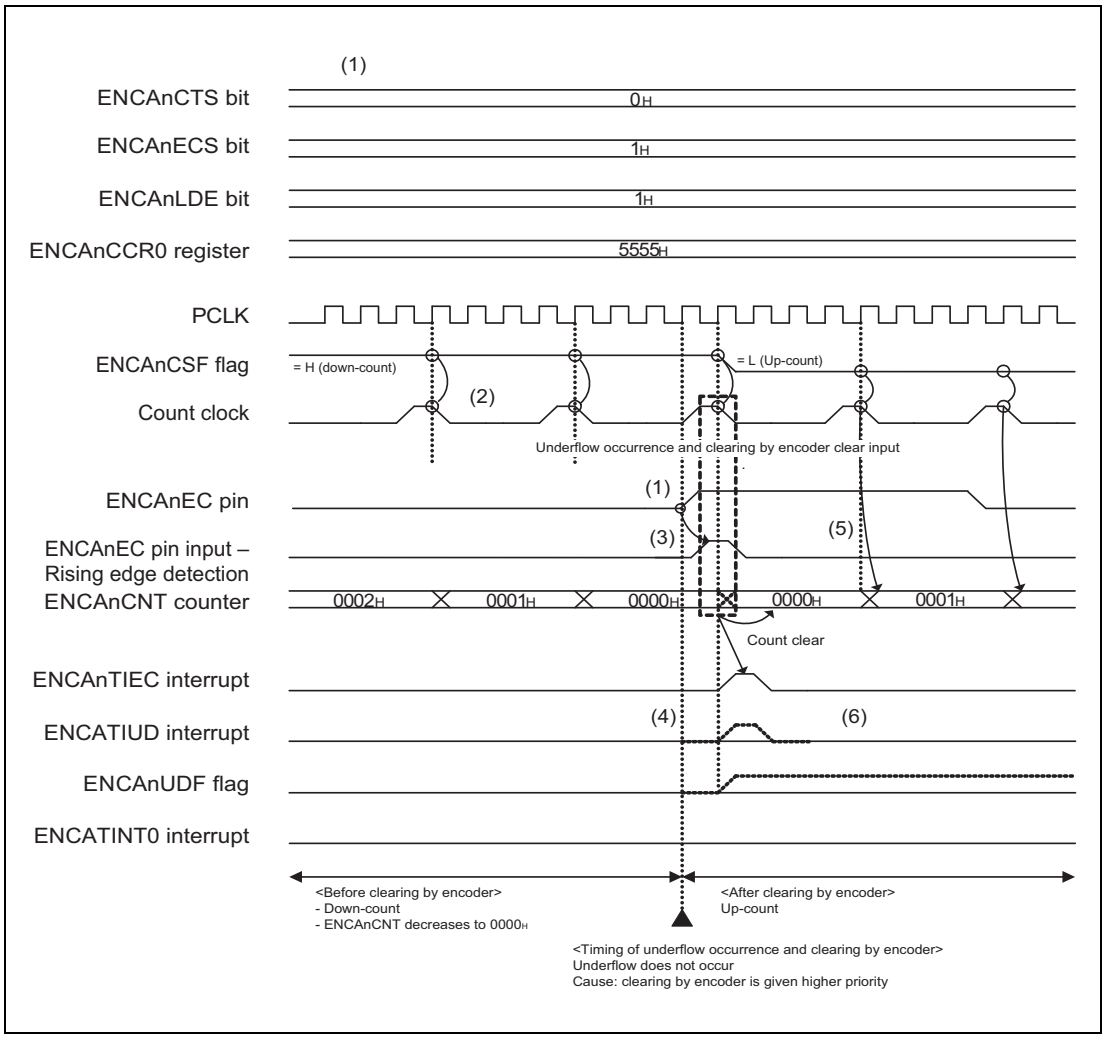

Figure 28.23 Up-count after Conflict between ENCAnLDE Function and Clear Operation by Encoder Clear Input

(1) The values are set as follows: ENCAnCTS = 0, ENCAnECS1 and ENCAnECS0 = 01_B, ENCAnLDE = 1, and ENCAnCCR0 = 5555_H.

(2) A down-count is performed: $0002_H \rightarrow 0001_H \rightarrow 0000_H$

(3) When the count value becomes 0000_H, the rising edge of ENCAnEC is detected, and clear operation by the encoder clear input is performed.

(4) Because a count clear is performed when the count value reaches 0000_H, a counter clear interrupt (ENCATIEC) by the encoder clear input is output. An underflow does not occur because a down-count is not performed when the count value is 0000_H. Therefore, an underflow interrupt (ENCAIUD) is not output, and the underflow flag (ENCAnUDF) is not set.

(5) After the count value is cleared to 0000_H by clear operation by the encoder clear input, an up-count is performed.

(6) An underflow interrupt (ENCATIUD) is not output, and the underflow flag (ENCAnUDF) is not set.

28.6.13 Capture Operation between Count Clocks (ENCAnCCR1)

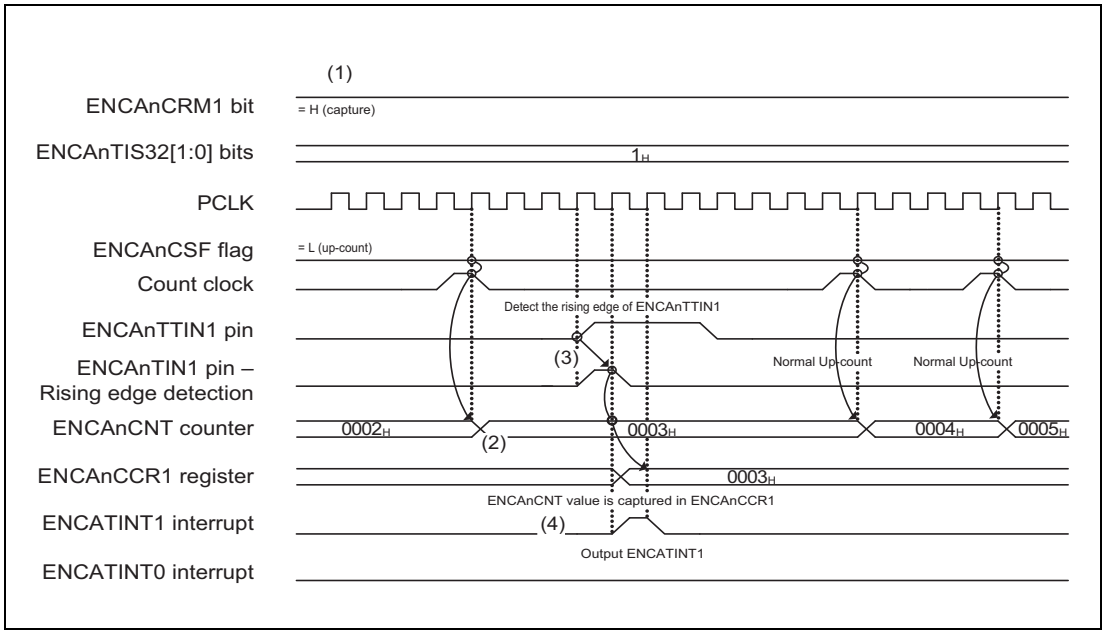

Figure 28.24 Capture Operation between Count Clocks (ENCAnCCR1)

(1) The values are set as follows: ENCAnCRM1 = 1 and ENCAnTIS32[1:0] = 01_B.

(2) An up-count is performed.

(3) The rising edge of the ENCAnTTIN1 input is detected, and the count value is captured in ENCAnCCR1.

(4) An interrupt request signal (ENCATINT1) corresponding to the capture to the ENCAnCCR1 register is output.

28.6.14 Capture Operation between Count Clocks (ENCAnCCR0)

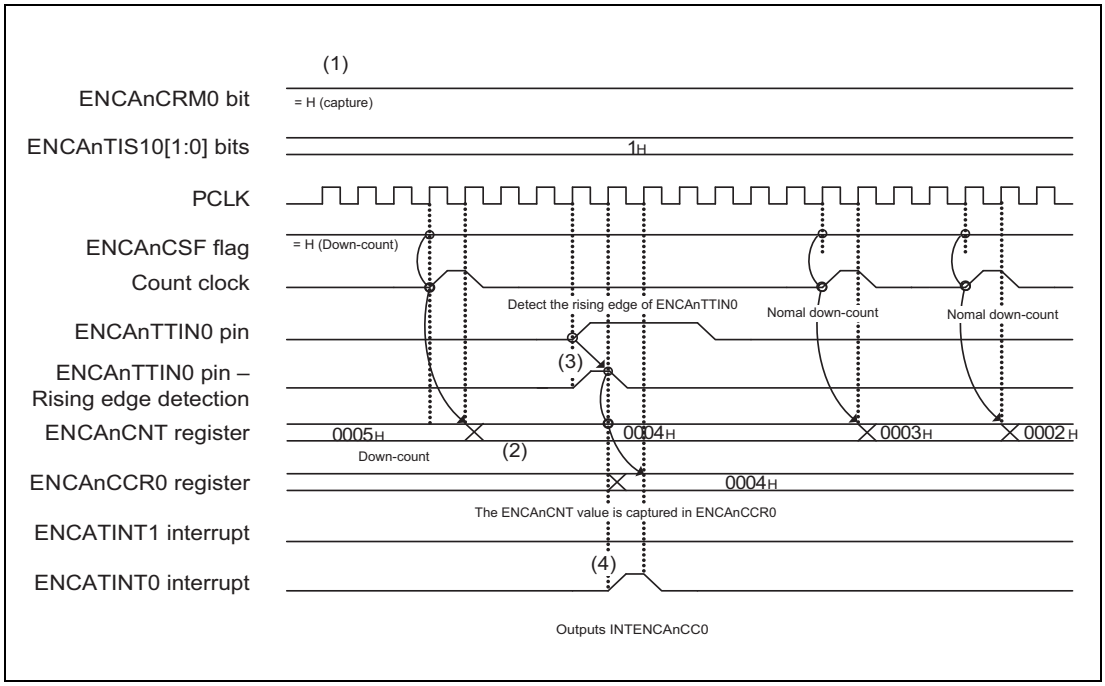

Figure 28.25 Capture Operation between Count Clocks (ENCAnCCR0)

(1) The values are set as follows: ENCAnCRM0 = 1, and ENCAnTIS10[1:0] = 01_B.

(2) A down-count is performed.

(3) The rising edge of the ENCAnTTIN0 input is detected, and the count value is captured in ENCAnCCR0.

(4) An interrupt request signal (ENCATINT0) corresponding to the capture to the ENCAnCCR0 register is output.

28.6.15 Encoder operation when compare match clear control is enabled and ENCAnCTS = 0

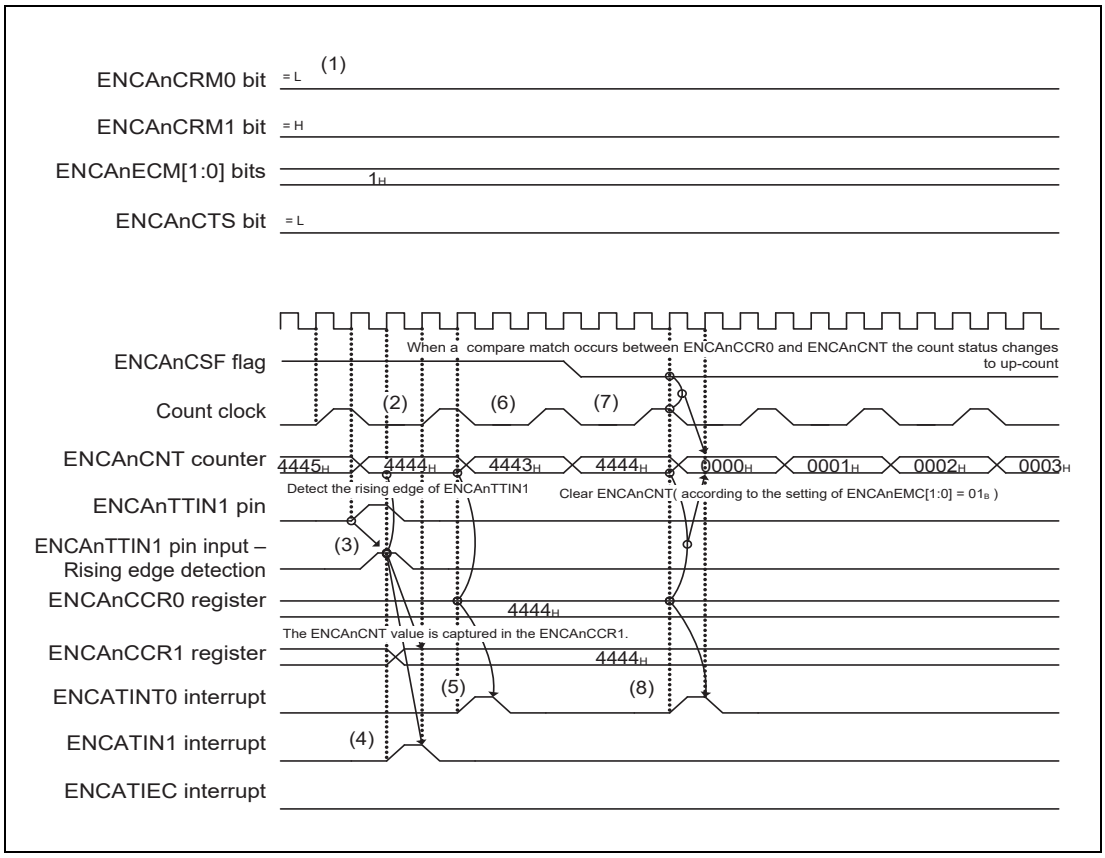

Figure 28.26 Encoder Operation when ENCAnECM[1:0] = 01_B and ENCAnCTS = 0

(1) The values are set as follows: ENCAnCCR0 = 4444_H, ENCAnCRM0 = 0, ENCAnCRM1 = 1, ENCAnECM[1:0] = 01_B, and ENCAnCTS = 0.

(2) A down-count is performed.

(3) The rising edge of the ENCAnTTIN1 input is detected, and the ENCAnCNT value (4444_H) is captured in the ENCAnCCR1 register.

(4) An interrupt signal (ENCATINT1) corresponding to the capture to the ENCAnCCR1 register is output.

(5) When a compare match occurs between ENCAnCNT (counted down from 4445_H to 4444_H) and ENCAnCCR0 (4444_H), a compare match interrupt (ENCATINT0) with ENCAnCCR0 is output.

(6) The count operation changes to up-count.

(7) When ENCAnCNT is counted up from 4443_H to 4444_H, a compare match with ENCAnCCR0 occurs again. Because the count operation is up-count when the compare match occurs, the count value is cleared according to the setting of ENCAnECM1 and ENCAnECM0 (01_B), and the ENCAnCNT value changes to 0000_H.

(8) When ENCAnCNT changes to 4444_H, a compare match interrupt (ENCATINT0) with ENCAnCCR0 is output.

28.6.16 Encoder operation when compare match clear control is enabled and ENCAnCTS = 1

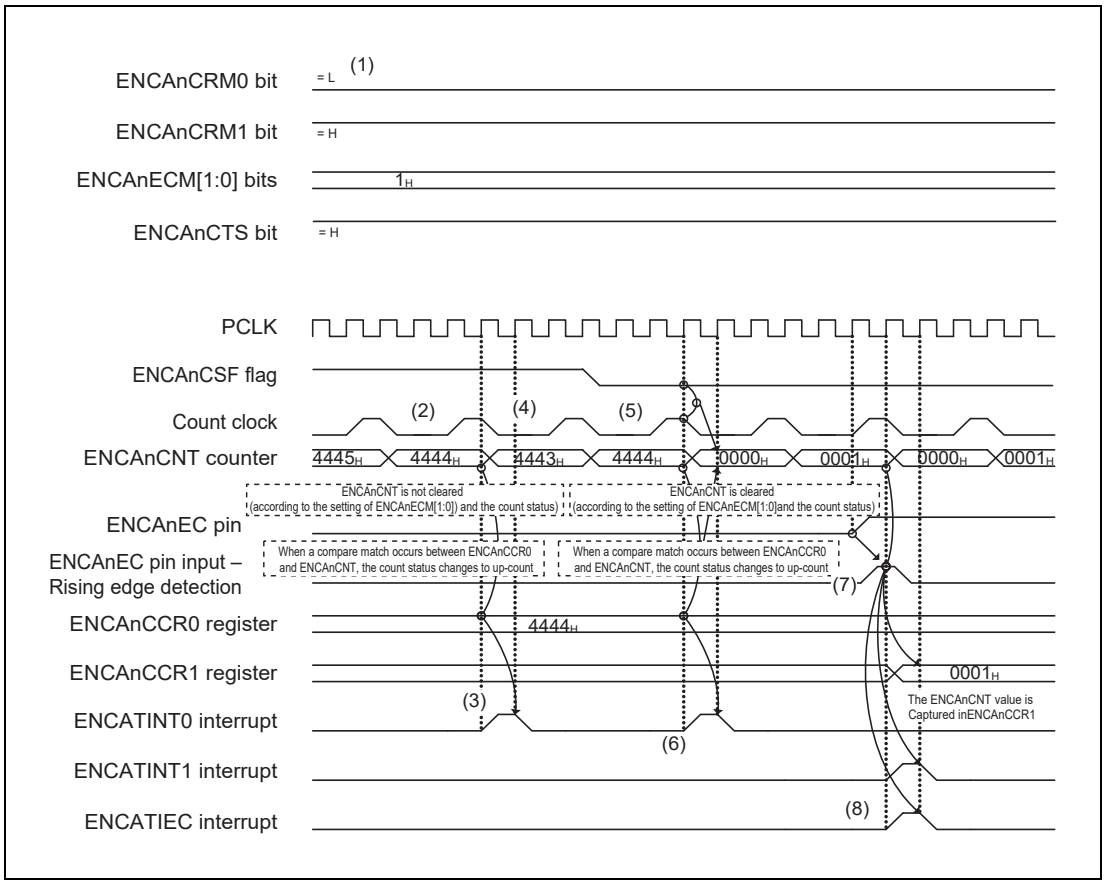

Figure 28.27 Encoder Operation when ENCAnECM[1:0] = 01_B and ENCAnCTS = 1

(1) The values are set as follows: ENCAnCCR0 = 4444_H, ENCAnCRM0 = 0, ENCAnCRM1 = 1, ENCAnECM[1:0] = 01_B, and ENCAnCTS = 1.

(2) A down-count is performed.

(3) When a compare match occurs between ENCAnCNT (counted down from 4445_H to 4444_H) and ENCAnCCR0 (4444_H), an interrupt request signal (ENCATINT0) is output.

(4) The count operation changes to up-count.

(5) When ENCAnCNT is counted up from 4443_H to 4444_H, a compare match with ENCAnCCR0 occurs again. Because the count operation is up-count when the compare match occurs, the count value is cleared according to the setting of ENCAnECM1 and ENCAnECM0 (01_B), and the ENCAnCNT value changes to 0000_H.

(6) When ENCAnCNT changes to 4444_H, a compare match interrupt (ENCATINT0) with ENCAnCCR0 is output.

(7) After the count value is cleared, an up-count is performed, and the count value changes to 0001_H. At this point, the ENCAnCNT value (0001_H) is captured in ENCAnCCR1 by detecting the rising edge of the ENCAnEC signal, and the counter is cleared to 0000_H.

(8) An interrupt (ENCATINT1) corresponding to the capture to the ENCAnCCR1 register and a clear interrupt (ENCATIEC) by ENCAnEC are output.

28.6.17 Encoder operation when compare match clear control is disabled

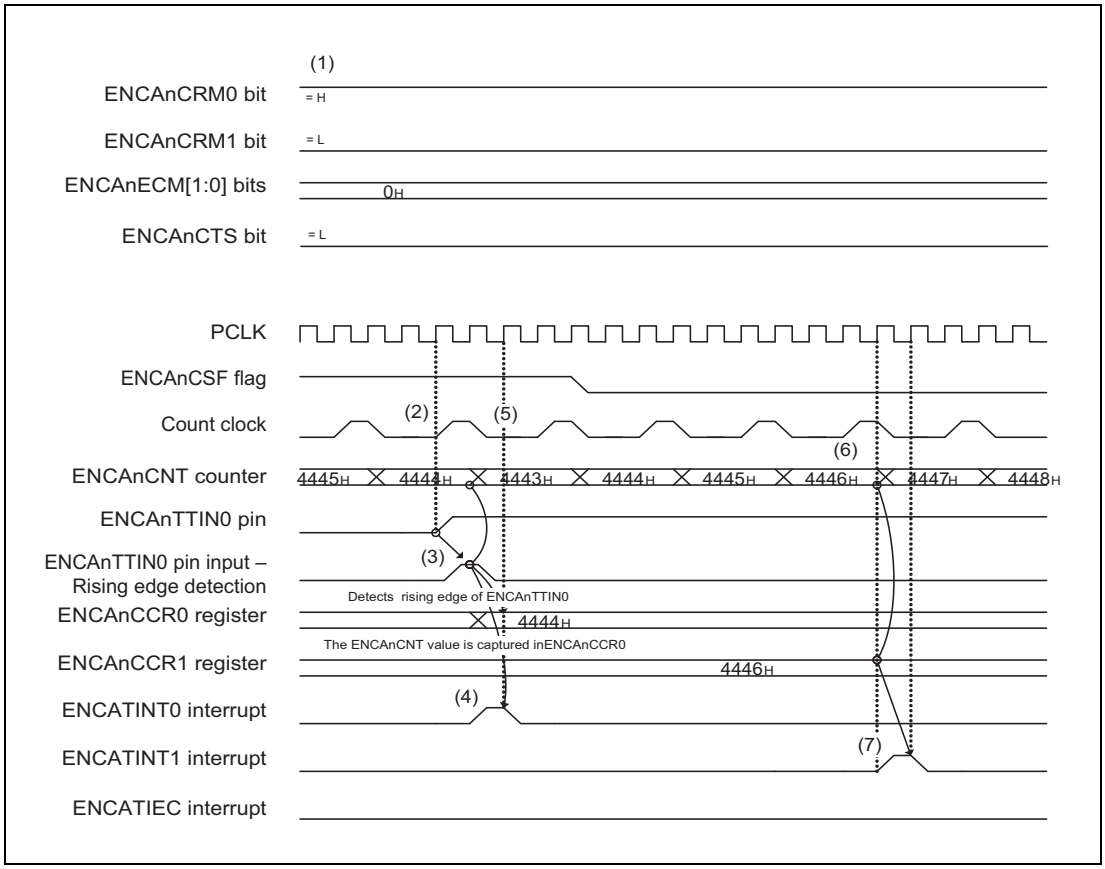

Figure 28.28 Encoder Operation when ENCAnECM[1:0] = 00_B

(1) The values are set as follows: ENCAnCCR1 = 4446_H, ENCAnCRM0 = 1, ENCAnCRM1 = 0, ENCAnECM[1:0] = 00_B, and ENCAnCTS = 0.

(2) A down-count is performed.

(3) When the rising edge of ENCAnTTIN0 is detected, the ENCAnCNT value (4444_H) is captured in ENCAnCCR0.

(4) An interrupt signal (ENCATINT0) corresponding to the capture to the ENCAnCCR0 register is output.

(5) The count operation changes to up-count.

(6) When ENCAnCNT changes to 4446_H, a compare match with ENCAnCCR1 is detected.

(7) A compare match interrupt (ENCATINT1) with ENCAnCCR1 is output.

28.6.18 Capture Operation Performed upon Clearing by ENCAnEC, ENCAnE0, and ENCAnE1 when ENCAnSCE = 1

28.6.18.1 Accompanying Capture Operation

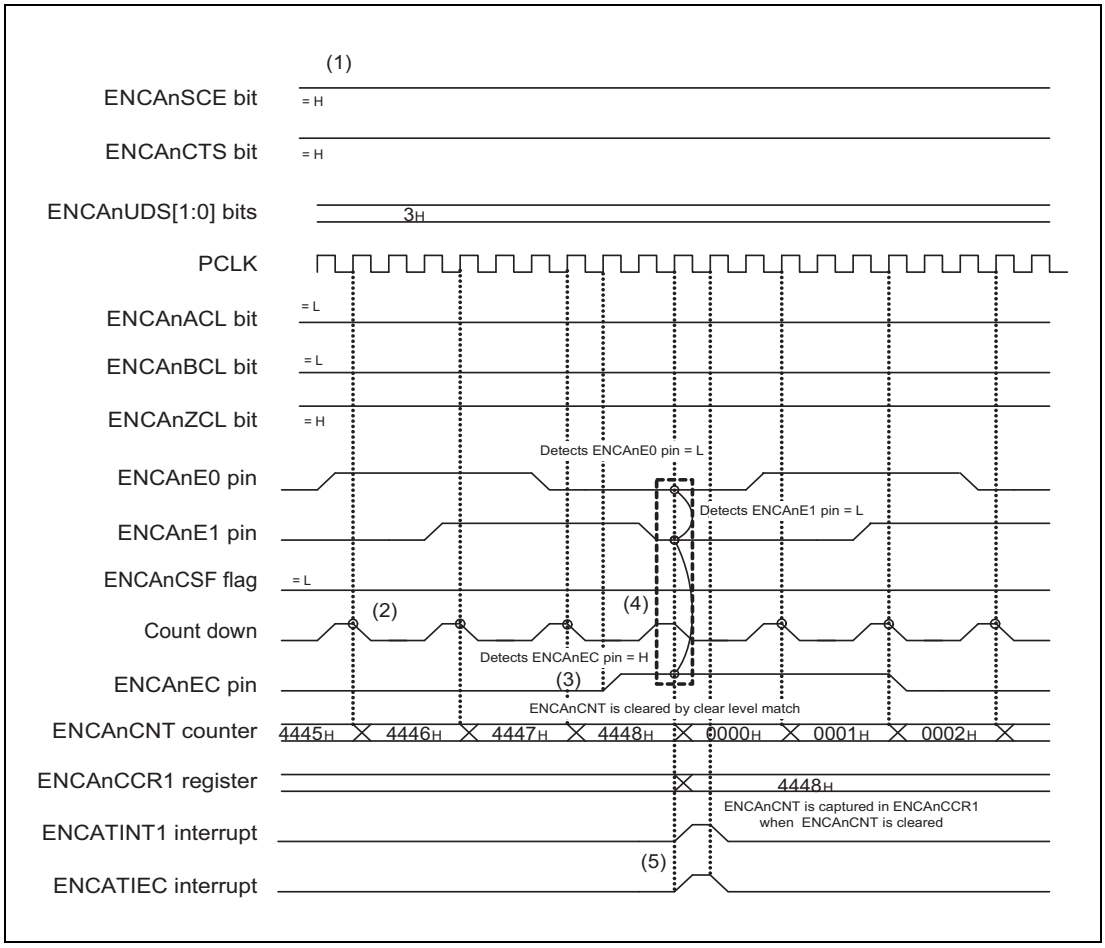

Figure 28.29 Capture Operation Performed upon Clearing by ENCAnEC, ENCAnE0, and ENCAnE1 when ENCAnSCE = 1

(1) The values are set as follows: ENCAnSCE = 1, ENCAnCTS = 1, ENCAnUDS[1:0] = 11_B, ENCAnACL = 0, ENCAnBCL = 0, and ENCAnZCL = 1.

(2) An up-count is performed.

(3) The count value is not cleared upon the rising edge of ENCAnEC.

(4) When ENCAnE0, ENCAnE1, and ENCAnEC reach the set clear level, the count value is cleared. The count value is captured in ENCAnCCR1 at the time of the clearing.

(5) At the time of the clearing, an interrupt (ENCATINT1) corresponding to the capture to the ENCAnCCR1 register and a clear interrupt (ENCATIEC) by ENCAnEC are output.

28.6.18.2 When the Timing of the ENCAnEC Input is Later than that of the ENCAnE1 Input during Up-count

(When ENCAnACL = 1, ENCAnBCL = 0, ENCAnZCL = 1, and ENCAnUDS[1:0] = 11_B)

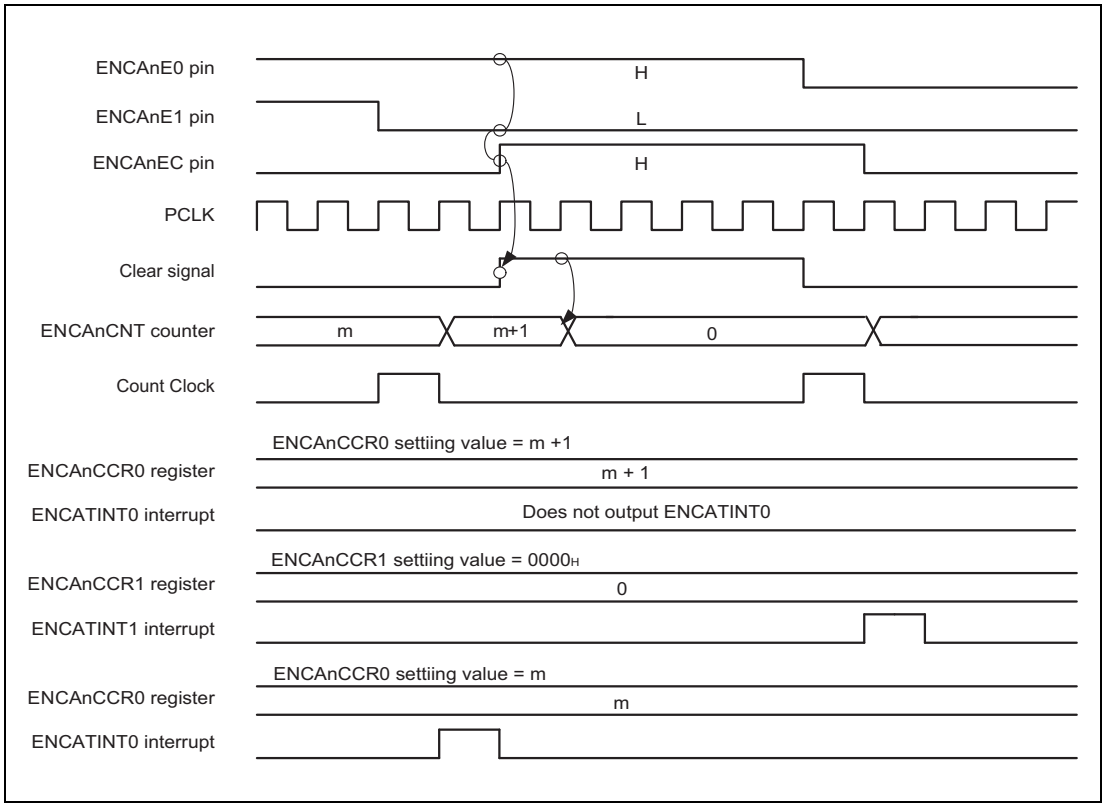

Figure 28.30 Clearing for when the Timing of the ENCAnEC Input is Later than that of the ENCAnE1 Input during Up-count

28.6.18.3 When the Timing of the ENCAnEC Input is the Same as that of the ENCAnE1 Input during Up-count

(When ENCAnACL = 1, ENCAnBCL = 0, ENCAnZCL = 1, and ENCAnUDS[1:0] = 11_B)

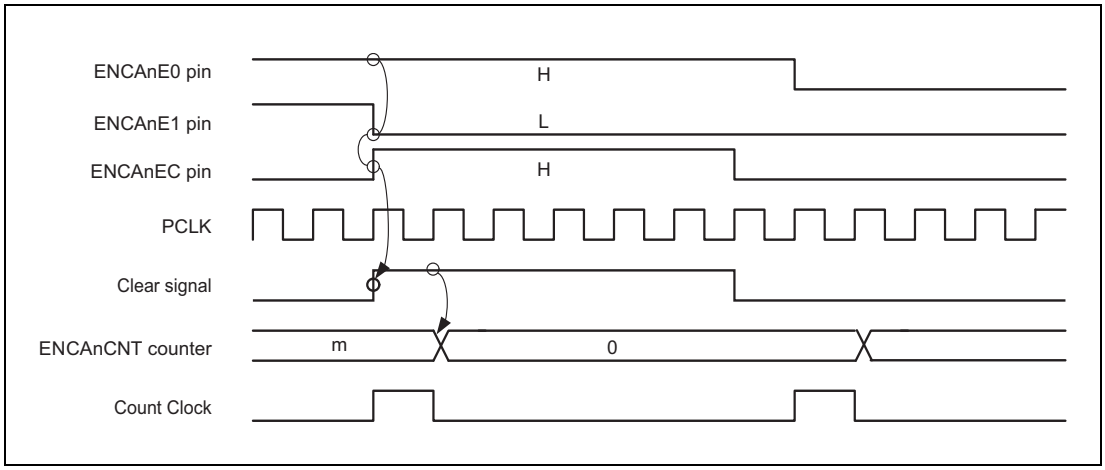

Figure 28.31 Clearing for when the Timing of the ENCAnEC Input is the Same as that of the ENCAnE1 Input During Up-count

28.6.18.4 When the Timing of the ENCAnEC Input is Earlier than that of the ENCAnE1 Input during Up-count

(When ENCAnACL = 1, ENCAnBCL = 0, ENCAnZCL = 1, and ENCAnUDS[1:0] = 11_B)

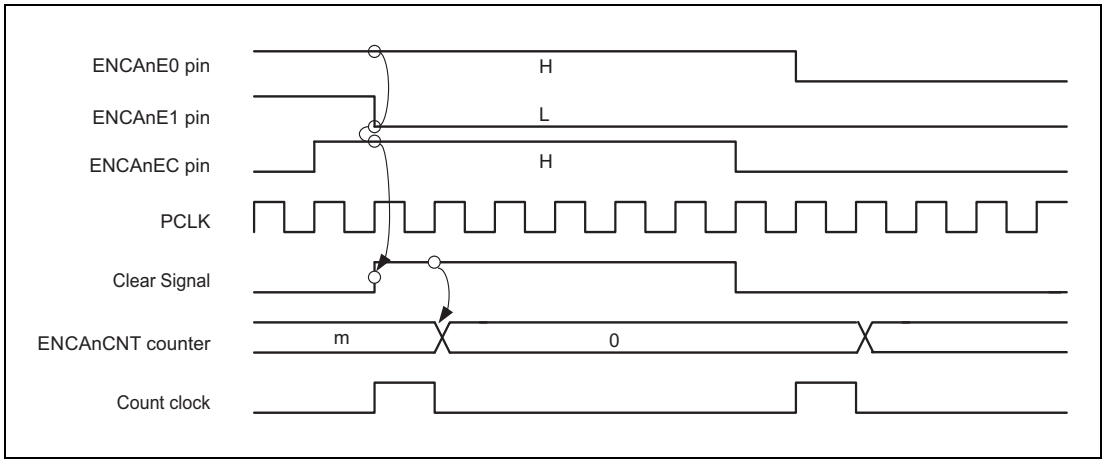

Figure 28.32 Clearing for when the Timing of the ENCAnEC Input is Earlier than that of the ENCAnE1 Input during Up-count

28.6.18.5 When the Timing of the ENCAnEC Input is Later than that of the ENCAnE1 Input during Down-count

(When ENCAnACL = 1, ENCAnBCL = 0, ENCAnZCL = 1, ENCAnUDS[1:0] = 11_B)

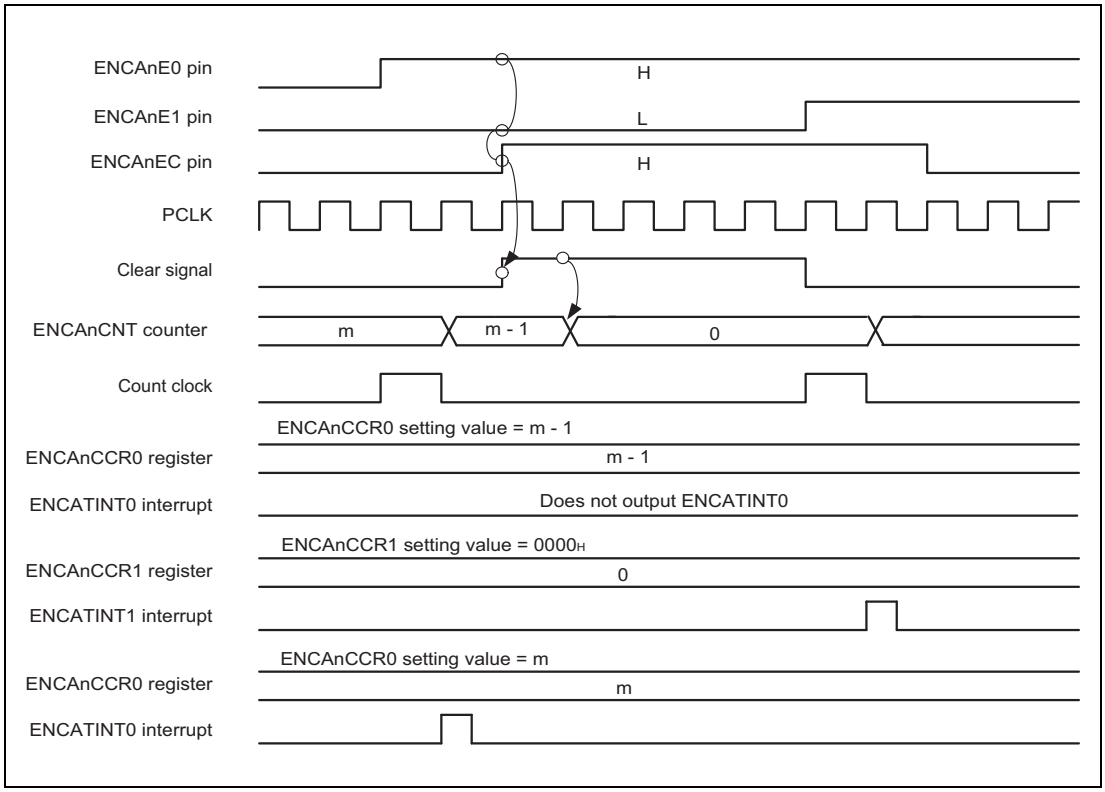

Figure 28.33 Clearing for when the Timing of the ENCAnEC Input is Later than that of the ENCAnE1 Input during Down-count

28.6.19 Capture Operation Performed upon Clearing by ENCAnEC when ENCAnSCE = 0

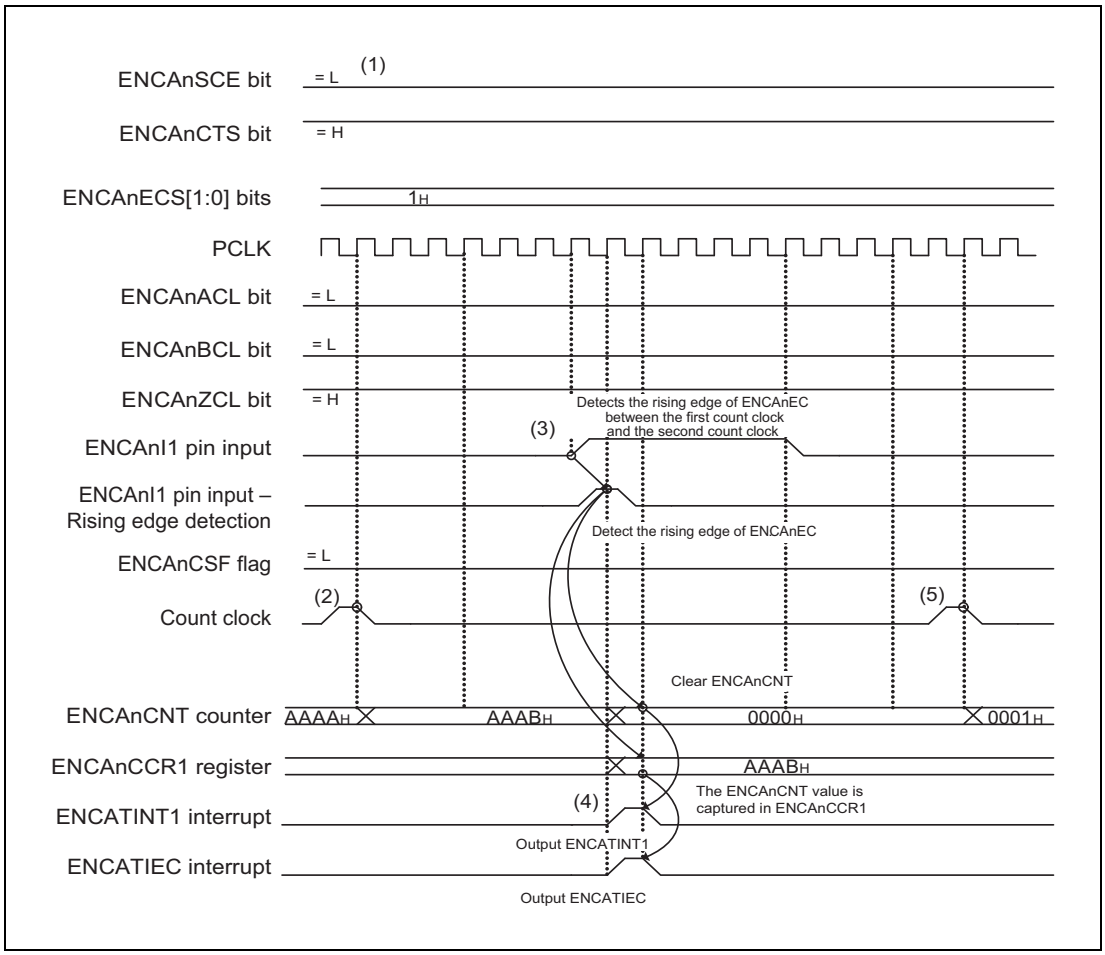

Figure 28.34 Capture Operation Performed upon Clearing by ENCAnEC when ENCAnSCE = 0

(1) The values are set as follows: ENCAnSCE = 0, ENCAnCTS = 1, and ENCAnECS[1:0] = 01_B.

(2) An up-count is performed.

(3) The rising edge of the ENCAnEC input is detected, and the ENCAnCNT value ($AAAB_H$) is captured in the ENCAnCCR1 register. Concurrently, clear operation by ENCAnEC is performed, and ENCAnCNT is reset to 0000_H.

(4) An interrupt (ENCATINT1) corresponding to the capture to the ENCAnCCR1 register and an encoder clear interrupt (ENCATIEC) by ENCAnEC are output.

(5) After the count value is cleared, an up-count is performed, and the count value changes to 0001_H.

Section 29 Peripheral Interconnection (PIC)

29.1 Features of RH850/P1x PIC

This section contains a generic description of the peripheral interconnection (PIC).

The first part of this section describes all RH850/P1x specific properties, such as the number of units, register base addresses, etc. The remainder of the section describes the functions and registers of the PIC (PIC1A, PIC2B).

29.1.1 Number of Units

This microcontroller has the following number of units of the PIC.

Table 29.1 Units (PIC1A)

Products	RH850/P1x
Number of Units	1
Name	PIC1A

Table 29.2 Units (PIC2B)

Products	RH850/P1x
Number of Units	1
Name	PIC2B

Table 29.3 Index

Index	Meaning
n	The individual unit of each timer and A/D converter is identified by the index “n”.
m	The individual channel of each timer and of A/D converter is identified by the index “m”.
x	The scan group number of A/D converter is indicated by the index “x”.
i	The variable used for description is indicated by the index “i”

29.1.2 Register Base Address

PIC base addresses are listed in the following table.

PIC register addresses are given as offsets from the base addresses in general.

Table 29.4 Register Base Address

Base Address Name	Base Address
<PIC1A_base>	$FFDD\ 0000_H$
<PIC2B_base>	$FFDD\ 1000_H$

29.1.3 Clock Supply

Supply clocks by and to PIC are listed in the following table.

Table 29.5 Clock Supply

Unit Name	Clock for the Unit	Supply Clock Name
PIC1A	PCLK	High-speed peripheral clock (CLK_HSB)
PIC2B	PCLK	High-speed peripheral clock (CLK_HSB)

29.1.4 Reset Sources

PIC reset sources are listed in the following table. PIC is initialized by these reset sources.

Table 29.6 Reset Sources

Unit Name	Reset Source
PIC1A	Reset by any reset sources.
PIC2B	Reset by any reset sources.

29.1.5 Input/Output Signals

Table 29.7 PIC Input/Output Signals (1/2)

Signal Name	I/O	Function	Connected to
ENCA0TSST	O	Simultaneous start trigger signal of ENCA0	ENCA0
ENCAT0AIN	O	Encoder input signal of ENCA0 (A phase)	
ENCAT0BIN	O	Encoder input signal of ENCA0 (B phase)	
ENCAT0ZIN	O	Encoder input signal of ENCA0 (Z phase)	
INTENCA0I1	O	ENCA0 capture trigger	
INTENCA0IEC	I	Clear interrupt signal by the ENCA0 encoder input (Z phase)	
ENCAT0EQ0	I	Match detection signal 0 of ENCA0	
ENCAT0EQ1	I	Match detection signal 1 of ENCA0	
ENCA1TSST	O	Simultaneous start trigger signal of ENCA1	ENCA1
ENCAT1AIN	O	Encoder input signal of ENCA1 (A phase)	
ENCAT1BIN	O	Encoder input signal of ENCA1 (B phase)	
ENCAT1ZIN	O	Encoder input signal of ENCA1 (Z phase)	
INTENCA1I1	O	ENCA1 capture trigger	
INTENCA1IEC	I	Clear interrupt signal by the ENCA1 encoder input (Z phase)	
ENCAT1EQ0	I	Match detection signal 0 of ENCA1	
ENCAT1EQ1	I	Match detection signal 1 of ENCA1	
TOP0TAPATHASIN	O	Hi-Z asynchronization signal	TAPA0
TOP1TAPATHASIN	O	Hi-Z asynchronization signal	TAPA1
TOP2TAPATHASIN	O	Hi-Z asynchronization signal	TAPA2
TOP3TAPATHASIN	O	Hi-Z asynchronization signal	TAPA3
TAUD0TSSTm (m = 0 to 15)	O	Simultaneous start trigger signal of TAUD0	TAUD0
TAUD0TOUTm (m = 0 to 15)	I	TAUD0 channel output signal	
TAUD0TINm (m = 0 to 15)	O	TAUD0 channel input signal	
INTTAUD0Im (m = 0 to 15)	I	TAUD0 interrupt signal	
TAUD1TSSTm (m = 0 to 15)	O	Simultaneous start trigger signal of TAUD1	TAUD1
TAUD1TOUTm (m = 0 to 15)	I	TAUD1 channel output signal	
TAUD1TINm (m = 0 to 15)	O	TAUD1 channel input signal	
INTTAUD1Im (m = 0 to 15)	I	TAUD1 interrupt signal	
TAUJ0TSSTm (m = 0 to 3)	O	Simultaneous start trigger signal of TAUJ0	TAUJ0
TAUJ0TINm (m = 0 to 3)	O	TAUJ0 channel input signal	
TAUJ1TSSTm (m = 0 to 3)	O	Simultaneous start trigger signal of TAUJ1	TAUJ1

Table 29.7 PIC Input/Output Signals (2/2)

Signal Name	I/O	Function	Connected to
TPBA0TSST	O	Simultaneous start trigger signal of TPBA0	TPBA0
TPBA1TSST	O	Simultaneous start trigger signal of TPBA1	TPBA1
TSG30TSST	O	Simultaneous start trigger signal of TSG30	TSG30
TSG30TSTOPC0	O	Timer output pattern control 0 signal	
TSG30TSTOPC1	O	Timer output pattern control 1 signal	
TSG30TSTPTE	I	TSTAP[0:2] edge detection signal	
TSG30TS2PEC	I	Two-phase encoder count signal	
TSG30TST2PUD	I	Two-phase encoder up/down signal	
TSG30TSTAPT0	O	Hall sensor input signal 0	
TSG30TSTAPT1	O	Hall sensor input signal 1	
TSG30TSTAPT2	O	Hall sensor input signal 2	
TSG30TO1	I	PWM output 1	
TSG30TO2	I	PWM output 2	
TSG30TO3	I	PWM output 3	
TSG30TO4	I	PWM output 4	
TSG30TO5	I	PWM output 5	
TSG30TO6	I	PWM output 6	
TSG31TSST	O	Simultaneous start trigger signal of TSG31	TSG31
TSG31TSTOPC0	O	Timer output pattern control 0 signal	
TSG31TSTOPC1	O	Timer output pattern control 1 signal	
TSG31TSTPTE	I	TSTAP[0:2] edge detection signal	
TSG31TS2PEC	I	Two-phase encoder count signal	
TSG31TST2PUD	I	Two-phase encoder up/down signal	
TSG31TSTAPT0	O	Hall sensor input signal 0	
TSG31TSTAPT1	O	Hall sensor input signal 1	
TSG31TSTAPT2	O	Hall sensor input signal 2	
TSG31TO1	I	PWM output 1	
TSG31TO2	I	PWM output 2	
TSG31TO3	I	PWM output 3	
TSG31TO4	I	PWM output 4	
TSG31TO5	I	PWM output 5	
TSG31TO6	I	PWM output 6	
ADCDTTOUT0m (m = 0 to 4)	I	A/D converter 0 hardware trigger	PIC2B
ADCDTTOUT1m (m = 0 to 4)	I	A/D converter 1 hardware trigger	
OST0TSST	O	Simultaneous start trigger signal of OSTM0	OSTM0
OST1TSST	O	Simultaneous start trigger signal of OSTM1	OSTM1
INTTSG30IER	I	Hi-Z control signal by TSG30 error interrupt	TSG30
INTTSG31IER	I	Hi-Z control signal by TSG31 error interrupt	TSG31
ERROROUT	I	ERROR output signal	ECM
INTADCD0ERR	I	ADCD0 error interrupt signal for Hi-Z control	ADCD0
INTADCD1ERR	I	ADCD1 error interrupt signal for Hi-Z control	ADCD1

29.1.6 External Input/Output Signals

External input/output signals of PIC are listed in the following table.

Table 29.8 PIC1A External Input/Output Signals (1/2)

Unit Signal Name	Description	Alternative Port Pin Signal Name
ENCA0I1	ENCA0 capture trigger input 1	ENCA0TIN1
ENCA1I1	ENCA1 capture trigger input 1	ENCA1TIN1
ENCA0E0	ENCA0 encoder input (count pulse 0)	ENCA0E0
ENCA1E0	ENCA1 encoder input (count pulse 0)	ENCA1E0
ENCA0E1	ENCA0 encoder input (count pulse 1)	ENCA0E1
ENCA1E1	ENCA1 encoder input (count pulse 1)	ENCA1E1
ENCA0EC	ENCA0 encoder input (clear pulse)	ENCA0EC
ENCA1EC	ENCA1 encoder input (clear pulse)	ENCA1EC
TAUD0TINm (m = 0 to 15)	TAUD0 channel input m (m = 0 to 15)	TAUD0Im (m = 0 to 15)
TAUD1TINm (m = 0 to 15)	TAUD1 channel input m (m = 0 to 15)	TAUD1Im (m = 0 to 15)
TAUD2TINm (m = 0 to 15)	TAUD2 channel input m (m = 0 to 15)	TAUD2Im (m = 0 to 15)
ESOn	Hi-Z control	TAPAnESO
TOP0U	Motor control output U phase	TAUD0O10
TOP0UB	Motor control output UB phase	TAUD0O11
TOP0V	Motor control output V phase	TAUD0O12
TOP0VB	Motor control output VB phase	TAUD0O13
TOP0W	Motor control output W phase	TAUD0O14
TOP0WB	Motor control output WB phase	TAUD0O15
TOP1U	Motor control output U phase	TAUD1O10
TOP1UB	Motor control output UB phase	TAUD1O11
TOP1V	Motor control output V phase	TAUD1O12
TOP1VB	Motor control output VB phase	TAUD1O13
TOP1W	Motor control output W phase	TAUD1O14
TOP1WB	Motor control output WB phase	TAUD1O15
TOP2U	Motor control output U phase	TSG30O1
TOP2UB	Motor control output UB phase	TSG30O2
TOP2V	Motor control output V phase	TSG30O3
TOP2VB	Motor control output VB phase	TSG30O4
TOP2W	Motor control output W phase	TSG30O5
TOP2WB	Motor control output WB phase	TSG30O6
TOP3U	Motor control output U phase	TSG31O1
TOP3UB	Motor control output UB phase	TSG31O2
TOP3V	Motor control output V phase	TSG31O3
TOP3VB	Motor control output VB phase	TSG31O4
TOP3W	Motor control output W phase	TSG31O5
TOP3WB	Motor control output WB phase	TSG31O6

Table 29.8 PIC1A External Input/Output Signals (2/2)

Unit Signal Name	Description	Alternative Port Pin Signal Name
TAUJ0TINm (m = 0 to 3)	TAUJ input	TAUJ0Im (m = 0 to 3)
TAUJ1TINm (m = 0 to 3)	TAUJ input	TAUJ1Im (m = 0 to 3)
TAUJ2TINm (m = 0 to 3)	TAUJ input	TAUJ2Im (m = 0 to 3)

Table 29.9 PIC2B External Input/Output Signals

Unit Signal Name	Outline	Alternative Port Pin Signal Name
ADTRG0Z	ADCD0 trigger	ADCD0TRG
ADTRG1Z	ADCD1 trigger	ADCD1TRG

29.2 Peripheral Interconnection — 1 (PIC1A)

29.2.1 Overview

29.2.1.1 Functional Overview

The peripheral interconnection-1 (PIC1A) realizes various functions by synchronous operation using multiple timers and by connecting the timer internal I/O signals between the timers.

CAUTION

The signal names used in the following descriptions are abbreviations. The actual signal names corresponding to each abbreviation are as follows:

INTm →TAUDnTINTm

TINm → TAUDnTTINm

TOUTm → TAUDnTTOUTm

CDRm → TAUDnCDRm

CNTm → TAUDnCNTm

The PIC1A has the following functions.

- Simultaneous start trigger function
- PWM output function with dead time
- High accuracy triangle wave PWM output function with dead time
- Delay pulse output function with dead time
- Trigger pulse width measurement function
- Encoder capture trigger select function
- Two-phase encoder control function (control method 1)
- Two-phase encoder control function (control method 2)
- Three-phase pulse input control function
- Three-phase encoder control function
- TAUD input select function
- Hi-Z control function
- A/D trigger select function
- Timer output monitor function (PWM-Diag)
- Timer input monitor function

29.2.2 Registers

29.2.2.1 List of Registers

The registers are listed in the following table.

The bits can be accessed only in 32-bit units. Access in 16-bits or 8-bits is operated as 32-bit access.

Table 29.10 Registers

Register Function	Symbol	Address
Simultaneous start trigger control register	PIC1ASST	<PIC1A_base> + 04_H
Simultaneous start control register 0	PIC1ASSER0	<PIC1A_base> + 10_H
Simultaneous start control register 1	PIC1ASSER1	<PIC1A_base> + 14_H
Simultaneous start control register 2	PIC1ASSER2	<PIC1A_base> + 18_H
Simultaneous start control register 3	PIC1ASSER3	<PIC1A_base> + $1C_H$
RS flip-flop circuit initialization register 00	PIC1AINI00	<PIC1A_base> + 20_H
DT initialization register 01	PIC1AINI01	<PIC1A_base> + 24_H
RS flip-flop circuit initialization register 10	PIC1AINI10	<PIC1A_base> + $2C_H$
DT initialization register 11	PIC1AINI11	<PIC1A_base> + 30_H
Hall sensor input select register	PIC1ATSGHALLSEL	<PIC1A_base> + 74_H
TAUD0 input select register	PIC1ATAUD0SEL	<PIC1A_base> + 78_H
TAUD1 input select register	PIC1ATAUD1SEL	<PIC1A_base> + $7C_H$
Hi-Z control register 0	PIC1AHIZCEN0	<PIC1A_base> + 80_H
Hi-Z control register 1	PIC1AHIZCEN1	<PIC1A_base> + 84_H
Hi-Z control register 2	PIC1AHIZCEN2	<PIC1A_base> + 88_H
Hi-Z control register 3	PIC1AHIZCEN3	<PIC1A_base> + $8C_H$
ENCATIN1 input select register 400	PIC1AENCSEL400	<PIC1A_base> + $B8_H$
ENCATIN1 input select register 410	PIC1AENCSEL410	<PIC1A_base> + BC_H
Timer input/output control register 200	PIC1AREG200	<PIC1A_base> + $C0_H$
Timer input/output control register 201	PIC1AREG201	<PIC1A_base> + $C4_H$
Timer input/output control register 202	PIC1AREG202	<PIC1A_base> + $C8_H$
Timer input/output control register 203	PIC1AREG203	<PIC1A_base> + CC_H
Timer input/output control register 210	PIC1AREG210	<PIC1A_base> + $D4_H$
Timer input/output control register 211	PIC1AREG211	<PIC1A_base> + $D8_H$
Timer input/output control register 212	PIC1AREG212	<PIC1A_base> + DC_H
Timer input/output control register 213	PIC1AREG213	<PIC1A_base> + $E0_H$
Timer input/output control register 30	PIC1AREG30	<PIC1A_base> + $E8_H$
Timer input/output control register 31	PIC1AREG31	<PIC1A_base> + EC_H
Timer input/output control register 50	PIC1AREG50	<PIC1A_base> + $F8_H$
Timer input/output control register 51	PIC1AREG51	<PIC1A_base> + FC_H
Synchronous clear enable register	SELBSSER	FFDD 2000_H
Port output monitor select register	POMONSEL	FFDD 7400_H
Port input monitor select register	PIMONSEL	FFDD 7000_H

Combinations of registers used for each function are listed in the following table.

Table 29.11 Registers Used by Each Function

Section Number	Function Name	PIC1ASST	PIC1ASSER				PIC1AINI				PIC1ATSGHALLSEL	PIC1ATAUD0SEL	PIC1ATAUD1SEL	PIC1AHIZCEN				PIC1AENCSEL4		PIC1AREG												POMONSEL	PIMONSEL	SELBSSER
			0	1	2	3	00	01	10	11	—	—	—	0	1	2	3	00	10	200	201	202	203	210	211	212	213	30	31	50	51			
29.2.3.1	Simultaneous Start Trigger Function	√	√	√	√	√	—	—	—	—	—	√	√	—	—	—	—	—	—	—	—	—	—	—	—	—	—	—	—	—	—	—	—	—
29.2.3.2	PWM Output Function with Dead Time	—	—	—	—	—	√	—	√	—	—	√	√	—	—	—	—	—	—	—	√	√	√	—	√	√	√	—	—	—	—	—	—	—
29.2.3.3	High Accuracy Triangle Wave PWM Output Function with Dead Time	—	—	—	—	—	—	—	—	—	—	√	√	—	—	—	—	—	—	√	√	√	√	√	√	√	√	—	—	—	—	—	—	—
29.2.3.4	Delay Pulse Output Function with Dead Time	—	—	—	—	—	—	—	—	—	—	√	√	—	—	—	—	—	—	—	√	√	√	—	√	√	√	—	—	—	—	—	—	—
29.2.3.5	Trigger Pulse Width Measurement Function	—	—	—	—	—	—	√	—	√	—	—	—	—	—	—	—	—	—	—	—	—	—	—	—	—	—	√	√	—	—	—	—	—
29.2.3.6	Encoder Capture Trigger Select Function	—	—	—	—	—	—	—	—	—	—	—	—	—	—	—	—	√	√	—	—	—	—	—	—	—	—	√	—	—	—	—	—	—
29.2.3.7	Two-Phase Encoder Control Function (Control Method 1)	—	—	—	—	—	—	—	—	—	—	—	—	—	—	—	—	—	—	—	—	—	—	—	—	—	—	√	—	√	√	—	—	—
29.2.3.8	Two-Phase Encoder Control Function (Control Method 2)	—	—	—	—	—	—	—	—	—	—	—	—	—	—	—	—	—	—	—	—	—	—	—	—	—	—	√	—	√	√	—	—	—
29.2.3.9	Three-Phase Pulse Input Control Function	—	—	—	—	—	—	—	—	—	√	—	—	—	—	—	—	—	—	√	—	√	—	√	—	√	—	—	—	√	√	—	—	—
29.2.3.10	Three-Phase Encoder Function	—	—	—	—	—	—	—	—	—	√	—	—	—	—	—	—	—	—	—	—	—	—	—	—	—	—	√	—	√	√	—	—	—
29.2.3.11	TAUD Input Select Function	—	—	—	—	—	—	—	—	—	—	—	—	—	—	—	—	—	—	√	—	√	—	√	—	√	—	—	√	—	—	—	—	—
29.2.3.12	Hi-Z Control Function	—	—	—	—	—	—	—	—	—	—	—	—	√	√	√	√	—	—	—	—	—	—	—	—	—	—	—	—	—	—	—	—	—
29.2.3.13	Timer Output Monitor Function (PWM-Diag)	—	—	—	—	—	—	—	—	—	—	—	—	—	—	—	—	—	—	—	—	—	—	—	—	—	—	—	—	—	—	√	—	—
29.2.3.14	Timer Input Monitor Function	—	—	—	—	—	—	—	—	—	—	—	—	—	—	—	—	—	—	—	—	—	—	—	—	—	—	—	—	—	—	—	√	—
29.2.3.15	TSG3 Synchronous clear function	—	—	—	—	—	—	—	—	—	—	—	—	—	—	—	—	—	—	—	—	—	—	—	—	—	—	—	—	—	—	—	—	√

29.2.2.2 PIC1ASST — Simultaneous Start Trigger Control Register

The PIC1ASST register is an 8-bit register that selects the simultaneous start trigger.

Access: This register can be read/written in 8-bit units.

Address: FFDD 0004_H

Value after reset: 00_H

Bit	7	6	5	4	3	2	1	0
	—	—	—	—	—	—	—	PIC1ASYNCTRG
Value after reset	0	0	0	0	0	0	0	0
R/W	R	R	R	R	R	R	R	R/W

Table 29.12 PIC1ASST Register Contents

Bit Position	Bit Name	Function
7 to 1	Reserved	When read, the value after reset is read. When writing, write the value after reset.
0	PIC1ASYNCTRG	Generates a start trigger for the timer whose simultaneous start is enabled. 0: Disabled 1: Simultaneous start trigger (the pulse of the width of 1PCLK is output).

Note: PIC1ASYNCTRG always reads 0 when read.

29.2.2.3 PIC1ASSER0 — Simultaneous Start Control Register 0

The PIC1ASSER0 register enables a start trigger for each channel of TAUD0.

Access: This register can be read/written in 16-bit units.

Address: FFDD 0010_H

Value after reset: 0000_H

Bit	15	14	13	12	11	10	9	8	7	6	5	4	3	2	1	0
	PIC1ASSER015	PIC1ASSER014	PIC1ASSER013	PIC1ASSER012	PIC1ASSER011	PIC1ASSER010	PIC1ASSER009	PIC1ASSER008	PIC1ASSER007	PIC1ASSER006	PIC1ASSER005	PIC1ASSER004	PIC1ASSER003	PIC1ASSER002	PIC1ASSER001	PIC1ASSER000
Value after reset	0	0	0	0	0	0	0	0	0	0	0	0	0	0	0	0
R/W	R/W	R/W	R/W	R/W	R/W	R/W	R/W	R/W	R/W	R/W	R/W	R/W	R/W	R/W	R/W	R/W

Table 29.13 PIC1ASSER0 Register Contents

Bit Position	Bit Name	Function
15 to 0	PIC1ASSER0m	Enable or disable a simultaneous start trigger for CHm in the TAUD0 timer. 0: Disabled 1: Enabled

29.2.2.4 PIC1ASSER1 — Simultaneous Start Control Register 1

The PIC1ASSER1 register enables a start trigger for each channel of TAUD1.

Access: This register can be read/written in 16-bit units.

Address: FFDD 0014_H

Value after reset: 0000_H

Bit	15	14	13	12	11	10	9	8	7	6	5	4	3	2	1	0
	PIC1ASSER115	PIC1ASSER114	PIC1ASSER113	PIC1ASSER112	PIC1ASSER111	PIC1ASSER110	PIC1ASSER109	PIC1ASSER108	PIC1ASSER107	PIC1ASSER106	PIC1ASSER105	PIC1ASSER104	PIC1ASSER103	PIC1ASSER102	PIC1ASSER101	PIC1ASSER100
Value after reset	0	0	0	0	0	0	0	0	0	0	0	0	0	0	0	0
R/W	R/W	R/W	R/W	R/W	R/W	R/W	R/W	R/W	R/W	R/W	R/W	R/W	R/W	R/W	R/W	R/W

Table 29.14 PIC1ASSER1 Register Contents

Bit Position	Bit Name	Function
15 to 0	PIC1ASSER1m	Enable or disable a simultaneous start trigger for CHm in the TAUD1 timer. 0: Disabled 1: Enabled

29.2.2.5 PIC1ASSER2 — Simultaneous Start Control Register 2

The PIC1ASSER2 register enables a start trigger of TAUJn, TSG3n, TPBAn, and ENCAn.

Access: This register can be read/written in 16-bit units.

Address: FFDD 0018_H

Value after reset: 0000_H

Bit	15	14	13	12	11	10	9	8	7	6	5	4	3	2	1	0
	—	—	PIC1ASSER213	PIC1ASSER212	PIC1ASSER211	PIC1ASSER210	PIC1ASSER209	PIC1ASSER208	PIC1ASSER207	PIC1ASSER206	PIC1ASSER205	PIC1ASSER204	PIC1ASSER203	PIC1ASSER202	PIC1ASSER201	PIC1ASSER200
Value after reset	0	0	0	0	0	0	0	0	0	0	0	0	0	0	0	0
R/W	R	R	R/W	R/W	R/W	R/W	R/W	R/W	R/W	R/W	R/W	R/W	R/W	R/W	R/W	R/W

Table 29.15 PIC1ASSER2 Register Contents (1/2)

Bit Position	Bit Name	Function
15, 14	Reserved	When read, the value after reset is read. When writing, write the value after reset.
13	PIC1ASSER213	Enables or disables a simultaneous start trigger for the ENCA1. 0: Disabled 1: Enabled
12	PIC1ASSER212	Enables or disables a simultaneous start trigger for the ENCA0. 0: Disabled 1: Enabled
11	PIC1ASSER211	Enables or disables a simultaneous start trigger for the TPBA1. 0: Disabled 1: Enabled
10	PIC1ASSER210	Enables or disables a simultaneous start trigger for the TPBA0. 0: Disabled 1: Enabled
9	PIC1ASSER209	Enables or disables a simultaneous start trigger for the TSG31. 0: Disabled 1: Enabled
8	PIC1ASSER208	Enables or disables a simultaneous start trigger for the TSG30. 0: Disabled 1: Enabled
7	PIC1ASSER207	Enables or disables a simultaneous start trigger for CH03 of TAUJ1. 0: Disabled 1: Enabled
6	PIC1ASSER206	Enables or disables a simultaneous start trigger for CH02 of TAUJ1. 0: Disabled 1: Enabled
5	PIC1ASSER205	Enables or disables a simultaneous start trigger for CH01 of TAUJ1. 0: Disabled 1: Enabled
4	PIC1ASSER204	Enables or disables a simultaneous start trigger for CH00 of TAUJ1. 0: Disabled 1: Enabled
3	PIC1ASSER203	Enables or disables a simultaneous start trigger for CH03 of TAUJ0. 0: Disabled 1: Enabled
2	PIC1ASSER202	Enables or disables a simultaneous start trigger for CH02 of TAUJ0. 0: Disabled 1: Enabled
1	PIC1ASSER201	Enables or disables a simultaneous start trigger for CH01 of TAUJ0. 0: Disabled 1: Enabled

Table 29.15 PIC1ASSER2 Register Contents (2/2)

Bit Position	Bit Name	Function
0	PIC1ASSER200	Enables or disables a simultaneous start trigger for CH00 of TAUJ0. 0: Disabled 1: Enabled

29.2.2.6 PIC1ASSER3 — Simultaneous Start Control Register 3

The PIC1ASSER3 register enables a start trigger for each channel of OSTMn.

Access: This register can be read/written in 16-bit units.

Address: FFDD $001C_H$

Value after reset: 0000_H

Bit	15	14	13	12	11	10	9	8	7	6	5	4	3	2	1	0
	—	—	—	—	—	—	—	—	—	—	—	—	—	—	PIC1ASSER301	PIC1ASSER300
Value after reset	0	0	0	0	0	0	0	0	0	0	0	0	0	0	0	0
R/W	R	R	R	R	R	R	R	R	R	R	R	R	R	R	R/W	R/W

Table 29.16 PIC1ASSER3 Register Contents

Bit Position	Bit Name	Function
15 to 2	Reserved	When read, the value after reset is read. When writing, write the value after reset.
1	PIC1ASSER301	Enables or disables a simultaneous start trigger for OSTM1. 0: Disabled 1: Enabled
0	PIC1ASSER300	Enables or disables a simultaneous start trigger for OSTM0. 0: Disabled 1: Enabled

29.2.2.7 PIC1AINIn0 — Flip-Flop Circuit Initialization Register n0

The PIC1AINIn0 register enables initialization of the RS flip-flop circuits 4 to 2 (RSn4 to 2).

Access: This register can be read/written in 8-bit units.

Address: FFDD 0020_H (n=0), FFDD $002C_H$ (n=1)

Value after reset: 00_H

Bit	7	6	5	4	3	2	1	0
	—	—	—	PIC1AINIn04	PIC1AINIn03	PIC1AINIn02	—	—
Value after reset	0	0	0	0	0	0	0	0
R/W	R	R	R	R/W	R/W	R/W	R	R

Table 29.17 PIC1AINIn0 Register Contents

Bit Position	Bit Name	Function
7 to 5	Reserved	When read, the value after reset is read. When writing, write the value after reset.
4 to 2	PIC1AINIn0[4:2]	Enable or disable initialization of the RS flip-flop circuits 4 to 2 (RSn4 to RSn2) used for the PWM output function with dead time. 0: Disabled 1: Initialized When read always read as 0.
1, 0	Reserved	When read, the value after reset is read. When writing, write the value after reset.

29.2.2.8 PIC1AINIn1 — DT Initialization Register n1

The PIC1AINIn1 register enables initialization of the latch & toggle (DT) circuit.

Access: This register can be read/written in 8-bit units.

Address: FFDD 0024_H (n=0), FFDD 0030_H (n=1)

Value after reset: 00_H

Bit	7	6	5	4	3	2	1	0
	—	—	—	—	—	PIC1AINIn12	PIC1AINIn11	PIC1AINIn10
Value after reset	0	0	0	0	0	0	0	0
R/W	R	R	R	R	R	R/W	R/W	R/W

Table 29.18 PIC1AINIn1 Register Contents

Bit Position	Bit Name	Function
7 to 3	Reserved	When read, the value after reset is read. When writing, write the value after reset.
2 to 0	PIC1AINIn1[2:0]	Enable or disable initialization of the DT circuit to be used for the trigger pulse width measurement function. 0: Disabled 1: Initialized When read always read as 0.

29.2.2.9 PIC1ATSGHALLSEL — Hall Sensor Input Select Register

The PIC1ATSGHALLSEL register sets the pin conditions to input the external hall sensor signal.

Access: This register can be read/written in 8-bit units.

Address: FFDD 0074_H

Value after reset: 00_H

Bit	7	6	5	4	3	2	1	0
	—	—	—	—	—	—	TSG1HALLSEL	TSG0HALLSEL
Value after reset	0	0	0	0	0	0	0	0
R/W	R	R	R	R	R	R	R/W	R/W

Table 29.19 PIC1ATSGHALLSEL Register Contents

Bit Position	Bit Name	Function
7 to 2	Reserved	When read, the value after reset is read. When writing, write the value after reset.
1	TSG1HALLSEL	Sets pin condition to input the external hall sensor signal.*1 0: Separate input 1: Alternative input with ENCA
0	TSG0HALLSEL	Sets pin condition to input the external hall sensor signal.*1 0: Separate input 1: Alternative input with ENCA

Note 1. When TSG3nPTSI2 to TSG3nPTSI0 are used for input pattern to the TSG3, always set this bit to 1. In addition, set bit0 in the PIC1AREG50 register and bit0 in the PIC1AREG51 register as described below. When those bits are not used, do not change the setting from the value after reset.

TSG1HALLSEL	PIC1AREG5100	Function
1	1	Select input pin ENCA1E0, ENCA1E1, and ENCA1EC.
Other than above		Setting prohibited.

TSG0HALLSEL	PIC1AREG5000	Function
1	0	Select input pin ENCA0E0, ENCA0E1 and ENCA0EC
Other than above		Setting prohibited

29.2.2.10 PIC1ATAUD0SEL — TAUD0 Input Select Register

The PIC1ATAUD0SEL register is a 32-bit register that selects TAUDTIN input signals.

Access: This register can be read/written in 32-bit units.

Address: FFDD 0078_H

Value after reset: $0000\ 0000_H$

Bit	31	30	29	28	27	26	25	24	23	22	21	20	19	18	17	16
	PIC1ATAUD0IN143	PIC1ATAUD0IN142	PIC1ATAUD0IN141	PIC1ATAUD0IN140	PIC1ATAUD0IN123	PIC1ATAUD0IN122	PIC1ATAUD0IN121	PIC1ATAUD0IN120	PIC1ATAUD0IN103	PIC1ATAUD0IN102	PIC1ATAUD0IN101	PIC1ATAUD0IN100	PIC1ATAUD0IN83	PIC1ATAUD0IN82	PIC1ATAUD0IN81	PIC1ATAUD0IN80
Value after reset	0	0	0	0	0	0	0	0	0	0	0	0	0	0	0	0
R/W	R/W	R/W	R/W	R/W	R/W	R/W	R/W	R/W	R/W	R/W	R/W	R/W	R/W	R/W	R/W	R/W

Bit	15	14	13	12	11	10	9	8	7	6	5	4	3	2	1	0
	PIC1ATAUD0IN63	PIC1ATAUD0IN62	PIC1ATAUD0IN61	PIC1ATAUD0IN60	PIC1ATAUD0IN43	PIC1ATAUD0IN42	PIC1ATAUD0IN41	PIC1ATAUD0IN40	PIC1ATAUD0IN23	PIC1ATAUD0IN22	PIC1ATAUD0IN21	PIC1ATAUD0IN20	PIC1ATAUD0IN03	PIC1ATAUD0IN02	PIC1ATAUD0IN01	PIC1ATAUD0IN00
Value after reset	0	0	0	0	0	0	0	0	0	0	0	0	0	0	0	0
R/W	R/W	R/W	R/W	R/W	R/W	R/W	R/W	R/W	R/W	R/W	R/W	R/W	R/W	R/W	R/W	R/W

Table 29.20 PIC1ATAUD0SEL Register Contents

Bit Position	Bit Name	Function
2m+3 2m+2	PIC1ATAUD0Nm[3:2]	Select the signal to output to TAUD0TIN (m+1) output pin. 00: TAUD0TIN (m+1) is selected. 01: TAUD0TIN (m) is selected. 10: TAUD1TIN (m+1) is selected. 11: TAUD1TIN (m) is selected.
2m+1 2m	PIC1ATAUD0Nm[1:0]	Select the signal to output to TAUD0TIN (m) output pin. 00: TAUD0TIN (m) is selected. 01: TAUD0TIN (m+1) is selected. 10: TAUD1TIN (m) is selected. 11: TAUD1TIN (m+1) is selected.

Note: m is an even channel number of TAUD0 (CHm_even)

29.2.2.11 PIC1ATAUD1SEL — TAUD1 Input Select Register

The PIC1ATAUD1SEL register is a 32-bit register that selects TAUDTIN input signals.

Access: This register can be read/written in 32-bit units.

Address: FFDD 007C$_H$

Value after reset: 0000 0000$_H$

Bit	31	30	29	28	27	26	25	24	23	22	21	20	19	18	17	16
	PIC1ATAUD1IN143	PIC1ATAUD1IN142	PIC1ATAUD1IN141	PIC1ATAUD1IN140	PIC1ATAUD1IN123	PIC1ATAUD1IN122	PIC1ATAUD1IN121	PIC1ATAUD1IN120	PIC1ATAUD1IN103	PIC1ATAUD1IN102	PIC1ATAUD1IN101	PIC1ATAUD1IN100	PIC1ATAUD1IN83	PIC1ATAUD1IN82	PIC1ATAUD1IN81	PIC1ATAUD1IN80
Value after reset	0	0	0	0	0	0	0	0	0	0	0	0	0	0	0	0
R/W	R/W	R/W	R/W	R/W	R/W	R/W	R/W	R/W	R/W	R/W	R/W	R/W	R/W	R/W	R/W	R/W

Bit	15	14	13	12	11	10	9	8	7	6	5	4	3	2	1	0
	PIC1ATAUD1IN63	PIC1ATAUD1IN62	PIC1ATAUD1IN61	PIC1ATAUD1IN60	PIC1ATAUD1IN43	PIC1ATAUD1IN42	PIC1ATAUD1IN41	PIC1ATAUD1IN40	PIC1ATAUD1IN23	PIC1ATAUD1IN22	PIC1ATAUD1IN21	PIC1ATAUD1IN20	PIC1ATAUD1IN03	PIC1ATAUD1IN02	PIC1ATAUD1IN01	PIC1ATAUD1IN00
Value after reset	0	0	0	0	0	0	0	0	0	0	0	0	0	0	0	0
R/W	R/W	R/W	R/W	R/W	R/W	R/W	R/W	R/W	R/W	R/W	R/W	R/W	R/W	R/W	R/W	R/W

Table 29.21 PIC1ATAUD1SEL Register Contents

Bit Position	Bit Name	Function
2m+3 2m+2	PIC1ATAUD1IN m[3:2]	Select the signal to output to TAUD1TIN (m+1) output pin 00: TAUD1TIN (m+1) is selected. 01: TAUD1TIN (m) is selected. 10: TAUD0TIN (m+1) is selected. 11: TAUD0TIN (m) is selected.
2m+1 2m	PIC1ATAUD1IN m[1:0]	Select the signal to output to TAUD1TIN (m) output pin 00: TAUD1TIN (m) is selected. 01: TAUD1TIN (m+1) is selected. 10: TAUD0TIN (m) is selected. 11: TAUD0TIN (m+1) is selected.

Note: m is an even channel number of TAUD1 (CHm_even)

29.2.2.12 PIC1AHIZCEN0 — Hi-Z Control Register 0

The PIC1AHIZCEN0 register selects Hi-Z control input signals of TAUD0.

Access: This register can be read/written in 8-bit units.

Address: FFDD 0080_H

Value after reset: 00_H

Bit	7	6	5	4	3	2	1	0
	PIC1AHIZCEN 07	PIC1AHIZCEN 06	PIC1AHIZCEN 05	—	—	—	—	PIC1AHIZCEN 00
Value after reset	0	0	0	0	0	0	0	0
R/W	R/W	R/W	R/W	R	R	R	R	R/W

Table 29.22 PIC1AHIZCEN0 Register Contents

Bit Position	Bit Name	Function
7	PIC1AHIZCEN 07	Enables or disables Hi-Z control by ADCD1 error interrupt (INTADCD1ERR). 0: Disabled 1: Enabled
6	PIC1AHIZCEN 06	Enables or disables Hi-Z control by ADCD0 error interrupt (INTADCD0ERR). 0: Disabled 1: Enabled
5	PIC1AHIZCEN 05	Enables or disables Hi-Z control by ERROROUT signal. 0: Disabled 1: Enabled
4 to 1	Reserved	When read, the value after reset is read. When writing, write the value after reset.
0	PIC1AHIZCEN 00	Enables or disables Hi-Z control by TAPA0ESO pin input. 0: Disabled 1: Enabled

CAUTIONS

1. Set this register before starting U/V/W outputs or UB/VB/WB outputs of TAUD0.
2. Set TAPA0CTL0.TAPA0DCN = 0 and TAPA0CTL0.TAPA0DCP = 1 when performing Hi-Z control by ADCD error signal and ERROROUT signal.

29.2.2.13 PIC1AHIZCEN1 — Hi-Z Control Register 1

The PIC1AHIZCEN1 register selects Hi-Z control input signals of TAUD1.

Access: This register can be read/written in 8-bit units.

Address: FFDD 0084_H

Value after reset: 00_H

Bit	7	6	5	4	3	2	1	0
	PIC1AHIZCEN 17	PIC1AHIZCEN 16	PIC1AHIZCEN 15	—	—	—	—	PIC1AHIZCEN 10
Value after reset	0	0	0	0	0	0	0	0
R/W	R/W	R/W	R/W	R	R	R	R	R/W

Table 29.23 PIC1AHIZCEN1 Register Contents

Bit Position	Bit Name	Function
7	PIC1AHIZCEN 17	Enables or disables Hi-Z control by ADCD1 error interrupt (INTADCD1ERR). 0: Disabled 1: Enabled
6	PIC1AHIZCEN 16	Enables or disables Hi-Z control by ADCD0 error interrupt (INTADCD0ERR). 0: Disabled 1: Enabled
5	PIC1AHIZCEN 15	Enables or disables Hi-Z control by ERROROUT signal. 0: Disabled 1: Enabled
4 to 1	Reserved	When read, the value after reset is read. When writing, write the value after reset.
0	PIC1AHIZCEN 10	Enables or disables Hi-Z control by TAPA1ESO pin input. 0: Disabled 1: Enabled

CAUTIONS

1. Set this register before starting U/V/W outputs or UB/VB/WB outputs of TAUD1.
2. Set TAPA1CTL0.TAPA1DCN = 0 and TAPA1CTL0.TAPA1DCP = 1 when performing Hi-Z control by ADCD error signal and ERROROUT signal.

29.2.2.14 PIC1AHIZCEN2 — Hi-Z Control Register 2

The PIC1AHIZCEN2 register selects Hi-Z control input signals of TSG30.

Access: This register can be read/written in 8-bit units.

Address: FFDD 0088_H

Value after reset: 00_H

Bit	7	6	5	4	3	2	1	0
	PIC1AHIZCEN 27	PIC1AHIZCEN 26	PIC1AHIZCEN 25	—	PIC1AHIZCEN 23	—	—	PIC1AHIZCEN 20
Value after reset	0	0	0	0	0	0	0	0
R/W	R/W	R/W	R/W	R	R/W	R	R	R/W

Table 29.24 PIC1AHIZCEN2 Register Contents

Bit Position	Bit Name	Function
7	PIC1AHIZCEN 27	Enables or disables Hi-Z control by ADCD1 error interrupt (INTADCD1ERR). 0: Disabled 1: Enabled
6	PIC1AHIZCEN 26	Enables or disables Hi-Z control by ADCD0 error interrupt (INTADCD0ERR). 0: Disabled 1: Enabled
5	PIC1AHIZCEN 25	Enables or disables Hi-Z control by ERROROUT signal. 0: Disabled 1: Enabled
4	Reserved	When read, the value after reset is read. When writing, write the value after reset.
3	PIC1AHIZCEN 23	Enables or disables Hi-Z control by INTTSG30IER interrupt signal. 0: Disabled 1: Enabled
2, 1	Reserved	When read, these bits are always read as 0. When writing, write 0.
0	PIC1AHIZCEN 20	Enables or disables Hi-Z control by TAPA0ESO pin input. 0: Disabled 1: Enabled

CAUTIONS

1. Set this register before starting TSG30 output.
2. Set TAPA2CTL0.TAPA2DCN = 0 and TAPA2CTL0.TAPA2DCP = 1 when performing Hi-Z control by ADCD error signal, ERROROUT signal, and TSG30 error signal.

29.2.2.15 PIC1AHIZCEN3 — Hi-Z Control Register 3

The PIC1AHIZCEN3 register selects Hi-Z control input signals of TSG31.

Access: This register can be read/written in 8-bit units.

Address: FFDD 008C$_H$

Value after reset: 00$_H$

Bit	7	6	5	4	3	2	1	0
	PIC1AHIZCEN 37	PIC1AHIZCEN 36	PIC1AHIZCEN 35	PIC1AHIZCEN 34	—	—	—	PIC1AHIZCEN 30
Value after reset	0	0	0	0	0	0	0	0
R/W	R/W	R/W	R/W	R/W	R	R	R	R/W

Table 29.25 PIC1AHIZCEN3 Register Contents

Bit Position	Bit Name	Function
7	PIC1AHIZCEN 37	Enables or disables Hi-Z control by ADCD1 error interrupt (INTADCD1ERR) 0: Disabled 1: Enabled
6	PIC1AHIZCEN 36	Enables or disables Hi-Z control by ADCD0 error interrupt (INTADCD0ERR). 0: Disabled 1: Enabled
5	PIC1AHIZCEN 35	Enables or disables Hi-Z control by ERROROUT signal 0: Disabled 1: Enabled
4	PIC1AHIZCEN 34	Enables or disables Hi-Z control by INTTSG31IER interrupt signal. 0: Disabled 1: Enabled
3 to 1	Reserved	When read, the value after reset is read. When writing, write the value after reset.
0	PIC1AHIZCEN 30	Enables or disables Hi-Z control by TAPA1ESO pin input. 0: Disabled 1: Enabled

CAUTION

Set this register before starting TSG31 output.

Set TAPA3CTL0.TAPA3DCN = 0 and TAPA3CTL0.TAPA3DCP = 1 when performing Hi-Z control by ADCD error signal, ERROROUT signal, and TSG31 error signal.

29.2.2.16 PIC1AENCSEL400 — ENCATIN1 Input Select Register 400

The PIC1AENCSEL400 register is used for encoder capture trigger function.

Access: This register can be read/written in 8-bit units.

Address: FFDD $00B8_H$

Value after reset: 00_H

Bit	7	6	5	4	3	2	1	0
	PIC1AENCSEL 4007	—	—	—	PIC1AENCSEL 4003	PIC1AENCSEL 4002	PIC1AENCSEL 4001	PIC1AENCSEL 4000
Value after reset	0	0	0	0	0	0	0	0
R/W	R/W	R	R	R	R/W	R/W	R/W	R/W

Table 29.26 PIC1AENSEL400 Register Contents

Bit Position	Bit Name	Function
7	PIC1AENCSEL 4007	Enables or disables output of INTTAUD0Im signal selected by PIC1AENCSEL400[3:0]. 0: Disabled 1: Enabled
6 to 4	Reserved	When read, the value after reset is read. When writing, write the value after reset.
3 to 0	PIC1AENCSEL 400[3:0]	Select TAUD0TINTm to be used as a capture trigger signal for ENCA0 and ENCA1. 0000: INTTAUD0I0 is selected 0001: INTTAUD0I1 is selected 0010: INTTAUD0I2 is selected 0011: INTTAUD0I3 is selected 0100: INTTAUD0I4 is selected 0101: INTTAUD0I5 is selected 0110: INTTAUD0I6 is selected 0111: INTTAUD0I7 is selected 1000: INTTAUD0I8 is selected 1001: INTTAUD0I9 is selected 1010: INTTAUD0I10 is selected 1011: INTTAUD0I11 is selected 1100: INTTAUD0I12 is selected 1101: INTTAUD0I13 is selected 1110: INTTAUD0I14 is selected 1111: INTTAUD0I15 is selected

29.2.2.17 PIC1AENCSEL410 — ENCATIN1 Input Select Register 410

The PIC1AENCSEL410 register is used for encoder capture trigger function.

Access: This register can be read/written in 8-bit units.

Address: FFDD $00BC_H$

Value after reset: 00_H

Bit	7	6	5	4	3	2	1	0
	PIC1AENCSEL 4107	—	—	—	PIC1AENCSEL 4103	PIC1AENCSEL 4102	PIC1AENCSEL 4101	PIC1AENCSEL 4100
Value after reset	0	0	0	0	0	0	0	0
R/W	R/W	R	R	R	R/W	R/W	R/W	R/W

Table 29.27 PIC1AENCSEL410 Register Contents

Bit Position	Bit Name	Function
7	PIC1AENCSEL 4107	Enables or disables output of INTTAUD1Im signal selected by PIC1AENCSEL410[3:0]. 0: Disabled 1: Enabled
6 to 4	Reserved	When read, the value after reset is read. When writing, write the value after reset.
3 to 0	PIC1AENCSEL 410[3:0]	Select TAUD1TINTm to be used as a capture trigger signal for ENCA0 and ENCA1. 0000: INTTAUD1I0 is selected 0001: INTTAUD1I1 is selected 0010: INTTAUD1I2 is selected 0011: INTTAUD1I3 is selected 0100: INTTAUD1I4 is selected 0101: INTTAUD1I5 is selected 0110: INTTAUD1I6 is selected 0111: INTTAUD1I7 is selected 1000: INTTAUD1I8 is selected 1001: INTTAUD1I9 is selected 1010: INTTAUD1I10 is selected 1011: INTTAUD1I11 is selected 1100: INTTAUD1I12 is selected 1101: INTTAUD1I13 is selected 1110: INTTAUD1I14 is selected 1111: INTTAUD1I15 is selected

29.2.2.18 PIC1AREG200 — Timer Input/Output Control Register 200

The PIC1AREG200 register selects TAUD0 input signals.

Access: This register can be read/written in 32-bit units.

Address: FFDD $00C0_H$

Value after reset: $0000\ 0000_H$

Bit	31	30	29	28	27	26	25	24	23	22	21	20	19	18	17	16
	—	—	—	—	—	—	—	—	—	—	—	—	—	PIC1AREG20018	—	—
Value after reset	0	0	0	0	0	0	0	0	0	0	0	0	0	0	0	0
R/W	R	R	R	R	R	R	R	R	R	R	R	R	R	R/W	R	R

Bit	15	14	13	12	11	10	9	8	7	6	5	4	3	2	1	0
	—	—	—	—	PIC1AREG20011	PIC1AREG20010	PIC1AREG20009	PIC1AREG20008	—	—	—	—	PIC1AREG20003	PIC1AREG20002	PIC1AREG20001	PIC1AREG20000
Value after reset	0	0	0	0	0	0	0	0	0	0	0	0	0	0	0	0
R/W	R	R	R	R	R/W	R/W	R/W	R/W	R	R	R	R	R/W	R/W	R/W	R/W

Table 29.28 PIC1AREG200 Register Contents

Bit Position	Bit Name	Function
31 to 19	Reserved	When read, the value after reset is read. When writing, write the value after reset.
18	PIC1AREG20018	Selects the signal for input as TAUD0TIN10, TAUD0TIN12, and TAUD0TIN14 signals of TAUD0. 1: Select TOUT of TAUD0 CH02 Settings other than above are prohibited.*1
17 to 12	Reserved	When read, the value after reset is read. When writing, write the value after reset.
11, 10	PIC1AREG200 [11:10]	Select the signal for input as TAUD0TIN6, TAUD0TIN7 signals of TAUD0. 10: TSG3 of TS0PTE signal. Settings other than above are prohibited.*1
9, 8	PIC1AREG200 [09:08]	Select the signal for input as TAUD0TIN4, TAUD0TIN5 signals of TAUD0. 10: TSG3 of TS0PTE signal. Settings other than above are prohibited.*1
7 to 4	Reserved	When read, the value after reset is read. When writing, write the value after reset.
3	PIC1AREG20003	Selects the signal for input as TAUD0TIN7 signal of TAUD0. 0: TIN pin input 1: Input signal selected by PIC1AREG20011, PIC1AREG20010 bits (TS0PTE signal).
2	PIC1AREG20002	Selects the signal for input as TAUD0TIN6 signal of TAUD0. 0: TIN pin input 1: Input signal selected by PIC1AREG20011 and PIC1AREG20010 bits (TS0PTE signal).
1	PIC1AREG20001	Selects the signal for input as TAUD0TIN5 signal of TAUD0. 0: TIN pin input 1: Input signal selected by PIC1AREG20009, PIC1AREG20008 bits (TS0PTE signal).
0	PIC1AREG20000	Selects the signal for input as TAUD0TIN4 signal of TAUD0. 0: TIN pin input 1: Input signal selected by PIC1AREG20009 and PIC1AREG20008 bits (TS0PTE signal).

Note 1. Make sure to set any appropriate value when an applicable signal is used. Do not change the value from the value after reset when not used.

29.2.2.19 PIC1AREG210 — Timer Input/Output Control Register 210

The PIC1AREG210 register selects TAUD1 input signals.

Access: This register can be read/written in 32-bit units.

Address: FFDD $00D4_H$

Value after reset: $0000\ 0000_H$

Bit	31	30	29	28	27	26	25	24	23	22	21	20	19	18	17	16
	—	—	—	—	—	—	—	—	—	—	—	—	—	PIC1AREG21018	—	—
Value after reset	0	0	0	0	0	0	0	0	0	0	0	0	0	0	0	0
R/W	R	R	R	R	R	R	R	R	R	R	R	R	R	R/W	R	R

Bit	15	14	13	12	11	10	9	8	7	6	5	4	3	2	1	0
	—	—	—	—	PIC1AREG21011	PIC1AREG21010	PIC1AREG21009	PIC1AREG21008	—	—	—	—	PIC1AREG21003	PIC1AREG21002	PIC1AREG21001	PIC1AREG21000
Value after reset	0	0	0	0	0	0	0	0	0	0	0	0	0	0	0	0
R/W	R	R	R	R	R/W	R/W	R/W	R/W	R	R	R	R	R/W	R/W	R/W	R/W

Table 29.29 PIC1AREG210 Register Contents

Bit Position	Bit Name	Function
31 to 19	Reserved	When read, the value after reset is read. When writing, write the value after reset.
18	PIC1AREG21018	Selects the signal for input as TAUD1TIN10, TAUD1TIN12, and TAUD1TIN14 signals of TAUD1. 1: Select TOUT of TAUD1 CH02 Settings other than above are prohibited.*1
17 to 12	Reserved	When read, the value after reset is read. When writing, write the value after reset.
11, 10	PIC1AREG210 [11:10]	Select the signal for input as TAUD1TIN6 and TAUD1TIN7 signals of TAUD1. 10: TS0PTE signal of TSG31 Settings other than above are prohibited.*1
9, 8	PIC1AREG210 [09:08]	Select the signal for input as TAUD1TIN4 and TAUD1TIN5 signals of TAUD1. 10: TS0PTE signal of TSG31 Settings other than above are prohibited.*1
7 to 4	Reserved	When read, the value after reset is read. When writing, write the value after reset.
3	PIC1AREG21003	Selects the signal for input as TAUD1TIN7 signal of TAUD1. 0: TIN pin input 1: Input signal selected by PIC1AREG21011 and PIC1AREG21010 bits (TS0PTE signal).
2	PIC1AREG21002	Selects the signal for input as TAUD1TIN6 signal of TAUD1. 0: TIN pin input 1: Input signal selected by PIC1AREG21011 and PIC1AREG21010 bits (TS0PTE signal).
1	PIC1AREG21001	Selects the signal for input as TAUD1TIN5 signal of TAUD1. 0: TIN pin input 1: Input signal selected by PIC1AREG21009 and PIC1AREG21008 bits (TS0PTE signal).
0	PIC1AREG21000	Selects the signal for input as TAUD1TIN4 signal of TAUD1. 0: TIN pin input 1: Input signal selected by PIC1AREG21009 and PIC1AREG21008 bits (TS0PTE signal).

Note 1. Make sure to set any appropriate value when an applicable signal is used. Do not change the value from the value after reset when not used

29.2.2.20 PIC1AREG2n1 — Timer Input/Output Control Register 2n1

The PIC1AREG2n1 register selects combination circuit PFN0xx logical operation.

Access: This register can be read/written in 32-bit units.

Address: FFDD $00C4_H$(n = 0), FFDD $00D8_H$(n = 1)

Value after reset: $0000\ 0000_H$

Bit	31	30	29	28	27	26	25	24	23	22	21	20	19	18	17	16
	—	—	—	—	PIC1AREG2n1 27	PIC1AREG2n1 26	PIC1AREG2n1 25	PIC1AREG2n1 24	PIC1AREG2n1 23	PIC1AREG2n1 22	PIC1AREG2n1 21	PIC1AREG2n1 20	PIC1AREG2n1 19	PIC1AREG2n1 18	PIC1AREG2n1 17	PIC1AREG2n1 16
Value after reset	0	0	0	0	0	0	0	0	0	0	0	0	0	0	0	0
R/W	R	R	R	R	R/W	R/W	R/W	R/W	R/W	R/W	R/W	R/W	R/W	R/W	R/W	R/W

Bit	15	14	13	12	11	10	9	8	7	6	5	4	3	2	1	0
	—	—	—	—	—	—	—	—	—	—	—	—	—	—	—	—
Value after reset	0	0	0	0	0	0	0	0	0	0	0	0	0	0	0	0
R/W	R	R	R	R	R	R	R	R	R	R	R	R	R	R	R	R

Table 29.30 PIC1AREG2n1 Register Contents

Bit Position	Bit Name	Function
31 to 28	Reserved	When read, the value after reset is read. When writing, write the value after reset.
27, 26	PIC1AREG2n1 [27:26]	Select PFN045 WO2 output.*1 10: Combination circuit output. 11: Inverted combination circuit output. Settings other than above are prohibited.*2
25, 24	PIC1AREG2n1 [25:24]	Select PFN045 WO1 output.*1 10: Combination circuit output. 11: Inverted combination circuit output. Settings other than above are prohibited.*2
23, 22	PIC1AREG2n1 [23:22]	Select PFCN023 VO2 output.*1 10: Combination circuit output. 11: Inverted combination circuit output. Settings other than above are prohibited.*2
21, 20	PIC1AREG2n1 [21:20]	Select PFN023 VO1 output.*1 10: Combination circuit output. 11: Inverted combination circuit output. Settings other than above are prohibited.*2
19, 18	PIC1AREG2n1 [19:18]	Select PFN001 UO2 output.*1 10: Combination circuit output. 11: Inverted combination circuit output. Settings other than above are prohibited.*2
17, 16	PIC1AREG2n1 [17:16]	Select PFN001 UO1 output.*1 10: Combination circuit output. 11: Inverted combination circuit output. Settings other than above are prohibited.*2
15 to 0	Reserved	When read, the value after reset is read. When writing, write the value after reset.

Note 1. The register value for some functions needs to be set depending on the value of TAUD. For the setting values, see **Section 29.2.3, Function**.

Note 2. Make sure to set any appropriate value when an applicable signal is used. Do not change the value from the value after reset when not used

Block diagram of PFN001 is shown in the following figure.

PFN023 and PFN045 are operated under the same logic with different input signals and registers.

For connection of PFN0xx with peripheral circuits, see **Figure 29.11**.

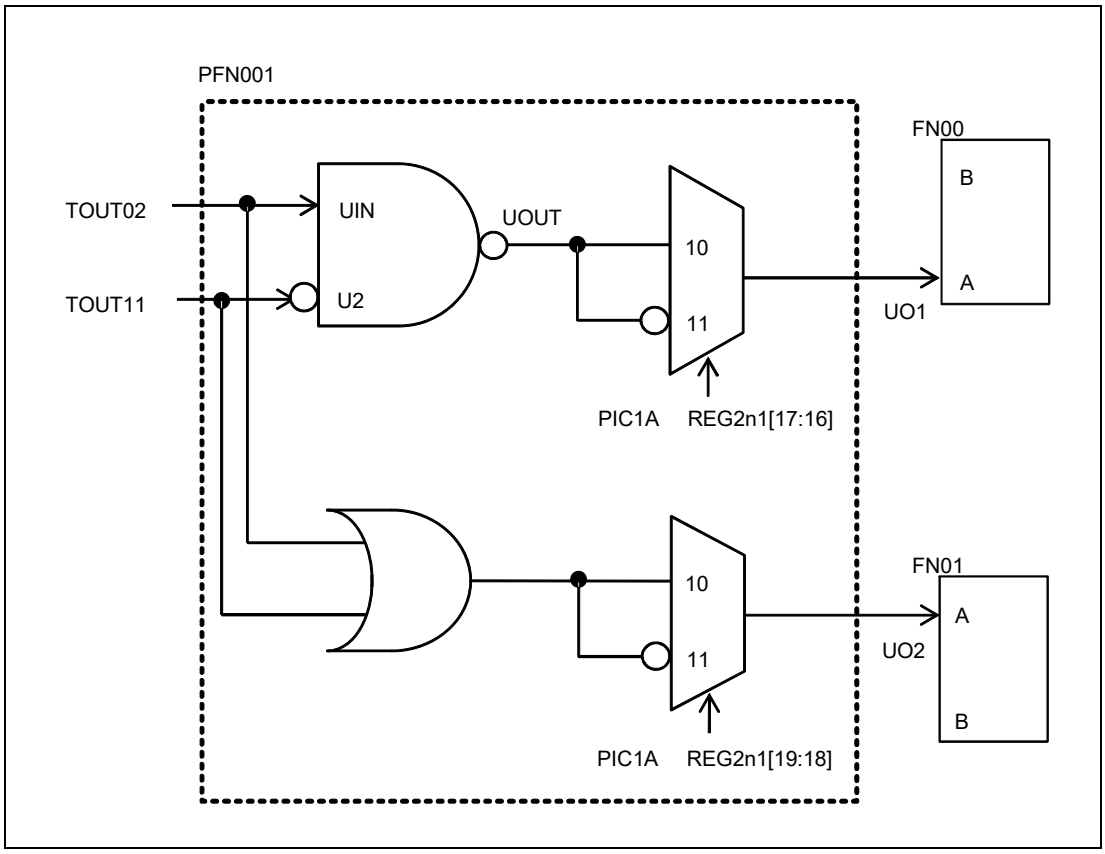

Figure 29.1 Block Diagram of PFN001

29.2.2.21 PIC1AREG2n2 — Timer Input/Output Control Register 2n2

The PIC1AREG2n2 register selects input signals of TAUDn CHm.

Access: This register can be read/written in 32-bit units.

Address: FFDD $00C8_H$ (n=0), FFDD $00DC_H$ (n=1)

Value after reset: $0000\ 0000_H$

Bit	31	30	29	28	27	26	25	24	23	22	21	20	19	18	17	16
	—	—	—	—	PIC1AREG2n2 27	PIC1AREG2n2 26	PIC1AREG2n2 25	PIC1AREG2n2 24	PIC1AREG2n2 23	PIC1AREG2n2 22	PIC1AREG2n2 21	PIC1AREG2n2 20	PIC1AREG2n2 19	PIC1AREG2n2 18	PIC1AREG2n2 17	PIC1AREG2n2 16
Value after reset	0	0	0	0	0	0	0	0	0	0	0	0	0	0	0	0
R/W	R	R	R	R	R/W	R/W	R/W	R/W	R/W	R/W	R/W	R/W	R/W	R/W	R/W	R/W

Bit	15	14	13	12	11	10	9	8	7	6	5	4	3	2	1	0
	—	—	—	—	—	—	—	—	—	—	—	PIC1AREG2n2 04	PIC1AREG2n2 03	PIC1AREG2n2 02	—	—
Value after reset	0	0	0	0	0	0	0	0	0	0	0	0	0	0	0	0
R/W	R	R	R	R	R	R	R	R	R	R	R	R/W	R/W	R/W	R	R

Table 29.31 PIC1AREG2n2 Register Contents (1/2)

Bit Position	Bit Name	Function
31 to 28	Reserved	When read, the value after reset is read. When writing, write the value after reset.
27, 26	PIC1AREG2n2 [27:26]	Select TIN input signal of TAUDnCH15. 00: TIN pin input. 10: Signal selected by PIC1AREG2n204 bit (TOUT of TAUDnCH09). Settings other than above are prohibited.
25, 24	PIC1AREG2n2 [25:24]	Select TIN input signal of TAUDnCH14. 00: TIN pin input 10: Signal selected by PIC1AREG2n018 register bit (TOUT of TAUDnCH02). Settings other than above are prohibited.
23, 22	PIC1AREG2n2 [23:22]	Select TIN input signal of TAUDnCH13. 00: TIN pin input 10: Signal selected by PIC1AREG2n203 bit (TOUT of TAUDn CH07). Settings other than above are prohibited.
21, 20	PIC1AREG2n2 [21:20]	Select TIN input signal of TAUDnCH12. 00: TIN pin input 10: Signal selected by PIC1AREG2n018 register bit (TOUT of TAUDnCH02). Settings other than above are prohibited.
19, 18	PIC1AREG2n2 [19:18]	Select TIN input signal of TAUDnCH11. 00: TIN pin input 10: Signal selected by PIC1AREG2n202 bit (TOUT of TAUDnCH05). Settings other than above are prohibited.
17, 16	PIC1AREG2n2 [17:16]	Select TIN input signal of TAUDnCH10. 00: TIN pin input 10: Signal selected by PIC1AREG2n018 register bit (TOUT of TAUDnCH02). Settings other than above are prohibited
15 to 5	Reserved	When read, the value after reset is read. When writing, write the value after reset.
4	PIC1AREG2n2 04	Selects the signal to be supplied to TIN of TAUDnCH15. 0: TOUT of TAUDnCH09. 1: Set/clear output by TAUDnINT08 and TAUDnINT09.
3	PIC1AREG2n2 03	Selects the signal to be supplied to TIN of TAUDnCH13. 0: TOUT of TAUDnCH07. 1: Set/clear output by TAUDnINT06 and TAUDnINT07.

Table 29.31 PIC1AREG2n2 Register Contents (2/2)

Bit Position	Bit Name	Function
2	PIC1AREG2n2 02	Selects the signal to be supplied to TIN of TAUDnCH11. 0: TOUT of TAUDnCH05. 1: Set/clear output by TAUDnINT04 and TAUDnINT05.
1, 0	Reserved	When read, the value after reset is read. When writing, write the value after reset.

29.2.2.22 PIC1AREG2n3 — Timer Input/Output Control Register 2n3

The PIC1AREG2n3 register selects logical operation for the combination circuit FN0i.

Access: This register can be read/written in 32-bit units.

Address: FFDD $00CC_H$ (n = 0), FFDD $00E0_H$ (n =1)

Value after reset: $0000\ 0000_H$

Bit	31	30	29	28	27	26	25	24	23	22	21	20	19	18	17	16
	—	—	—	—	—	—	—	—	—	PIC1AREG2n3 22	PIC1AREG2n3 21	PIC1AREG2n3 20	—	PIC1AREG2n3 18	PIC1AREG2n3 17	PIC1AREG2n3 16
Value after reset	0	0	0	0	0	0	0	0	0	0	0	0	0	0	0	0
R/W	R	R	R	R	R	R	R	R	R	R/W	R/W	R/W	R	R/W	R/W	R/W

Bit	15	14	13	12	11	10	9	8	7	6	5	4	3	2	1	0
	—	PIC1AREG2n3 14	PIC1AREG2n3 13	PIC1AREG2n3 12	—	PIC1AREG2n3 10	PIC1AREG2n3 09	PIC1AREG2n3 08	—	PIC1AREG2n3 06	PIC1AREG2n3 05	PIC1AREG2n3 04	—	PIC1AREG2n3 02	PIC1AREG2n3 01	PIC1AREG2n3 00
Value after reset	0	0	0	0	0	0	0	0	0	0	0	0	0	0	0	0
R/W	R	R/W	R/W	R/W	R	R/W	R/W	R/W	R	R/W	R/W	R/W	R	R/W	R/W	R/W

Table 29.32 PIC1AREG2n3 Register Contents (1/2)

Bit Position	Bit Name	Function
31 to 23	Reserved	When read, the value after reset is read. When writing, write the value after reset.
22 to 20	PIC1AREG2n3 [22:20]	Select a logical operation to be performed on input signals A and B.*1 000: A 100: A and B 101: A or B Settings other than above are prohibited.
19	Reserved	When read, the value after reset is read. When writing, write the value after reset.
18 to 16	PIC1AREG2n3 [18:16]	Select a logical operation to be performed on input signals A and B.*1 000: A 100: A and B 101: A or B Settings other than above are prohibited.
15	Reserved	When read, the value after reset is read. When writing, write the value after reset.
14 to 12	PIC1AREG2n3 [14:12]	Select a logical operation to be performed on input signals A and B.*1 000: A 100: A and B 101: A or B Settings other than above are prohibited.
11	Reserved	When read, the value after reset is read. When writing, write the value after reset.

Table 29.32 PIC1AREG2n3 Register Contents (2/2)

Bit Position	Bit Name	Function
10 to 8	PIC1AREG2n3 [10:08]	Select a logical operation to be performed on input signals A and B.*1 000: A 100: A and B 101: A or B Settings other than above are prohibited.
7	Reserved	When read, the value after reset is read. When writing, write the value after reset.
6 to 4	PIC1AREG2n3 [06:04]	Select a logical operation to be performed on input signals A and B.*1 000: A 100: A and B 101: A or B Settings other than above are prohibited.
3	Reserved	When read, the value after reset is read. When writing, write the value after reset.
2 to 0	PIC1AREG2n3 [02:00]	Select a logical operation to be performed on input signals A and B.*1 000: A 100: A and B 101: A or B Settings other than above are prohibited.

Note 1. The register value for some functions needs to be set depending on the value of TAUD. For the setting values, see **Section 29.2.3, Function**.

Block diagram of FN00 is shown in the following figure.

FN01 to FN05 are operated under the same logical with different input signals and registers.

For connection of FN0i with peripheral circuits, see **Figure 29.11**.

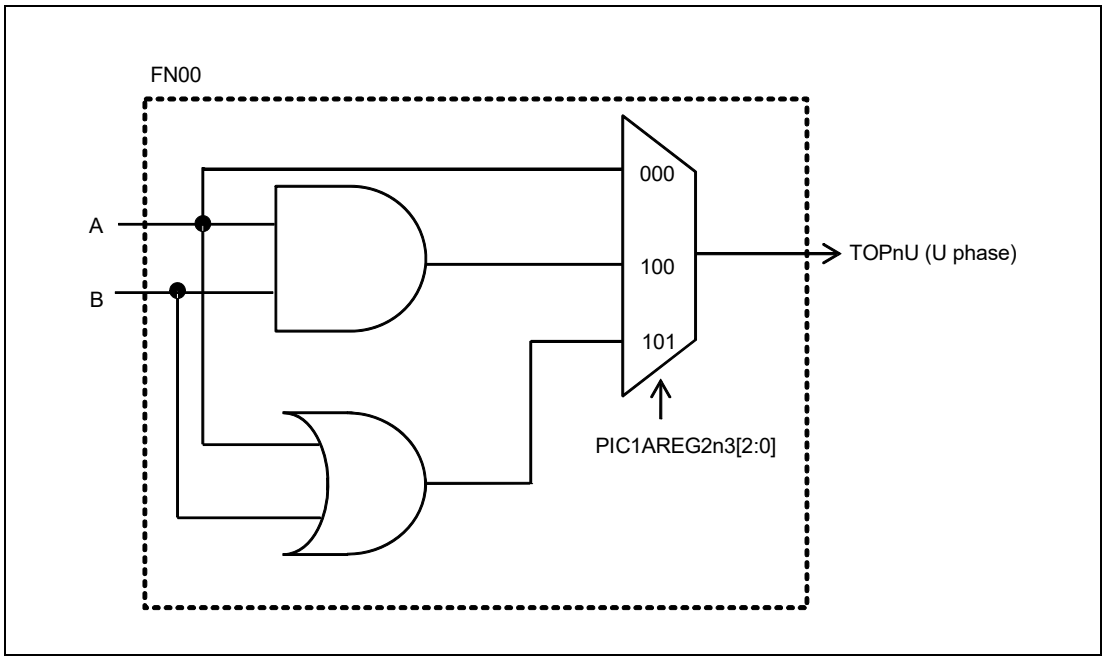

Figure 29.2 Block Diagram of FN00

29.2.2.23 PIC1AREG30 — Timer Input/Output Control Register 30

The PIC1AREG30 register selects ENCAn input signals.

Access: This register can be read/written in 32-bit units.

Address: FFDD $00E8_H$

Value after reset: $0000\ 0000_H$

Bit	31	30	29	28	27	26	25	24	23	22	21	20	19	18	17	16
	—	—	—	—	—	—	—	—	—	PIC1AREG3022	PIC1AREG3021	PIC1AREG3020	PIC1AREG3019	PIC1AREG3018	PIC1AREG3017	PIC1AREG3016
Value after reset	0	0	0	0	0	0	0	0	0	0	0	0	0	0	0	0
R/W	R	R	R	R	R	R	R	R	R	R/W	R/W	R/W	R/W	R/W	R/W	R/W

Bit	15	14	13	12	11	10	9	8	7	6	5	4	3	2	1	0
	PIC1AREG3015	PIC1AREG3014	PIC1AREG3013	PIC1AREG3012	PIC1AREG3011	PIC1AREG3010	PIC1AREG3009	PIC1AREG3008	PIC1AREG3007	PIC1AREG3006	PIC1AREG3005	PIC1AREG3004	PIC1AREG3003	PIC1AREG3002	PIC1AREG3001	PIC1AREG3000
Value after reset	0	0	0	0	0	0	0	0	0	0	0	0	0	0	0	0
R/W	R/W	R/W	R/W	R/W	R/W	R/W	R/W	R/W	R/W	R/W	R/W	R/W	R/W	R/W	R/W	R/W

Table 29.33 PIC1AREG30 Register Contents (1/2)

Bit Position	Bit Name	Function
31 to 23	Reserved	When read, the value after reset is read. When writing, write the value after reset.
22	PIC1AREG3022	Selects the input pins (ENCA0E0, ENCA0E1, ENCA0EC) of ENCA0 timer. 0: The signal selected by PIC1AREG3000 (ENCA0E0), PIC1AREG3001 (ENCA0E1), and PIC1AREG3017-16 (ENCA0EC) 1: The signal selected by PIC1AREG3020 and PIC1AREG3019
21	PIC1AREG3021	Selects the signal to be supplied to PIC1AREG3012 to 15. 0: ENCA1I1 (signal 1 of the ENCA1 external pin) 1: The signal selected by the PIC1AENCSEL4107 bit of the PIC1AENCSEL410 register.
20,19	PIC1AREG2n3 [20:19]	Select the input pins (ENCA1E0, ENCA1E1, ENCA1EC) of ENCA1 timer. 00: The ENCA1E0, ENCA1E1, ENCA1EC input pins of ENCA1 timer. Settings other than above are prohibited.
18	PIC1AREG3018	Selects the signal to be supplied to PIC1AREG3002 to 05. 0: ENCA0I1 (signal 1 of ENCA0 external pin) 1: The signal selected by the PIC1AENCSEL4007 bit of the PIC1AENCSEL400 register.
17, 16	PIC1AREG30 [17:16]	Select the input pins (ENCA0E0, ENCA0E1, ENCA0EC) of ENCA0 timer. 00: The ENCA0E0, ENCA0E1, ENCA0EC input pins of ENCA0 timer. Settings other than above are prohibited.
15 to 12	PIC1AREG30 [15:12]	Select the signal for input as the ENCAT1TIN1 signal. 0: The signal selected by PIC1AREG3021. 1: The signal selected by PIC1AREG3018. 2: ADCD0TRG4 3: ADCD0TRG3 4: ADCD0TRG2 5: ADCD0TRG1 6: ADCD0TRG0 7: ADCD1TRG4 8: ADCD1TRG3 9: ADCD1TRG2 10: ADCD1TRG1 11 : ADCD1TRG0 Settings other than above are prohibited.

Table 29.33 PIC1AREG30 Register Contents (2/2)

Bit Position	Bit Name	Function
11, 10	PIC1AREG30 [11:10]	Select the ENCAEC pin input of timer ENCA1. 00: The signal selected by the PIC1AREG3019 and PIC1AREG3020 bits. 10: The signal selected by the PIC1AREG3016 and PIC1AREG3017 bits. 11: ENCA0EQ1 signal (ENCA0 timer) Settings other than above are prohibited
9, 8	PIC1AREG30 [09:08]	Select the ENCA1E1 pin input of timer ENCA1. 00: Signal selected by the PIC1AREG3019 and PIC1AREG3020 bits. 01: The signal selected by the PIC1AREG3016 and PIC1AREG3017 bits. 10: TS1PUD signal of TSG31. Settings other than above are prohibited.
7, 6	PIC1AREG30 [07:06]	Select the ENCA1E0 pin input of timer ENCA1. 00: The signal selected by the PIC1AREG3019 and PIC1AREG3020 bits. 01: The signal selected by the PIC1AREG3016 and PIC1AREG3017 bits. 10: TS1PEC signal of TSG31. Settings other than above are prohibited
5 to 2	PIC1AREG30 [05:02]	Select the signal for input as the ENCAT0TIN1 signal. 0: The signal selected by the PIC1AREG3018 bit. 1: The signal selected by the PIC1AREG3021 bit. 2: ADCD0TRG4 3: ADCD0TRG3 4: ADCD0TRG2 5: ADCD0TRG1 6: ADCD0TRG0 7: ADCD1TRG4 8: ADCD1TRG3 9: ADCD1TRG2 10: ADCD1TRG1 11 : ADCD1TRG0 Settings other than above are prohibited.
1	PIC1AREG3001	Selects the signal to input to the ENCA0E1 internal signal. 0: Signal selected by PIC1AREG3017 and PIC1AREG3016. 1: TS0PUD signal of TSG30.
0	PIC1AREG3000	Selects the signal to input to the ENCA0E0 internal input signal. 0: Signal selected by PIC1AREG3017 and PIC1AREG3016. 1: TS0PEC signal of TSG30.

29.2.2.24 PIC1AREG31 — Timer Input/Output Control Register 31

The PIC1AREG31 register selects TAUDn and TAUJ0 input signals.

Access: This register can be read/written in 32-bit units.

Address: FFDD $00EC_H$

Value after reset: $0000\ 0000_H$

Bit	31	30	29	28	27	26	25	24	23	22	21	20	19	18	17	16
	—	—	—	—	—	—	—	—	—	PIC1AREG3122	PIC1AREG3121	PIC1AREG3120	PIC1AREG3119	PIC1AREG3118	PIC1AREG3117	PIC1AREG3116
Value after reset	0	0	0	0	0	0	0	0	0	0	0	0	0	0	0	0
R/W	R	R	R	R	R	R	R	R	R	R/W	R/W	R/W	R/W	R/W	R/W	R/W

Bit	15	14	13	12	11	10	9	8	7	6	5	4	3	2	1	0
	PIC1AREG3115	—	PIC1AREG3113	PIC1AREG3112	PIC1AREG3111	PIC1AREG3110	PIC1AREG3109	PIC1AREG3108	PIC1AREG3107	PIC1AREG3106	—	PIC1AREG3104	PIC1AREG3103	—	PIC1AREG3101	PIC1AREG3100
Value after reset	0	0	0	0	0	0	0	0	0	0	0	0	0	0	0	0
R/W	R/W	R	R/W	R/W	R/W	R/W	R/W	R/W	R/W	R/W	R	R/W	R/W	R	R/W	R/W

Table 29.34 PIC1AREG31 Register Contents (1/2)

Bit Position	Bit Name	Function
31 to 23	Reserved	When read, the value after reset is read. When writing, write the value after reset.
22, 21	PIC1AREG31 [22:21]	Select TIN input signal of TAUD1CH02. 00: TIN pin input 01: DT output signal of ENCAT1EQ0 Settings other than above are prohibited.
20	PIC1AREG3120	Selects TIN input signal of TAUD1CH01. 0: TIN pin input 1: The signal selected by PIC1AREG3115 to PIC1AREG3117.
19, 18	PIC1AREG31 [19:18]	Select TIN input signal of TAUD1CH00. 00: The signal selected by PIC1AREG3115 to PIC1AREG3117. 10: DT output signal of ENCAT1EQ0 Settings other than above are prohibited.
17 to 15	PIC1AREG31 [17:15]	Select TIN input signal of TAUD1CH00 and TAUD1CH01. 000: TIN pin input. 001: DT output signal of ENCAT1EQ1 Settings other than above are prohibited.
14	Reserved	When read, the value after reset is read. When writing, write the value after reset.
13, 12	PIC1AREG31 [13:12]	Select TIN input signal of TAUD0CH02. 00: TIN pin input. 10: DT output signal of ENCAT0EQ0 Settings other than above are prohibited.
11	PIC1AREG3111	Selects TIN input signal of TAUD0CH01. 0: TIN pin input. 1: The signal selected by PIC1AREG3106 to PIC1AREG3108.
10, 9	PIC1AREG31 [10:09]	Select TIN input signal of TAUD0CH00. 00: The signal selected by PIC1AREG3106 to PIC1AREG3108. 10: DT output signal of ENCAT0EQ0 Settings other than above are prohibited.
8 to 6	PIC1AREG31 [08:06]	Select TIN input signal of TAUD0CH00 and TAUD0CH01. 000: TIN pin input 001: DT output signal of ENCAT0EQ1 Settings other than above are prohibited.

Table 29.34 PIC1AREG31 Register Contents (2/2)

Bit Position	Bit Name	Function
5	Reserved	When read, the value after reset is read. When writing, write the value after reset.
4	PIC1AREG3104	Selects TIN input signal of TAUJ0CH03. 0: TIN pin input. 1: DT output signal of ENCAT1IEC.
3	PIC1AREG3103	Selects TIN input signal of TAUJ0CH02. 0: TIN pin input. 1: DT output signal of ENCAT1IEC
2	Reserved	When read, the value after reset is read. When writing, write the value after reset.
1	PIC1AREG3101	Selects TIN input signal of TAUJ0CH01. 0: TIN pin input. 1: DT output signal of ENCAT0IEC
0	PIC1AREG3100	Selects TIN input signal of TAUJ0CH00. 0: TIN pin input. 1: DT output signal of ENCAT0IEC

29.2.2.25 PIC1AREG50 — Timer Input/Output Control Register 50

The PIC1AREG50 register selects TSG30 input signals.

Access: This register can be read/written in 16-bit units.

Address: FFDD 00F8$_H$

Value after reset: 0000$_H$

Bit	15	14	13	12	11	10	9	8	7	6	5	4	3	2	1	0
	—	—	—	—	—	PIC1AREG5010	—	PIC1AREG5008	PIC1AREG5007	PIC1AREG5006	PIC1AREG5005	—	—	—	—	PIC1AREG5000
Value after reset	0	0	0	0	0	0	0	0	0	0	0	0	0	0	0	0
R/W	R	R	R	R	R	R/W	R	R/W	R/W	R/W	R/W	R	R	R	R	R/W

Table 29.35 PIC1AREG50 Register Contents

Bit Position	Bit Name	Function
15 to 11	Reserved	When read, the value after reset is read. When writing, write the value after reset.
10	PIC1AREG5010	Selects the signal for input as the TSG30TSTOPC0 signal of the TSG30 timer. 0: INTENCA1I1 input of the ENCA1 timer 1: Setting prohibited.
9	Reserved	When read, the value after reset is read. When writing, write the value after reset.
8	PIC1AREG5008	Selects the signal for input as the TSG30TSTOPC0 signal of the TSG30 timer. 0: INTENCA0I1 input of the ENCA0 timer 1: Setting prohibited.
7	PIC1AREG5007	Selects the signal for input as the TS0OPCI1 signal of the TSG30 timer. 0: INTTAUD0I7 input of the TAUD 1: Setting prohibited.
6, 5	PIC1AREG50 [06:05]	Select the signal for input as the TSG30TSTOPS (TS0OPCI0) signal of the TSG30 timer. 01: The signal selected by the PIC1AREG5008 bit 10: The signal selected by the PIC1AREG5010 bit 11: INTTAUD0I5 output signal of TAUD0. Settings other than above are prohibited.*1
4 to 1	Reserved	When read, the value after reset is read. When writing, write the value after reset.
0	PIC1AREG5000	Switches the ENCA signal and external hall sensor signal. For the note on selection of the signals, see Note 1 of **Section 29.2.2.9, PIC1ATSGHALLSEL — Hall Sensor Input Select Register**. 0: Select the pin input ENCA0E0, ENCA0E1, ENCA0EC. 1: Setting prohibited.

Note 1. Make sure to set any appropriate value when an applicable signal is used. Do not change the value from the value after reset when not used

29.2.2.26 PIC1AREG51 — Timer Input/Output Control Register 51

The PIC1AREG51 register selects TSG31 input signals.

Access: This register can be read/written in 16-bit units.

Address: FFDD $00FC_H$

Value after reset: 0000_H

Bit	15	14	13	12	11	10	9	8	7	6	5	4	3	2	1	0
	—	—	—	—	—	PIC1AREG5110	—	PIC1AREG5108	PIC1AREG5107	PIC1AREG5106	PIC1AREG5105	—	—	—	—	PIC1AREG5100
Value after reset	0	0	0	0	0	0	0	0	0	0	0	0	0	0	0	0
R/W	R	R	R	R	R	R/W	R	R/W	R/W	R/W	R/W	R	R	R	R	R/W

Table 29.36 PIC1AREG51 Register Contents

Bit Position	Bit Name	Function
15 to 11	Reserved	When read, the value after reset is read. When writing, write the value after reset.
10	PIC1AREG5110	Selects the signal for input as the TSG31TSTOPC0 signal from the TSG31 timer. 0: INTENCA1I1 input signal of the ENCA1 timer 1: Setting prohibited.
9	Reserved	When read, the value after reset is read. When writing, write the value after reset.
8	PIC1AREG5108	Selects the signal for input as the TSG31TSTOPC0 signal from TSG31 timer. 0: INTENCA0I1 input signal of the ENCA0 timer 1: Setting prohibited.
7	PIC1AREG5107	Selects the signal for input as the TS0OPCI1 signal from TSG31 timer. 0: The INTTAUD1I7 signal input of the TAUD1 timer. 1: Setting prohibited.
6, 5	PIC1AREG51 [06:05]	Select the signal for input as the TSG31TSTOPS (TS1OPCI0) signal from TSG31 timer. 01: The signal selected by the PIC1AREG5108 bit. 10: The signal selected by the PIC1AREG5110 bit. 11: The INTTAUD1I5 output of the TAUD1. Settings other than above are prohibited.*1
4 to 1	Reserved	When read, the value after reset is read. When writing, write the value after reset.
0	PIC1AREG5100	Switches the ENCA signal and external hall sensor signal. For the note on selection of the signals, see Note 1 of **Section 29.2.2.9, PIC1ATSGHALLSEL — Hall Sensor Input Select Register**. 1: Select the pin input ENCA1E0, ENCA1E1, ENCA1EC. Settings other than above are prohibited.*1

Note 1. Make sure to set any appropriate value when an applicable signal is used. Do not change the value from the value after reset when not used

29.2.2.27 POMONSEL — Port Output Monitor Select Register

The POMONSEL register selects the channels to monitor output of TAUD0, TAUD1, TSG30, TSG31, OSTM0, and OSTM1 timers using TAUD2.

Access: This register can be read/written in 8-bit units.

Address: FFDD 7400_H

Value after reset: 00_H

Bit	7	6	5	4	3	2	1	0
	—	—	—	—	—	POMONSEL2	POMONSEL1	POMONSEL0
Value after reset	0	0	0	0	0	0	0	0
R/W	R	R	R	R	R	R/W	R/W	R/W

Table 29.37 POMONSEL Register Contents

Bit Position	Bit Name	Function
7 to 3	Reserved	When read, the value after reset is read. When writing, write the value after reset.
2 to 0	POMONSEL [2:0]	Select the input pin to monitor. For the selectable input pins, see **Table 29.38**.

Table 29.38 Selectable Input Pins to be Monitored by the POMONSEL Register

POMONSEL setting	000	001	010	011	100
ch0	Port (TAUD2I0)	TAUD0 ch1	TAUD0 ch0	TAUD1 ch0*1	TSG30 ch1
ch1	Port (TAUD2I1)	TAUD0 ch3	TAUD0 ch1	TAUD1 ch1*1	TSG30 ch2
ch2	Port (TAUD2I2)	TAUD0 ch5	TAUD0 ch2	TAUD1 ch2*1	TSG30 ch3
ch3	Port (TAUD2I3)	TAUD0 ch7	TAUD0 ch3	TAUD1 ch3*1	TSG30 ch4
ch4	Port (TAUD2I4)	TAUD0 ch9	TAUD0 ch4	TAUD1 ch4*1	TSG30 ch5
ch5	Port (TAUD2I5)	TAUD0 ch11	TAUD0 ch5	TAUD1 ch5*1	TSG30 ch6
ch6	Port (TAUD2I6)	TAUD0 ch13	TAUD0 ch6	TAUD1 ch6*1	TSG31 ch1
ch7	Port (TAUD2I7)	TAUD0 ch15	TAUD0 ch7	TAUD1 ch7*1	TSG31 ch2
ch8	Port (TAUD2I8)	TAUD1 ch1*1	TAUD0 ch8	TAUD1 ch8	TSG31 ch3
ch9	Port (TAUD2I9)	TAUD1 ch3*1	TAUD0 ch9	TAUD1 ch9	TSG31 ch4
ch10	Port (TAUD2I10)	TAUD1 ch5*1	TAUD0 ch10	TAUD1 ch10	TSG31 ch5
ch11	Port (TAUD2I11)	TAUD1 ch7*1	TAUD0 ch11	TAUD1 ch11	TSG31 ch6
ch12	Port (TAUD2I12)	TAUD1 ch9	TAUD0 ch12	TAUD1 ch12	—
ch13	Port (TAUD2I13)	TAUD1 ch11	TAUD0 ch13	TAUD1 ch13	—
ch14	Port (TAUD2I14)	TAUD1 ch13	TAUD0 ch14	TAUD1 ch14	OSTM0
ch15	Port (TAUD2I15)	TAUD1 ch15	TAUD0 ch15	TAUD1 ch15	OSTM1

Note 1. The timer output monitor function can be used in case of the following pins is used as timer output.
P2_11 to P2_14 is available in devices with 144-pin.
TAUD100: P3_3, P2_11
TAUD101: P3_3, P2_11
TAUD102: P3_4, P2_12
TAUD103: P3_4, P2_12
TAUD104: P2_13
TAUD105: P2_13
TAUD106: P2_14
TAUD107: P2_14

29.2.2.28 PIMONSEL — Port Input Monitor Select Register

The PIMONSEL register monitors timer input.

Access: This register can be read/written in 8-bit units.

Address: FFDD 7000_H

Value after reset: 00_H

Bit	7	6	5	4	3	2	1	0
	—	—	—	—	—	—	PIMONSEL1	PIMONSEL0
Value after reset	0	0	0	0	0	0	0	0
R/W	R	R	R	R	R	R	R/W	R/W

Table 29.39 PIMONSEL Register Contents

Bit Position	Bit Name	Function
7 to 2	Reserved	When read, the value after reset is read. When writing, write the value after reset.
1, 0	PIMONSEL[1:0]	Select the input pin to monitor. For the selectable input pins, see **Table 29.40**.

Table 29.40 Selectable Input Pins to be Monitored by the PIMONSEL Register

PIMONSEL Setting	00	01	10
ch0	Port (TAUJ2I0)	TAUJ0 ch0	TAUJ1 ch0
ch1	Port (TAUJ2I1)	TAUJ0 ch1	TAUJ1 ch1
ch2	Port (TAUJ2I2)	TAUJ0 ch2	TAUJ1 ch2
ch3	Port (TAUJ2I3)	TAUJ0 ch3	TAUJ1 ch3

29.2.2.29 SELBSSER — Synchronous Clear Enable Register

Access: This register can be read/written in 8-bit units.

Address: FFDD 2000_H

Value after reset: 00_H

Bit	7	6	5	4	3	2	1	0
	—	—	—	—	—	SELBSSER[2:0]		
Value after reset	0	0	0	0	0	0	0	0
R/W	R	R	R	R	R	R/W	R/W	R/W

Table 29.41 SELBSSER Register Contents

Bit Position	Bit Name	Function
7 to 3	Reserved	When read, the value after reset is read. When writing, write the value after reset.
2 to 0	SELBSSER[2:0]	

SELBSSER[2:0]	Setting for TSG3 Synchronous Clearing
000_B	TSG30: Disabled TSG31: Disabled
001_B	TSG30: INTTAUD0I14 enabled TSG31: Disabled
010_B	TSG30: Disabled TSG31: INTTAUD0I15 enabled
011_B	TSG30: INTTAUD0I14 enabled TSG31: INTTAUD0I15 enabled
100_B	TSG30: INTTAUD0I15 enabled TSG31: INTTAUD0I15 enabled
Other than above	Setting prohibited

CAUTIONS

1. Using the synchronous clearing and simultaneous starting trigger functions for TSG3 at the same time is prohibited. If you are using synchronous clearing of TSG3, only use the simultaneous start trigger function after counting starts. After counting has started, set the bits of the simultaneous start control register listed below to 0.
   - PIC1SSER0.PIC1ASSER014 (TAUD0 channel 14)
   - PIC1SSER0.PIC1ASSER015 (TAUD0 channel 15)
   - PIC1SSER2.PIC1ASSER208 (TSG30)
   - PIC1SSER2.PIC1ASSER209 (TSG31)

   To start TSG30 and TSG31, and TAUD0 channels 14 and 15 simultaneously while synchronous clearing of TSG3 is in use, disable synchronous clearing of TSG3 before using the simultaneous start trigger function.

   Switching of the above setting while the trigger for synchronous clearing or simultaneous starting of TSG3 is active is prohibited.
2. Writing in the following ways to SSER during counter operation are prohibited.
   - Writing a value other than 000_B or the setting at the start of operation.
   - Writing a value at the time of an interrupt for TAUD0 channel 14 or 15.

29.2.3 Function

29.2.3.1 Simultaneous Start Trigger Function

(1) Overview

The function allows any combination of timers (TAUDn, TAUJn, TSG3n, TPBAn, OSTMn, and ENCAn) to be started simultaneously.

(2) Configuration

The timers which support simultaneous start trigger function are listed as follows.

- TAUDn
- TAUJn
- TSG3n
- TPBAn
- OSTMn
- ENCAn

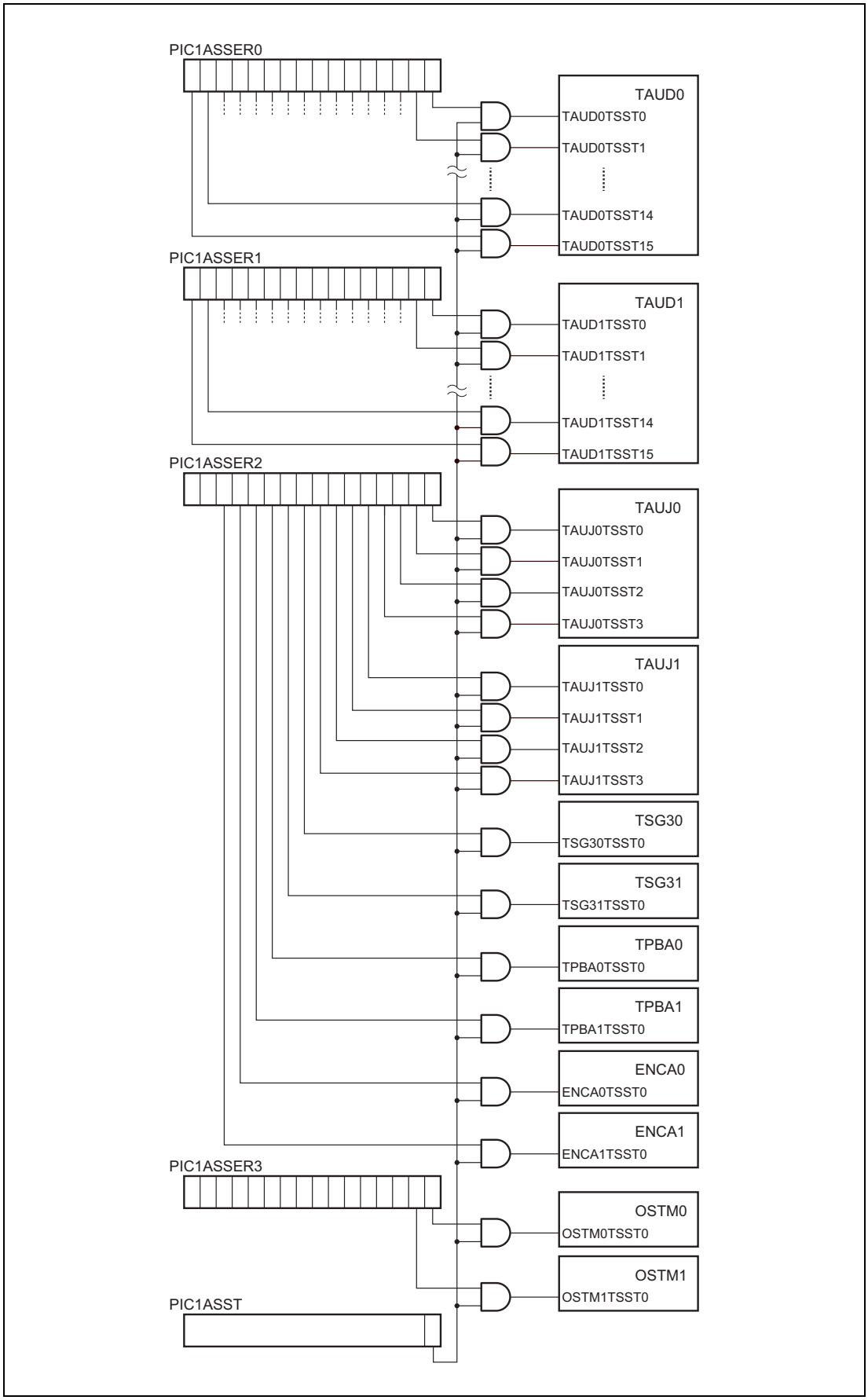

Figure 29.3 Block Diagram of Simultaneous Start Trigger Function

Set 1 to the PIC1ASYNCTRG bit of the simultaneous start trigger control register (PIC1ASST) after unmasking the target timers. The timer operations start by active signal input to the start trigger of each timer.

(3) Registers

The PIC1A registers set by this function is listed as follows. For setting value of the registers, see **Section 29.2.2.2** to **Section 29.2.2.6.**

- PIC1A registers to be set
  PIC1ASST
  PIC1ASSER0
  PIC1ASSER1
  PIC1ASSER2
  PIC1ASSER3

(4) Function

The function allows any combination of timers (TAUDn, TAUJn, TSG3n, TPBAn, OSTMn, and ENCAn) to be started simultaneously.

(5) Flow Chart

The following figure shows the setting flow of this function.

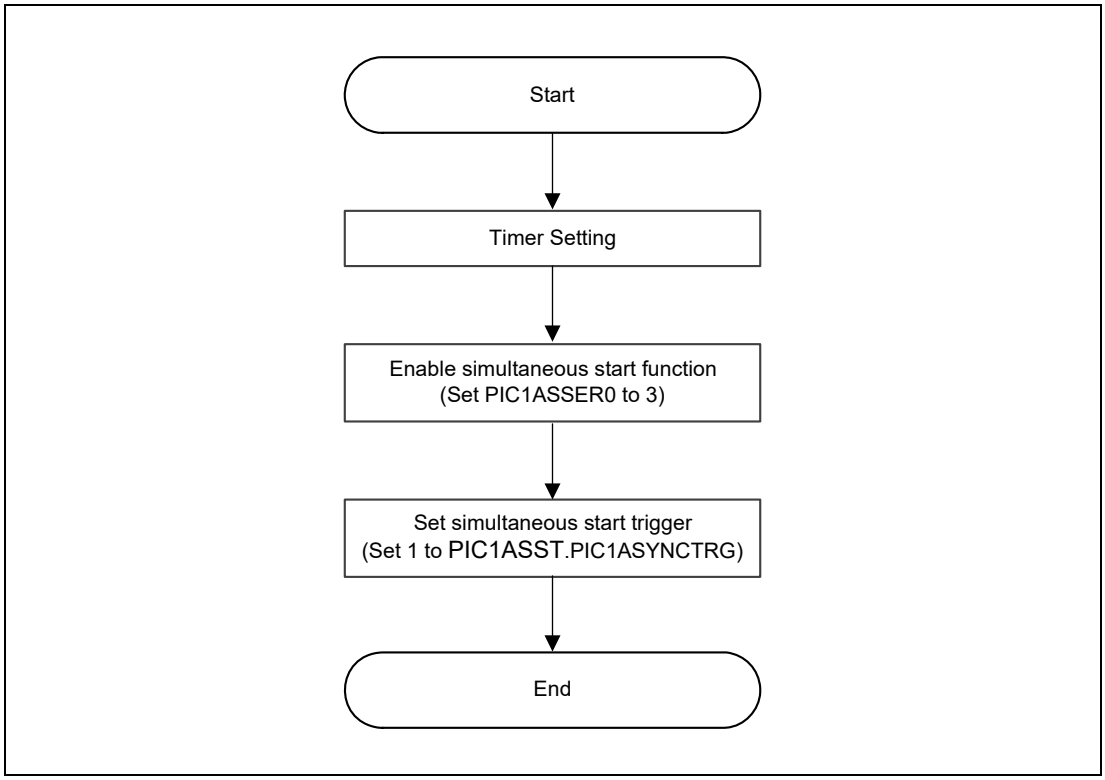

Figure 29.4 Setting Flow

Setting procedures are described as follows.

- Timer setting
  Set the timers to start simultaneously.
- Enable simultaneous start function
  Set 1 to the applicable bits of the PIC1ASSER0, PIC1ASSER1, PIC1ASSER2, and PIC1ASSER3 registers to enable simultaneous start of timers.
- Set simultaneous start trigger
  Setting 1 to the PIC1ASYNCTRG bit of the simultaneous start trigger control register (PIC1ASST) simultaneously starts the timers.

29.2.3.2 PWM Output Function with Dead Time

(1) Overview

This function generates and outputs PWM waveforms with the dead time from one phase to three phases using TAUDn.

The PWM output function of TAUD sets only the clear timing in a period under the duty ratio specification. On the other hand, this function can specify the set timing in addition to the clear timing to output more flexible PWM waveforms with the dead time.

The following table lists the number of channels used.

PWM Output with Dead Time	Number of TAUDn Channels
One-phase PWM output (U phase/UB phase)	5 channels (master channel: 1, slave channel: 4)
Two-phase PWM output (U phase/UB phase, V phase/VB phase)	9 channels (master channel: 1, slave channel: 8)
Three-phase PWM output (U phase/UB phase, V phase/VB phase, W phase/WB phase)	13 channels (master channel: 1, slave channel: 12)

Note: Above are examples of combination.

Usages of each channel of TAUDn are listed in the following table. CH2 is used as the master channel.

TAUDn Channel	U phase / UB phase	V phase / VB phase	W phase / WB phase	Usage
CH0	—	—	—	Not used
CH1	—	—	—	Not used
CH2	√	√	√	Carrier period (common to each phase)
CH3	—	—	—	Not used
CH4	√	—	—	Duty (U phase setting)
CH5	√	—	—	Duty (U phase clearing)
CH6	—	√	—	Duty (V phase setting)
CH7	—	√	—	Duty (V phase clearing)
CH8	—	—	√	Duty (W phase setting)
CH9	—	—	√	Duty (W phase clearing)
CH10	√	—	—	U phase output (TOUT10)
CH11	√	—	—	UB phase output (TOUT11)
CH12	—	√	—	V phase output (TOUT12)
CH13	—	√	—	VB phase output (TOUT13)
CH14	—	—	√	W phase output (TOUT14)
CH15	—	—	√	WB phase output (TOUT15)

Note: √: Used; —: Not used

(2) Configuration

The PWM output function with the dead time is realized by using the PWM output function/one-phase output PWM function of TAUDn and PIC1A in combination. The following figure shows the block diagram of the PWM output function with the dead time.

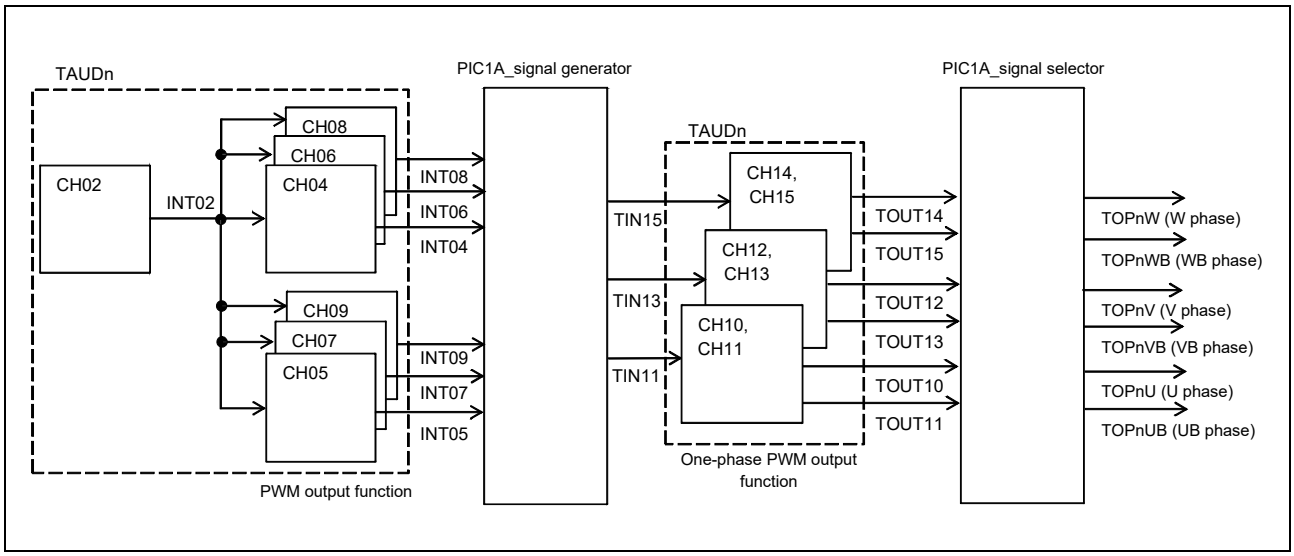

Figure 29.5 Block Diagram of PWM Output Function with Dead Time

The configuration of this function is described as follows using the PWM output of U phase/UB phase as an example.

- [TAUDn] PWM output function
  CH02, CH04, and CH05 are used in combination. Setting the period, U phase set value, and U phase clear value to CDR02, CDR04, and CDR05, respectively generates the set and clear PWM signals (INT04 and INT05).
- [PIC1A_signal generator] RS flip-flop circuit (RSn2)
  Selecting the INT04 and INT05 inputs allows TIN11 (PWM signal) to be generated.
- [TAUDn] One-phase PWM output function
  CH10 and CH11 are used in combination. Setting the dead time value to CDR11, and inserting dead time into the PWM signal to be input to TIN11 allows TOUT10 (U phase PWM signal) and TOUT11 (UB phase PWM signal) to be output.
- [PIC1A_signal selector]
  TOUT10 and TOUT11 inputs are selected and output to TOPnU and TOPnUB pins, respectively.

Similar configuration is applied to V phase/VB phase and W phase/WB phase.

(3) Registers

The block diagram of PIC1A is shown in the following figure.

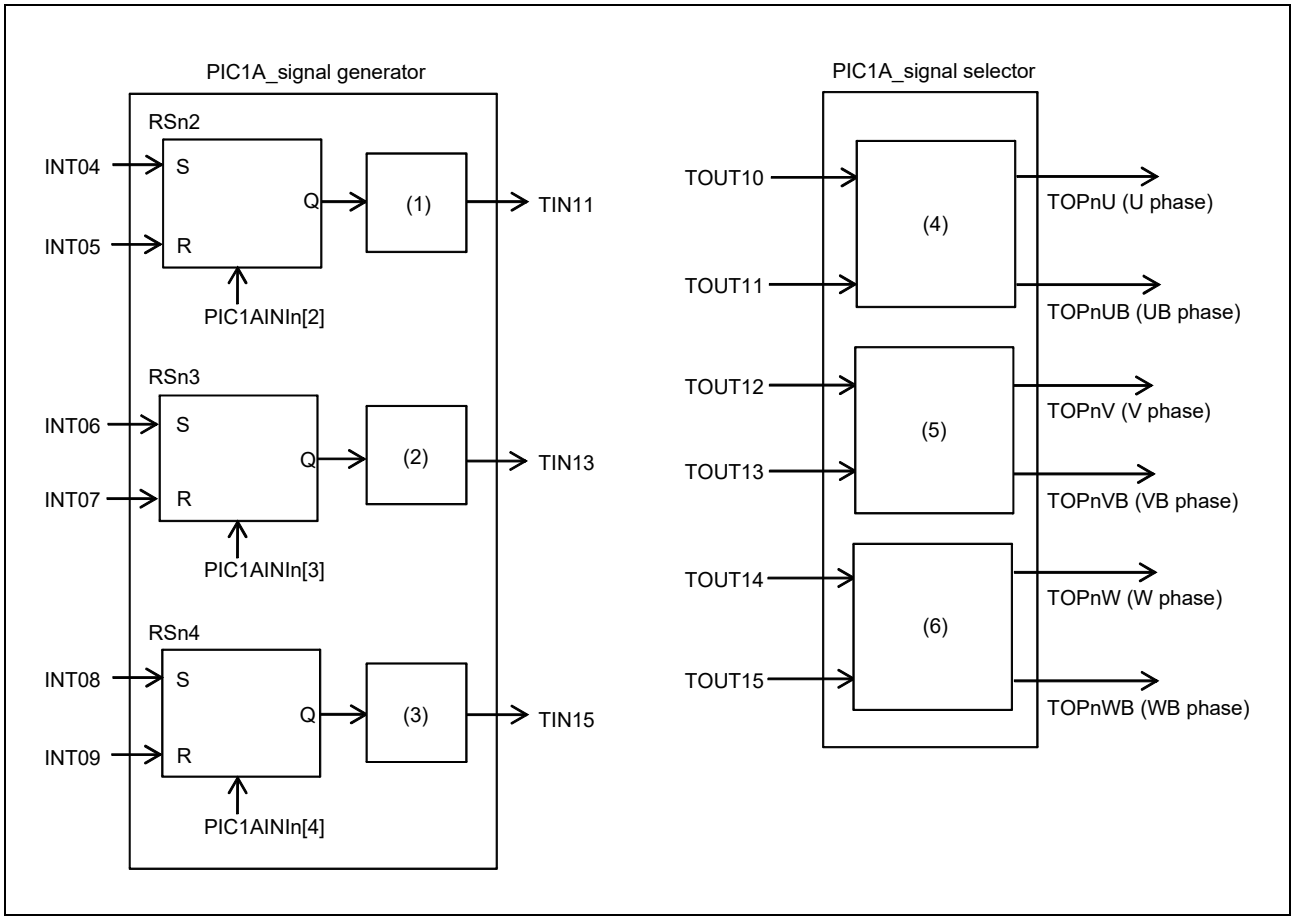

Figure 29.6 Block Diagram of PIC1A

The values of PIC1A registers used in this function are as follows.

U phase/ UB phase

The values to output the signal Q from RSn2 as TIN11. (**Figure 29.6**, unit (1))

PIC1AREG2n2[19:18] = 10_B

PIC1AREG2n2[2] = 1_B

PIC1ATAUDnSEL[23:22] = 00_B

The values to output TOUT10 and TOUT11 as TOPnU and TOPnUB, respectively (**Figure 29.6** , unit (4))

PIC1AREG2n1[19:16] = 0000_B

PIC1AREG2n3[2:0] = 000_B

PIC1AREG2n3[6:4] = 000_B

V phase/ VB phase

The values to output the signal Q from RSn3 as TIN13. (**Figure 29.6**, unit (2))

PIC1AREG2n2[23:22] = 10_B

PIC1AREG2n2[3] = 1_B

PIC1ATAUDnSEL[27:26] = 00_B

The values to output TOUT12 and TOUT13 as TOPnV and TOPnVB, respectively (**Figure 29.6**, unit (5))

PIC1AREG2n1[23:20] = 0000_B

PIC1AREG2n3[10:8] = 000_B

PIC1AREG2n3[14:12] = 000_B

W phase/ WB phase

The values to output the signal Q from RSn4 as TIN15. (**Figure 29.6**, unit (3))

PIC1AREG2n2[27:26] = 10_B

PIC1AREG2n2[4] = 1_B

PIC1ATAUDnSEL[31:30] = 00_B

The values to output TOUT14 and TOUT15 as TOPnW and TOPnWB, respectively (**Figure 29.6**, unit (6))

PIC1AREG2n1[27:24] = 0000_B

PIC1AREG2n3 [18:16] = 000_B

PIC1AREG2n3[22:20] = 000_B

Enables initialization of RSn2 to RSn4

The values to enable initialization of RSn2 to RSn4

PIC1AINIn0 [4] = 1_B (initialized)

PIC1AINIn0 [3] = 1_B (initialized)

PIC1AINIn0 [2] = 1_B (initialized)

(4) Function

Detail of the function is described using the one-phase PWM output (U phase/UB phase) with dead time as an example.

The following figure shows the timing diagram.

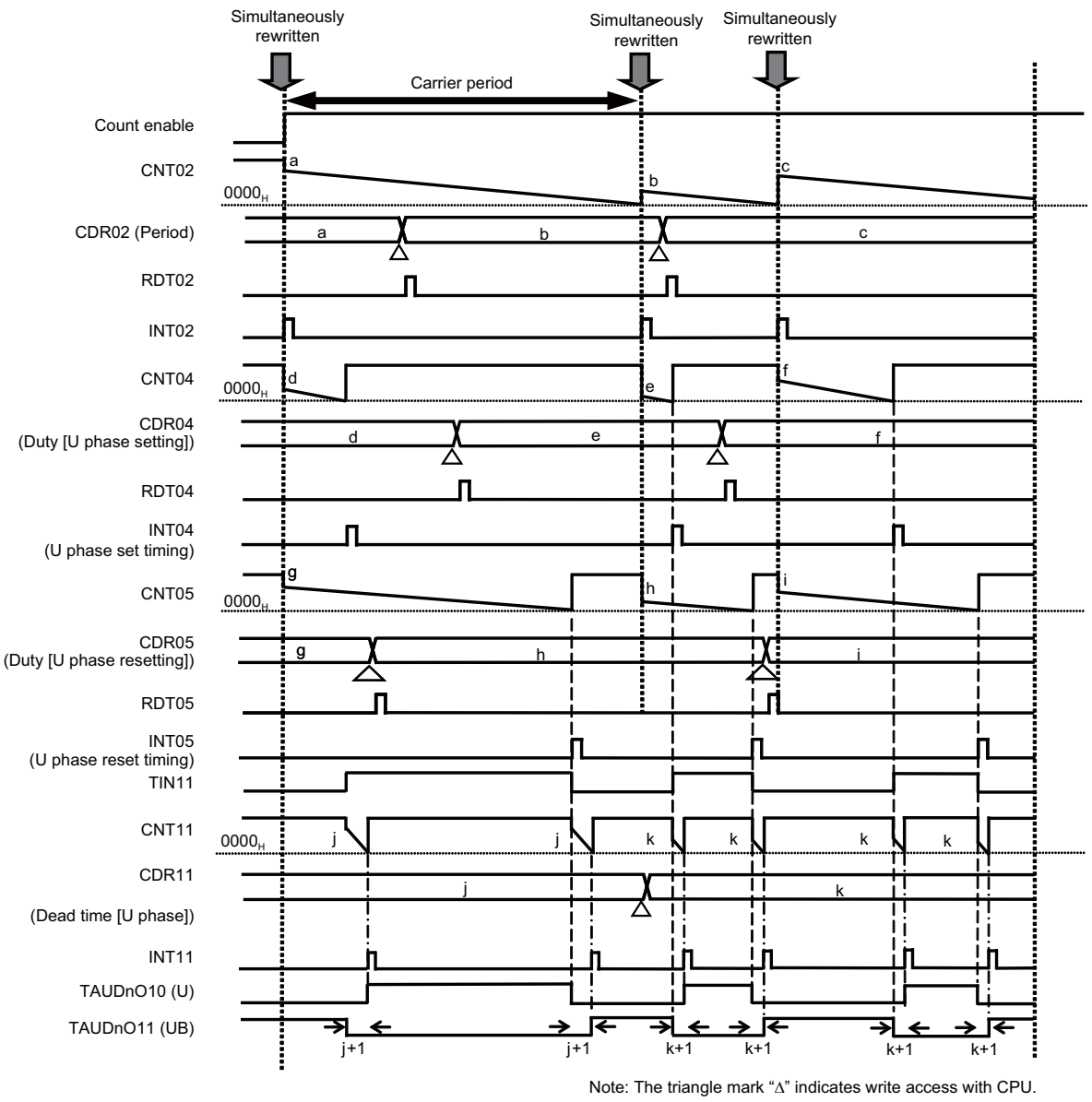

Note: For the detail of TAUD function including operation timing, see **Section 23, Timer Array Unit D (TAUD)** for TAUD function.

Figure 29.7 Timing Diagram of One-Phase PWM Output with Dead Time (U phase/UB phase)

(1) Using the simultaneous start trigger function, the timers to be used are started simultaneously.*1

(2) For CH04 and CH05, CH02 underflow allows the set values in CDR04 and CDR05 to be reloaded to CNT04 and CNT05, respectively.

(3) CH04 underflow allows the INT04 to be generated and TIN11 to become high level. CH05 underflow allows the INT05 to be generated and TIN11 to become low level, and the PWM waveform to be generated.

(4) Both edges of TIN11 allows the set values to be reloaded to CNT11.*2

(5) CH11 underflow allows the INT11to be generated and TAUDnO10 to become high level. CH05 underflow allows the INT05 to be generated and TAUDnO10 to become low level. The PWM waveform of U phase is generated and output to TOPnU.

(6) The rising edge of TIN11 allows TAUDnO11 to become low level. CH11 underflow allows the INT11 to be generated and TAUDnO11 to become high level. The PWM waveform of UB phase is generated and output to TOPnUB.

Similar configuration is applied to V phase/VB phase and W phase/WB phase.

Note 1. Select the count clock signal of the same clock for TAUDn.

Note 2. Set the effective edge to be detected by TIN11 of TAUDn as both edges (rising and falling) for this function.

Detail of the function when setting the longer clear timing than the carrier period is described using V phase/VB phase as an example.

The following figure shows the timing diagram.

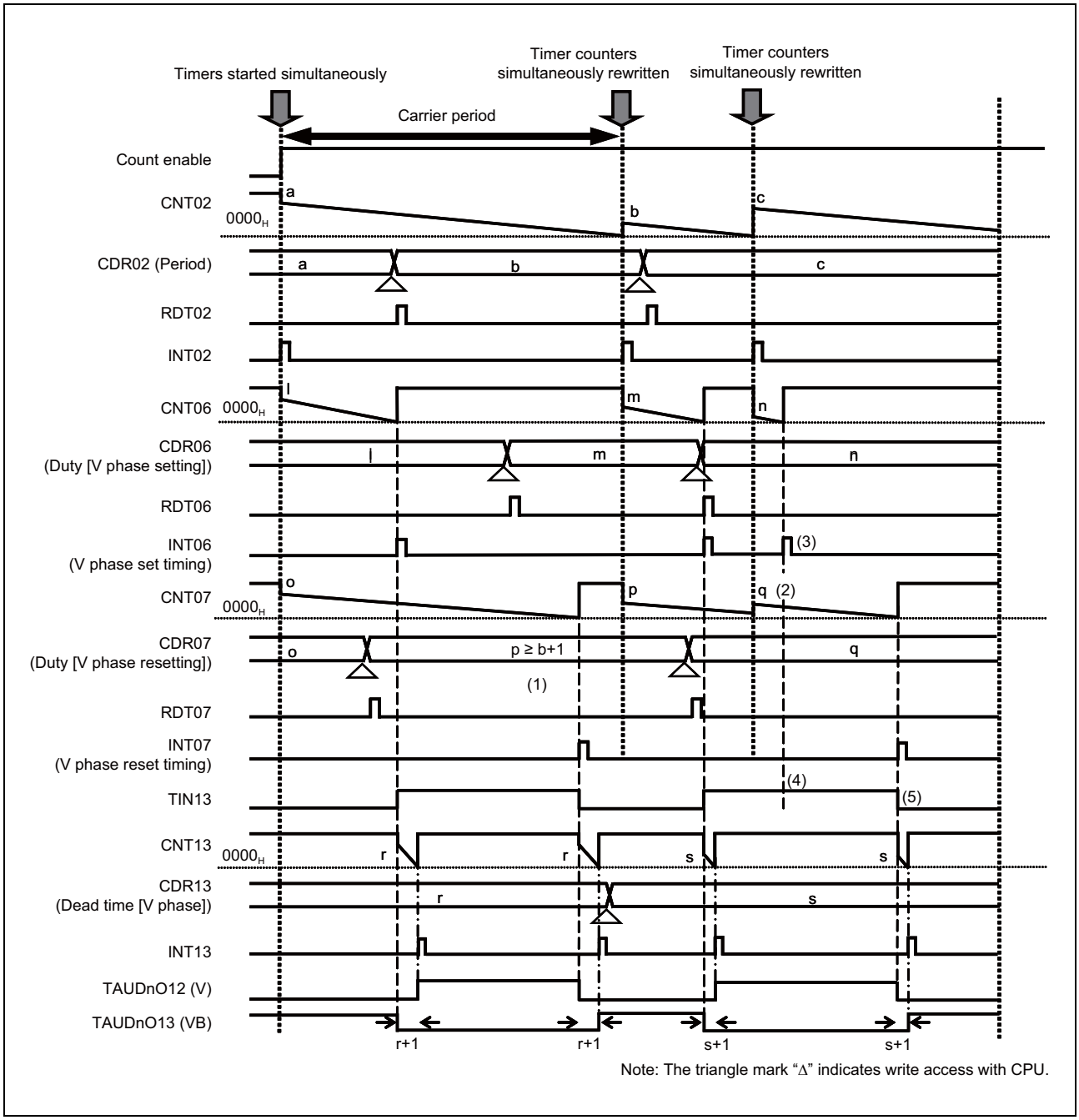

Figure 29.8 Clear Timing Value > Carrier Period Value (V phase/VB phase)

Setting the longer clear time than the carrier period allows the waveform output to be extended over the carrier period.

An operation example of one-phase PWM output (V phase/VB phase) is shown as follows. The operation flow from timer operation start to one-phase PWM output by one-phase PWM output function, refer to the description for one-phase PWM output with dead time (U phase/UB phase).

When the value set in CH07 is longer than the value set in CH02 (**Figure 29.8** (1)), underflow of the carrier period timer is generated before generation of V phase clearing timing signal (INT07), and the value is reloaded (**Figure 29.8** (2)).

This causes generation of the V phase set timing signal (INT06) to precede, thus preventing generation of the V phase clear timing signal (INT07) (**Figure 29.8** (3)).

Then, the PWM waveform is not influenced because V phase set timing signal is ignored in the PIC circuit (**Figure 29.8** (4)). Therefore, the PWM waveform is output extended over the carrier period (**Figure 29.8** (5))

The following figure shows the timing diagram of three-phase PWM output with the dead time.

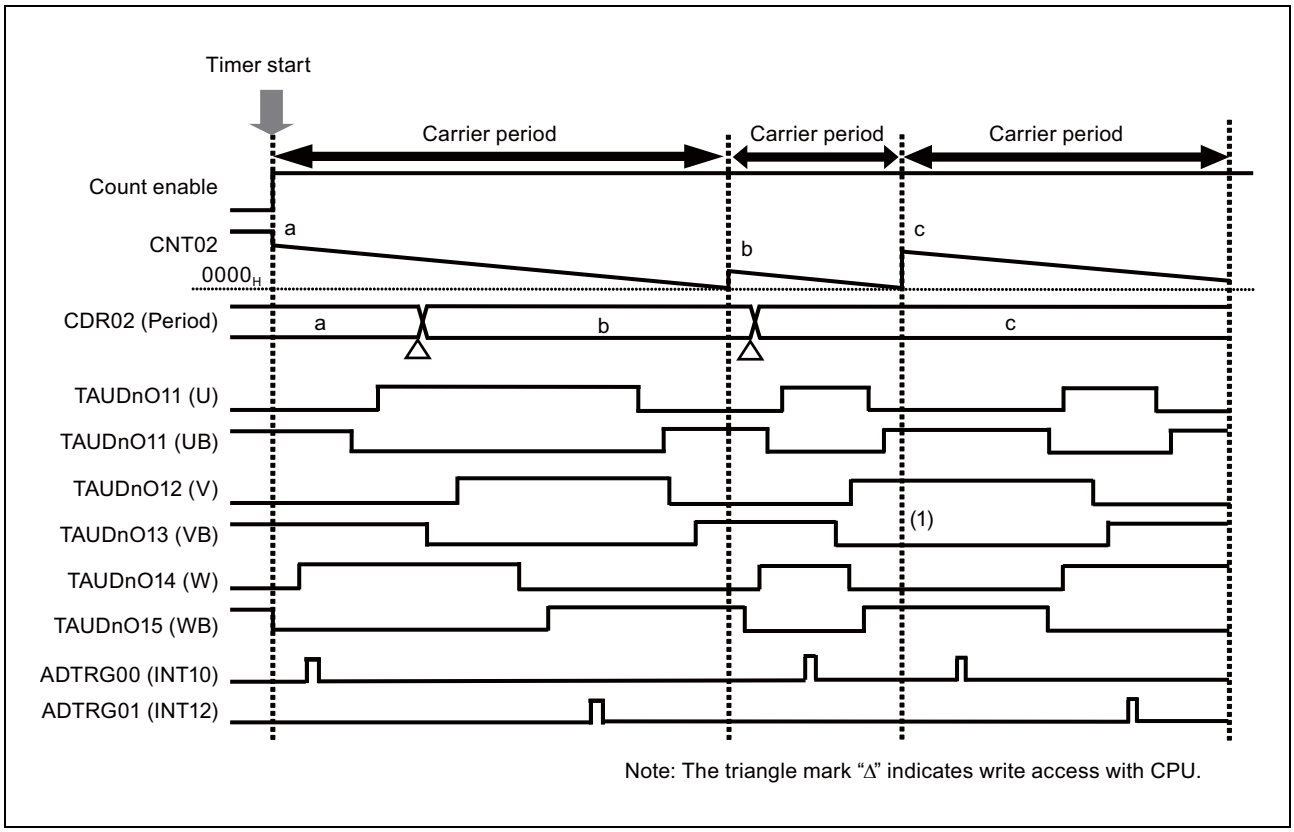

Figure 29.9 Timing Diagram of Three-Phase PWM Output with Dead Time

(5) Flow Chart

The following flow chart shows the PMW output function with the dead time.

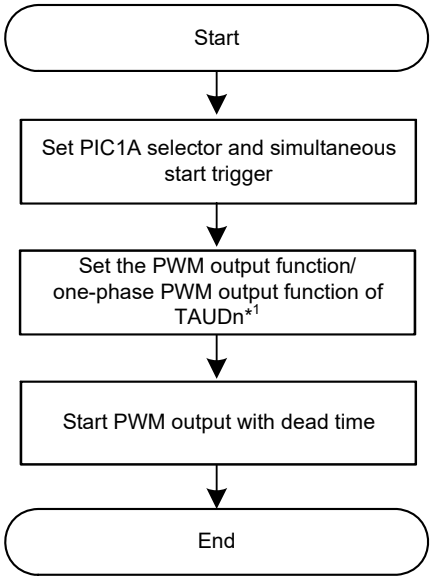

Note 1. For the setting of PWM output function of TAUDn, see **Section 23.13.1, PWM Output Function**.

29.2.3.3 High Accuracy Triangle Wave PWM Output Function with Dead Time

(1) Overview

This function generates triangle wave PWM output with dead time from one-phase to three-phases. Compared to the triangle wave PWM output function with dead time of TAUDn, this function enables a control of the variable dead time range, where duty cycle is close to 100% and 0%.

The TAUDn channels used in this function and the numbers of channels are listed in the following table.

High Accuracy Triangle Wave PWM Output with Dead Time	Number of TAUDn Channels
One-phase PWM output (U phase/UB phase)	5 channels (master channel: 1, slave channel: 4)
Two-phase PWM output (U phase/UB phase, V phase/VB phase)	9 channels (master channel: 1, slave channel: 8)
Three-phase PWM output (U phase/UB phase, V phase/VB phase, W phase/WB phase)	13 channels (master channel: 1, slave channel: 12)

Note: Above are examples of combination.

Usages of each channel of TAUDn are listed in the following table. CH2 is used as the master channel of CH3 to 9.

CHm is used as the master channel of CHm+1 (m = 10, 12, 14).

TAUDn Channel	U phase / UB phase	V phase / VB phase	W phase / WB phase	Usage
CH0	—	—	—	Not used
CH1	—	—	—	Not used
CH2	√	√	√	Carrier period (common to each phase)
CH3	—	—	—	Not used
CH4	√	—	—	Triangle PWM output with dead time (U phase/UB phase)
CH5	√	—	—	
CH6	—	√	—	Triangle PWM output with dead time (V phase/VB phase)
CH7	—	√	—	
CH8	—	—	√	Triangle PWM output with dead time (W phase/WB phase)
CH9	—	—	√	
CH10	√	—	—	Reduced dead time pulse (U phase/UB phase)
CH11	√	—	—	
CH12	—	√	—	Reduced dead time pulse (V phase/VB phase)
CH13	—	√	—	
CH14	—	—	√	Reduced dead time pulse (W phase/WB phase)
CH15	—	—	√	

Note: √: Used; —: Not used

(2) Configuration

The high accuracy triangle wave PWM output function with the dead time is realized by using the triangle wave PWM output function/one-shot pulse output function of TAUDn and PIC1A in combination. The following figure shows the block diagram of the high accuracy triangle wave PWM output function with the dead time.

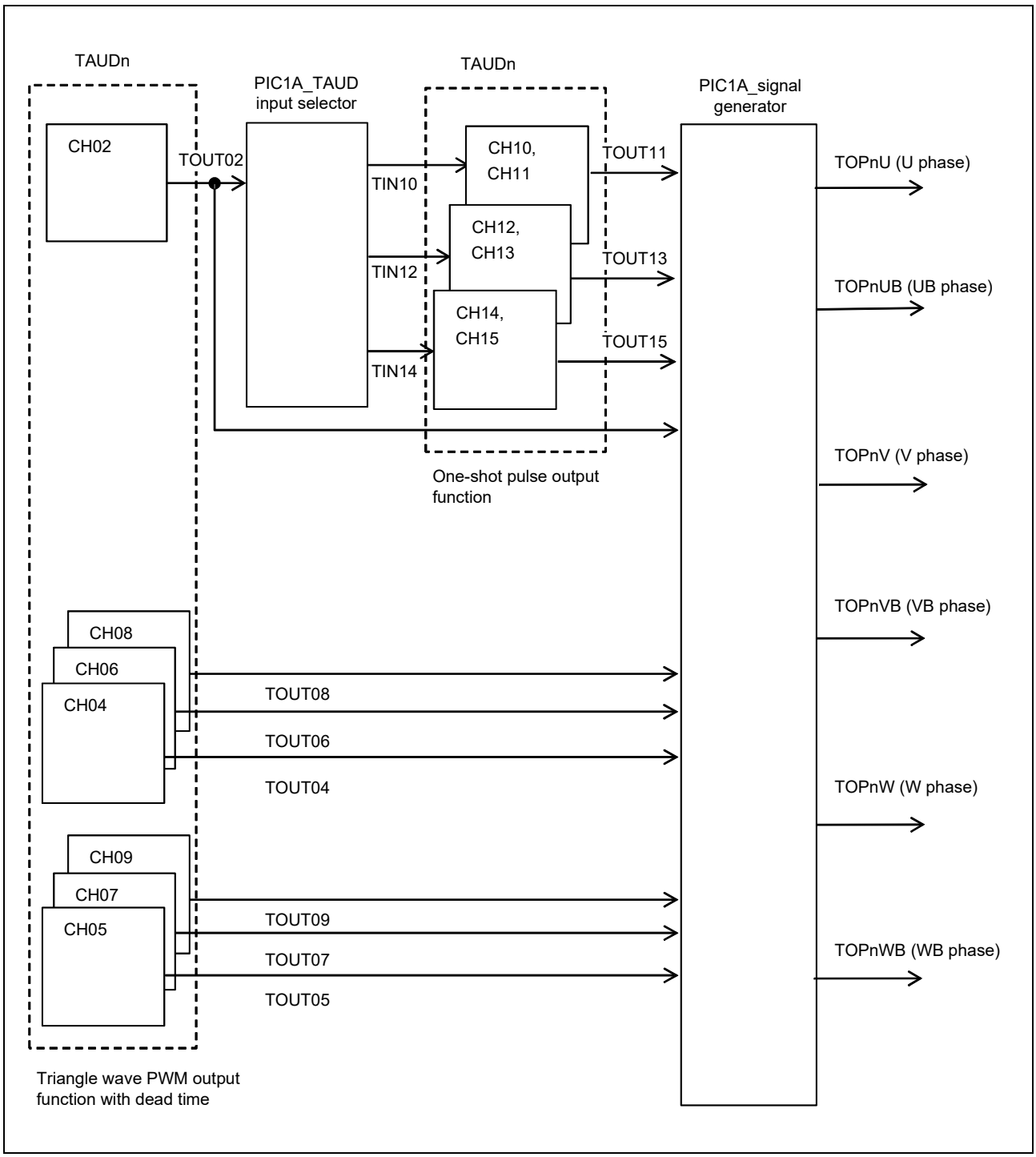

Figure 29.10 Block Diagram of High Accuracy Triangle Wave Three-Phase PWM Output With Dead Time

The configuration of this function is described as follows using the PWM output of U phase/UB phase as an example.

- [PIC1A_TAUD input selector]
  TOUT02 is selected and output to TIN10.
- [TAUDn] One-shot pulse output function
  CH10 and CH11 are used in combination. Setting the delay value and the pulse width to CDR10 and CDR11, respectively allows the one-shot pulse output signal (TOUT11) to be generated.
- [TAUDn] Triangle wave PWM output function with dead time
  CH02, CH04, and CH05 are used in combination. Setting the period, duty, and dead time to CDR02, CDR04, and CDR05, respectively generates the triangle wave PWM output signal with dead time (TOUT04 and TOUT05).
- [PIC1A_signal generator]
  The reduced dead time pulses (UO1 and UO2) are generated at PFN001 from the one-shot pulse output signal.
  UO1 and UO2 are synthesized with TOUT04 and TOUT05 at FN00 and FN01, respectively, added dead time variable range pulse, and TOPnU (U phase PWM signal) and TOPnUB (UB phase PWM signal) are generated.

Similar configuration is applied to V phase/VB phase and W phase/WB phase.

(3) Registers

The following figure shows the block diagram of PIC1A.

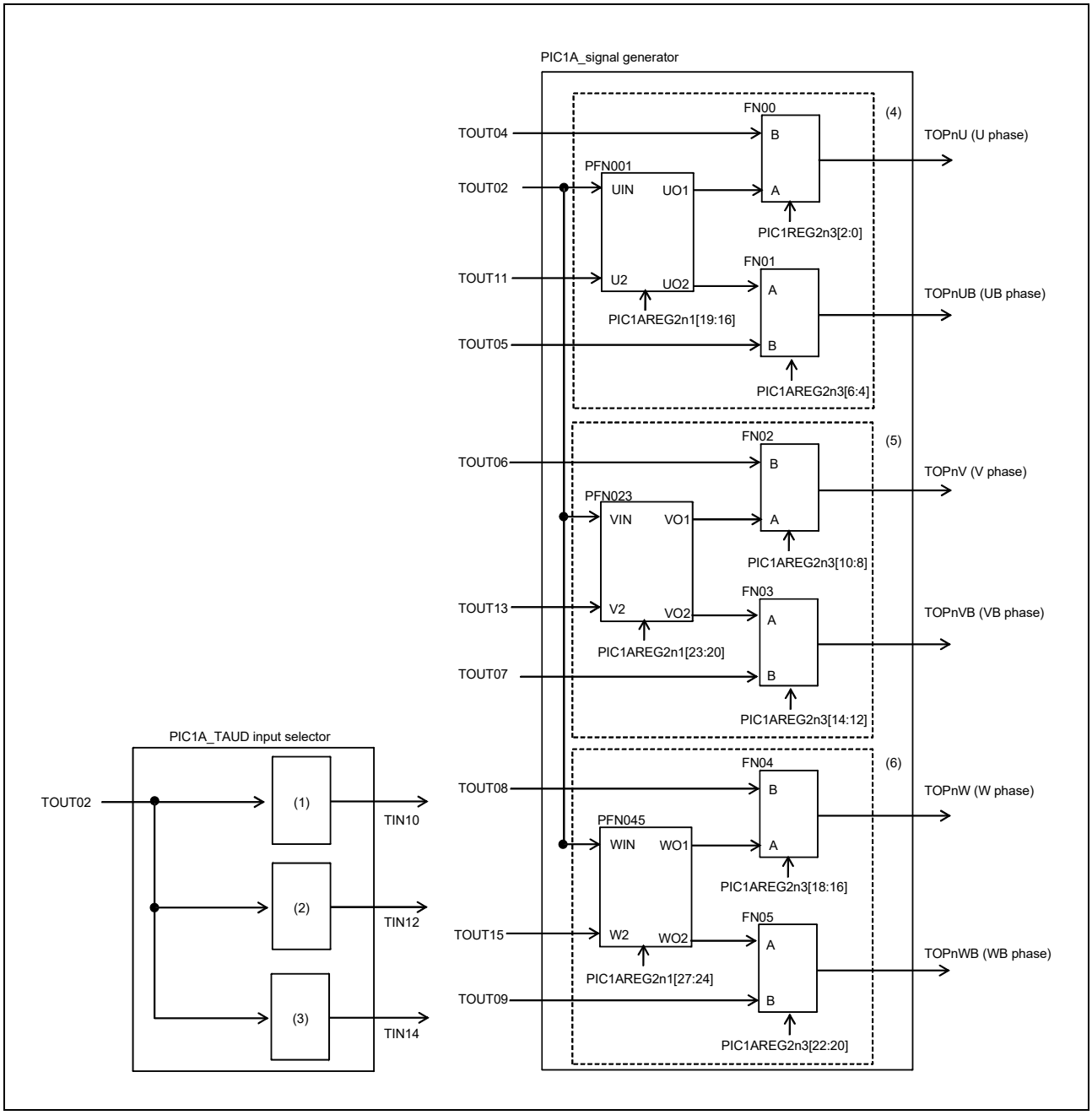

Figure 29.11 Block Diagram of PIC1A

The values of PIC1A registers used in this function are as follows.

(1) PIC1A_TAUD input selector (U phase/ UB phase)
The values to output TOUT02 as TIN10 (common to active high/low)
PIC1AREG2n0[18] = 1_B
PIC1AREG2n2[17:16] = 10_B
PIC1ATAUDnSEL[21:20] = 00_B

(2) PIC1A_TAUD input selector (V phase/ VB phase)
The values to output TOUT02 as TIN12 (common to active high/low)
PIC1AREG2n0[18] = 1_B
PIC1AREG2n2[21:20] = 10_B
PIC1ATAUDnSEL[25:24] = 00_B

(3) PIC1A_TAUD input selector (W phase/ WB phase)
The values to output TOUT02 as TIN14 (common to active high/low)
PIC1AREG2n0[18] = 1_B
PIC1AREG2n2[25:24] = 10_B
PIC1ATAUDnSEL[29:28] = 00_B

(4) PIC1A_ signal generator (U phase/ UB phase)
The values to output one-phase PWM (active high/low) from TAUDnO10 and TAUDnO11
PIC1AREG2n1[19:16] = 1010_B (active high), 1111_B (active low)
PIC1AREG2n3 [06:04] = 100_B (active high), 101_B (active low)
PIC1AREG2n3[02:00] = 100_B (active high), 101_B (active low)

(5) PIC1A_signal generator (V phase/ VB phase)
The values to output one-phase PWM (active high/low) from TAUDnO12 and TAUDnO13
PIC1AREG2n1[23:20] = 1010_B (active high), 1111_B (active low)
PIC1AREG2n3 [14:12] = 100_B (active high), 101_B (active low)
PIC1AREG2n3[10:08] = 100_B (active high), 101_B (active low)

(6) PIC1A_signal generator (W phase/ WB phase)
The values to output one-phase PWM (active high/low) from TAUDnO14 and TAUDnO15
PIC1AREG2n1[27:24] = 1010_B (active high), 1111_B (active low)
PIC1AREG2n3 [22:20] = 100_B (active high), 101_B (active low)
PIC1AREG2n3[18:16] = 100_B (active high), 101_B (active low)

(4) Function

Detail of the function is described using U phase/UB phase as an example. The function with V phase/VB phase and W phase/WB phase are operated under the same logic as that of U phase/UB phase with different input signals and register settings.

- U phase combination circuit (PFN001)
  This circuit generates reduced dead time pulses*1 (FN00A and FN01A) that are used to insert the dead time pulse generated by the one-shot pulse output function into the triangle wave PWM generated by the triangle wave PWM output function with the dead time. For the block diagram, see **Figure 29.1, Block Diagram of PFN001**.

Note 1. Reduced dead time pulses are the pseudo pulses that are inserted into the PWM output provided by the triangle wave PWM output function with dead time of TAUDn and that are modeled on the dead time pulses that are generated in the range where duty cycle is close to 100% or 0% in PWM output in HT-PWM mode of TSG3n.

- Logical operation circuits (FN0i) (i = 0, 1)
  This circuit synthesizes the triangle wave PWM output (TOUT04 and TOUT05) from the triangle wave PWM output function with the dead time and the outputs from the combinational circuit PFN001 (UO0 and UO1) to generate PWM with reduced dead time pulses inserted. The synthesizing logic of this circuit is selected with PIC1AREG2n3k (k = 00 to 02, 04 to 06). For the block diagram, see **Figure 29.2, Block Diagram of FN00**.

Detail of the function is described using high accuracy triangle wave PWM output function (U phase/UB phase) as an example.

The following figure shows the timing diagram when U phase duty cycle = 0% and UB phase duty cycle = 100% at active high.

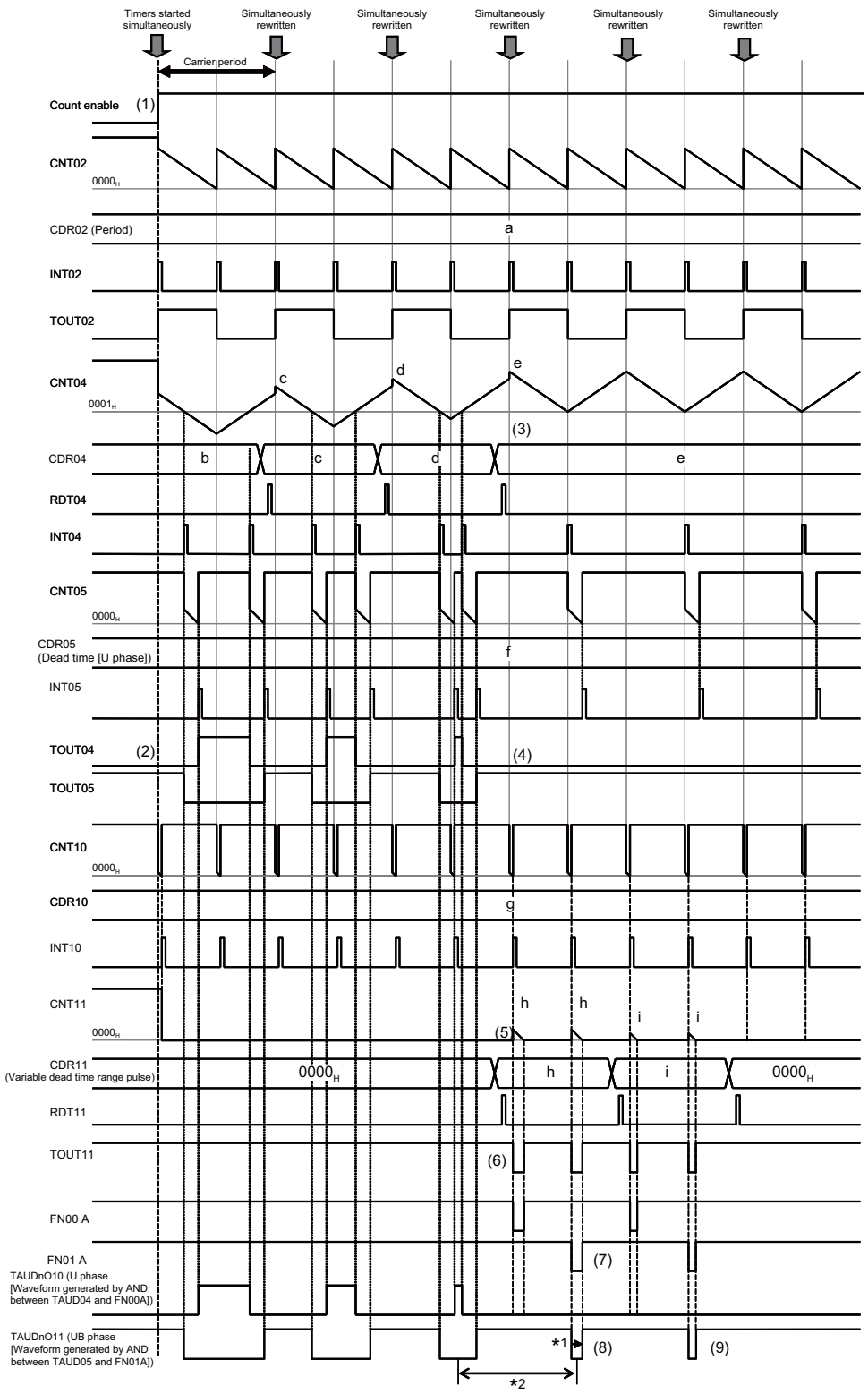

Figure 29.12 Timing Diagram of High Accuracy Triangle Wave PWM (U phase duty cycle = 0%, UB phase duty cycle = 100%) Output with Dead Time (Active High)

(1) With the simultaneous timer start function, the timers to be used are started simultaneously.

(2) TOUT04 and TOUT05 are generated by the triangle wave PWM output function with dead time.

(3) A 0% duty cycle value is set in CDR04 for U phase output.

(4) The setting described in step (3) sets the TOUT04 output to the inactive level and the TOUT05 output to the active level.

(5) To generate the reduced dead time pulse, a value for the reduced dead time pulse width is set in CDR11 when a 0% duty cycle value for U phase output is set in step (3).

(6) CH10 count starts with the effective edge of TOUT02 and INT10 is generated when the counter underflows. CH11 count starts by generation of INT10 and the reduced dead time pulse (TOUT11) of the width set in CDR11 is output.

(7) The reduced dead time pulse (UO1 and UO2) are generated from TOUT02 and TOUT11 in PFN001.

(8) UO1 and UO2 are synthesized with TOUT04 and TOUT05 in FN00 and FN01, and are output as TOPnU (U phase PWM signal) and TOPnUB (UB phase PWM signal).

CAUTION

Since the reduced dead time pulses are sawtooth waves, they expand and contract on one side, unlike the triangle wave pulses, which expand and contract on both sides. Since one-side expansion and contraction applies to the reduced dead time pulses, a one-phase PWM output period in the reduced dead time range is longer by half the width of an inserted reduced dead time pulse.

The following figure shows the timing diagram when U phase duty cycle = 100% and UB phase duty cycle = 0% at active high.

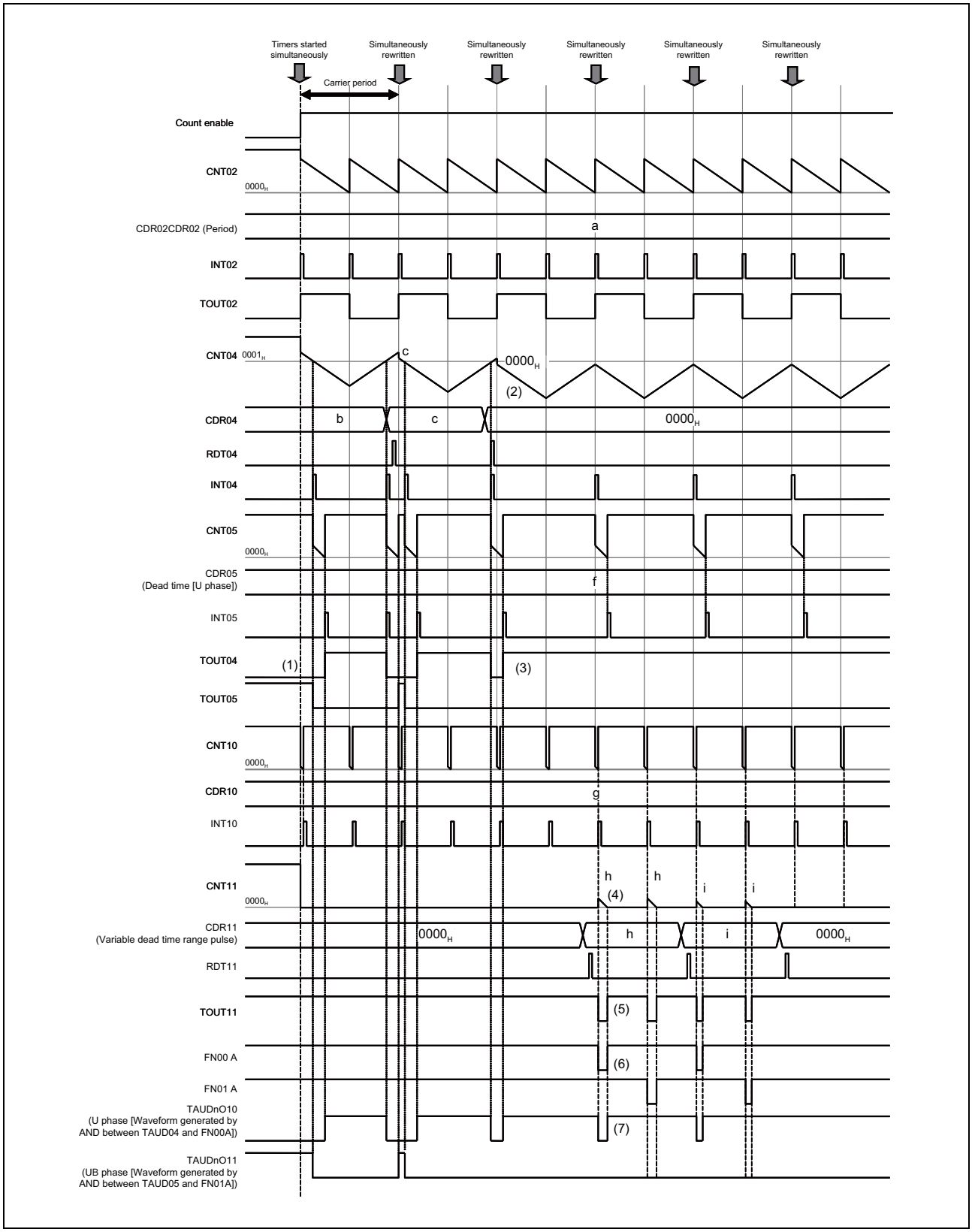

Figure 29.13 Timing Diagram of High Accuracy Triangle Wave PWM (U phase duty cycle = 100%, UB phase duty cycle = 0%) Output with Dead Time (Active High)

(1) With the simultaneous timer start trigger function, the timers to be used are started simultaneously.

(2) TOUT04 and TOUT05 are generated by the triangle wave PWM output function with dead time.

(3) A 100% duty cycle value (CDR4 = 0000_H) is set in CDR04 for U phase output.

(4) TOUT04 output s the active level and TOUT05 outputs the inactive level.

(5) A value for the reduced dead time pulse width is set in CDR11 one period after setting 100% duty cycle for U phase output.

(6) CH10 count starts with the effective edge of TOUT02 and INT10 is generated when the counter underflows. CH11 count starts by generation of INT10 and the reduced dead time pulse (TOUT11) of the width set in CDR11 is output.

(7) The reduced dead time pulse (UO1 and UO2) are generated from TOUT02 and TOUT11 in PFN001.

(8) UO1 and UO2 are synthesized with TOUT04 and TOU05 in FN00 and FN01, and are output as TOPnU (U phase PWM signal) and TOPnUB (UB phase PWM signal).

CAUTION

As shown in Figure 29.14, if a value is set for the variable dead time range pulse width in CDR11 at the same time as a 100% duty cycle value is set for U phase output in CDR04, the variable dead time range pulse affects the last PWM output from TOUT04 (indicated by Figure 29.14, (1)) by the amount of time indicated by Figure 29.14, (2), which is due to the functional specification. To eliminate this influence, CDR11 must be set one period after setting CDR04.

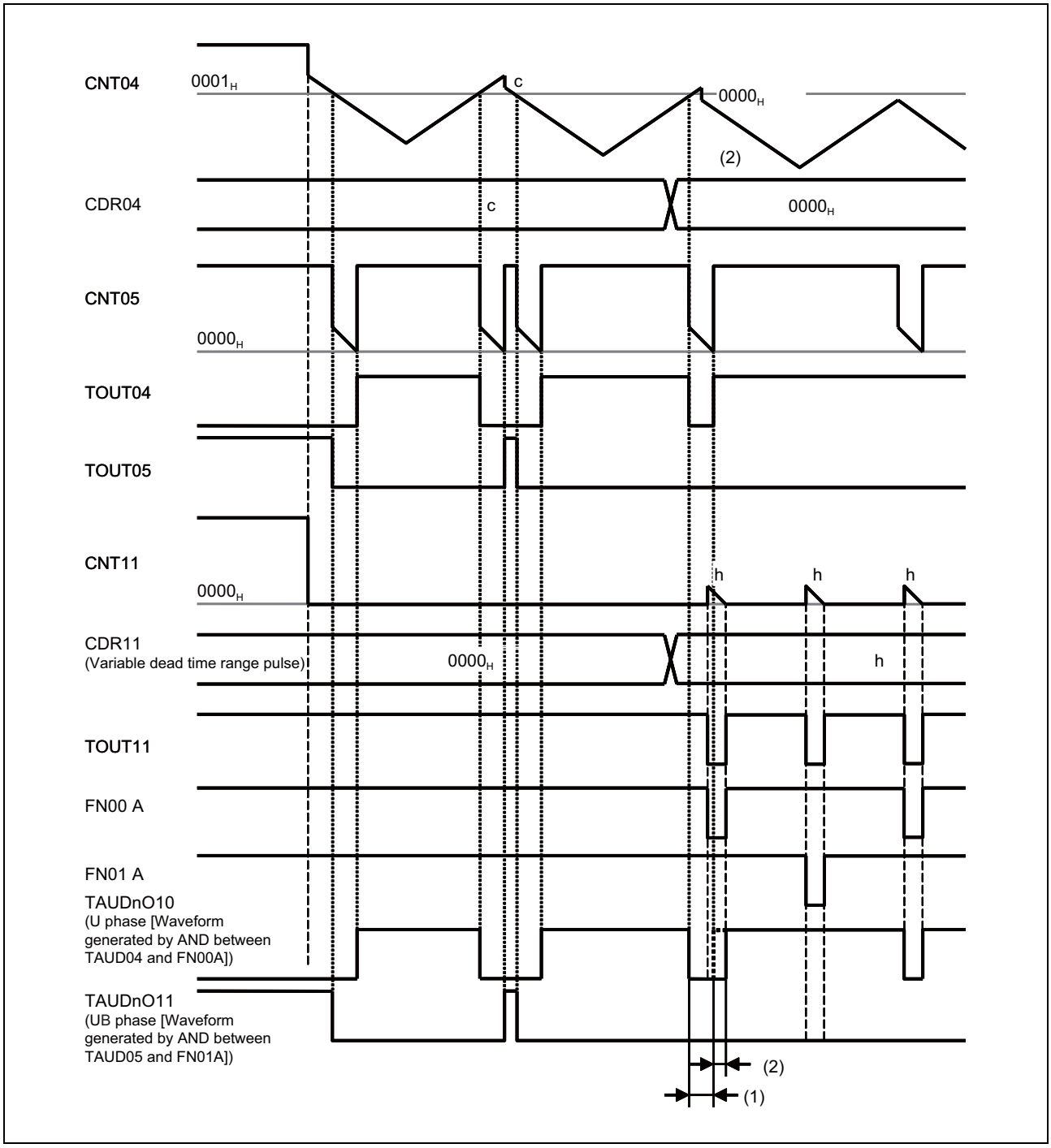

Figure 29.14 Timing Diagram of an Example of Variable Dead Time Range Pulse Giving Influence on Triangle Wave PWM Output with Dead Time

The following figure shows the timing diagram when U phase duty cycle = 100% and UB phase duty cycle = 0% at active low.

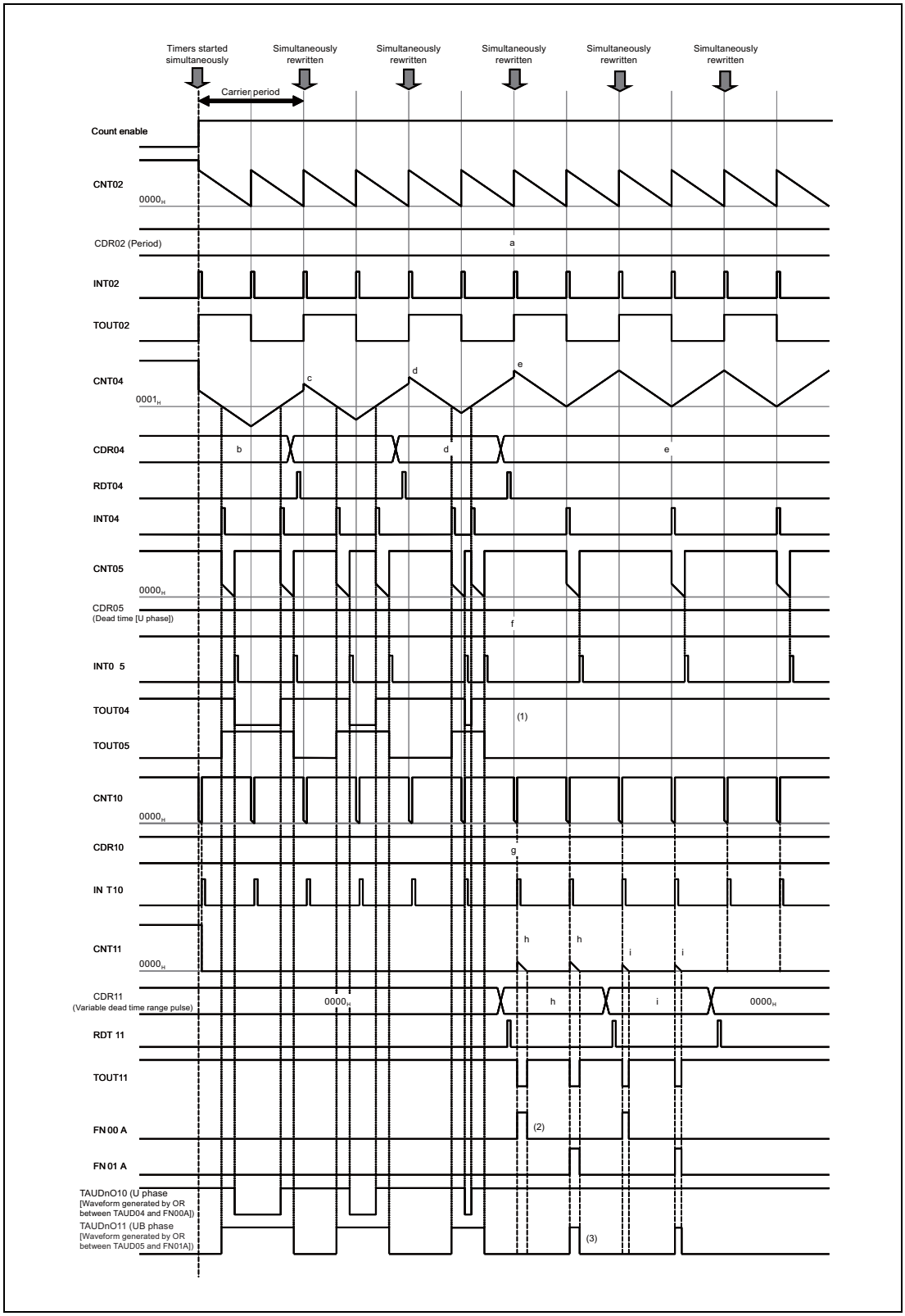

Figure 29.15 Timing Diagram of High Accuracy Triangle Wave PWM (U phase duty cycle = 100%, UB phase duty cycle = 0%) Output with Dead Time (Active Low)

The operation flow from timer operation start to triangle wave PWM output with dead time is same as **Figure 29.13, Timing Diagram of High Accuracy Triangle Wave PWM (U phase duty cycle = 100%, UB phase duty cycle = 0%) Output with Dead Time (Active High)**, with the difference of the PWM output signal from TOUT04 and TOUT05 are active low.

CAUTION

Set each CDR for the one-shot pulse output function so that the following condition is satisfied.

CDR05 ≥ (CDR10 + CDR11)

If the condition above is not satisfied, the output waveform may be influenced. To minimize the influence, satisfy the condition above, and also fix the value of CDR11 to 0000_H until the reduced dead time pulse is required.

Set the both edges to be detected of TIN10 (TOUT02) as effective, and set TAUDnTOL11 to 1 (active low).

Select the count clock signal (CK0 to 3) of the same clock for TAUDn.

After high accuracy triangle wave PWM output with dead time is started, do not set the value of variable dead time pulse width at the same time as setting a 100% duty cycle value for U phase, V phase, and W phase.

(5) Flow Chart

The flow chart of this function is shown in the following figure.

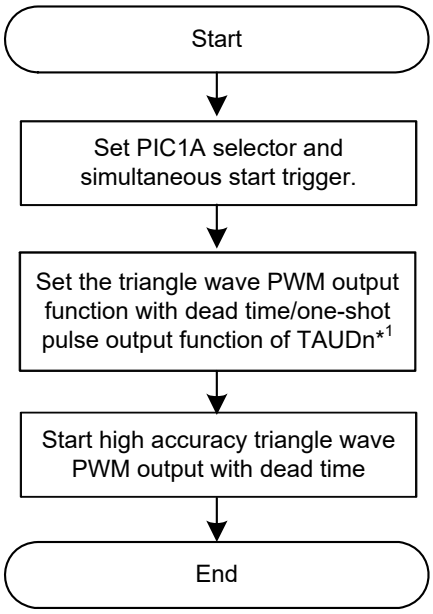

Note 1. For the setting of triangle wave PWM output function with dead time of TAUDn, see **Section 23.13.7, Triangle PWM Output Function with Dead Time**, or the setting of one-shot pulse output function, see **Section 23.13.2, One-Shot Pulse Output Function**.

29.2.3.4 Delay Pulse Output Function with Dead Time

(1) Overview

This function allows generation of PWM output with the dead time, that is, delayed as specified from the period timing using TAUDn.

With this function, PWM output can be reset in the next period unlike with the function described in **Section 29.2.3.2, PWM Output Function with Dead Time**.

The following table lists the number of channels used.

PWM Output with Dead Time	Number of TAUDn Channels
One-phase PWM output (U phase/UB phase)	5 channels (master channel: 1, slave channel: 4)
Two-phase PWM output (U phase/UB phase, V phase/VB phase)	9 channels (master channel: 1, slave channel: 8)
Three-phase PWM output (U phase/UB phase, V phase/VB phase, W phase/WB phase)	13 channels (master channel: 1, slave channel: 12)

Note: Above are examples of combination.

Usages of each channel of TAUDn are listed in the following table. CH2 is used as the master channel of CH3 to 9.

TAUDn Channel	U phase / UB phase	V phase / VB phase	W phase / WB phase	Usage
CH0	—	—	—	Not used
CH1	—	—	—	Not used
CH2	√	√	√	Carrier period (common to each phase)
CH3	√	√	√	Reserved
CH4	√	—	—	Delay pulse input (U phase/UB phase)
CH5	√	—	—	
CH6	—	√	—	Delay pulse input (V phase/VB phase)
CH7	—	√	—	
CH8	—	—	√	Delay pulse input (W phase/WB phase)
CH9	—	—	√	
CH10	√	—	—	U phase output (TOUT10)
CH11	√	—	—	UB phase output (TOUT11)
CH12	—	√	—	V phase output (TOUT12)
CH13	—	√	—	VB phase output (TOUT13)
CH14	—	—	√	W phase output (TOUT14)
CH15	—	—	√	WB phase output (TOUT15)

Note: √: Used; —: Not used

(2) Configuration

The delay pulse output function with the dead time is realized by using the delay pulse output function/ one-phase PWM output function of TAUDn and PIC1A in combination. The following figure shows the block diagram of the delay pulse output function with the dead time.

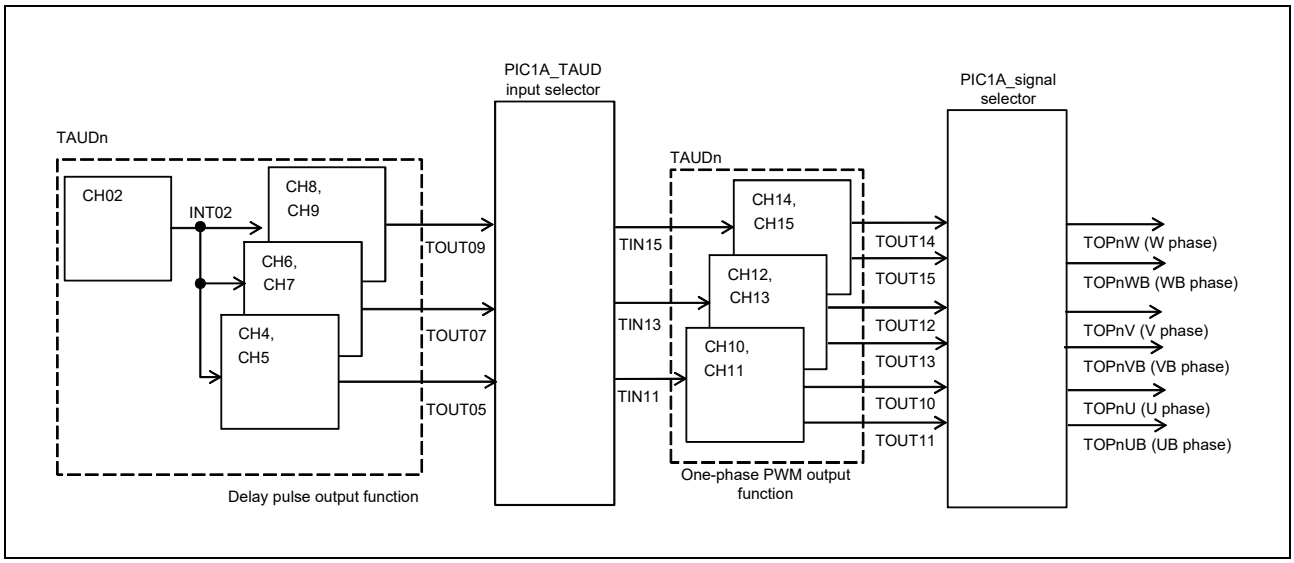

Figure 29.16 Block Diagram of Delay Pulse Output Function with Dead Time

The configuration of this function is described as follows using the PWM output of U phase/UB phase as an example.

- [TAUDn] Delay pulse output function
  CH02, CH04, and CH05 are used in combination. Setting the period, delay value, and the pulse width to CDR02, CDR04, and CDR05, respectively generates the delay pulse output signal (TOUT05).
- [PIC1A_TAUD input selector]
  TOUT05 is selected for output as TIN11.
- [TAUDn] One-phase PWM output function
  CH10 and CH11 are used in combination. Setting the dead time value to CDR11, and inserting dead time into the PWM signal to be input to TIN11 allows TOUT10 (U phase PWM signal) and TOUT11 (UB phase PWM signal) to be output.
- [PIC1A_signal selector]
  TOUT10 and TOUT11 inputs are selected and output to TOPnU and TOPnUB pins, respectively.

Similar configuration is applied to V phase/VB phase and W phase/WB phase.

(3) Registers

A block diagram of PIC1A is shown in the following figure.

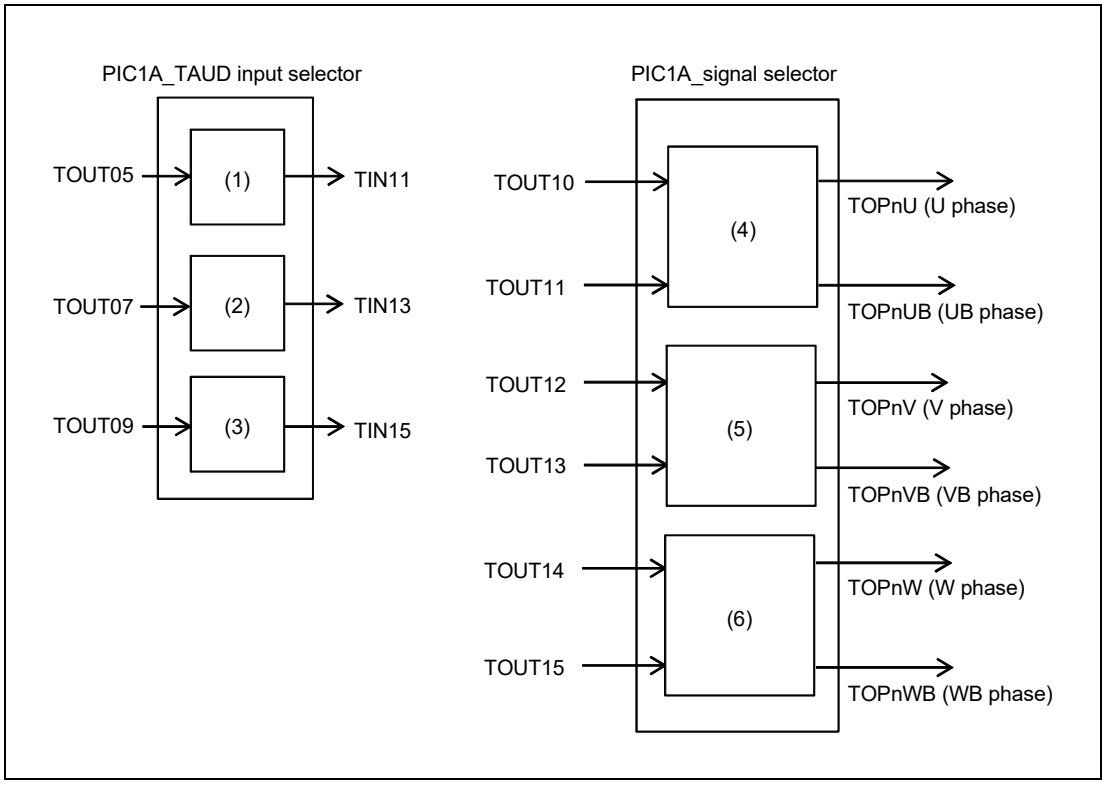

Figure 29.17 Block Diagram of PIC1A

The values of PIC1A registers used in this function are as follows.

U phase/ UB phase

The values to output TOUT05 as TIN11 (**Figure 29.16**, unit (1))

PIC1AREG2n2[19:18] = 10_B

PIC1AREG2n2[2] = 0_B

PIC1ATAUDnSEL[23:22] = 00_B

The values to output the TOUT10 and TOUT11 as TOPnU and TOPnUB, respectively (**Figure 29.16**, unit (4))

PIC1AREG2n1[19:16] = 0000_B

PIC1AREG2n3[2:0] = 000_B

PIC1AREG2n3[6:4] = 000_B

V phase/ VB phase

The values to output TOUT07 as TIN13 (**Figure 29.16**, unit (2))

PIC1AREG2n2[23:22] = 10_B

PIC1AREG2n2[3] = 0_B

PIC1ATAUDnSEL[27:26] = 00_B

The values to output TOUT12 and TOUT13 as TOPnV and TOPnVB, respectively (**Figure 29.16**, unit (5))

PIC1AREG2n1[23:20] = 0000_B

PIC1AREG2n3[10:8] = 000_B

PIC1AREG2n3[14:12] = 000_B

W phase/ WB phase

The values to output TOUT09 as TIN15 (**Figure 29.16**, unit (3))

PIC1AREG2n2[27:26] = 10_B

PIC1AREG2n2[4] = 0_B

PIC1ATAUDnSEL[31:30] = 00_B

The values to output TOUT14 and TOUT15 as TOPnW and TOPnWB, respectively (**Figure 29.16**, unit (6))

PIC1AREG2n1[27:24] = 0000_B

PIC1AREG2n3 [18:16] =000_B

PIC1AREG2n3[22:20] =000_B

(4) Function

Detail of the function is described using the delay pulse output (U phase/UB phase) as an example.

The following figure shows the timing diagram.

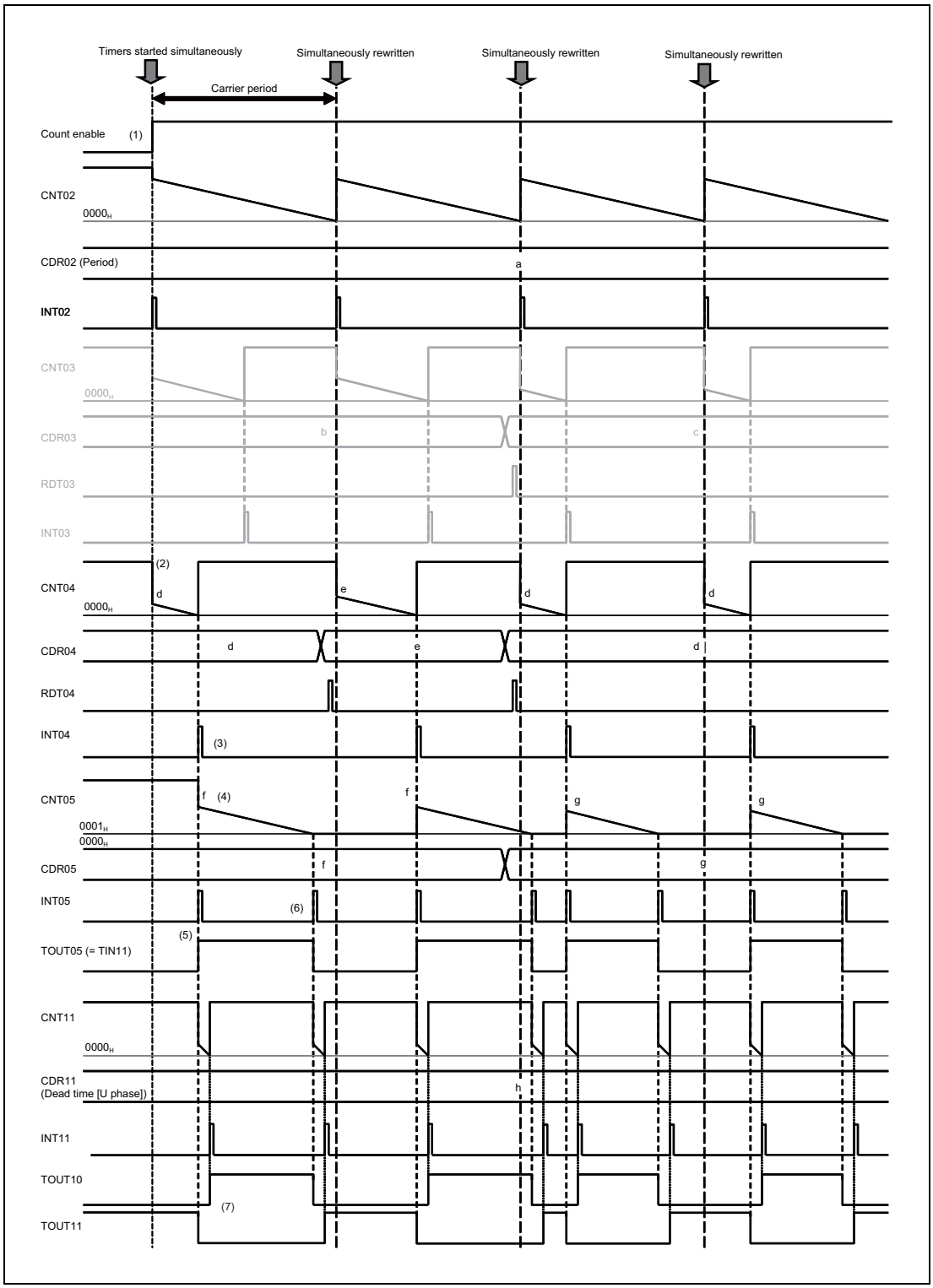

Figure 29.18 Timing Diagram of Delay Pulse Output with Dead Time (U phase/ UB phase)

(1) Using the simultaneous start trigger function, the timers to be used are started simultaneously.

(2) For CH04, CH02 underflow allows the set value in CDR04 to be reloaded to CNT04.

(3) CH04 underflow allows the INT04 to be generated.

(4) INT04 generation allows the set value to be reloaded from CDR05 to CNT05, thus starting the count operation of CH05.

(5) Here, INT05 is generated and the TOUT05 output level changes to the active level.

(6) Upon CH05 underflow, INT05 is generated again and the TOUT05 output level changes to the inactive level. TOUT05 is supplied to TIN11.

(7) The U phase PWM signal (TOUT10) and UB phase PWM signal (TOUT11) with the dead time is generated and output according to the TIN11 edges detected, and output to TOPnU and TOPnUB.

Similar configuration is applied to V phase/VB phase and W phase/WB phase.

CAUTION

Do not set the delay value which extends over carrier period.

Select the count clock signal of the same clock for TAUDn.

(5) Flow Chart

The following flow chart shows the PMW output function with the dead time.

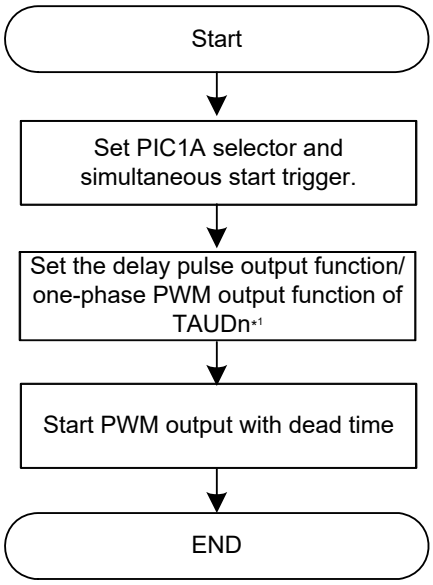

Note 1. For the setting of delay pulse output function of TAUDn, see **Section 23.13.3, Delay Pulse Output Function**.

29.2.3.5 Trigger Pulse Width Measurement Function

(1) Overview

This function allows measurement of trigger periods by inputting the trigger signal output from ENCAn to TAUJ0 and TAUDn.

The following table lists the ENCAn interrupt trigger signals to be measured by each timer and channel.

Timer	Channel	Interrupt Signal to be Measured
TAUJ0	CH0	ENCAT0IEC
	CH1	ENCAT0IEC
	CH2	ENCAT1IEC
	CH3	ENCAT1IEC
TAUD0	CH0	ENCAT0EQ0 or ENCAT0EQ1
	CH1	ENCAT0EQ1
	CH2	ENCAT0EQ0
TAUD1	CH0	ENCAT0EQ0 or ENCAT0EQ1
	CH1	ENCAT0EQ1
	CH2	ENCAT0EQ0

(2) Configuration

The trigger and pulse width measurement function is realized by using the TAUJ0 and TINm input pulse width measurement function of TAUDn, and PIC1A in combination. The following figure shows the block diagram of the trigger and pulse width measurement function.

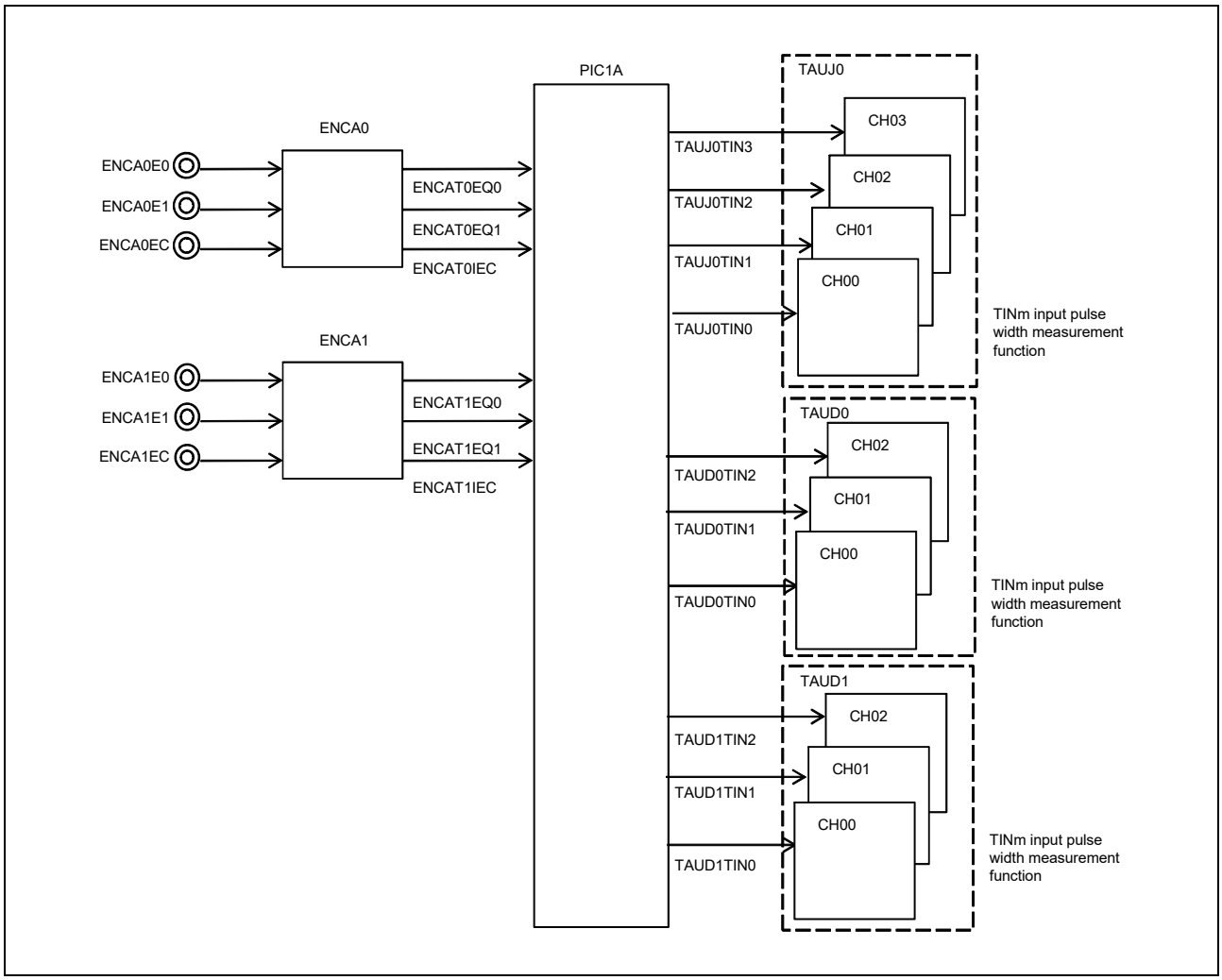

Figure 29.19 Block Diagram of Trigger and Pulse Width Measurement Function

The configuration of this function is described as follows using TAUJ0 CH0 as an example.

- [ENCA0]
  ENCAT0IEC interrupt signal is generated each time ENCA0 timer counter is cleared by input from ENCA0EC pin.
- [PIC1A] Latch and toggle output (DT) circuit
  ENCA0IEC interrupt trigger signal selected by the DT circuit is converted into a level-sensitive toggle signal and output to TAUJTIN0.
- [TAUJ0] TINm input pulse width measurement function
  TAUJ0 CH0 is used. TAUJ0CNT0 is captured each time input signal is toggled. The counter is cleared and restarted.

Similar configuration is applied for trigger and pulse width measurement of TAUD0 and TAUD1.

(3) Registers

Block diagram of PIC1A is shown in the following figure.

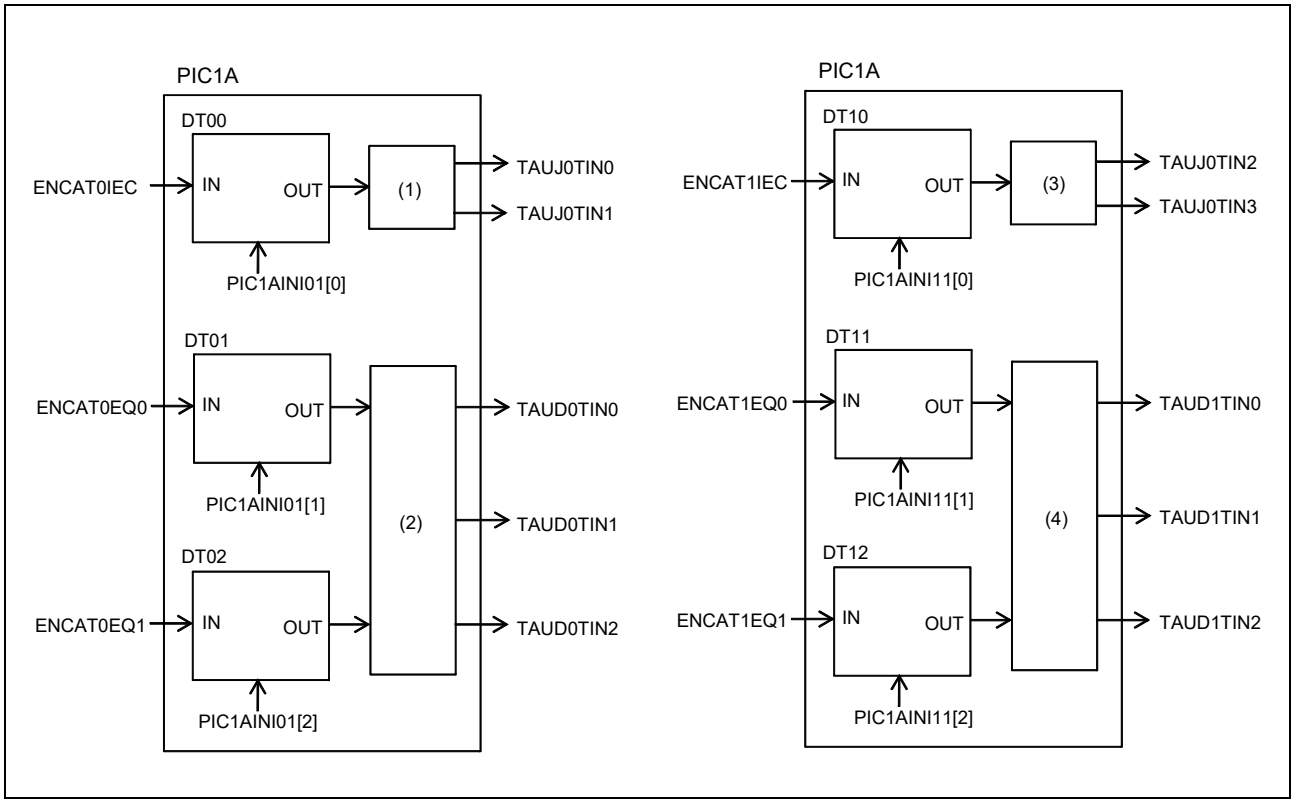

Figure 29.20 Block Diagram of PIC1A

The values of PIC1A registers used in this function are as follows.

ENCA0

- ENCAT0EC trigger and pulse width measurement
  The register values to select the timer which performs ENCAT0EC trigger and pulse width measurement. (**Figure 29.20**, unit (1))

Register Value			
PIC1AREG31			
1	0	TAUJ0.TIN00	TAUJ0.TIN01
0	0	Not selected.	
0	1	ENCAT0IEC	—
1	0	—	ENCAT0IEC
1	1	ENCAT0IEC	ENCAT0IEC

Note: Write 0 (value after reset) to PIC1AREG30[22,17:16]

- ENCAT0EQ0 and ENCAT0EQ1 trigger and pulse width measurement
  The register values to select the timer which performs ENCAT0EQ0 and ENCAT0EQ1 trigger and pulse width measurement. (**Figure 29.20**, unit (2))

Register Value										
PIC1AREG31										
13	12	11	10	9	8	7	6	TAUD0.TIN00	TAUD0.TIN01	TAUD0.TIN02
0	0	0	0	0	0	0	0	Not selected.		
0	0	1	1	0	0	0	1	ENCAT0EQ0	ENCAT0EQ1	—
0	1	0	0	0	0	0	1	ENCAT0EQ1	—	ENCAT0EQ0
0	1	1	0	0	0	0	1	ENCAT0EQ1	ENCAT0EQ1	ENCAT0EQ0
0	1	1	1	0	0	0	1	ENCAT0EQ0	ENCAT0EQ1	ENCAT0EQ0

Note: Do not set the values other than the settings listed above for this function. Write 0 (value after reset) to PIC1ATAUD0SEL[5:0] and PIC1AREG30[22,17:16,1:0].

- Enables initialization of the DT02 to DT00 circuits
  The register values to enable initialization of the DT02 to DT00 circuits.
  PIC1AINI01[2:0] = 111_B (initialized)

ENCA1

ENCAT1EC trigger and pulse width measurement

The register values to select the timer which performs ENCAT1EC trigger and pulse width measurement. (**Figure 29.20**, unit (3))

Register Value			
PIC1AREG31			
4	3	TAUJ0.TIN02	TAUJ0.TIN03
0	0	Not selected.	
0	1	ENCAT1IEC	—
1	0	—	ENCAT1IEC
1	1	ENCAT1IEC	ENCAT1IEC

Note: Write 0 (value after reset) to PIC1AREG30[20:19,11:10]

- ENCAT1EQ0 and ENCAT1EQ1 trigger and pulse width measurement
  The register values to select the timer which performs ENCAT1EQ0 and ENCAT1EQ1 trigger and pulse width measurement. (**Figure 29.20**, unit (4))

Register Value										
PIC1AREG31										
22	21	20	19	18	17	16	15	TAUD1.TIN00	TAUD1.TIN01	TAUD1.TIN02
0	0	0	0	0	0	0	0	Not selected.		
0	0	1	1	0	0	0	1	ENCAT1EQ0	ENCAT1EQ1	—
0	1	0	0	0	0	0	1	ENCAT1EQ1	—	ENCAT1EQ0
0	1	1	0	0	0	0	1	ENCAT1EQ1	ENCAT1EQ1	ENCAT1EQ0
0	1	1	1	0	0	0	1	ENCAT1EQ0	ENCAT1EQ1	ENCAT1EQ0

Note: Do not set the values other than the settings listed above for this function. Write 0 (value after reset) to PIC1ATAUD1SEL[5:0] and PIC1AREG30[20:19,9:6].

- Enable initialization of DT12 to DT10 circuits
  The register values to enable initialization of the DT12 to DT10 circuits.
  PIC1AINI11[2:0] = 111_B (initialized)

(4) Function

Detail of the function is described here.

The following figure shows the timing diagram.

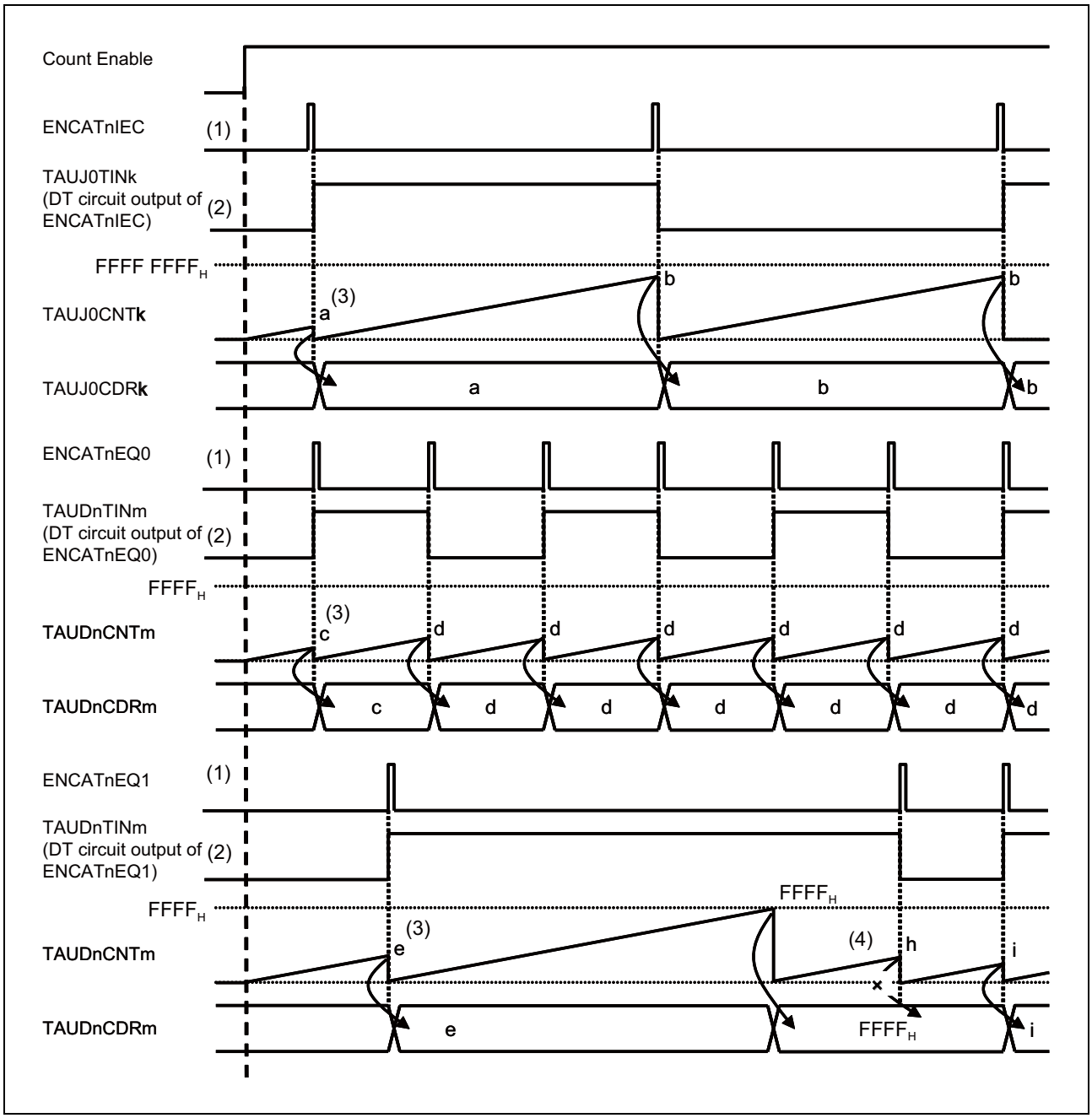

Figure 29.21 Timing Diagram of Trigger and Pulse Width Measurement

(1) Using the simultaneous start trigger function, the timers to be used are started simultaneously.

(2) The interrupt trigger signal output from ENCAn is converted to the level-sensitive toggle signal by the DT circuit and is output to TINm of TAUJ0 and TINm of TAUDn.

(3) The CNTm value is captured into CDRm on the TINm toggle timing and cleared.

(4) When an overflow occurs, the greatest count value ($FFFF_H$ for TAUDn and FFFF $FFFF_H$ for TAUJ0) is captured and the counter is cleared at the same time. The count value is not captured on the first trigger after the overflow. (When TAUDnCMORm.TAUDnCOS[1] = 1_B)

CAUTION

Operation at an overflow varies depending on the setting of TAUJ and TAUD. For the detail of the TAUJ setting, see Section 24.12.3, TAUJnTTINm Input Pulse Interval Measurement Function, see Section 23.12.7, TAUDnTTINm Input Pulse Interval Measurement Function. In this function, set the effective edge to be detected by TAUJ0 and TINm of TAUDn as both edges (rising and falling).

(5) Flow Chart

The following figure shows the setting flow of this function.

This flow chart can be set at both during ENCAn operation and while waiting for simultaneous start trigger.

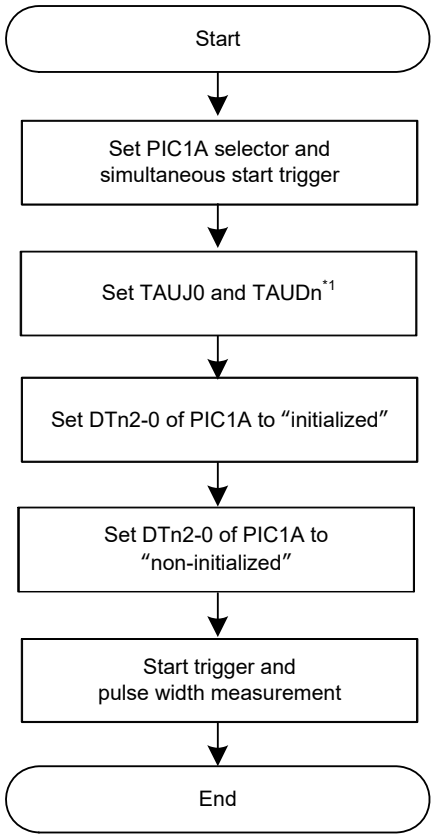

Note 1. For the setting of TAUDn, see **Section 23.12.7, TAUDnTTINm Input Pulse Interval Measurement Function**, for the setting of TAUJ0, see **Section 24.12.3, TAUJnTTINm Input Pulse Interval Measurement Function**.

The ENCAn registers to use this function are as follows.

ENCAnCTL[15:0] = xx00 0000 x00x $xxxx_B$

ENCAnIOC0[7:0] = 0000 0000_B

ENCAnIOC1[7:0] = (set any value)

"x" can be set arbitrarily. For the registers specifications, see **Section 28, Encoder Timer (ENCA)**.

29.2.3.6 Encoder Capture Trigger Select Function

(1) Overview

The function selects any of the ADCDnTRGm (ADCDn conversion start trigger m), TAUDnTINTm (TAUDn-CHm interrupt signal), and ENCAnI1 (signal 1 of the ENCAn external pin input).

(2) Configuration

The encoder capture trigger select function is realized by using ADCDnTRGm (ADCDn conversion start trigger m), TAUDnTINTm (TAUDn CHm interrupt signal), ENCAnI1 (ENCAn external pin input 1 signal), and PIC1A.

Block diagram of this function is shown in the following figure.

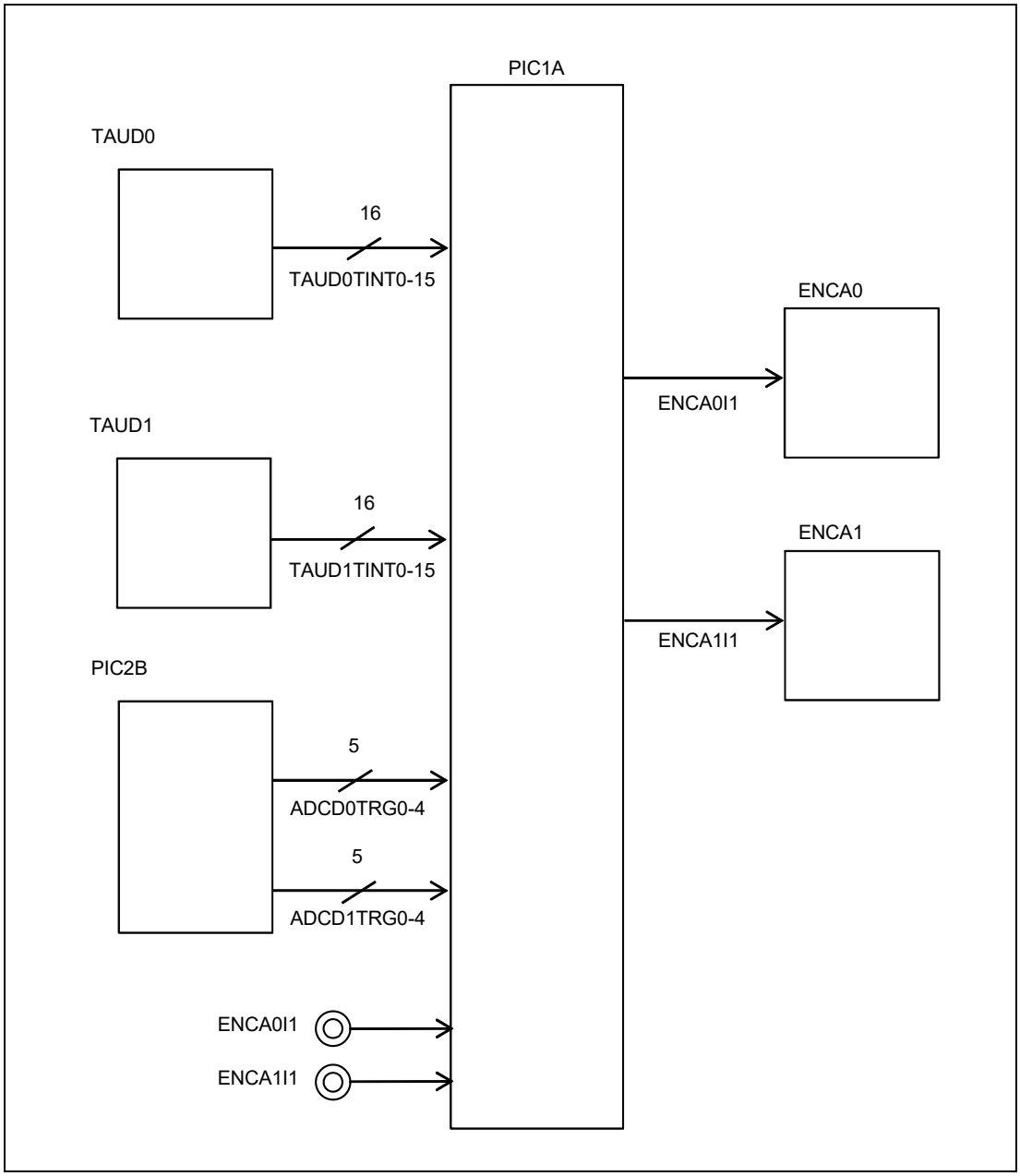

Figure 29.22 Block Diagram of Encoder Capture Trigger Select Function

An example of selecting CH0 of TAUD0 as a capture trigger input of ENCA0 is described as follows.

PIC1AENCSEL400[7] = 1_B

PIC1AENCSEL400[3:0] = 0000_B

PIC1AREG30[18] = 1_B

PIC1AREG30[5:2] = 0000_B

(3) Registers

Block diagram of PIC1A is shown in the following figure.

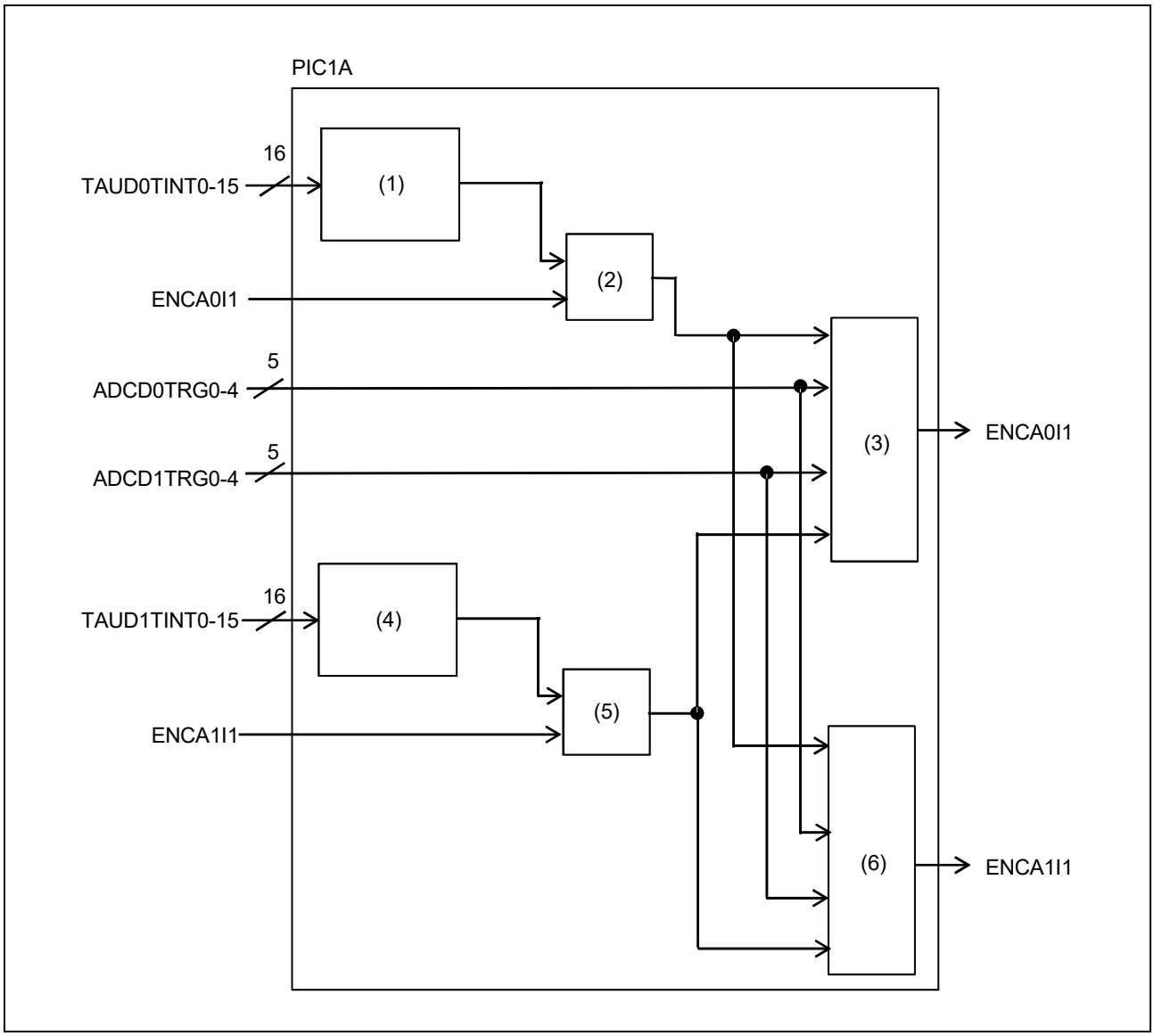

Figure 29.23 Block Diagram of PIC1A

The values of PIC1A registers used in this function are as follows.

ENCA0

(1) TAUD0TINTm selection
The register values to select TAUD0TINTm. Set 1 to the PIC1AENCSEL400[7] to select TAUD0TINTm.

Register Values					
PIC1AENCSEL400					
7	3	2	1	0	Output (1)
1	0	0	0	0	INTTAUD0I0
1	0	0	0	1	INTTAUD0I1
1	0	0	1	0	INTTAUD0I2
1	0	0	1	1	INTTAUD0I3
1	0	1	0	0	INTTAUD0I4
1	0	1	0	1	INTTAUD0I5
1	0	1	1	0	INTTAUD0I6
1	0	1	1	1	INTTAUD0I7
1	1	0	0	0	INTTAUD0I8
1	1	0	0	1	INTTAUD0I9
1	1	0	1	0	INTTAUD0I10
1	1	0	1	1	INTTAUD0I11
1	1	1	0	0	INTTAUD0I12
1	1	1	0	1	INTTAUD0I13
1	1	1	1	0	INTTAUD0I14
1	1	1	1	1	INTTAUD0I15

(2) TAUD0TINTm and ENCA0I1 pins selection
The register values to select either the output (1) or ENCA0I1.

Register Values	
PIC1AREG30	
18	Output (2)
1	Output (1)
0	ENCA0I1

(3) ENCA0I1 selection
The register values to select any of the output (2), output (5), ADCD0TRG0-4, or ADCD1TRG0-4.

Register Values				
PIC1AREG30				
5	4	3	2	ENCA0I1
0	0	0	0	Output (2)
0	0	0	1	Output (5)
0	0	1	0	ADCD0TRG4

Register Values				
PIC1AREG30				
5	4	3	2	ENCA0I1
0	0	1	1	ADCD0TRG3
0	1	0	0	ADCD0TRG2
0	1	0	1	ADCD0TRG1
0	1	1	0	ADCD0TRG0
0	1	1	1	ADCD1TRG4
1	0	0	0	ADCD1TRG3
1	0	0	1	ADCD1TRG2
1	0	1	0	ADCD1TRG1
1	0	1	1	ADCD1TRG0

Note: Do not set the values other than the settings listed above for this function.

ENCA1

(4) TAUD1TINTm selection

The register values to select TAUD1TINTm. Set 1 to the PIC1AENCSEL410[7] to select TAUD1TINTm.

Register Values					
PIC1AENCSEL410					
7	3	2	1	0	Output (4)
1	0	0	0	0	INTTAUD1I0
1	0	0	0	1	INTTAUD1I1
1	0	0	1	0	INTTAUD1I2
1	0	0	1	1	INTTAUD1I3
1	0	1	0	0	INTTAUD1I4
1	0	1	0	1	INTTAUD1I5
1	0	1	1	0	INTTAUD1I6
1	0	1	1	1	INTTAUD1I7
1	1	0	0	0	INTTAUD1I8
1	1	0	0	1	INTTAUD1I9
1	1	0	1	0	INTTAUD1I10
1	1	0	1	1	INTTAUD1I11
1	1	1	0	0	INTTAUD1I12
1	1	1	0	1	INTTAUD1I13
1	1	1	1	0	INTTAUD1I14
1	1	1	1	1	INTTAUD1I15

(5) TAUD1TINTm and ENCA1I1 pins selection

The register values to select either the output (4) or ENCA1I1.

Register Values	
PIC1AREG30	
21	OUtput (5)
1	OUtput (4)
0	ENCA1I1

(6) ENCA1I1 selection

The register values to select any of the output (2), output (5), ADCD0TRG0-4, or ADCD1TRG0-4.

Register Values				
PIC1AREG30				
15	14	13	12	ENCA1I1
0	0	0	0	Output (5)
0	0	0	1	Output (2)
0	0	1	0	ADCD0TRG4
0	0	1	1	ADCD0TRG3
0	1	0	0	ADCD0TRG2
0	1	0	1	ADCD0TRG1
0	1	1	0	ADCD0TRG0
0	1	1	1	ADCD1TRG4
1	0	0	0	ADCD1TRG3
1	0	0	1	ADCD1TRG2
1	0	1	0	ADCD1TRG1
1	0	1	1	ADCD1TRG0

Note: Do not set the values other than the settings listed above for this function.

(4) Function

Function

Detail of the function is described with an example of selecting TAUDnTINTm as a capture trigger signal.

The following figure shows the timing diagram.

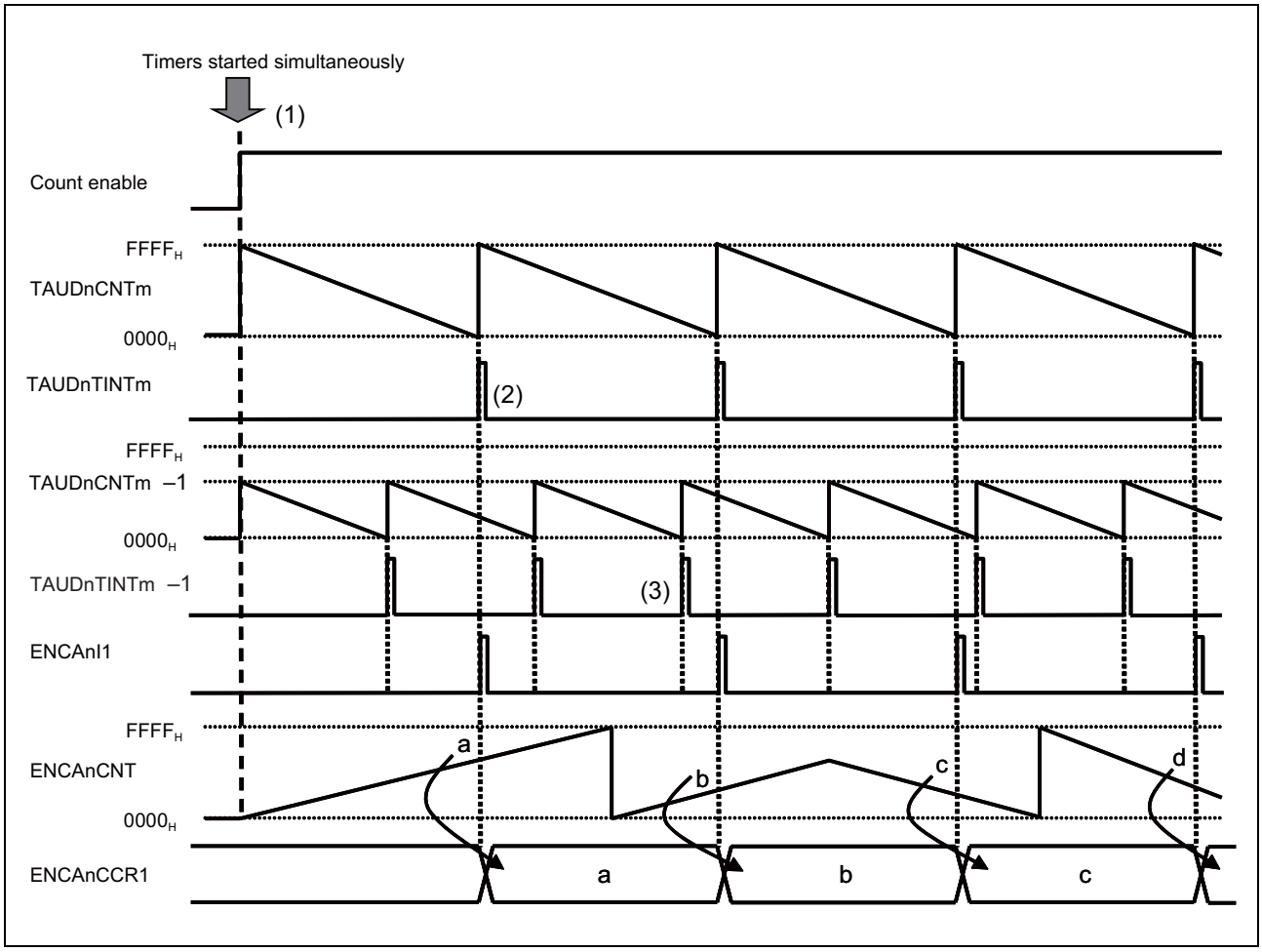

Figure 29.24 Timing Diagram of Encoder Capture Trigger Select Function (TAUDnTINTm)

(1) Using the simultaneous start trigger function, the timers to be used are started simultaneously.

(2) On generation of an effective edge of TAUDnTINTm, ENCAn captures ENCAnCNT.

Do not select ENCAn interrupt trigger signal (INTENCATnI1) as the ADCDn trigger described in **Section 29.3.3.1, ADCD Trigger Select Function**, the correct operation cannot be performed because the following loop occurs: ADCDnTRG1 generation → ENCAn capture operation → INTENCAnI1 generation by capture operation → ADCDnTRG1 generation.

The following figure shows a timing chart of the loop paths of PIC1A, PIC2B, and ENCAn.

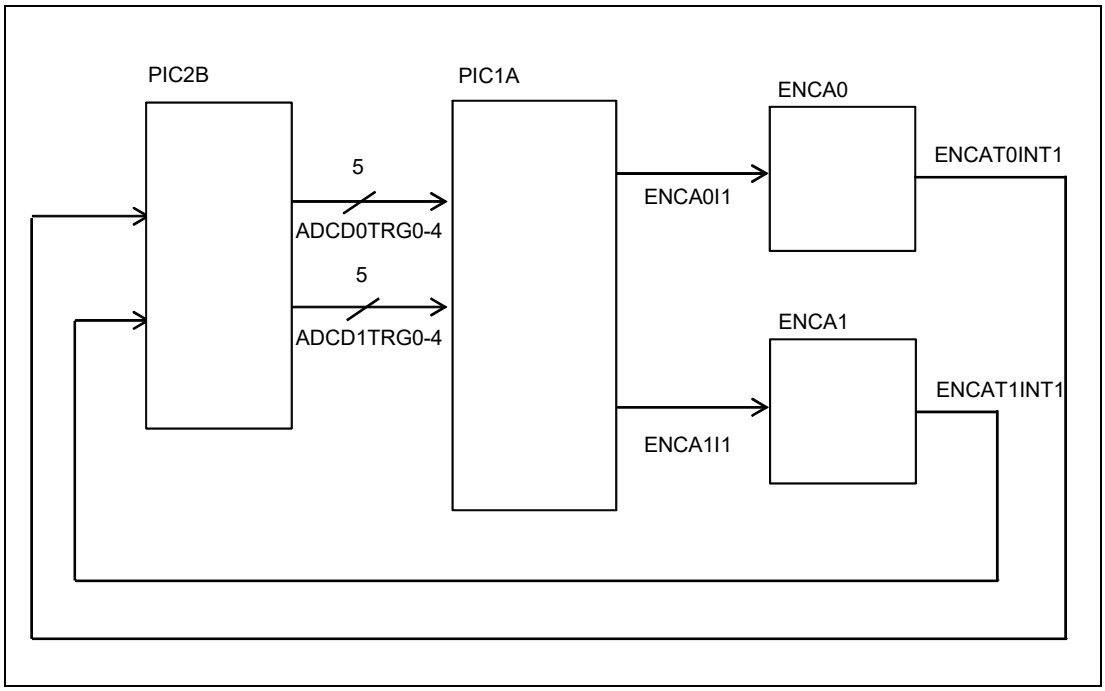

Figure 29.25 Timing Chart of Loop Paths of PIC1A, PIC2B, and ENCAn

(5) Flow Chart

Select the encoder capture trigger before starting the encoder timer.

ENCAn settings to use this function are described as follows.

ENCAnCTL[15:0] = 0000 001x 0 00x $xxxx_B$

ENCAnIOC0[7:0] = 0000 $01xx_B$

ENCAnIOC1[7:0] = (set any value)

"x" can be set arbitrarily. For the registers specifications, see **Section 28, Encoder Timer (ENCA)**.

29.2.3.7 Two-Phase Encoder Control Function (Control Method 1)

(1) Overview

This function allows switching of the output patterns of the motor control function (TSG3n) in 120-DC mode using the two-phase encoder control function (ENCAn).

(2) Configuration

Switching of output pattern in 120-DC mode by encoder result is realized by using ENCAn and TSG3n, and PIC1A in combination. The following figure describes the block diagram of two-phase encoder control function (control method 1).

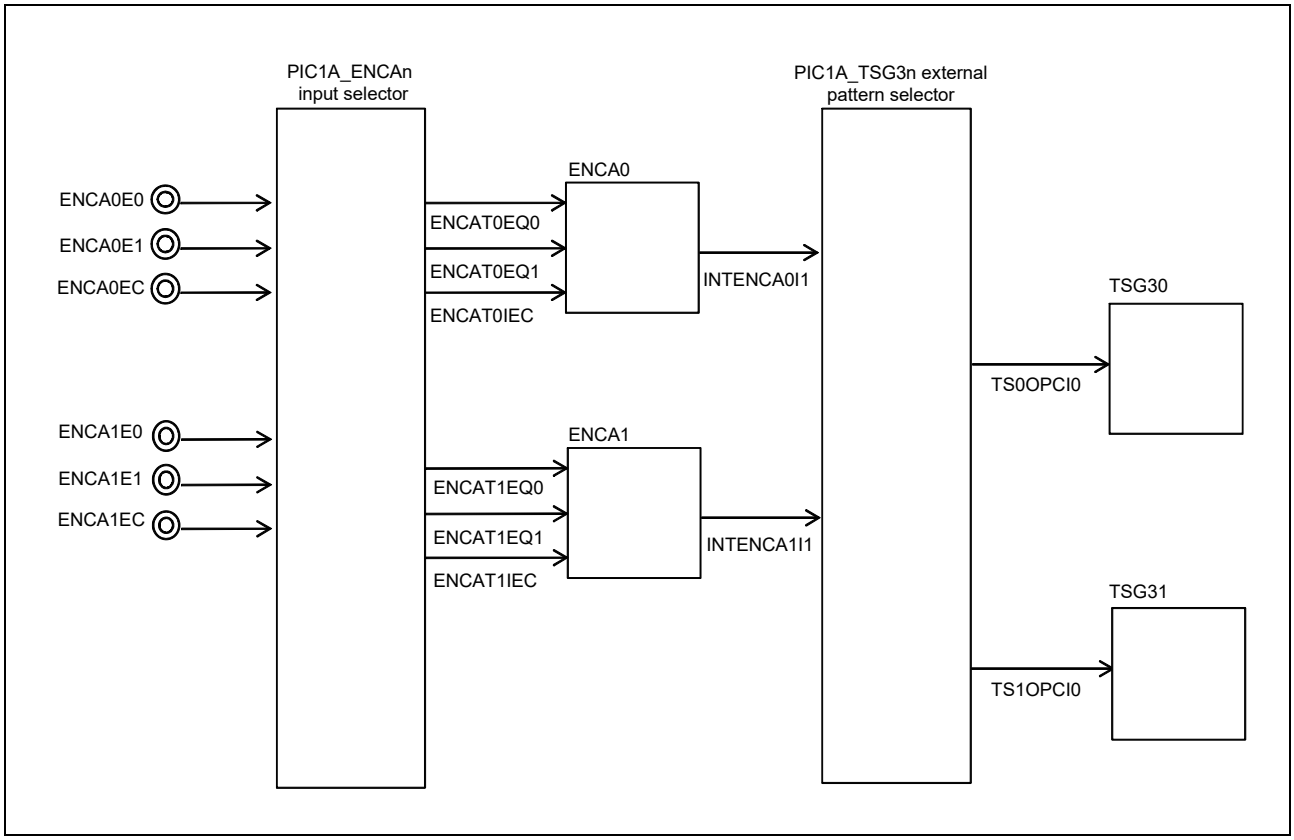

Figure 29.26 Block Diagram of Two-Phase Encoder Control Function (Control Method 1)

The configuration of two-phase encoder control function (control method 1) is described as follows.

- [PIC1A_ENCAn input selector]
  ENCAnE0, ENCAnE1, and ENCAnEC pin inputs are selected and output as ENCATnEQ0, ENCATnEQ1,and ENCATnIEC.
- [ENCAn]
  INTENCAnI1 is output by two-phase encoder processing.
- [PIC1A_TSG3n external pattern selector]
  INTENCAnI1 is selected and output to TS0OPCI0 or TS1OPCI0.
- [TSG3n]
  Output pattern in 120-DC mode is switched by TSG3nOPCI0.

(3) Registers

The values of PIC1A registers used in this function are as follows.

PIC1A_ENCAn input selector

The register values to output ENCAn pin inputs (ENCAnE0, ENCAnE1, and ENCAnEC) as ENCATnEQ0, ENCATnEQ1, and ENCATnIEC.

PIC1AREG30[22] = 0_B

PIC1AREG30[20:19] = 00_B

PIC1AREG30[17:16] = 00_B

PIC1AREG30[11:6] = 000000_B

PIC1AREG30[1:0] = 00_B

PIC1A_TSG3n external pattern selection

The register values to select the interrupt signal to be input as TSG30 external pattern.

Register Values				
PIC1AREG50				
10	8	6	5	TS0OPCI0
X	0	0	1	INTENCA0I1
0	X	1	0	INTENCA1I1

Note: Do not set the values other than the settings listed above for this function.

The register values to select the interrupt signal to be input as TSG31 external pattern.

Register Values				
PIC1AREG51				
10	8	6	5	TS1OPCI0
X	0	0	1	INTENCA0I1
0	X	1	0	INTENCA1I1

Note: Do not set the values other than the settings listed above for this function.

(4) Function

Detail of the function is described using the two-phase encoder control function (method 1) at up count (normal rotation) as an example.

The following figure shows the timing diagram.

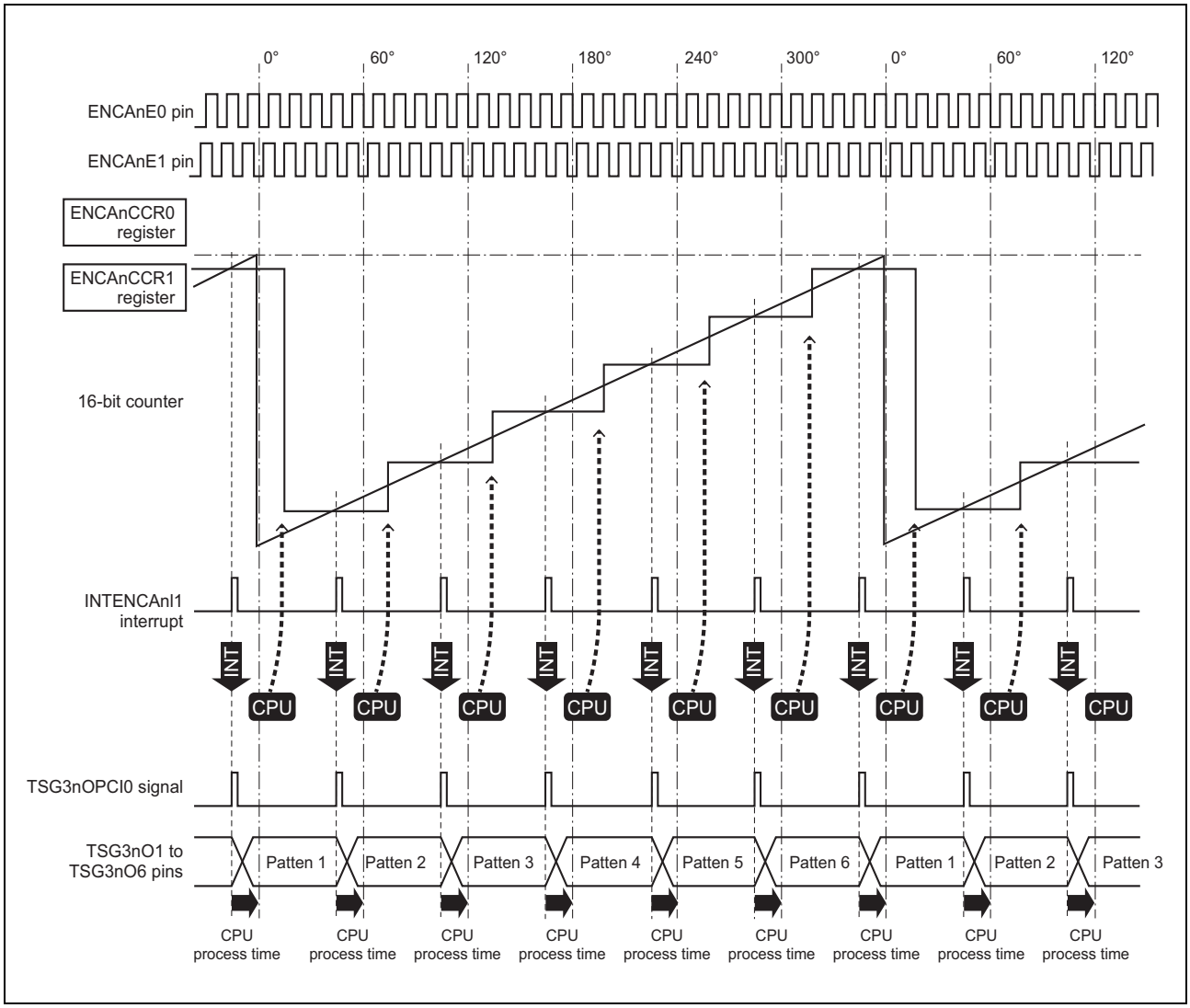

Figure 29.27 Timing Diagram of Two-Phase Encoder Control Function (Control Method 1) at Up Count (Normal Rotation)

(1) A match of the value of the encoder counter and ENCAnCCR1 allows INTENCAnI1 to be generated, and the pattern is output from the TSG3nO1 to TSG3nO6 pins.

(2) CPU calculates the next timing to switch output patterns by an interrupt processing and set the value to ENCAnCCR1.

(3) With a match of the value of the encoder counter and ENCAnCCR0 the encoder counter is cleared.

CAUTION

It is necessary to set ENCAnCCR1 at each pattern switch (each INTENCAnI1 interrupt). It is necessary to match the initial output pattern of timer TSG3n to the set value of ENCAnCCR1 before start.

Switching between normal and reverse rotations of output patterns should be set with the TSG3nPSC bit of the TSG3nOPT0 register.

The following figure shows the timing diagram.

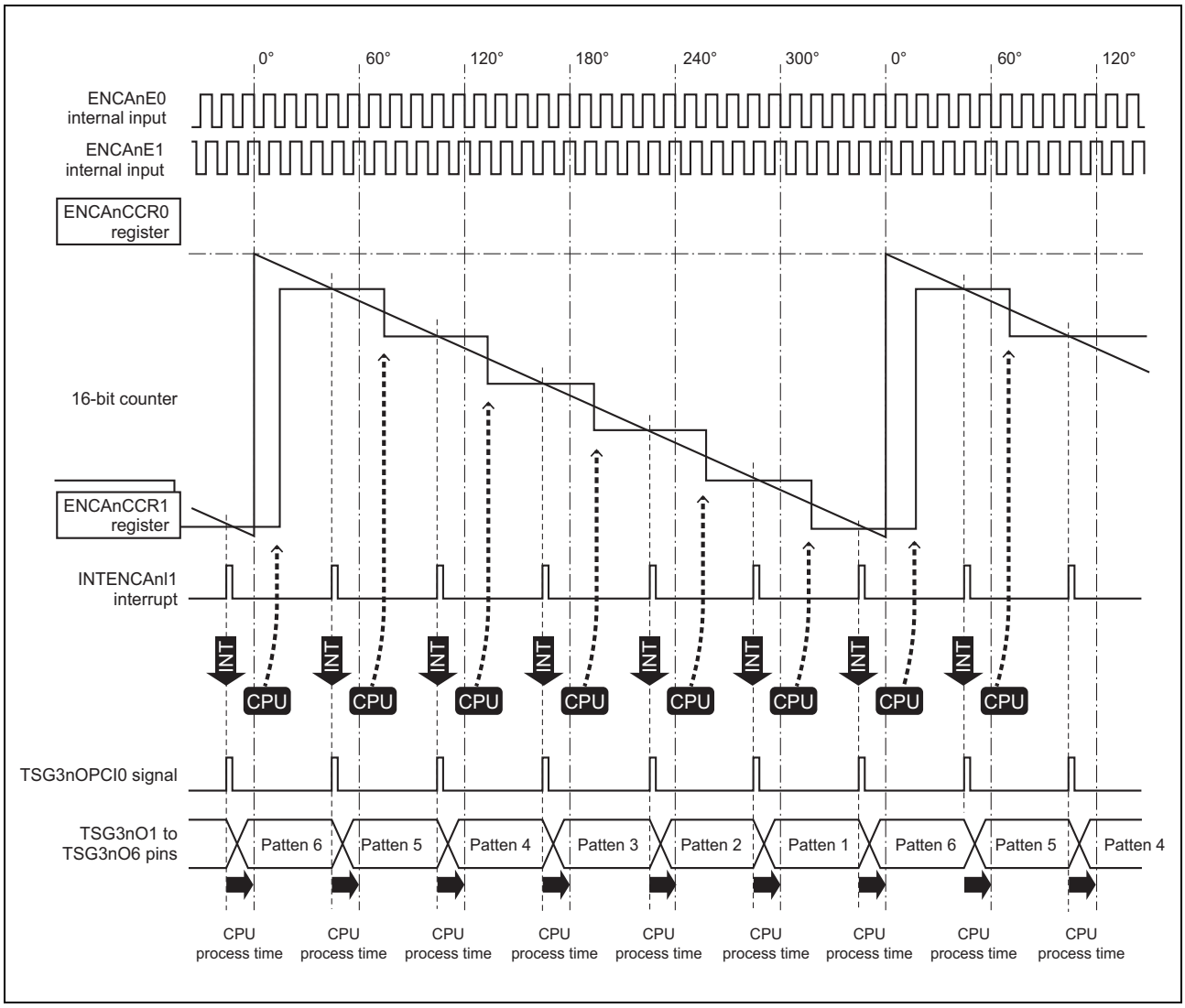

Figure 29.28 Timing Diagram of Two-Phase Encoder Control Function (Control Method 1) at Down Count (Reverse Rotation)

(5) Flow Chart

The following figure shows the setting flow of this function.

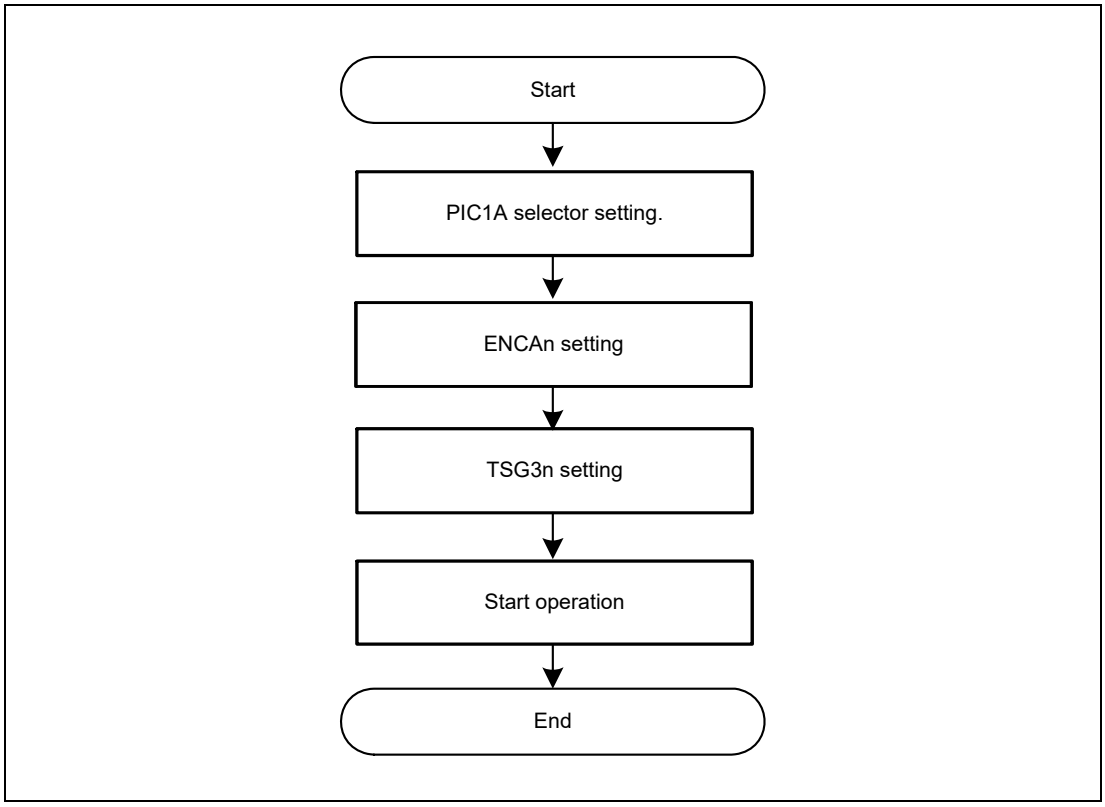

The following figure shows the flow chart after interrupt processing.

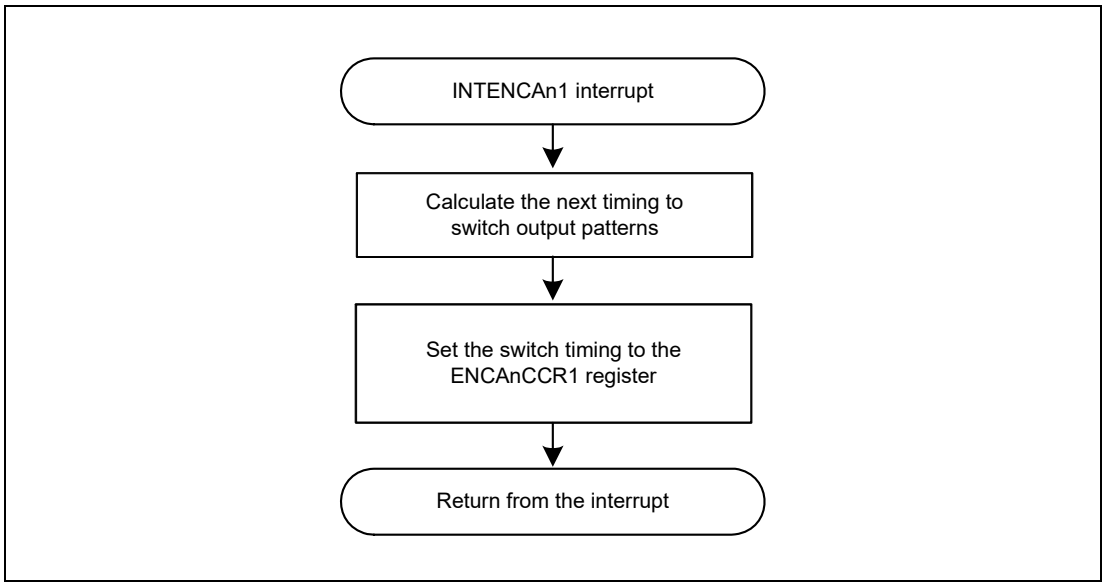

The values of ENCAn registers used in this function are as follows.

ENCAnCTL[15:0] = 1000 0000 000x 01xx$_B$

ENCAnIOC1[7:0] = 0000 00xx$_B$

ENCAnCCR0= (set any value)

ENCAnCCR1= (set any value)

ENCAnCNT= (set any value)

"x" can be set arbitrarily. For the registers specifications, see **Section 28, Encoder Timer (ENCA)**.

The values of TSG3n registers used in this function are as follows.

TSG3nCTL0[7:0] = 000x 0011$_B$

TSG3nCTL3[7:0] = 0000 00xx$_B$

TSG3nCTL4[15:0] = 0000 0001 xxx0 0000$_B$

TSG3nIOC0[7:0] = 0111 1110$_B$

TSG3nIOC2[15:0] = 0xxx xxx0 0000 0000$_B$

TSG3nOPT0[7:0] = 0011 1xx0$_B$

TSG3nOPT1[7:0] = 0000 0xxx$_B$

TSG3nCMP0 = (set any value)

TSG3nCMP1W,5W,9W = (set any value)

TSG3nCMP1,5,9 = (set any value)

TSG3nPAT0W,1W = (set any value)

TSG3nDTC0W,1W = (set any value)

"x" can be set arbitrarily. For the registers specifications, see Section 25, Motor Control Timer (TSG3).

29.2.3.8 Two-Phase Encoder Control Function (Control Method 2)

(1) Overview

This function allows switching the advance and retard control of the motor control function (TSG3n) output patterns in 120-DC mode using the two-phase encoder control function (ENCAn).

(2) Configuration

The similar configuration as the **Section 29.2.3.7, Two-Phase Encoder Control Function (Control Method 1)** is applied this function. See **(2) Configuration** of **Section 29.2.3.7, Two-Phase Encoder Control Function (Control Method 1)**.

(3) Registers

The similar configuration as the **Section 29.2.3.7, Two-Phase Encoder Control Function (Control Method 1)** is applied this function. See **(3) Registers** in **Section 29.2.3.7, Two-Phase Encoder Control Function (Control Method 1)**.

(4) Function

Detail of the function is described using **Section 29.2.3.8, Two-Phase Encoder Control Function (Control Method 2)** as an example.

The following figure shows the timing diagram.

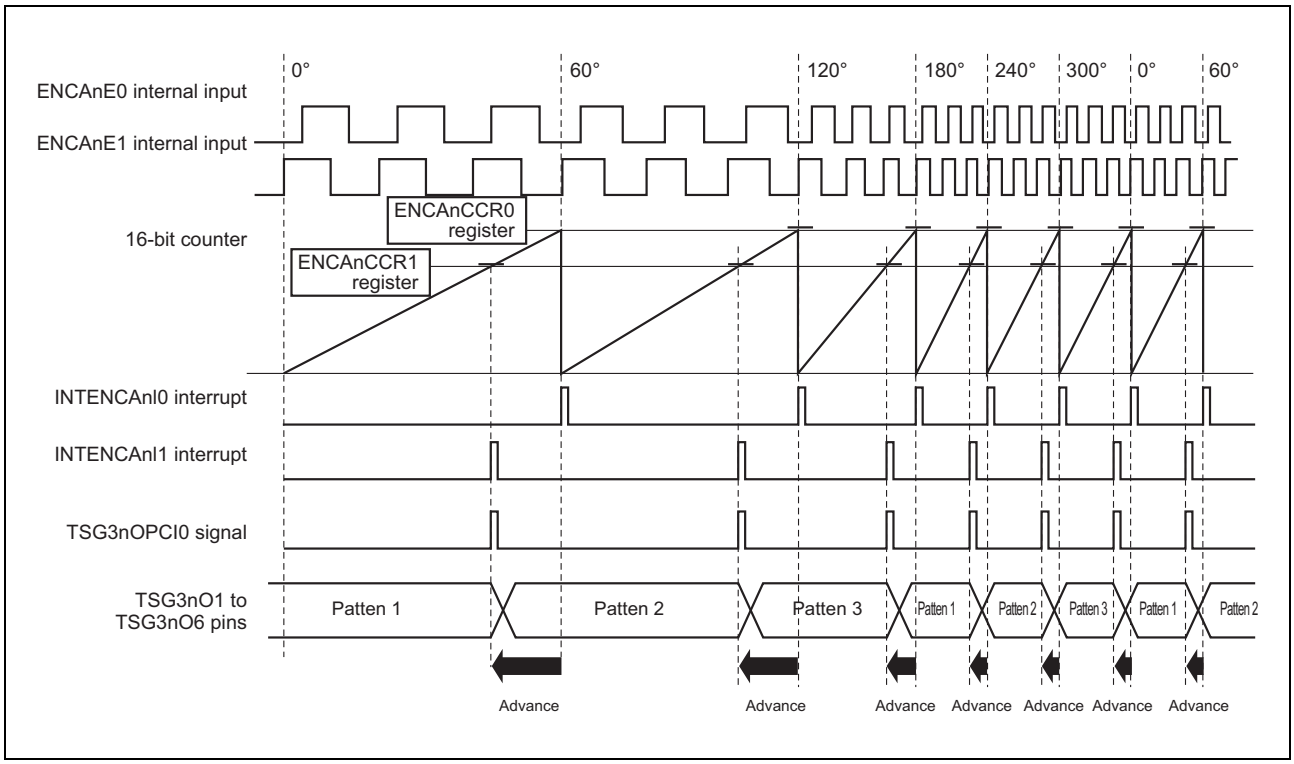

Figure 29.29 Timing Diagram of Two-Phase Encoder Control Function (Method 2) at Advance Control (Normal Rotation)

(1) A match of the value of the encoder counter and ENCAnCCR1 (corresponds to the output pattern switch position for TSG3n) allows INTENCAnI1 to be generated, and the pattern is output from the TSG3nO1 to 6 pins.

(2) With a match of the value of the encoder counter and ENCAnCCR0 (corresponds to the phase advance and retard of the switch position), INTENCAnI0 is generated and the encoder counter is cleared.

CAUTION

It is necessary to set ENCAnCCR1 at each pattern switch (each INTENCAnI1 interrupt). It is necessary to match the initial output pattern of timer TSG3n to the set value of ENCAnCCR0 before start.

Switching between normal and reverse rotations of output patterns should be set with the TSG3nPSC bit of the TSG3nOPT0 register.

The following figure shows the timing diagram at retard control (normal rotation).

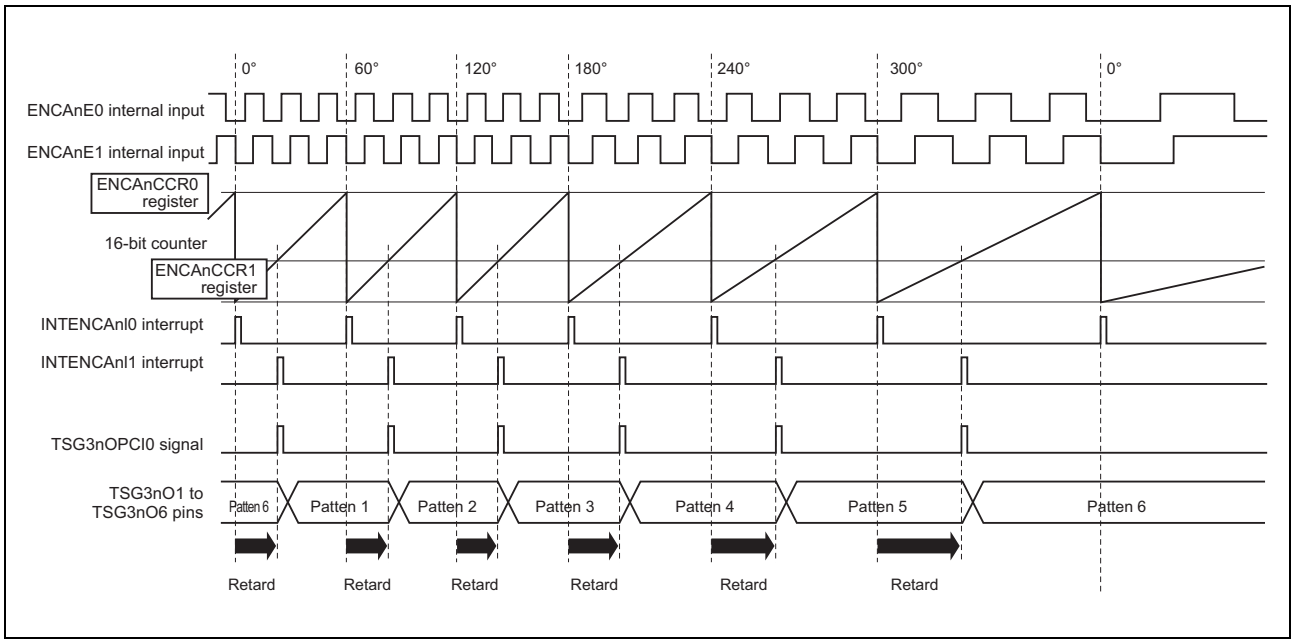

Figure 29.30 Timing Diagram of Two-Phase Encoder Control Function (Method 2) at Retard Control (Normal Rotation)

By setting greater value to ENCAnCCR1 than that of ENCAnCCR0, TSG3n output pattern phase can be retarded.

NOTE

This function can be used for advance control and retard control both at up count and down count.

(5) Flow Chart

The flow charts for this function are shown as follows.

Flow chart of main routine.

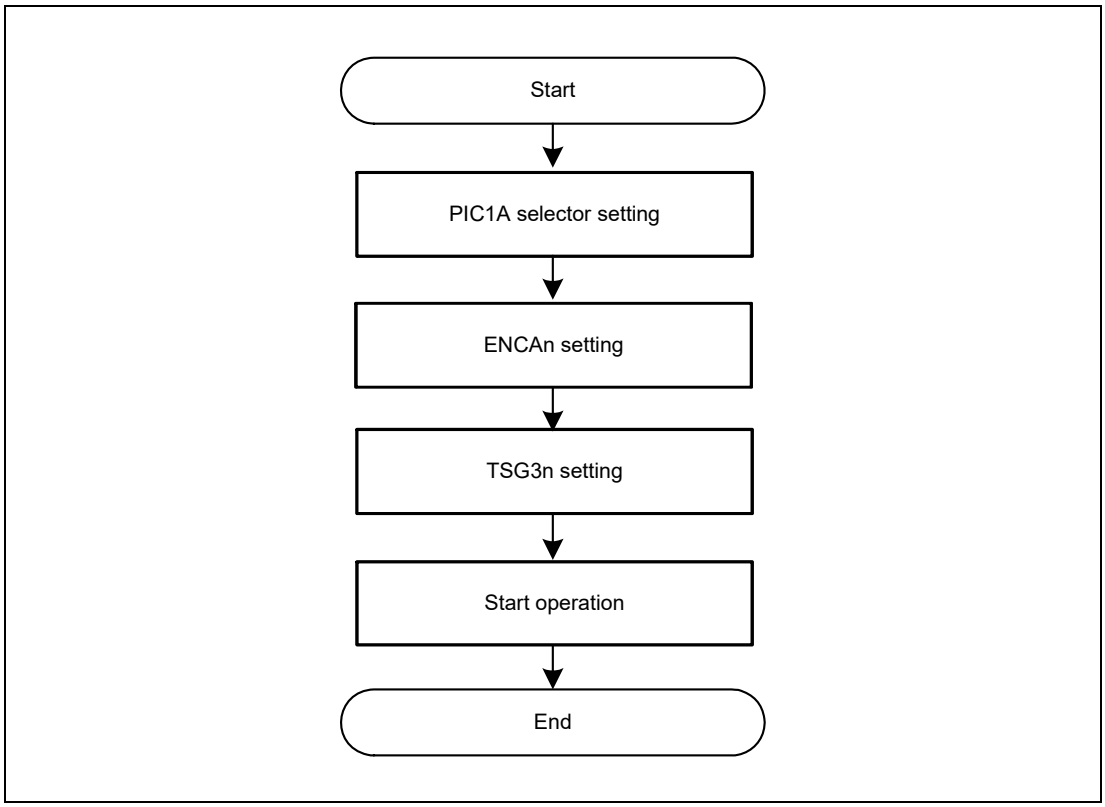

Flow chart of ENCAnCCR1 rewrite processing at advance control.

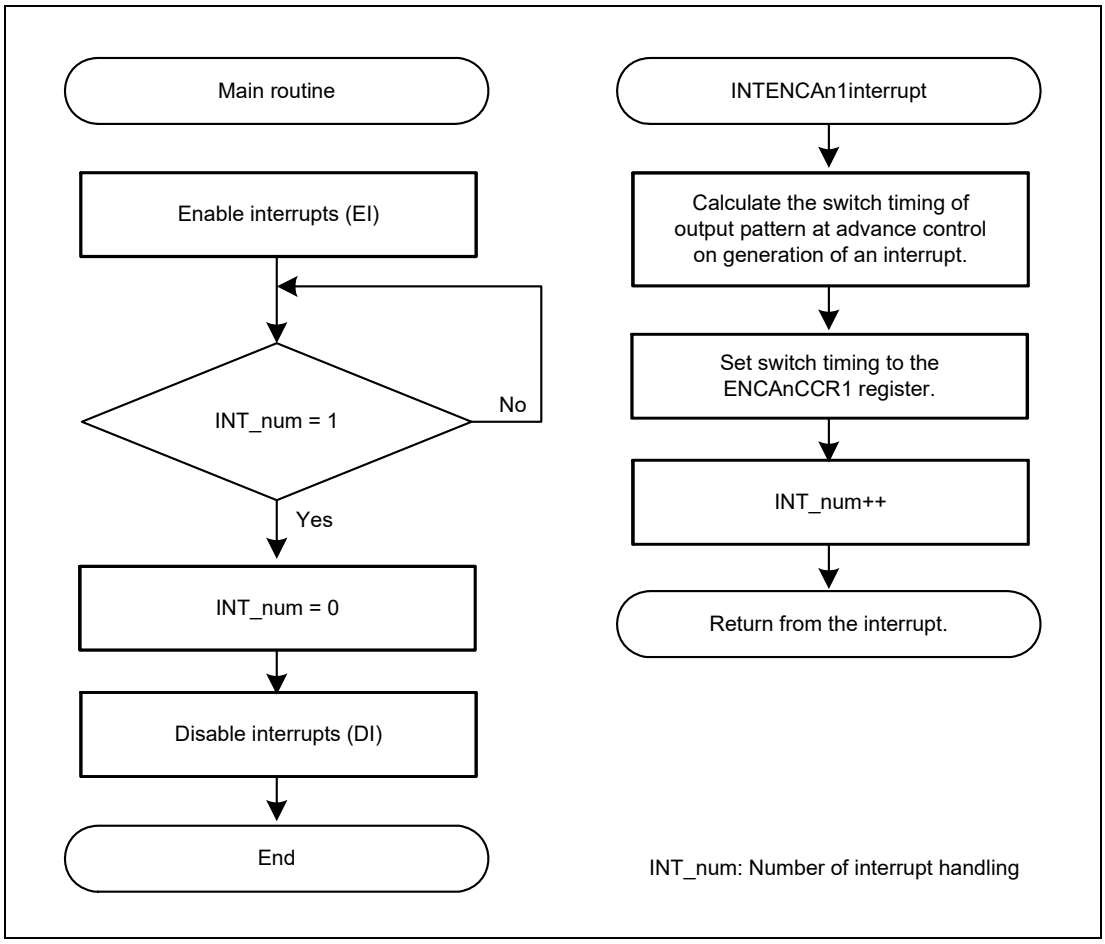

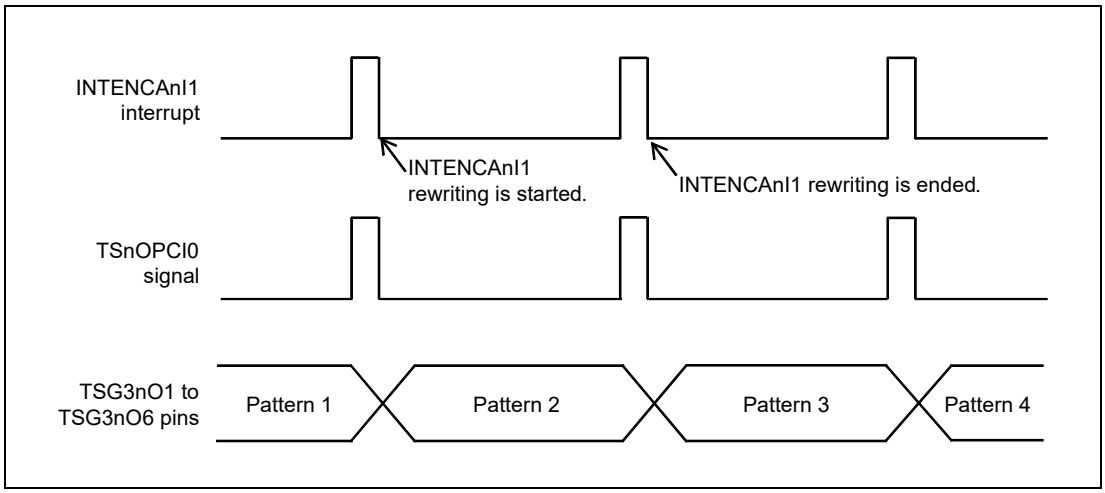

Flow chart of ENCAnCCR1 rewrite processing at retard control.

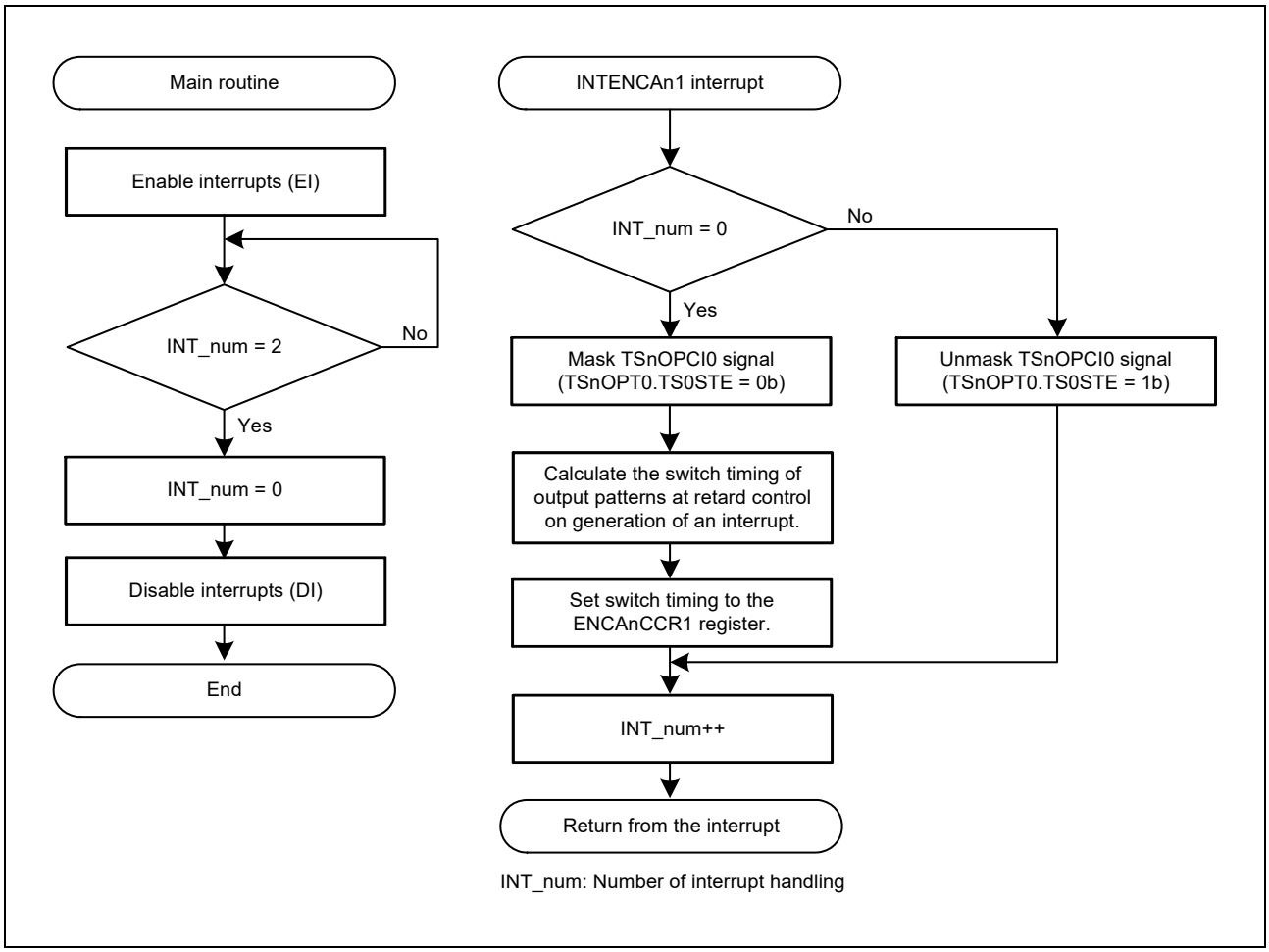

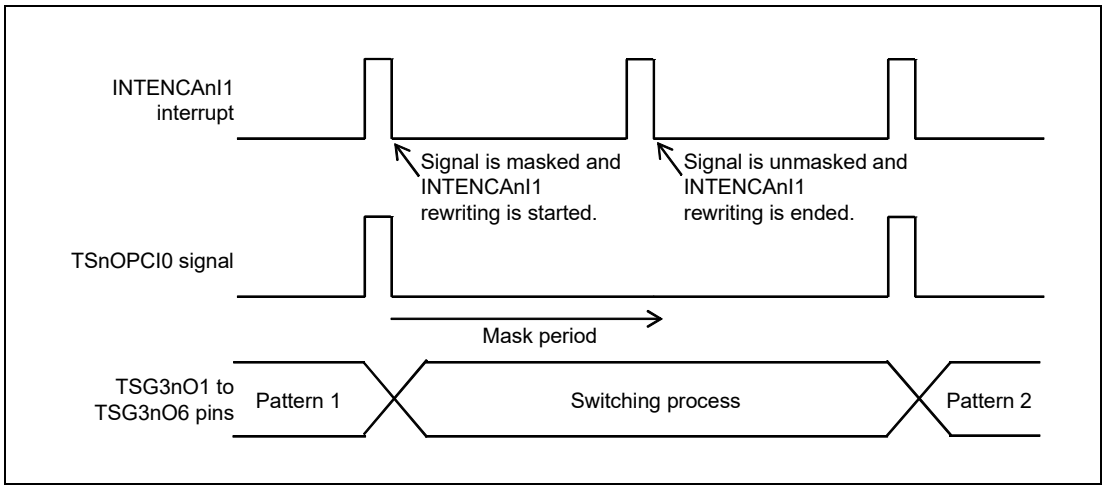

The register settings for ENCAn to use this function are described as follows.

ENCAnCTL[15:0] = 1000 0000 000x 01xx$_B$

ENCAnIOC1[7:0] = 0000 00xx$_B$

ENCAnCCR0 = (set any value)

ENCAnCCR1 = (set any value)

ENCAnCNT = (set any value)

"x" can be set arbitrarily. For the registers specifications, **Section 28, Encoder Timer (ENCA)**.

The register settings for TSG3n to use this function are described as follows.

TSG3nCTL0[7:0] = 000x 0011$_B$

TSG3nCTL3[7:0] =0000 00xx$_B$

TSG3nCTL4[15:0] = 0000 0001 xxx0 0000$_B$

TSG3nIOC0[7:0] = 0111 1110$_B$

TSG3nIOC2[15:0] = 0xxx xxx0 0000 0000$_B$

TSG3nOPT0[7:0] = 0011 1xx0$_B$

TSG3nOPT1[7:0] = 0000 0xxx$_B$

TSG3nCMP0 = (set any value)

TSG3nCMP1W, 5W, 9W = (set any value)

TSG3nCMP1, 5, 9 = (set any value)

TSG3nPAT0W, 1W = (set any value)

TSG3nDTC0W, 1W = (set any value)

"x" can be set arbitrarily. For the registers specifications, **Section 25, Motor Control Timer (TSG3)**.

29.2.3.9 Three-Phase Pulse Input Control Function

(1) Overview

This function allows variable phase control of TSG3n pattern output in 120-DC mode using TSG3n and TAUDn.

The following diagram shows the method of three-phase pulse input control.

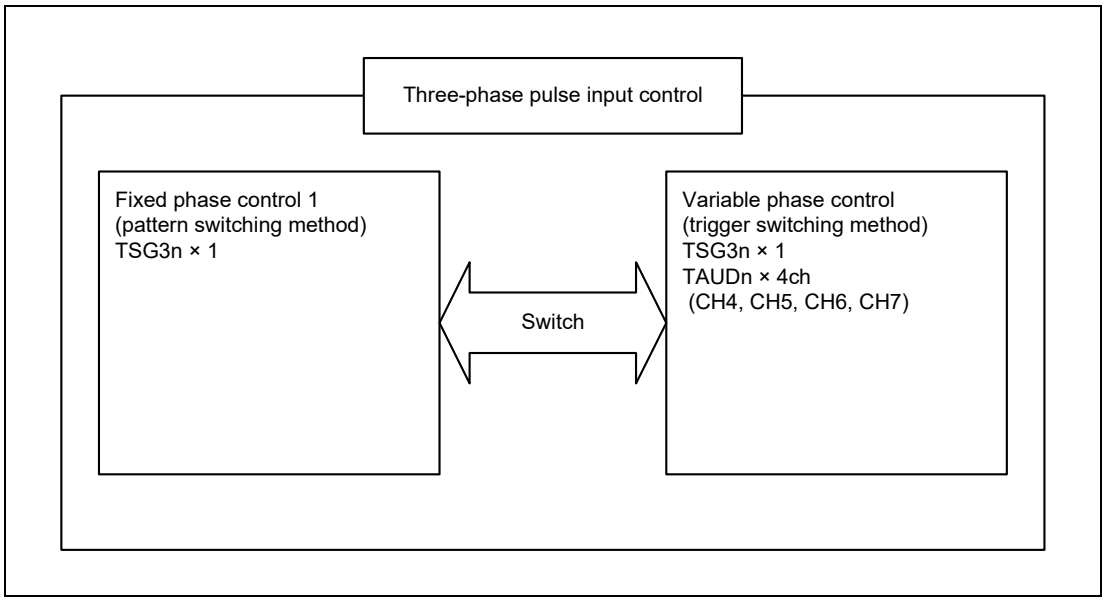

Figure 29.31 Control Method of Three-Phase Pulse Input Control Function

Control Method	Function
Fixed phase control 1 (pattern switching method)	Outputs a fixed pattern at constant rotation angle.
Variable phase control (trigger switching method)	Varies the phase by arbitrary angle (or time) up to ±60 degrees with reference to the rotation angle and outputs the pattern.

(2) Configuration

Three-phase pulse input control function is realized by using three-phase pulse input and TAUDn offset trigger mode, and PIC1A in combination.

The following figure shows the block diagram of three-phase pulse input control function.

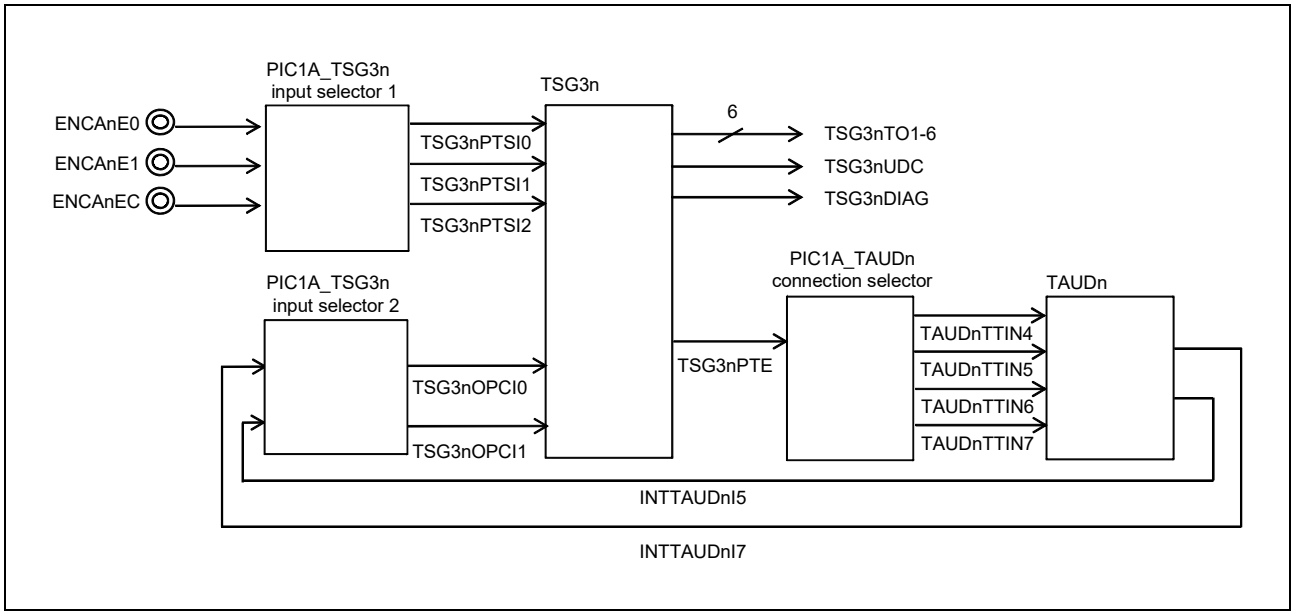

Figure 29.32 Block Diagram of Three-Phase Pulse Input Control

The configuration of this function is described as follows.

- [PIC1A_TSG3n input selector 1]
  ENCAnE0, ENCAnE1, and ENCAnEC pin inputs are selected and output to TSG3nPTSI0 to TSG3nPTSI02.
- [TSG3n]
  Patterns set in TSGnTO1 to TSGnTO6 are output in response to the input of TSG3nPTSI0 to TSG3nPTSI02 signals. TSG3nPTE is toggled each time the output patterns are switched.
- [PIC1A_TAUDn connection selector]
  TSG3nPTE input is selected and output to TAUDnTTIN4 to TAUDnTTIN 7.
- [TAUDn]
  Interrupt signals INTTAUDnI5 and INTTAUDnI7 for output pattern phase generation are output with the offset trigger mode.
- [PIC1A_TSG3n input selector 2]
  INTTAUDnI5 and INTTAUDnI7 inputs are selected and output as TSG3nOPCI0 and TSG3nOPCI1.

(3) Registers

Block diagram of PIC1A is shown in the following figure.

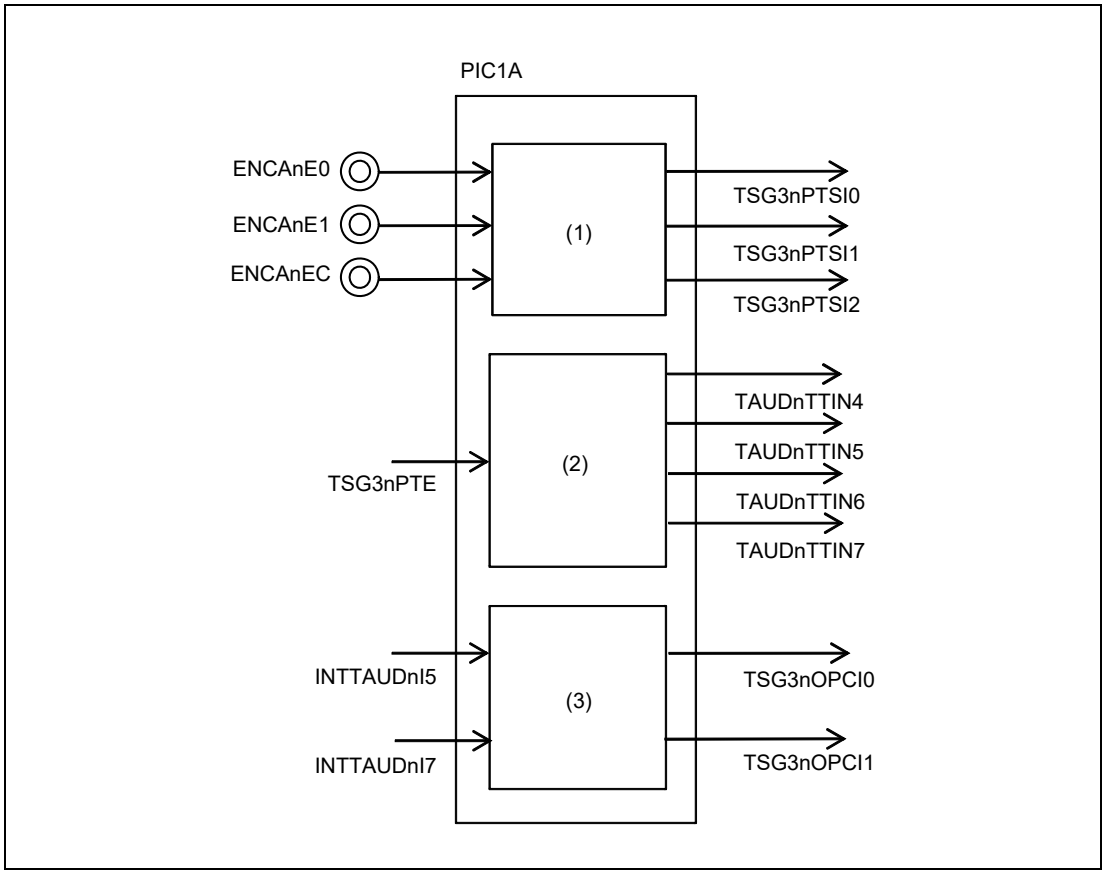

Figure 29.33 Block Diagram of PIC1A

The values of PIC1A registers used in this function are as follows.

Unit (1): PIC1A_ TSG3n input selector 1

The values to output ENCA0E0, ENCA0E1, and ENCA0EC as TSG30PTSI0 to TSG30PTSI2

PIC1ATSGHALLSEL[0] = 1_B

PIC1AREG50[0] = 0_B

The values to output ENCA1E0, ENCA1E1, and ENCA1EC as TSG31PTSI0 to TSG31PTSI2

PIC1ATSGHALLSEL[1] = 1_B

PIC1AREG51[0] = 1_B

Unit (2): PIC1ATAUDn connection selector

The values to output TSG3nPTE to TAUDnTTIN4 to TAUDnTTIN7.

PIC1AREG2n0[11:8] =1010_B

PIC1AREG2n0[3:0] = 1111_B

PIC1ATAUDnSEL[15:8] = 00_H

Unit (3): PIC1A_ENCAn input selector 2

The values to output INTTAUDnI5 and INTTAUDnI7 to TSG3nOPCI0 and TSG3nOPCI1.

PIC1AREG5n[7:5] = 011_B

(4) Function

Detail of the three-phase pulse input control function is described here.

The following figure shows the timing diagram.

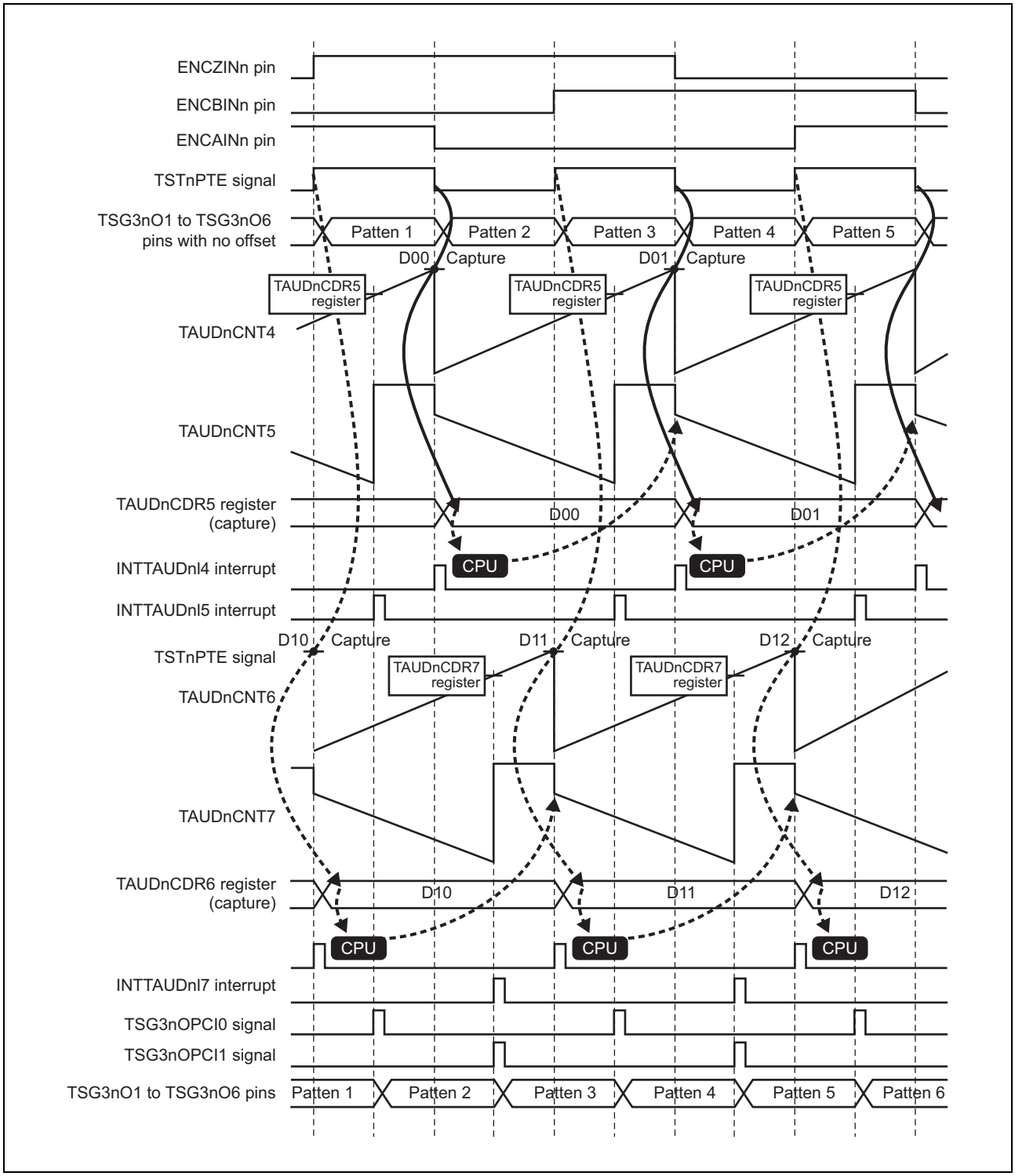

Figure 29.34 Three-Phase Pulse Input Control Function

(1) The output patterns are switched by the TSG pattern switching method on detection of ENCAn pin signal. The TSTnPTE signal toggles each time the patterns are switched.

(2) TAUDnCNT6 and TAUDnCNT4 are captured at the rising edge and falling edge of the TSTnPTE signal. The interval to switch patterns is calculated according to the captured value.

(3) CPU calculates the phase of the next output pattern and set the values to TAUDnCNT5 and TAUDnCNT7. The signals corresponding to the values are output as TSG3nOPCI0 and TSG3nOPCI1. At this time, the patterns delayed for the set phase are output by switching the output patterns by the trigger switching method.

The following table lists the relation between the value set to TAUDnCNTm and the captured value in TAUDnCDR (m-1) (m = 5, 7).

TAUDnCNTm Register Setting	TSG3n Patten Output Switch Timing
TAUDnCNTm = 0000_H	The patterns switched on detection of an edge of TSTnPTE signal with a delay of up to one cycle of the clock signal being counted by TAUDn is generated.
TAUDnCNTm = Captured value	The patterns are switched on detection of an edge of TSTnPTE signal.
TAUDnCNTm < Captured value	The patterns are switched on the timing after the phase delayed from detection of an edge of TSTnPTE signal.
TAUDnCNTm > Captured value	Setting prohibited

An example of switch operation from fixed phase control 1 to variable phase control

The following figure shows an example of switch operation from fixed phase control 1 to variable phase control.

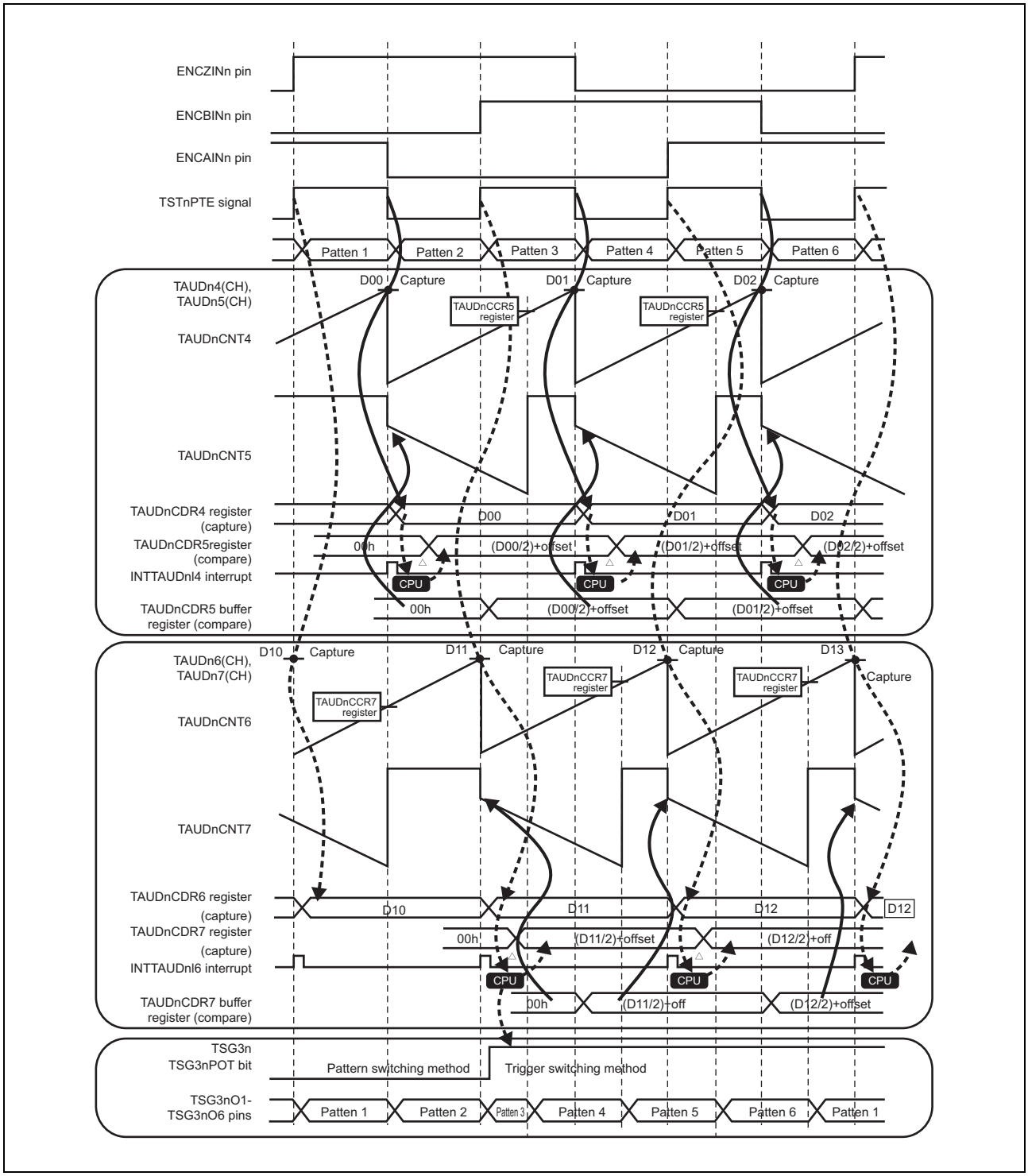

Figure 29.35 An Example of Switch Operation from Fixed Phase Control 1 to Variable Phase Control

The output pattern is changed to the trigger switching method by changing the TSG3nPOT bit from low level to high level, and the variable phase control is enabled.

An example of switch operation from variable phase control to fixed phase control 1

The following figure shows an example of switch operation from variable phase control to fixed phase control 1.

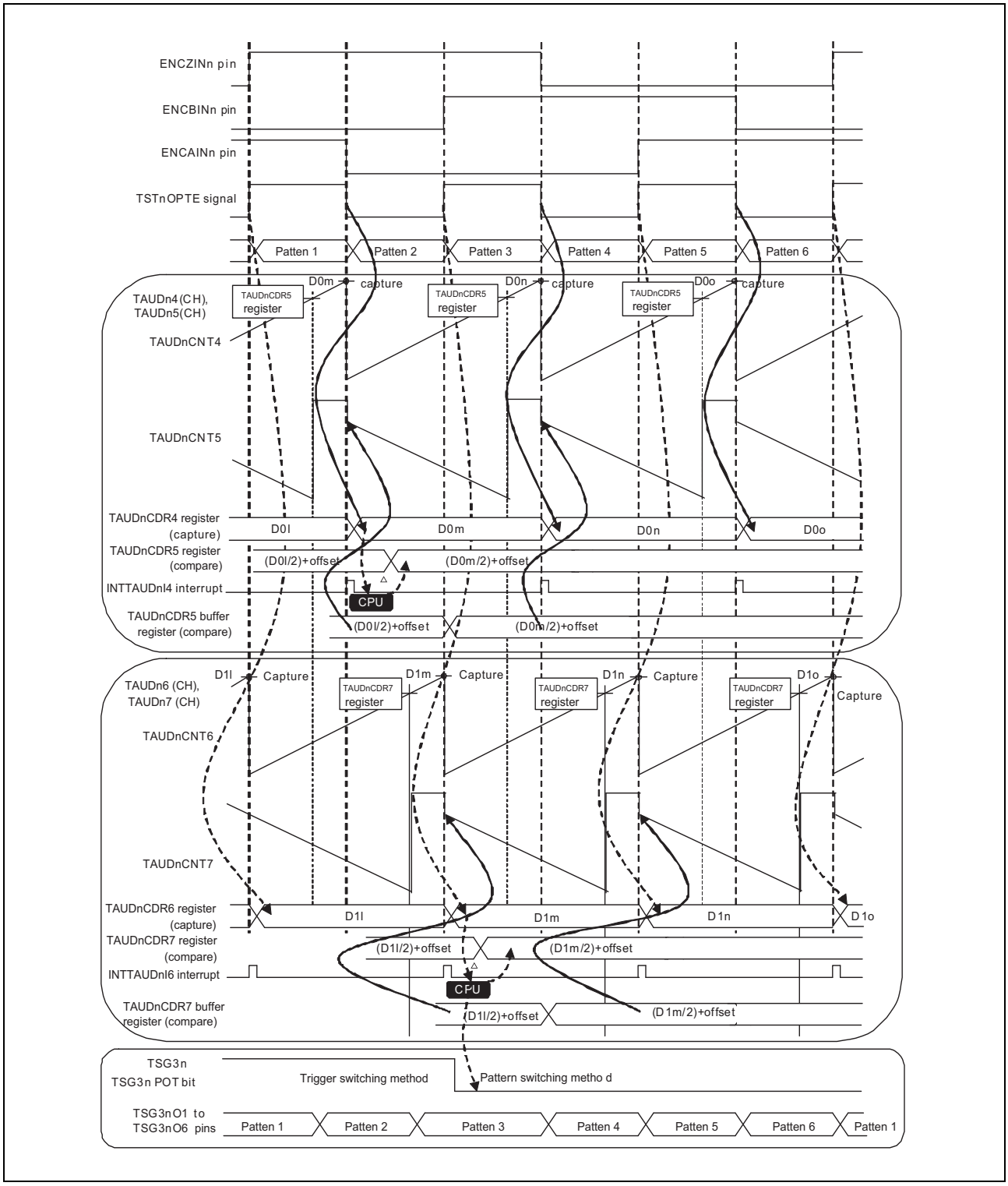

Figure 29.36 Example of Switch Operation from Variable Phase Control to Fixed Phase Control 1

The output pattern is changed to the pattern switching method by changing the TSG3nPOT from high level to low level, and the fixed phase control 1 is enabled.

(5) Flow Chart

The flow charts for this function are shown as follows.

Flow chart of main routine

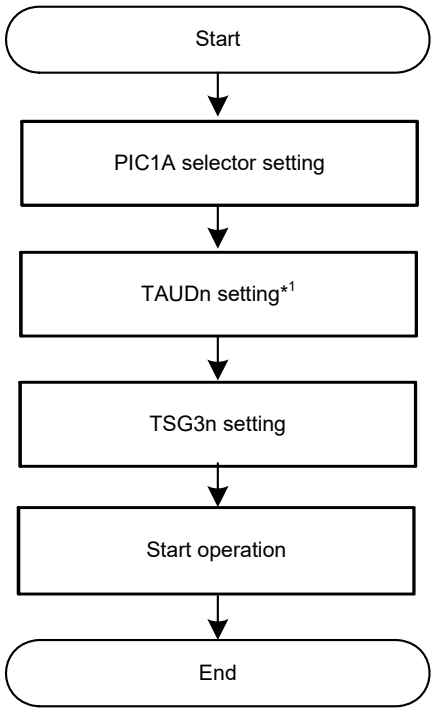

Note 1. As for TAUDn setting, please refer to **Section 23.13.4, Offset Trigger Output Function**.

Flow chart of rewriting of TAUDnCDR5 and TAUDnCDR7 during operation

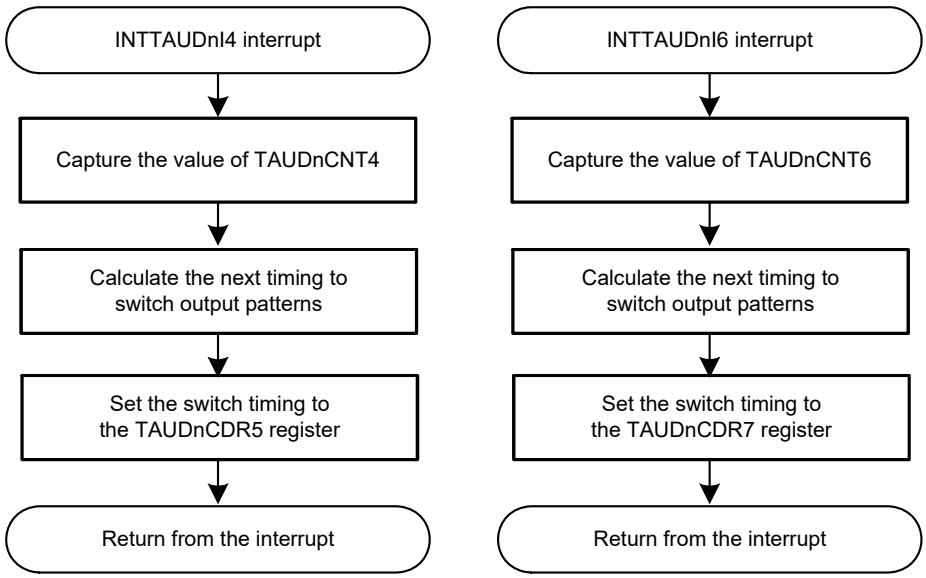

Note: For the settings of TAUDn, see **Section 23.13.4, Offset Trigger Output Function**.

The values of TSG3n registers used in this function are as follows.

TSG3nCTL0[7:0] = $0000\ 0011_B$

TSG3nCTL3[7:0] = $0000\ 00xx_B$

TSG3nCTL4[15:0] = $0000\ 0001\ xxx0\ 0000_B$

TSG3nIOC0[7:0] = $0111\ 1110_B$

TSG3nIOC1[7:0] = $0001\ xxxx_B$

TSG3nIOC2[15:0] = $0xxx\ xxx0\ 0000\ 0000_B$

TSG3nOPT0[7:0] = $0011\ 1xx0_B$

TSG3nOPT1[7:0] = $0000\ 0xxx_B$

TSG3nCMP0 = (set any value)

TSG3nCMP1W,5W,9W = (set any value)

TSG3nCMP1,5,9 = (set any value)

TSG3nPAT0W,1W = (set any value)

TSG3nDTC0W,1W = (set any value)

"x" can be set arbitrarily. For the registers specifications, see Section 25, Motor Control Timer (TSG3).

29.2.3.10 Three-Phase Encoder Function

(1) Overview

The function allows three-phase external pattern inputs (TSG3nPTSI0 to TSG3nPTSI2) using ENCAn

(2) Configuration

The three-phase encoder control function is realized by using TSG3n, ENCAn, and PIC1A in combination. The following figure shows the block diagram of three-phase encoder control function.

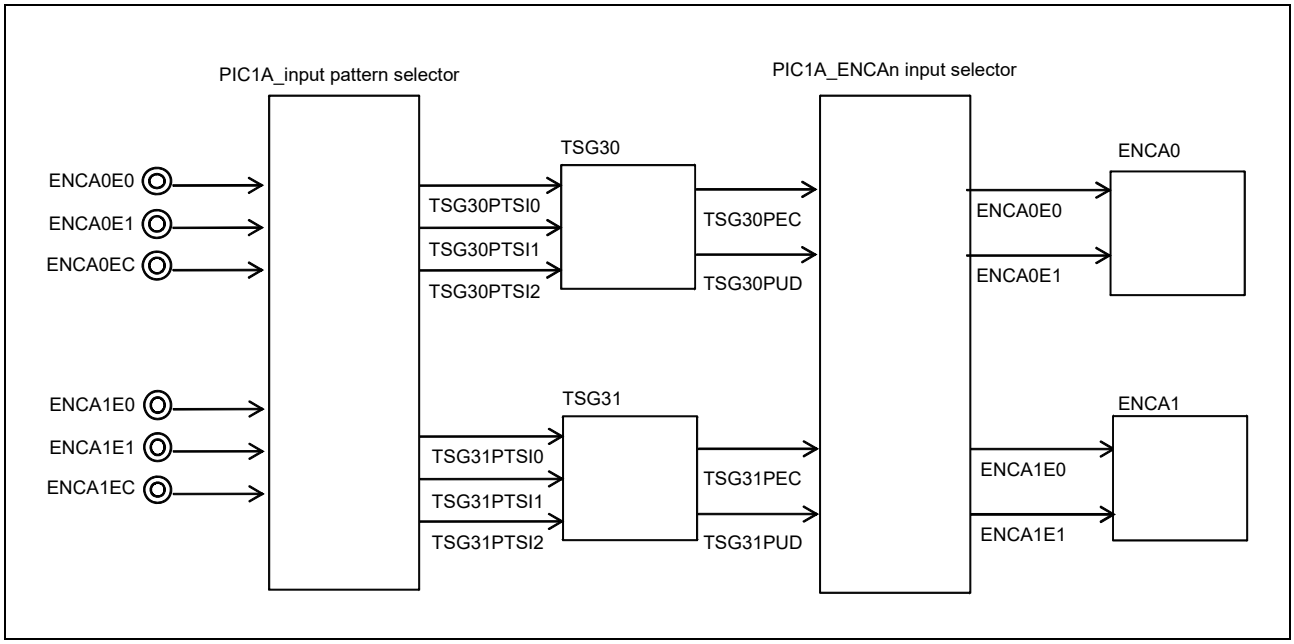

Figure 29.37 Block Diagram of Three-Phase Encoder Control Function

The configuration of this function is described as follows.

- [PIC1A_input pattern selector]
  ENCAnE0, ENCAnE1, and ENCAnEC pin inputs are selected and output to TSG3nPTSI0 to TSG3nPTSI2.
- [TSG3n]
  Patterns set in TSG3nPEC are output in response to the input of the TSG3nPTSI0 to TSG3nPTSI2 signals. TSG3nPUD is output depending on rotation in normal or reverse.
- [PIC1A_ENCAn input selector]
  TSG3nPEC is selected and output to ENCAnE0. TSG3nPUD is selected and output to ENCAnE1.
- [ENCAn]
  ENCAnE0 and ENCAnE1 are encoded.

(3) Registers

Block diagram of PIC1A is shown in the following figure.

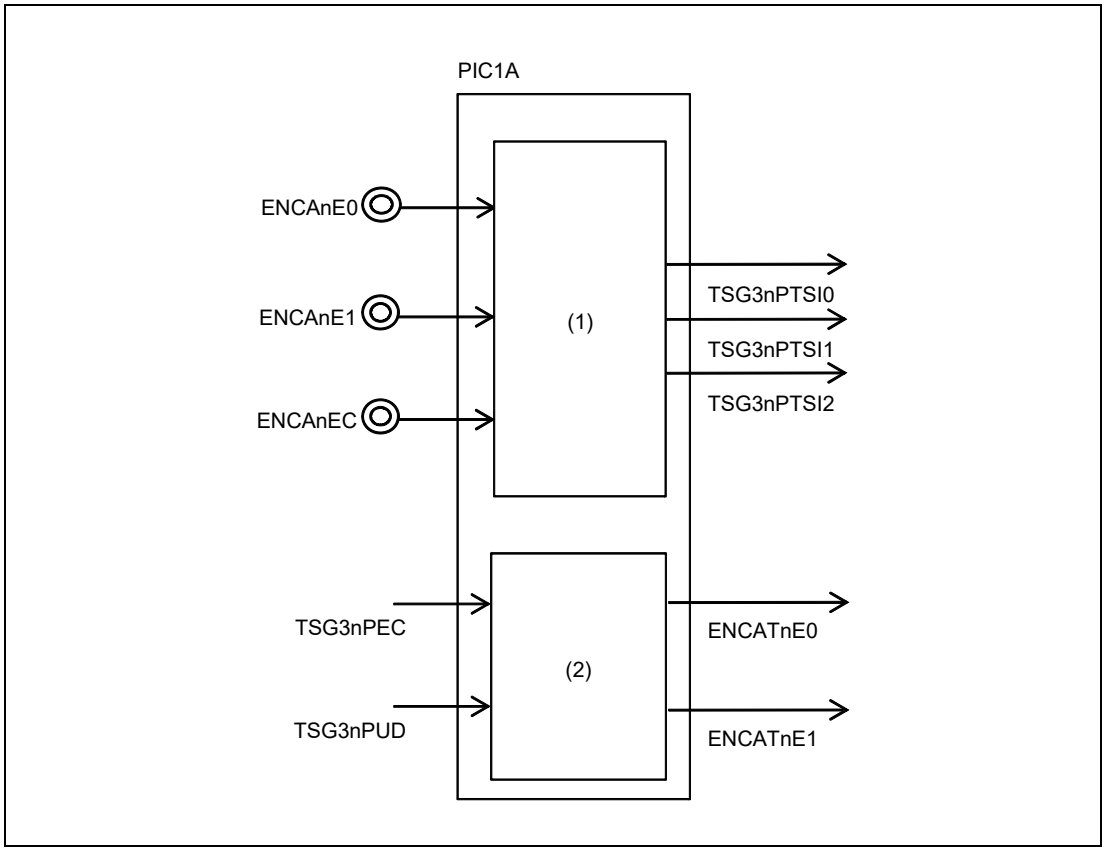

Figure 29.38 Block Diagram of PIC1A

The register settings for PIC1A to use this function are described as follows.

Unit (1): PIC1A_ input pattern selector

The values to output ENCA0E0, ENCA0E1, and ENCA0EC as TSG30PTSI0 to TSG30PTSI2

PIC1ATSGHALLSEL[0] = 1_B

PIC1AREG50[0] = 0_B

The value to output ENCA1E0, ENCA1E1, and ENCA1EC as TSG31PTSI0 to TSG31PTSI2

PIC1ATSGHALLSEL[1] = 1_B

PIC1AREG51[0] = 1_B

Unit (2): PIC1A_ENCAn input selector

The values to output the TS0PEC and TS0PUD as ENCA0E0 and ENCA0E1, respectively

PIC1AREG30[22] = 0_B

PIC1AREG30[1:0] = 11_B

The values to output the TS1PEC and TS1PUD as ENCA1E0 and ENCA1E1, respectively

PIC1AREG30[9:8] = 10_B

PIC1AREG30[7:6] = 10_B

(4) Function

Detail of the three-phase encoder function is described as follows.

The following figure shows the timing diagram.

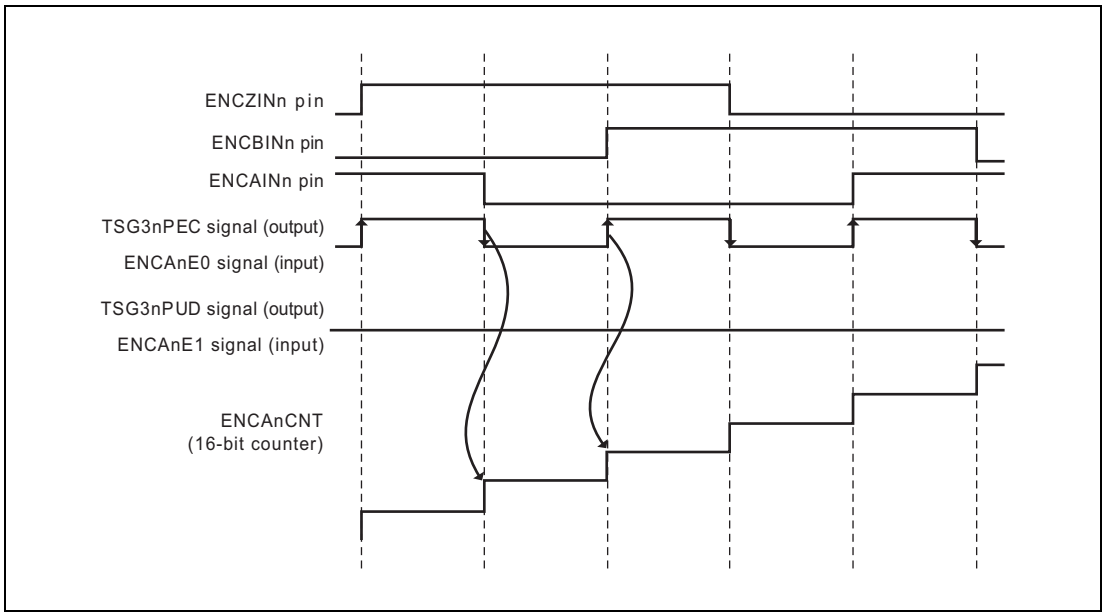

Figure 29.39 Timing Diagram of Three-Phase Encoder Function_ENCAnUDS1 and ENCAnUDS0 = 00_B

(1) When the low level is input to ENCAnE1, the count is incremented each time an active edge is input to ENCAnE0.

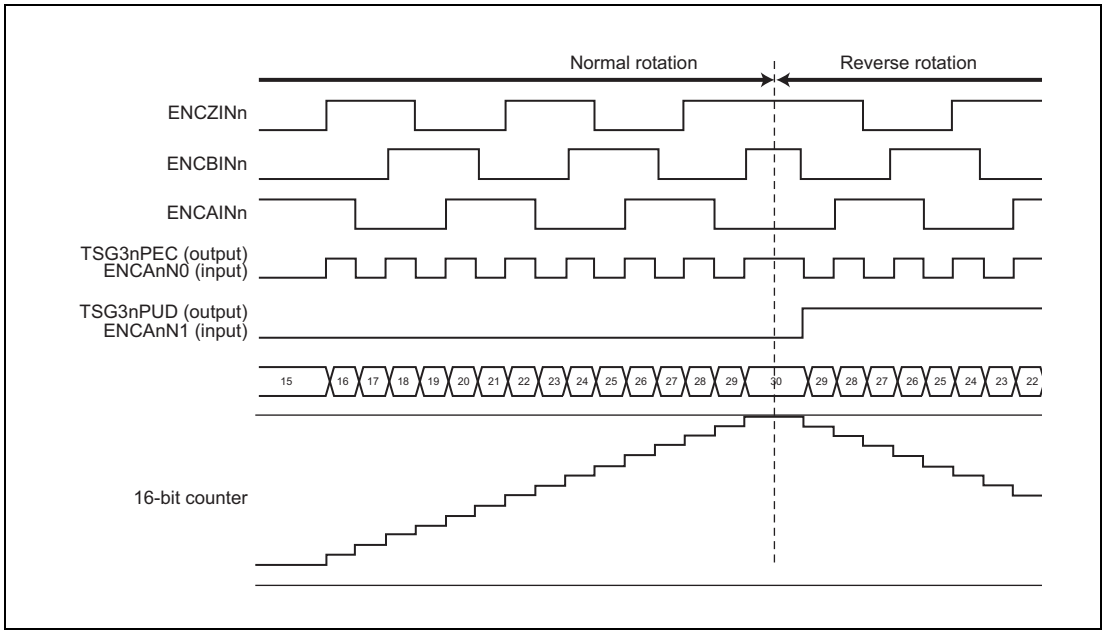

Figure 29.40 Timing Diagram of Three-Phase Encoder Function_Normal Rotation/ Reverse Rotation

(5) Flow Chart

Set PIC before using the three-phase encoder control function.

The values of ENCAn registers used in this function are as follows.

ENCAnCTL[15:0] = xx00 00xx 000x $xx00_B$

ENCAnIOC1[7:0] = 0000 $00xx_B$*1

ENCAnCCR0 = (set any value)

ENCAnCCR1 = (set any value)

ENCAnCNT = (set any value)

"x" can be set arbitrarily. For the registers specifications, **Section 28, Encoder Timer (ENCA)**.

Note 1. Except for 00_B (no edge detected) for ENCAnIOC1[1:0] because edge detection is necessary.

The values of TSG3n registers used in this function are as follows.

TSG3nCTL0[7:0] = $0000\ 0001_B$

TSG3nCTL3[7:0] = $0000\ 00xx_B$

TSG3nCTL4[15:0] = 0000 000x xxxx $xxxx_B$

TSG3nIOC0[7:0] = $0xxx\ xxx0_B$

TSG3nIOC1[7:0] = $0001\ xxxx_B$

TSG3nIOC2[15:0] = $0xxx\ xxx0\ 0000\ 0000_B$

TSG3nOPT0[7:0] = $0xxx\ xxx0_B$

TSG3nOPT1[7:0] = $0000\ 0xxx_B$

TSG3nCMP0 = (set any value)

TSG3nCMP1W,5W,9W = (set any value)

TSG3nCMP1,5,9 = (set any value)

TSG3nPAT0W,1W = (set any value)

TSG3nDTC0W,1W = (set any value)

"x" can be set arbitrarily. For the registers specifications, **Section 25, Motor Control Timer (TSG3)**.

29.2.3.11 TAUD Input Select Function

(1) Overview

The function selects TAUDn input signal to be input as TAUDnTINm/m+1 signal from either TAUD0TINm/m+1 signal or TAUD1TINm/m+1 signal (m is an even number between 0 and 15).

(2) Configuration

The TAUD input select function is realized by using TAUDn input signals and PIC1A in combination.

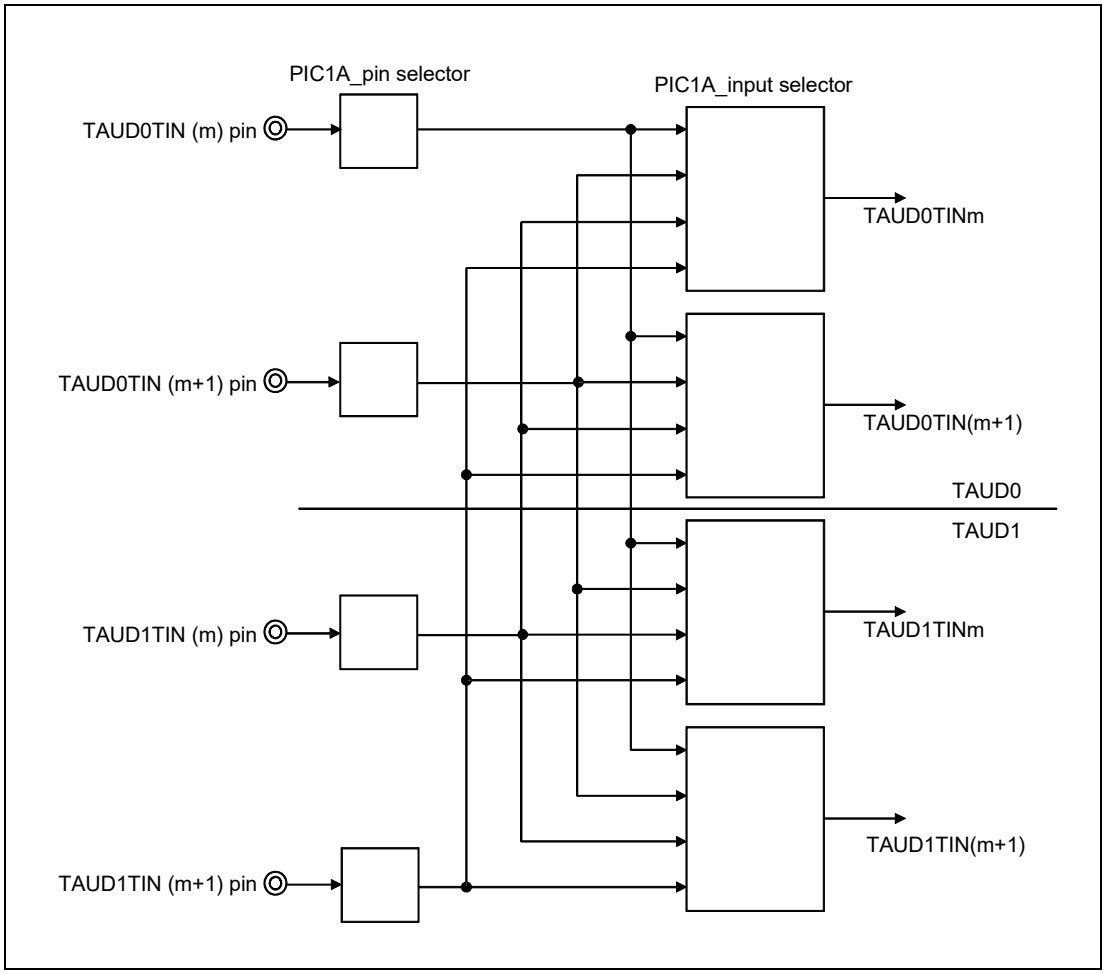

Figure 29.41 Block Diagram of TAUD Input Select Function

(3) Registers

The register settings for PIC1A to use this function are described as follows.

PIC1A_ pin selector

Select TAUDn external channel input pin for output from PIC1A pin selector.

PIC1A_input selector

Select by the registers listed as follows.

PIC1ATAUD0SEL

PIC1ATAUD1SEL

For the details of the register settings, **Section 29.2.2.10, Section 29.2.2.11, Section 29.2.2.18, Section 29.2.2.19, Section 29.2.2.21,** and **Section 29.2.2.24** .

(4) Function

Detail of the function is described using selection of the TAUD0TTIN[1:0] signal as an example.

The following table lists an example of selection of the TAUD0TTIN[1:0] signals. Setting 000000 to PIC1AREG31[11:6], and setting 01 to PIC1ATAUD0SEL[3:2] and PIC1ATAUD0SEL[1:0] allows TAUD0TIN0 and TAUD0TIN1 signals to be input to TAUD0TIN1 and TAUD0TIN0 input pins of the TAUD0 timer. Setting 1 to PIC1ATAUD0SEL[3] and PIC1ATAUD0SEL[1] selects TIN pin signal of TAUD1.

Register Setting PIC1ATAUD0SEL [1:0]	TAUD0TIN0
00_B	TAUD0TIN0 pin
01_B	TAUD0TIN1 pin
10_B	TAUD1TIN0 pin
11_B	TAUD1TIN1 pin

Register Setting PIC1ATAUD0SEL [3:2]	TAUD0TIN1
00_B	TAUD0TIN1 pin
01_B	TAUD0TIN0 pin
10_B	TAUD1TIN1 pin
11_B	TAUD1TIN0 pin

(5) Flow Chart

Set PIC1A before starting the TAUDn timer.

29.2.3.12 Hi-Z Control Function

(1) Overview

The function disconnects three-phase output signal and changes to Hi-Z state.

For the detail of the purpose and operation of the Hi-Z control function, see **Section 26.4.1, Asynchronous Hi-Z Control Function**.

(2) Configuration

The ESOn, ERROROUT, INTTSG30IER, INTTSG31IER, INTADCD0ERR, and INTADCD1ERR signals are masked and OR'ed in PIC1A, and output to TAPAn as the signal for Hi-Z control.

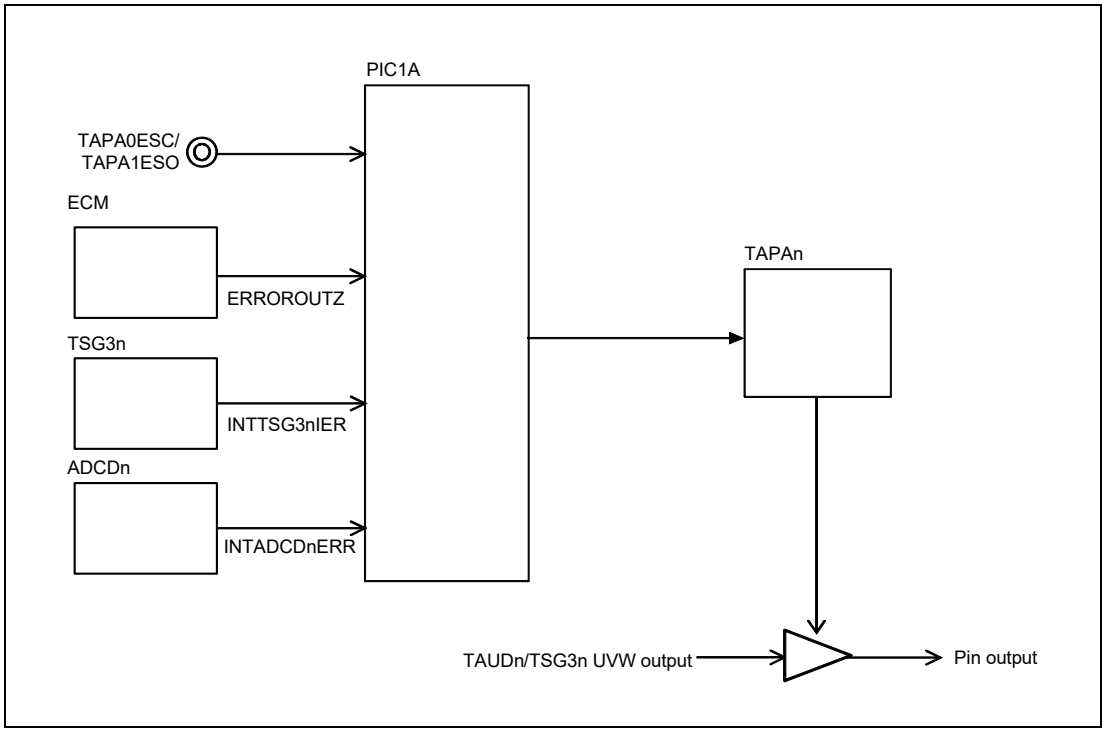

Figure 29.42 Block Diagram of Hi-Z Control

(3) Registers

The block diagram of PIC1A is shown in the following figure.

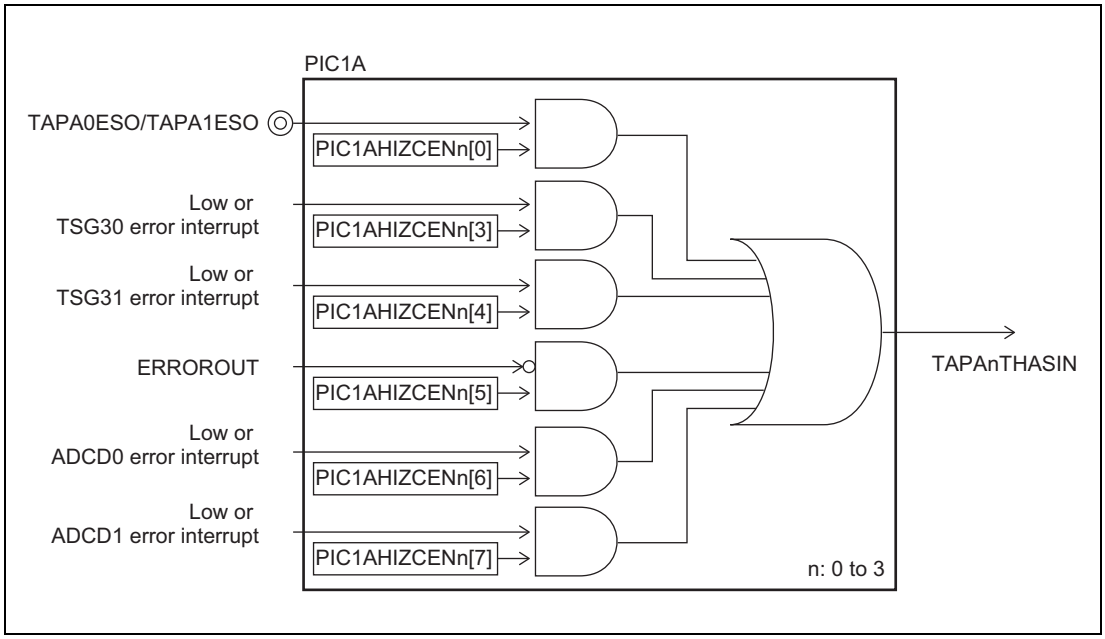

Figure 29.43 Block Diagram of PIC1A

The register settings for PIC1A to use this function are described as follows.

PIC1AHIZCENn[5] = 1 (enabled), 0 (disabled): ERROROUT

PIC1AHIZCENn[0] = 1 (enabled), 0 (disabled): TAPA0ESO or TAPA1ESO

PIC1AHIZCENn[3] = 1 (enabled), 0 (disabled): INTTSG30IER

PIC1AHIZCENn[4] = 1 (enabled), 0 (disabled): INTTSG31IER

PIC1AHIZCENn[6] = 1 (enabled), 0 (disabled): INTADCD0ERR

PIC1AHIZCENn[7] = 1 (enabled), 0 (disabled): INTADCD1ERR

n = 0, 1 is available for TAUD0/TAUD1 and not available for PIC1AHIZCENn[3] and PIC1AHIZCENn[4].

n = 2 is available for TSG30 and not available for PIC1AHIZCEn[4].

n = 3 is available for TSG31 and not available for PIC1AHIZCEn[3].

Table 29.42 Correspondence between the Hi-Z Control Function Input Pins and Control Pins

Input Pin Name	Control Register	TAPA Unit Number	Target Timers for Hi-Z Control
TAPA0ESO	PIC1AHIZCEN0	TAPA0	TAUD0
TAPA1ESO	PIC1AHIZCEN1	TAPA1	TAUD1
TAPA0ESO	PIC1AHIZCEN2	TAPA2	TSG30
TAPA1ESO	PIC1AHIZCEN3	TAPA3	TSG31

(4) Function

The TAPA0ESO/TAPA1ESO pins, ERROROUT, INTTSG30IER, INTTSG31IER, INTADCD0ERR, and INTADCD1ERR for Hi-Z control are masked and OR'ed in PIC1A, and output to TAPAn. For Hi-Z control by TAPA, see **Section 26.4.1.3, Basic Operation**.

(5) Flow Chart

Set PIC1A before starting Hi-Z control.

For the operation flow of TAPA, see **Section 26.4.1, Asynchronous Hi-Z Control Function**.

29.2.3.13 Timer Output Monitor Function (PWM-Diag)

(1) Overview

With this function, output signals of TAUD0, TAUD1, TSG30, TSG31, OSTM0, and OSTM1 are monitored using TAUD2.

(2) Configuration

Monitoring of output signals of TAUD0, TAUD1, TSG30, TSG31, OSTM0, and OSTM1 is realized using TAUD2 and PIC1A in combination.

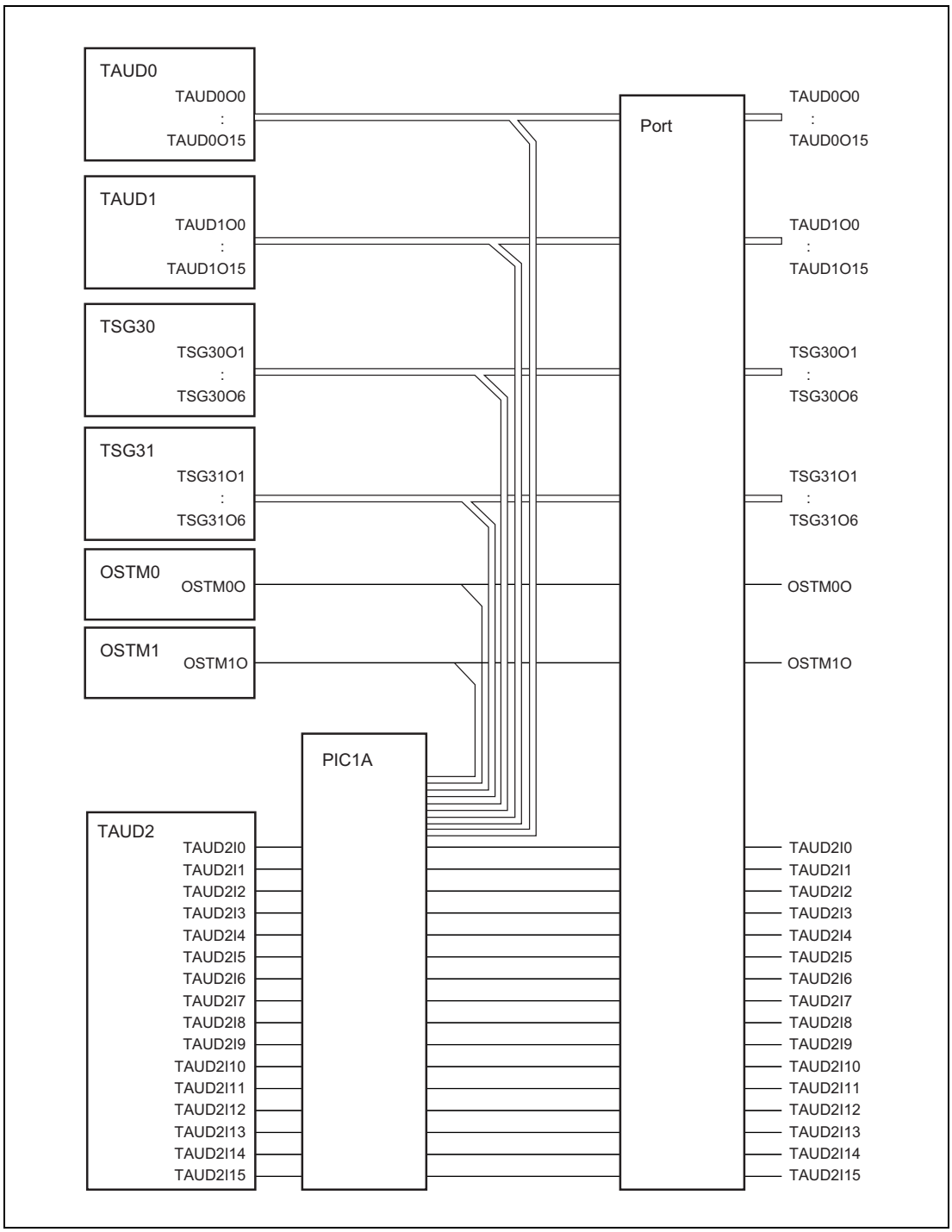

Figure 29.44 Block Diagram of Timer Input Monitor Function

(3) Registers

- The POMONSEL register selects the output signal to be monitored.
- Set the alternative output level loopback function for the port of the output signal to be monitored. For details, see **Section 2.3.4.3 (1) PBDCn/JPBDC0 — Port Bi-Direction Control Register**.

29.2.3.14 Timer Input Monitor Function

(1) Overview

With this function, input signals of TAUJ0 and TAUJ1 are monitored using TAUJ2.

(2) Configuration

Monitoring of output signals of TAUJ0 and TAUJ1 is realized using TAUJ2 and PIC1A in combination.

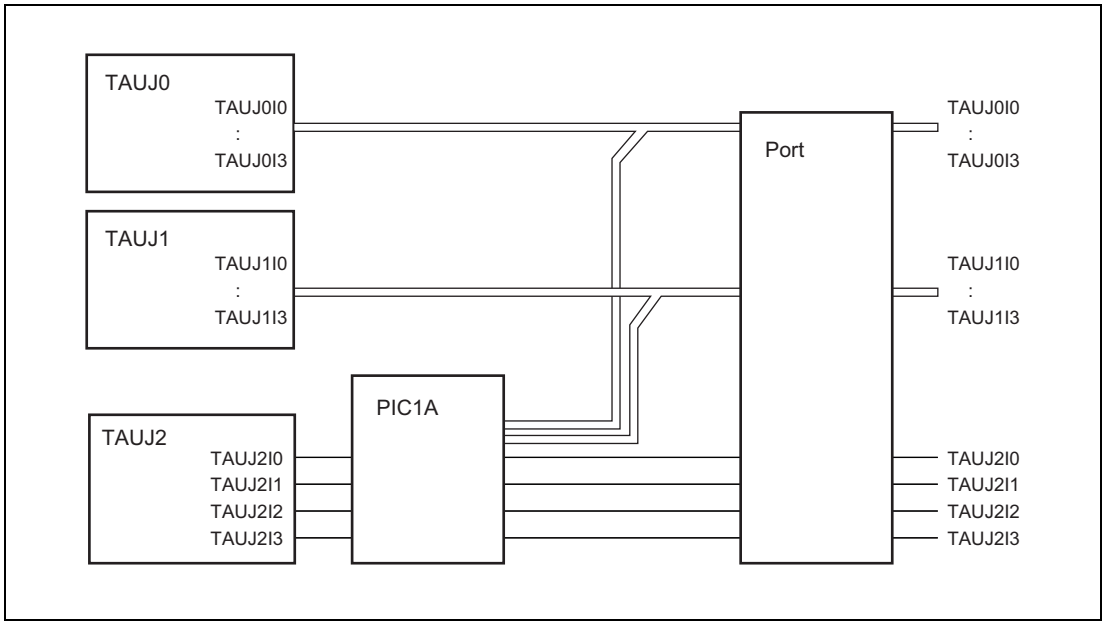

Figure 29.45 Block Diagram of Timer Input Monitor Function

(3) Registers

The PIMONSEL register selects the input signals to be monitored.

29.2.3.15 TSG3 Synchronous Clear Function

(1) Overview

This function allows synchronous starting and clearing of TAUD0, TSG30 and TSG31.

(2) Configuration

The interrupt signals from TAUD0 channels 14 and 15 are used as synchronous start triggers to initiate synchronous starting or clearing of TSG30 and TSG31.

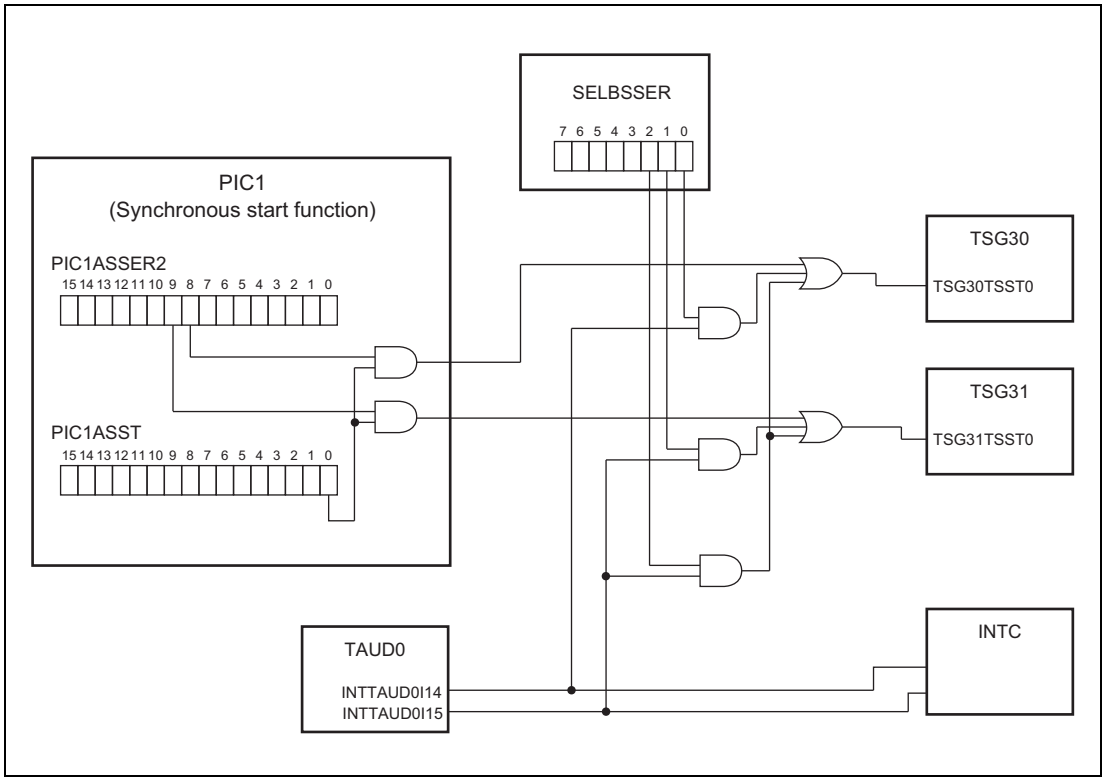

Figure 29.46 Block Diagram of TSG3 Synchronous Clear Function

29.3 Peripheral Interconnection — 2 (PIC2B)

29.3.1 Overview

29.3.1.1 Functional Overview

The peripheral interconnection-2 (PIC2B) allows ADCD hardware trigger signal to be generated using the internal and external trigger signals output from individual IPs.

29.3.2 Registers

29.3.2.1 List of Registers

PIC2B registers are listed in the following table.

Table 29.43 List of Registers

Register Name	Symbol	Address
A/D converter 0 trigger select control register 0	PIC2BADCD0TSEL0	<PIC2B_base> + 00_H
A/D converter 0 trigger select control register 1	PIC2BADCD0TSEL1	<PIC2B_base> + 04_H
A/D converter 0 trigger select control register 2	PIC2BADCD0TSEL2	<PIC2B_base> + 08_H
A/D converter 0 trigger select control register 3	PIC2BADCD0TSEL3	<PIC2B_base> + $0C_H$
A/D converter 0 trigger select control register 4	PIC2BADCD0TSEL4	<PIC2B_base> + 10_H
A/D converter 0 trigger edge select control register	PIC2BADCD0EDGSEL	<PIC2B_base> + $1C_H$
A/D converter 1 trigger select control register 0	PIC2BADCD1TSEL0	<PIC2B_base> + 20_H
A/D converter 1 trigger select control register 1	PIC2BADCD1TSEL1	<PIC2B_base> + 24_H
A/D converter 1 trigger select control register 2	PIC2BADCD1TSEL2	<PIC2B_base> + 28_H
A/D converter 1 trigger select control register 3	PIC2BADCD1TSEL3	<PIC2B_base> + $2C_H$
A/D converter 1 trigger select control register 4	PIC2BADCD1TSEL4	<PIC2B_base> + 30_H
A/D converter 1 trigger edge select control register	PIC2BADCD1EDGSEL	<PIC2B_base> + $3C_H$
Common to ADCD0, 1		
A/D converter trigger output control register 400	PIC2BADTEN400	<PIC2B_base> + 40_H
A/D converter trigger output control register 401	PIC2BADTEN401	<PIC2B_base> + 44_H
A/D converter trigger output control register 402	PIC2BADTEN402	<PIC2B_base> + 48_H
A/D converter trigger output control register 403	PIC2BADTEN403	<PIC2B_base> + $4C_H$
A/D converter trigger output control register 404	PIC2BADTEN404	<PIC2B_base> + 50_H
A/D converter trigger output control register 410	PIC2BADTEN410	<PIC2B_base> + 60_H
A/D converter trigger output control register 411	PIC2BADTEN411	<PIC2B_base> + 64_H
A/D converter trigger output control register 412	PIC2BADTEN412	<PIC2B_base> + 68_H
A/D converter trigger output control register 413	PIC2BADTEN413	<PIC2B_base> + $6C_H$
A/D converter trigger output control register 414	PIC2BADTEN414	<PIC2B_base> + 70_H
A/D converter synchronized start trigger register	ADSYNCTRG	FFF2 3100_H

29.3.2.2 PIC2BADCDnTSELx — A/D Converter n Trigger Select Control Register x

The PIC2BADCDnTSELx register selects triggers for ADCDn scan group x (n = 0, 1; x = 0 to 4).

Access: This register can be read/written in 32-bit units.

Address: Base= FFDD 1000_H
Base + 00_H (n = 0, x = 0), Base + 04_H (n = 0, x =1), Base + 08_H (n = 0, x = 2),
Base + $0C_H$ (n = 0, x = 3), Base + 10_H (n = 0, x = 4),
Base + 20_H (n = 1, x = 0), Base + 24_H (n = 1, x = 1), Base + 28_H (n = 1, x =2),
Base + $2C_H$ (n =1, x = 3), Base + 30_H (n = 1, x = 4)

Value after reset: $0000\ 0000_H$

Bit	31	30	29	28	27	26	25	24	23	22	21	20	19	18	17	16
	—	—	ADCDn TSELx 29	ADCDn TSELx 28	ADCDn TSELx 27	ADCDn TSELx 26	ADCDn TSELx 25	ADCDn TSELx 24	—	—	ADCDn TSELx 21	ADCDn TSELx 20	ADCDn TSELx 19	ADCDn TSELx 18	ADCDn TSELx 17	ADCDn TSELx 16
Value after reset	0	0	0	0	0	0	0	0	0	0	0	0	0	0	0	0
R/W	R	R	R/W	R/W	R/W	R/W	R/W	R/W	R	R	R/W	R/W	R/W	R/W	R/W	R/W

Bit	15	14	13	12	11	10	9	8	7	6	5	4	3	2	1	0
	—	—	—	—	—	—	—	ADCDn TSELx 08	ADCDn TSELx 07	ADCDn TSELx 06	ADCDn TSELx 05	ADCDn TSELx 04	ADCDn TSELx 03	ADCDn TSELx 02	ADCDn TSELx 01	ADCDn TSELx 00
Value after reset	0	0	0	0	0	0	0	0	0	0	0	0	0	0	0	0
R/W	R	R	R	R	R	R	R	R/W	R/W	R/W	R/W	R/W	R/W	R/W	R/W	R/W

Table 29.44 PIC2BADCDnTSELx Register Contents (1/2)

Bit Position	Bit Name	Function
31, 30	Reserved	When read, the value after reset is read. When writing, write the value after reset.
29	ADCDn TSELx29	Selects INTTSG31I12 interrupt of TSG31 as the trigger source for ADCDn SGx. 0: INTTSG31I12 is not selected. 1: INTTSG31I12 is selected.
28	ADCDn TSELx28	Selects INTTSG31I11 interrupt of TSG31 as the trigger source for ADCDn SGx. 0: INTTSG31I11 is not selected. 1: INTTSG31I11 is selected.
27	ADCDn TSELx27	Selects INTTSG31I8 interrupt of TSG31 as the trigger source for ADCDn SGx. 0: INTTSG31I8 is not selected. 1: INTTSG31I8 is selected.
26	ADCDn TSELx26	Selects INTTSG31I7 interrupt of TSG31 as the trigger source for ADCDn SGx. 0: INTTSG31I7 is not selected. 1: INTTSG31I7 is selected.
25	ADCDn TSELx25	Selects INTTSG31I4 interrupt of TSG31 as the trigger source for ADCDn SGx. 0: INTTSG31I4 is not selected. 1: INTTSG31I4 is selected.
24	ADCDn TSELx24	Selects INTTSG31I3 interrupt of TSG31 as the trigger source for ADCDn SGx. 0: INTTSG31I3 is not selected. 1: INTTSG31I3 is selected.
23, 22	Reserved	When read, the value after reset is read. When writing, write the value after reset.
21	ADCDn TSELx21	Selects INTTSG30I12 interrupt of TSG30 as the trigger source for ADCDn SGx. 0: INTTSG30I12 is not selected. 1: INTTSG30I12 is selected.
20	ADCDn TSELx20	Selects INTTSG30I11 interrupt of TSG30 as the trigger source for ADCDn SGx. 0: INTTSG30I11 is not selected. 1: INTTSG30I11 is selected.
19	ADCDn TSELx19	Selects INTTSG30I8 interrupt of TSG30 as the trigger source for ADCDn SGx. 0: INTTSG30I8 is not selected. 1: INTTSG30I8 is selected.

Table 29.44 PIC2BADCDnTSELx Register Contents (2/2)

Bit Position	Bit Name	Function
18	ADCDn TSELx18	Selects INTTSG30I7 interrupt of TSG30 as the trigger source for ADCDn SGx. 0: INTTSG30I7 is not selected. 1: INTTSG30I7 is selected.
17	ADCDn TSELx17	Selects INTTSG30I4 interrupt of TSG30 as the trigger source for ADCDn SGx. 0: INTTSG30I4 is not selected. 1: INTTSG30I4 is selected.
16	ADCDn TSELx16	Selects INTTSG30I3 interrupt of TSG30 as the trigger source for ADCDn SGx. 0: INTTSG30I3 is not selected. 1: INTTSG30I3 is selected.
15 to 9	Reserved	When read, the value after reset is read. When writing, write the value after reset.
8	ADCDn TSELx08	Selects ADTRGn as the trigger source for ADCDn SGx. 0: ADTRGn is not selected. 1: ADTRGn is selected.
7	ADCDn TSELx07	Selects the TSG3nADTRG1 signal of TSG31 as the trigger source for ADCDn SGx. 0: TSG3nADTRG1 is not selected. 1: TSG3nADTRG1 is selected.
6	ADCDn TSELx06	Selects the TSG3nADTRG0 signal of TSG31 as the trigger source for ADCDn SGx. 0: TSG3nADTRG0 is not selected. 1: TSG3nADTRG0 is selected.
5	ADCDn TSELx05	Selects the TSG3nADTRG1 signal of TSG30 as the trigger source for ADCDn SGx. 0: TSG3nADTRG1 is not selected. 1: TSG3nADTRG1 is selected.
4	ADCDn TSELx04	Selects the TSG3nADTRG0 signal of TSG30 as the trigger source for ADCDn SGx. 0: TSG3nADTRG0 is not selected. 1: TSG3nADTRG0 is selected.
3	ADCDn TSELx03	Selects the INTENCA1I1 interrupt signal of ENCA1 as the trigger source for ADCDn SGx. 0: INTENCA1I1 is not selected. 1: INTENCA1I1 is selected.
2	ADCDn TSELx02	Selects the INTENCA0I1 interrupt signal of ENCA1 as the trigger source for ADCDn SGx. 0: INTENCA0I1 is not selected. 1: INTENCA0I1 is selected.
1	ADCDn TSELx01	Selects the TAUD1 interrupt signal selected by the PIC2BADTEN41x register as the trigger source for ADCDn SGx. 0: TAUD1 interrupt is not selected. 1: TAUD1 interrupt is selected.
0	ADCDn TSELx00	Selects the TAUD0 interrupt signal selected by the PIC2BADTEN40x register as the trigger source for ADCDn SGx. 0: TAUD0 interrupt is not selected. 1: TAUD0 interrupt is selected.

29.3.2.3 PIC2BADCDnEDGSEL — A/D Converter Trigger Edge Control Register

The PIC2BADCDnEDGSEL register selects an effective edge for the one-shot pulse generation circuit which generates an ADCD trigger.

Access: This register can be read/written in 16-bit units.

Address: Base = FFDD 1000_H
Base + $1C_H$ (n = 0), Base + $3C_H$ (n = 1)

Value after reset: 0000_H

Bit	15	14	13	12	11	10	9	8	7	6	5	4	3	2	1	0
	—	—	—	—	—	—	PIC2BADCDnEDGSEL[9:0]									
Value after reset	0	0	0	0	0	0	0	0	0	0	0	0	0	0	0	0
R/W	R	R	R	R	R	R	R/W	R/W	R/W	R/W	R/W	R/W	R/W	R/W	R/W	R/W

Table 29.45 PIC2BADCDnEDGSEL Register Contents

Bit Position	Bit Name	Function
15 to 10	Reserved	When read, the value after reset is read. When writing, write the value after reset.
9, 8	PIC2BADCDnEDGSEL[9:8]	Selects an effective edge of ADCDn scan group 4. 00: Rising edge is selected. 01: Falling edge is selected. 10: Both edges are selected. 11: — (setting prohibited.)
7, 6	PIC2BADCDnEDGSEL[7:6]	Selects an effective edge of ADCDn scan group 3. 00: Rising edge is selected. 01: Falling edge is selected. 10: Both edges are selected. 11: — (setting prohibited.)
5, 4	PIC2BADCDnEDGSEL[5:4]	Selects an effective edge of ADCDn scan group 2. 00: Rising edge is selected. 01: Falling edge is selected. 10: Both edges are selected. 11: — (setting prohibited.)
3, 2	PIC2BADCDnEDGSEL[3:2]	Selects an effective edge of ADCDn scan group 1. 00: Rising edge is selected. 01: Falling edge is selected. 10: Both edges are selected. 11: — (setting prohibited.)
1, 0	PIC2BADCDnEDGSEL[1:0]	Selects an effective edge of ADCDn scan group 0. 00: Rising edge is selected. 01: Falling edge is selected. 10: Both edges are selected. 11: — (setting prohibited.)

29.3.2.4 PIC2BADTEN4nx — A/D Converter Trigger Output Select Control Register

The PIC2BADTEN4nx register enables selecting a trigger source from TAUDn channel m as the ADCD trigger. (n = 0, 1; x = 0 to 4). This register is common to ADCD0 and ADCD1.

Access: This register can be read/written in 16-bit units.

Address: Base = FFDD 1000_H
Base + 40_H (n = 0, x = 0), Base + 44_H (n = 0, x = 1), Base + 48_H (n = 0, x = 2),
Base + $4C_H$ (n = 0, x = 3), Base + 50_H (n = 0, x = 4),
Base + 60_H (n = 1, x = 0), Base + 64_H (n = 1, x = 1), Base + 68_H (n = 1, x = 2),
Base + $6C_H$ (n = 1, x = 3), Base + 70_H (n = 1, x = 4)

Value after reset: 0000_H

Bit	15	14	13	12	11	10	9	8	7	6	5	4	3	2	1	0
	PIC2BADTEN4nx[15:0]															
Value after reset	0	0	0	0	0	0	0	0	0	0	0	0	0	0	0	0
R/W	R/W	R/W	R/W	R/W	R/W	R/W	R/W	R/W	R/W	R/W	R/W	R/W	R/W	R/W	R/W	R/W

Table 29.46 PIC2BADTEN4nx Register Contents

Bit Position	Bit Name	Function
15 to 0	PIC2BADTEN4nxm (m = 0 to15)	Set a trigger source from TAUDn channel m. 0: Trigger source of TAUDn channel m cannot be selected as the ADCD trigger. 1: Trigger source of TAUDn channel m can be selected as the ADCD trigger.

29.3.2.5 ADSYNCTRG — A/D Converter Synchronized Start Trigger Register

The ADSYNCTRG register controls synchronized start trigger for ADCD0 and ADCD1.

Access: This register can be read/written in 8-bit units.

Address: FFF2 3100_H

Value after reset: 00_H

Bit	7	6	5	4	3	2	1	0
	—	—	—	ADSYNCTRG4	ADSYNCTRG3	ADSYNCTRG2	ADSYNCTRG1	ADSYNCTRG0
Value after reset	0	0	0	0	0	0	0	0
R/W	R	R	R	R/W	R/W	R/W	R/W	R/W

Table 29.47 ADSYNCTRG Register Contents

Bit Position	Bit Name	Function
7 to 5	Reserved	When read, the value after reset is read. When writing, write the value after reset.
4	ADSYNCTRG4	Synchronously convert the SG of ADCD1 with the conversion start trigger selected by the individual SG of ADCD0. 0: Synchronization start is disabled. 1: Synchronization start is enabled. The function only applies to normal A/D conversion of ADCD0 and ADCD1.
3	ADSYNCTRG3	
2	ADSYNCTRG2	
1	ADSYNCTRG1	
0	ADSYNCTRG0	

29.3.3 Function

29.3.3.1 ADCD Trigger Select Function

(1) Overview

The function allows generation of ADCD hardware trigger signal for individual scan groups by the signals from each IP. The IPs can be selected from among TAUD0, TAUD1, ENCA0, ENCA1, TSG30, and TSG31.

(2) Configuration

The ADCD trigger select function is realized by using individual IPs and PIC2B in combination. The following figure shows the block diagram of ADCD trigger select function.

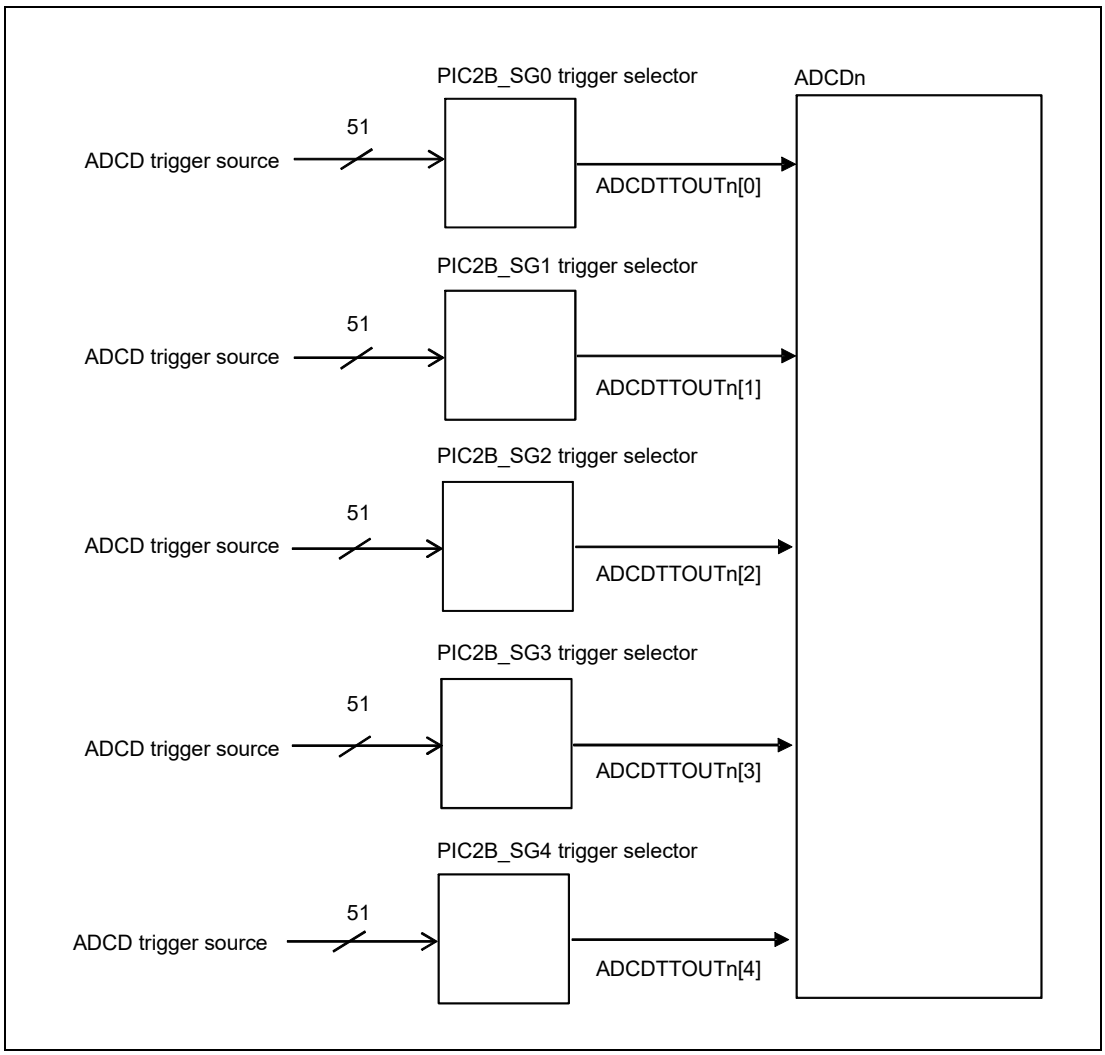

Figure 29.47 Block Diagram of ADCD Trigger Select Function

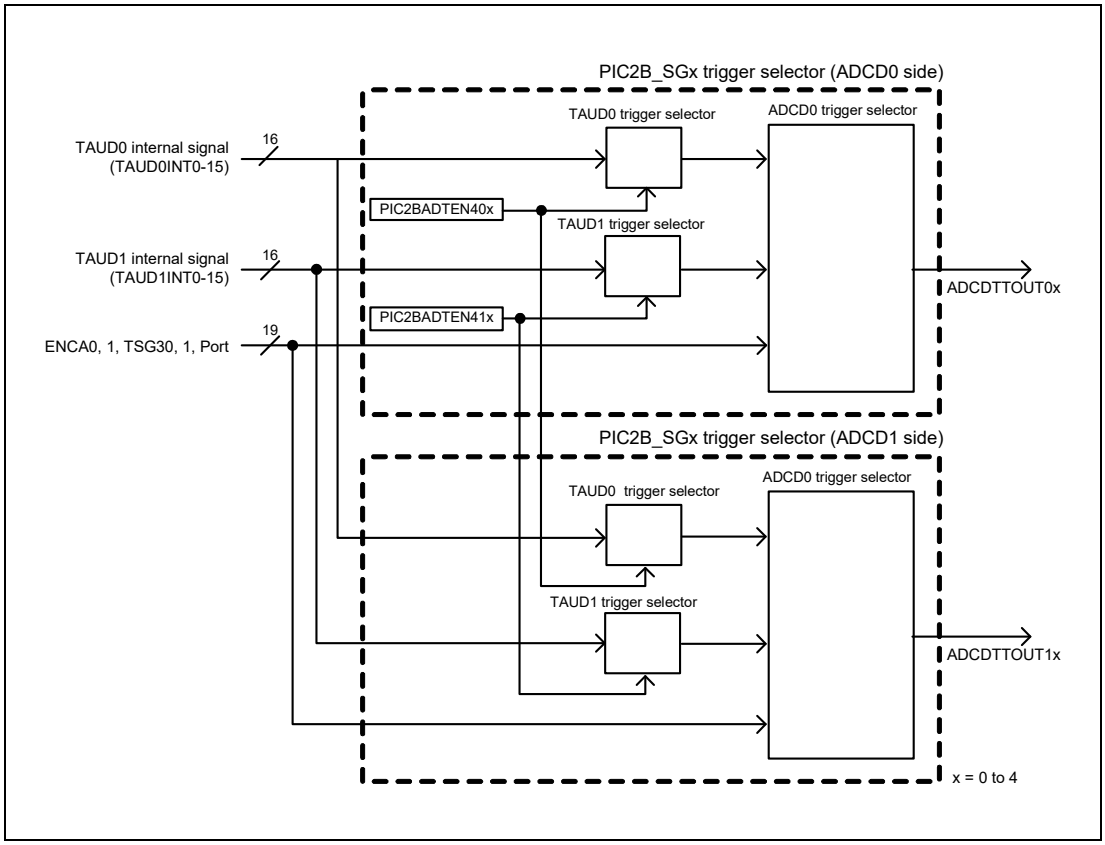

Figure 29.48 Block Diagram of PIC2B_SGx Trigger Selection

(3) Registers

For the settings of the registers used in this function, see **Figure 29.49, Block Diagram of PIC2B**, and from **Section 29.3.2.2** to **Section 29.3.2.4.**

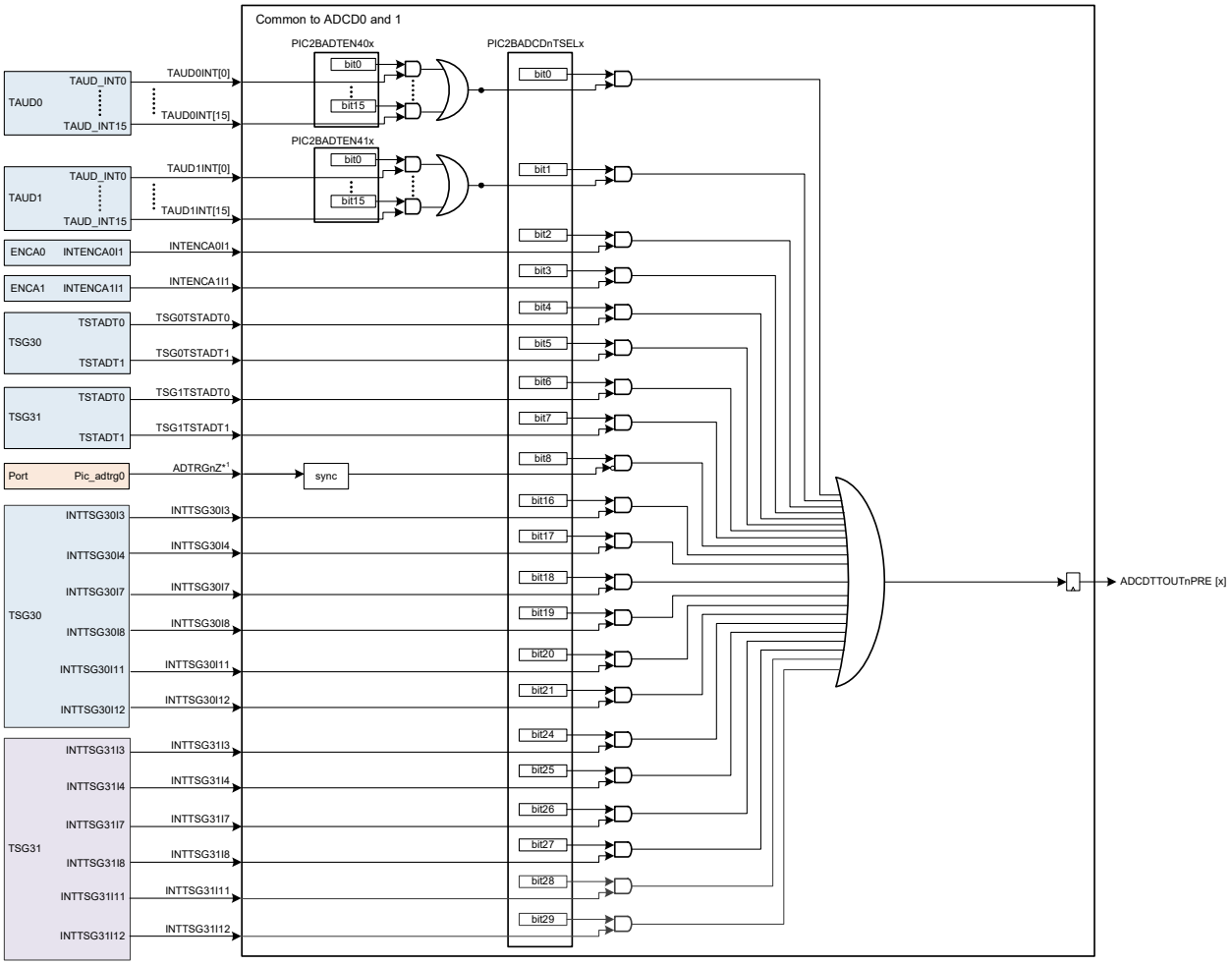

Note 1. For external trigger signal, a delay of maximum two cycles of the clock (12.5ns (80 MHz) @ 1clk) is generated because of the synchronization circuit (Sync) which needs to be considered when selecting an external trigger signal as the ADCD trigger.

Figure 29.49 Block Diagram of PIC2B

(4) Function

AD trigger signal can be selected for individual ADCDn scan groups and output can be selected from rising edge, falling edge, and both edges. The TAUD trigger for the scan group with the same number is shared among ADCD0 and ADCD1.

(5) Flow Chart

Set this function before starting A/D converter.

Section 30 A/D Converter (ADCD)

This section contains a generic description of the A/D converter (ADCD).

The first part of the section describes all RH850/P1x specific properties such as the number of units, register base address, etc. The remainder of the section describes the function of ADCD and registers.

30.1 Features of RH850/P1x ADCD

30.1.1 Number of Units

This microcontroller has the following number of units of ADCD.

Table 30.1 Units

Products	RH850/P1x
Number of units	2
Name	ADCDn (n = 0, 1)

Table 30.2 Index

Index	Meaning
n	Throughout this section, the individual ADCD units are identified by the index “n” (n = 0, 1), for example, ADCDnVCRj for the virtual channel register j.
m	Throughout this section, the number of each ADCD physical channel is indicated by the index “m”. For example, the physical channels of ADCDn are AN0m (m = 0 to 11) and AN1m (m = 0 to 12, including the temperature sensor dedicated channel. See **Table 30.7** for physical channels for each device.
j	Throughout this section, the number of data registers and virtual channels are identified by the index “j” (j = 0 to 23), for example, ADCDnDRj for the data register j.
k	Throughout this section, the T&H channel number is indicated by the letter “k” (k = 0 to 5 for ADCD0; k = 0 to 3 for ADCD1).
x	Throughout this section, the scan group is indicated by the letter “x” (x = 0 to 4).
y	Throughout this section, the number of A/D timers are indicated by the letter “y” (y = 3, 4).
z	Throughout this section, A/D conversion monitor virtual channel pointer is indicated by the index “z” (z = 0 to 4).

30.1.2 Register Base Address

ADCD base addresses are listed in the following table.

ADCD register addresses are given as offsets from the individual base address.

Table 30.3 Register Base Address

Base Address Name	Base Address
<ADCD0_base>	FFF2 0000_H
<ADCD1_base>	FFF2 1000_H

30.1.3 Clock Supply

Clock supply by and to ADCD is listed in the following table.

Table 30.4 Clock Supply

Unit Name	Unit Clock Name	Supply Clock Name
ADCDn	PCLK	Low-speed peripheral clock CLK_LSB
	ADCD clock	ADCD clock CLK_ADC

30.1.4 Interrupts and DMA

ADCD interrupt requests are listed in the following table.

Table 30.5 Interrupt Requests

Unit Interrupt Name	Description	Interrupt Code	DMA Trigger Code	DTS Trigger Code
ADCD0				
INTADCD0I0	ADCD0 scan group 0 end interrupt	77	55	55
INTADCD0I1	ADCD0 scan group 1 end interrupt	78	56	56
INTADCD0I2	ADCD0 scan group 2 end interrupt	79	57	57
INTADCD0I3	ADCD0 scan group 3 end interrupt	80	58	58
INTADCD0I4	ADCD0 scan group 4 end interrupt	81	59	59
INTADCD0ERR	ADCD0 AD error interrupt	76	—	—
INTADCD0MPX	ADCD0 MPX interrupt request	294	93	93
ADCD1				
INTADCD1I0	ADCD1 scan group 0 end interrupt	178	60	60
INTADCD1I1	ADCD1 scan group 1 end interrupt	179	61	61
INTADCD1I2	ADCD1 scan group 2 end interrupt	180	62	62
INTADCD1I3	ADCD1 scan group 3 end interrupt	181	63	63
INTADCD1I4	ADCD1 scan group 4 end interrupt	182	64	64
INTADCD1ERR	ADCD1 AD error interrupt	177	—	—
INTADCD1MPX	ADCD1 MPX interrupt request	295	94	94

Note: ADC parity error interrupt is connected to ECM (error control module).

30.1.5 Reset Resources

ADCD reset sources are listed in the following table. ADCD is initialized by these reset sources.

Table 30.6 Reset Sources

Unit Name	Reset Source
ADCDn	Reset Controller SYSRES

30.1.6 External Input/Output Signals

External input/output signals of ADCD are listed in the following table.

Table 30.7 External Input/Output Signals (1/2)

Unit Signal Name	Outline	Alternative Port Pin Signal	Supported Product	
			RH850/P1x	RH850/P1x
			100-pin	144-pin
AVcc0	Power supply pin for the input analog part	A0VCC	√	√
AVss0	Ground pin for the input analog part	A0VSS	√	√
AVcc1	Power supply pin for the input analog part	A1VCC	√	√
AVss1	Ground pin for the input analog part	A1VSS	√	√
AVREFH0	Reference voltage pin for the input analog part	A0VREFH	√	√
AVREFH1	Reference voltage pin for the input analog part	A1VREFH	√	√
AN000	12-bit resolution analog input pin (for T&H)	ADCD0I0	√	√
AN001	12-bit resolution analog input pin (for T&H)	ADCD0I1	√	√
AN002	12-bit resolution analog input pin (for T&H)	ADCD0I2	√	√
AN003	12-bit resolution analog input pin (for T&H)	ADCD0I3	√	√
AN004	12-bit resolution analog input pin (for T&H)	ADCD0I4	√	√
AN005	12-bit resolution analog input pin (for T&H)	ADCD0I5	√	√
AN006	12-bit resolution analog input pin (for MPX)	ADCD0I6	√	√
AN007	12-bit resolution analog input pin	ADCD0I7	√	√
AN008	12-bit resolution analog input pin	ADCD0I8	√	√
AN009	12-bit resolution analog input pin	ADCD0I9	—	√
AN010	12-bit resolution analog input pin	ADCD0I10	—	√
AN011	12-bit resolution analog input pin	ADCD0I11	—	√
AN100	12-bit resolution analog input pin (for T&H and MPX)	ADCD1I0	√	√
AN101	12-bit resolution analog input pin (for T&H)	ADCD1I1	√	√
AN102	12-bit resolution analog input pin (for T&H)	ADCD1I2	√	√
AN103	12-bit resolution analog input pin (for T&H)	ADCD1I3	√	√
AN104	12-bit resolution analog input pin	ADCD1I4	√	√
AN105	12-bit resolution analog input pin	ADCD1I5	√	√
AN106	12-bit resolution analog input pin	ADCD1I6	√	√
AN107	12-bit resolution analog input pin	ADCD1I7	√	√
AN108	12-bit resolution analog input pin	ADCD1I8	√	√
AN109	12-bit resolution analog input pin	ADCD1I9	√	√
AN110	12-bit resolution analog input pin	ADCD1I10	—	√
AN111	12-bit resolution analog input pin	ADCD1I11	—	√
AN112	Input channel for internal temperature sensor	—	√	√
ADTRG0	External input trigger pin*1	ADCDTRG0	√	√
ADTRG1	External input trigger pin*1	ADCDTRG1	√	√
ADCD0CNV0	A/D converter status monitor pin	ADCD0CNV0	√	√
ADCD0CNV1	A/D converter status monitor pin	ADCD0CNV1	√	√
ADCD0CNV2	A/D converter status monitor pin	ADCD0CNV2	√	√
ADCD0CNV3	A/D converter status monitor pin	ADCD0CNV3	√	√
ADCD0CNV4	A/D converter status monitor pin	ADCD0CNV4	√	√
ADCD1CNV0	A/D converter status monitor pin	ADCD1CNV0	√	√
ADCD1CNV1	A/D converter status monitor pin	ADCD1CNV1	√	√

Table 30.7 External Input/Output Signals (2/2)

Unit Signal Name	Outline	Alternative Port Pin Signal	Supported Product	
			RH850/P1x	RH850/P1x
			100-pin	144-pin
ADCD1CNV2	A/D converter status monitor pin	ADCD1CNV2	√	√
ADCD1CNV3	A/D converter status monitor pin	ADCD1CNV3	√	√
ADCD1CNV4	A/D converter status monitor pin	ADCD1CNV4	√	√

Note 1. A noise filter can be used for the trigger input pins. For details, see **Section Figure 2.6, Example of Port Configuration Flow (in port mode)**.

30.1.7 Analog Channels, and Track and Hold Function

A/D conversion is available for 12 ADCD0 channels and 13 ADCD1 channels (including the temperature sensor dedicated channel), 25 channels in total. For corresponding channel numbers for each product, see **Table 30.7**.

ADCDn has an internal track and hold circuit that enables A/D conversion with simultaneous sampling of the voltages on different channels.

ADCD0 has a track and hold circuit for six channels that enables simultaneous track and hold for up to six channels.

ADCD1 has a track and hold circuit for four channels that enables simultaneous track and hold for up to four channels.

30.1.8 Virtual Channel

Each ADCD has 24 virtual channels. Analog channels for which A/D conversion is to be made and other accompanying information are set for each virtual channel. By sequentially performing the processing for the virtual channels indicated by the start virtual channel pointer and the end virtual channel pointer in each scan group, scans (which can perform A/D conversion for any analog channels in any order) can be executed.

30.2 Overview

30.2.1 Functional Overview

ADCD has the following features.

Advanced A/D converter
Resolution: 12 bits
A/D conversion method: Successive approximation method
A/D conversion time: Selectable as 1.0 µs and 11.3 µs.
(The A/D conversion time is the sum of the sampling time of the sample-and-hold circuits and the time for conversion by successive approximation.)

- Supports five scan groups
  Each ADCD has five scan groups. Scan settings can be made independently for each scan group.
- Two scan modes
  Each ADCD has two scan modes.
  Multicycle scan mode: Specified number of scans are executed. Continuous scan mode: Scans are repeatedly executed without limit.
- Interval function
  The ADCD can start scan groups in any cycle by using the A/D timer equipped in the scan groups 3 and 4. This enables scans with intervals inserted.
- A/D-converted value adding function
  The ADCD performs A/D conversion sequentially twice or four times for a channel, and stores the addition result in the data register. The addition count can be set for each virtual channel.
  The effect of the moving average filter can be gained by using this result. However, this function does not always ensure that A/D conversion accuracy is improved.
- Extended physical channels
  Each ADCD can extend physical channels by using an external analog multiplexer. (Available channels are AN006 and AN100.)
- Data registers
  Data registers corresponding to virtual channels are provided.
- Start trigger for each scan group
  Hardware triggers and software triggers can start processing of each scan group. Only scan groups 3 and 4 can start processing by an A/D timer trigger.
- Asynchronous/synchronous suspend and resume function
  A processing for a scan group can interrupt an ongoing processing for another scan group. The priority is as follows:
  Low High
  SG0 < SG1 < SG2 < SG3 < SG4 (SG: Scan group)

  If a request for a higher-priority SG is present while a lower-priority SG is being processed, the lower-priority SG is suspended after the ongoing virtual channel processing is stopped (synchronous suspend) or after the ongoing virtual channel processing is immediately stopped (asynchronous suspend), and then the processing for the higher-priority SG is performed. After the processing for the higher-priority SG is completed, the suspended virtual channel processing of the lower-priority SG resumes (synchronous suspend is available only when T&H function is not used.)

Also, you can set as follows: when a higher-priority SG interrupts an SG0 processing, asynchronous suspend occurs, but when a higher-priority SG interrupts a lower-priority SG other than SG0, synchronous suspend occurs (only when T&H function is not used).

- Supports scan end interrupt and DMA transfer
  Each scan group can generate an interrupt request to the INTC and activate the DMAC each time a processing for the virtual channel indicated by the end virtual channel pointer ends or a virtual channel ends.
- An analog conversion voltage settable
  The A0VREFH pin and the A1VREFH pin can be used to set the voltage range for analog conversion.
- A variety of safety functions
  The ADCD is equipped with various safety functions, including A/D conversion circuit self-diagnostic function, pin-level self-diagnostic function, wiring-break detection, ID error check, upper-limit/lower-limit check for data registers, parity check for data registers, overwrite check for data registers, read and clear function for data registers.

30.2.2 Block Diagram

Figure 30.1 and **Figure 30.2** show the block diagrams of ADCD.

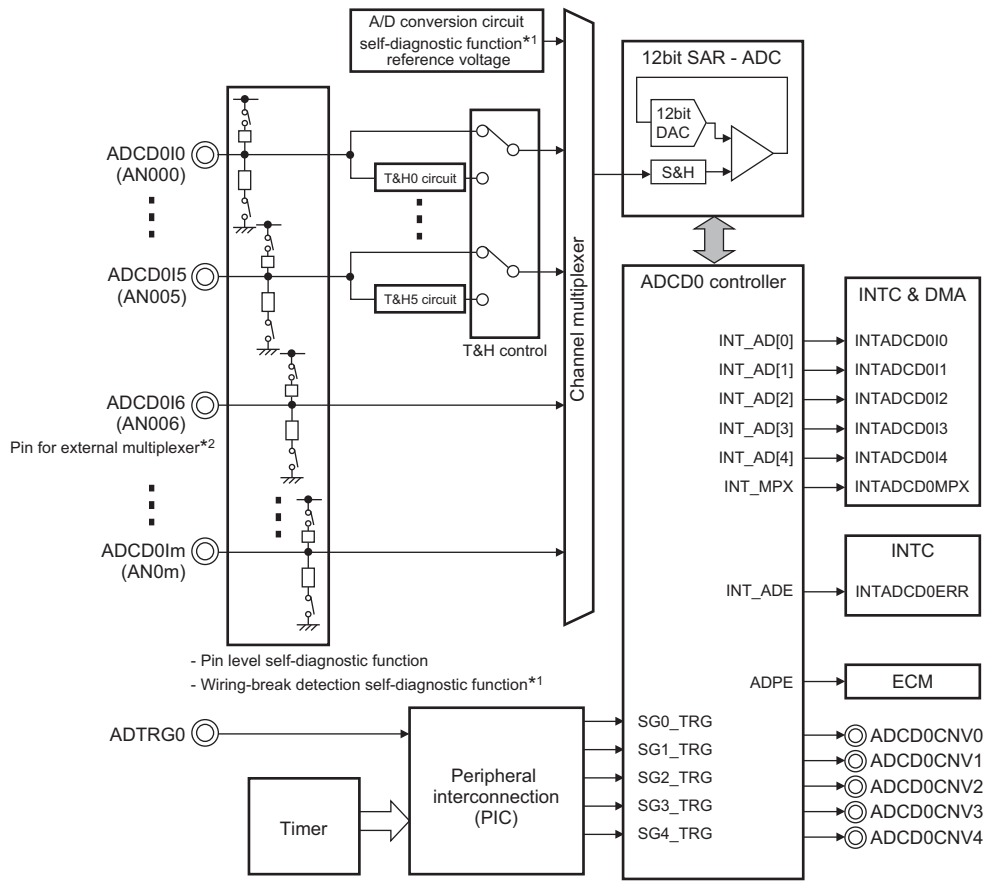

Note 1. For details, see **Section 30.4.4, Self-Diagnostic Function**.

Note 2. ADCD0I6 is for the external multiplexer. See **Section 30.4.1.5, Example of Using an External Analog Multiplexer (Port Output)**.

Figure 30.1 ADCD0 Block Diagram

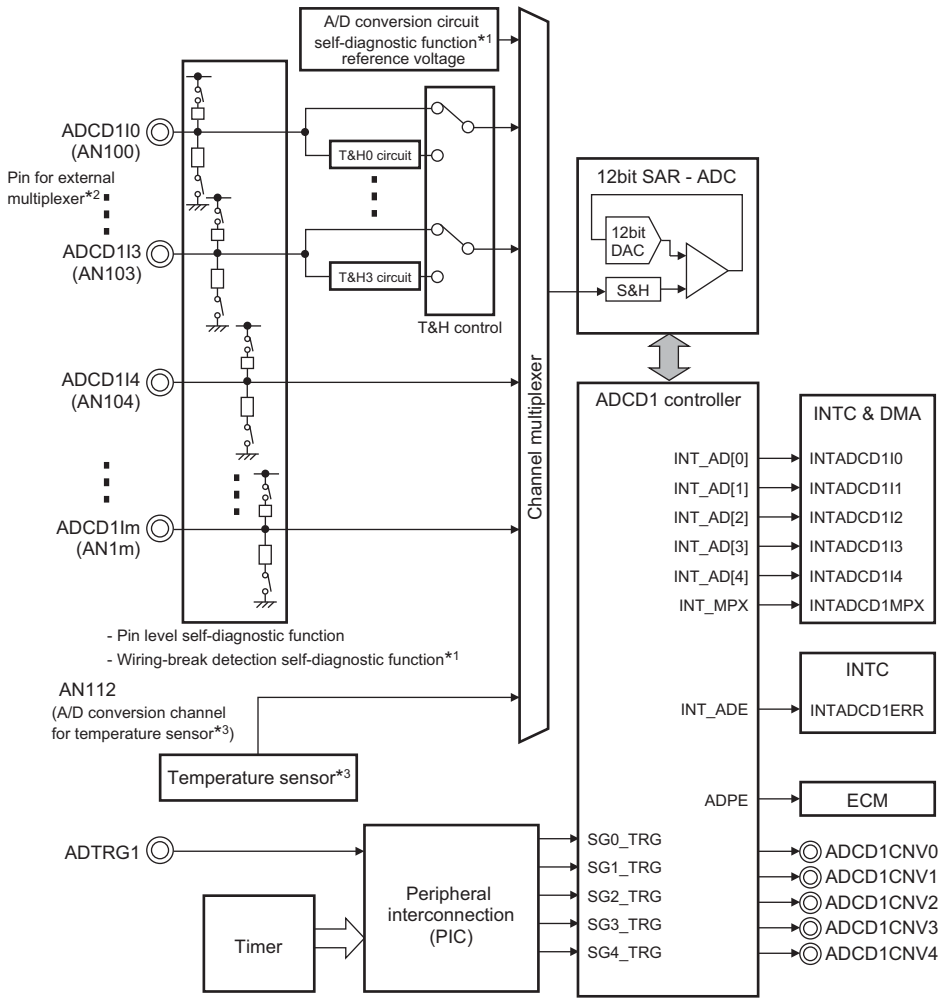

Note 1. For details, see **Section 30.4.4, Self-Diagnostic Function**.

Note 2. ADCD1I0 is for the external multiplexer. See **Section 30.4.1.5, Example of Using an External Analog Multiplexer (Port Output)**.

Note 3. AN112 is for the A/D conversion channel for temperature sensor. For details, see **Section 11, Temperature Sensor**.

Figure 30.2 ADCD1 Block Diagram

30.2.3 Scan Group (SG)

A scan group is a group of multiple virtual channels.

ADCD has 5 scan groups and the order of priority for A/D conversion is as follows: (low) SG0 < SG1 < SG2 < SG3 < SG4 (high).

SGx can group serial virtual channels. Grouping is set up by using a start pointer (ADCDnSGVCSPx register) and an end pointer (ADCDnSGVCEPx register). Disable the A/D conversion trigger input for any unused scan groups.

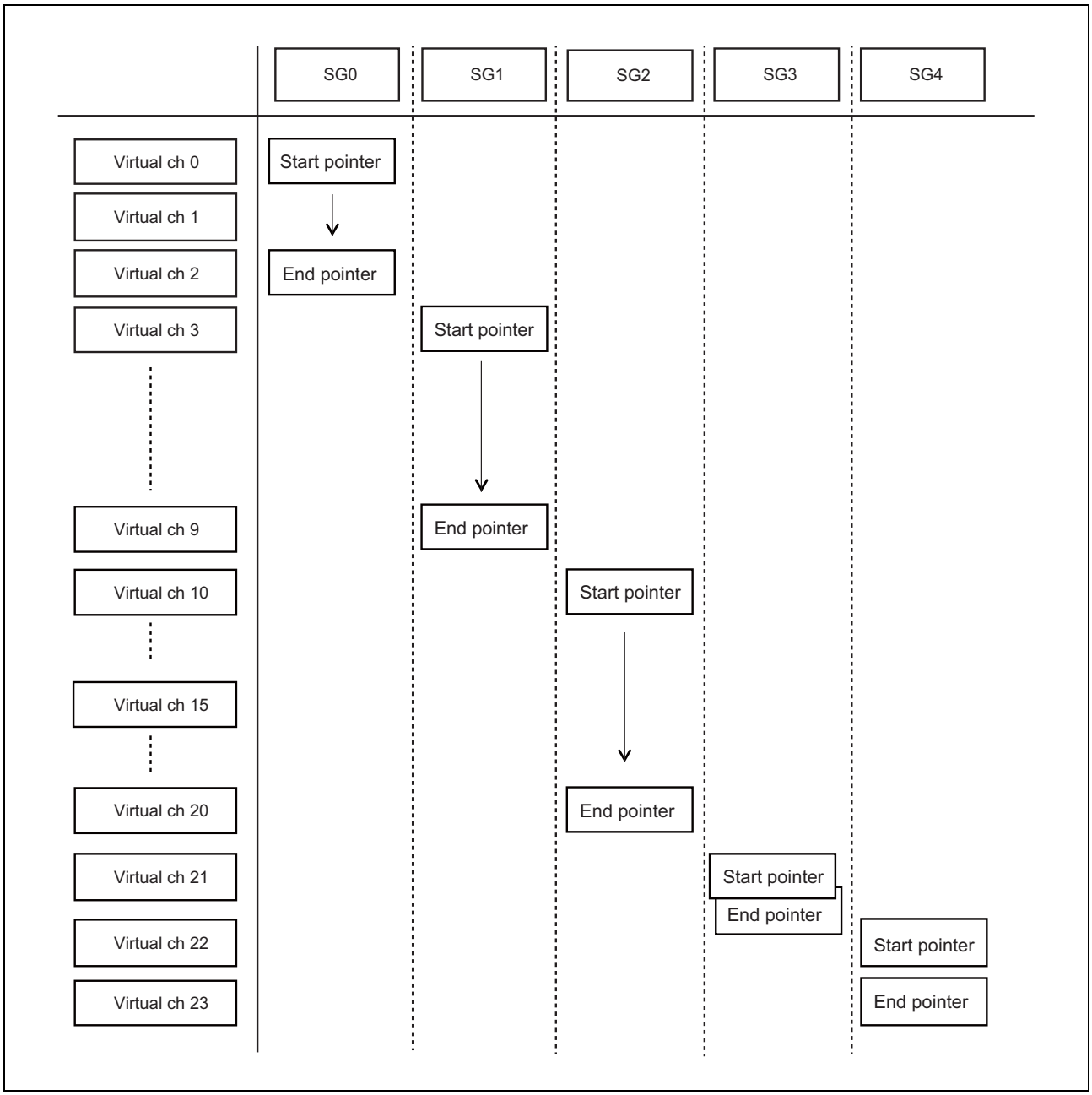

Figure 30.3 Example of SG Assignment

30.3 Registers

30.3.1 List of Registers

ADCD registers are listed in the following table.

Table 30.8 List of Registers (1/2)

Register Name	Symbol	Address
ADC common registers		
AD synchronization start control register	ADCD0ADSYNSTCR	<ADCD0_base> + 300_H
AD timer synchronization start control register	ADCD0ADTSYNSTCR	<ADCD0_base> + 304_H
ADC specific registers (virtual channel)		
Virtual channel register j	ADCDnVCRj	<ADCDn_base> + j × 4_H
Data register j (j = only even numbers)	ADCDnDRj	<ADCDn_base> + 100_H + j × 2_H
Data supplementary information register j	ADCDnDIRj	<ADCDn_base> + 200_H + j × 4_H
ADC specific registers (control)		
A/D conversion time control register	ADCDnSMPCR	<ADCDn_base> + 340_H
AD halt register	ADCDnADHALTR	<ADCDn_base> + 380_H
AD control register 1	ADCDnADCR1	<ADCDn_base> + 384_H
MPX current control register	ADCDnMPXCURCR	<ADCDn_base> + 388_H
MPX current register	ADCDnMPXCURR	<ADCDn_base> + $38C_H$
MPX optional wait register	ADCDnMPXOWR	<ADCDn_base> + 390_H
AD control register 2	ADCDnADCR2	<ADCDn_base> + 398_H
A/D conversion monitor virtual channel pointer 0	ADCDnADENDP0	<ADCDn_base> + $3A0_H$
A/D conversion monitor virtual channel pointer 1	ADCDnADENDP1	<ADCDn_base> + $3A4_H$
A/D conversion monitor virtual channel pointer 2	ADCDnADENDP2	<ADCDn_base> + $3A8_H$
A/D conversion monitor virtual channel pointer 3	ADCDnADENDP3	<ADCDn_base> + $3AC_H$
A/D conversion monitor virtual channel pointer 4	ADCDnADENDP4	<ADCDn_base> + $3B0_H$
T&H sampling start control register	ADCDnTHSMPSTCR	<ADCDn_base> + 400_H
T&H stop control register	ADCDnTHSTPCR	<ADCDn_base> + 404_H
T&H control register	ADCDnTHCR	<ADCDn_base> + 408_H
T&H group A hold start control register	ADCDnTHAHLDSTCR	<ADCDn_base> + 410_H
T&H group B hold start control register	ADCDnTHBHLDSTCR	<ADCDn_base> + 414_H
T&H group A control register	ADCDnTHACR	<ADCDn_base> + 420_H
T&H group B control register	ADCDnTHBCR	<ADCDn_base> + 424_H
T&H enable register	ADCDnTHER	<ADCDn_base> + 430_H
T&H group select register	ADCDnTHGSR	<ADCDn_base> + 434_H
ADC specific registers (safety-related)		
Safety control register	ADCDnSFTCR	<ADCDn_base> + $3C0_H$
Pin level self-diagnostic control register	ADCDnTDCR	<ADCDn_base> + $3C4_H$
Wiring-break detection control register	ADCDnODCR	<ADCDn_base> + $3C8_H$
Wiring-break detection pin setting register 0	ADOPDIG0	FFF2 3000_H
Wiring-break detection pin setting register 1	ADOPDIG1	FFF2 3040_H
Upper-limit/lower-limit table register 0	ADCDnULLMTBR0	<ADCDn_base> + $3CC_H$
Upper-limit/lower-limit table register 1	ADCDnULLMTBR1	<ADCDn_base> + $3D0_H$
Upper-limit/lower-limit table register 2	ADCDnULLMTBR2	<ADCDn_base> + $3D4_H$
Error clear register	ADCDnECR	<ADCDn_base> + $3D8_H$
Upper-limit/lower-limit error register	ADCDnULER	<ADCDn_base> + $3DC_H$
Overwrite error register	ADCDnOWER	<ADCDn_base> + $3E0_H$
Parity error register	ADCDnPER	<ADCDn_base> + $3E4_H$

Table 30.8 List of Registers (2/2)

Register Name	Symbol	Address
ID error register	ADCDnIDER	<ADCDn_base> + $3E8_H$
Scan group specific registers		
Scan group x start control register 0	ADCDnSGSTCR0	<ADCDn_base> + 480_H
Scan group x start control register 1	ADCDnSGSTCR1	<ADCDn_base> + 500_H
Scan group x start control register 2	ADCDnSGSTCR2	<ADCDn_base> + 580_H
Scan group x start control register 3	ADCDnSGSTCR3	<ADCDn_base> + 600_H
Scan group x start control register 4	ADCDnSGSTCR4	<ADCDn_base> + 680_H
AD timer y start control register 3	ADCDnADTSTCR3	<ADCDn_base> + 608_H
AD timer y start control register 4	ADCDnADTSTCR4	<ADCDn_base> + 688_H
AD timer y end control register 3	ADCDnADTENDCR3	<ADCDn_base> + $60C_H$
AD timer y end control register 4	ADCDnADTENDCR4	<ADCDn_base> + $68C_H$
Scan group x control register 0	ADCDnSGCR0	<ADCDn_base> + 490_H
Scan group x control register 1	ADCDnSGCR1	<ADCDn_base> + 510_H
Scan group x control register 2	ADCDnSGCR2	<ADCDn_base> + 590_H
Scan group x control register 3	ADCDnSGCR3	<ADCDn_base> + 610_H
Scan group x control register 4	ADCDnSGCR4	<ADCDn_base> + 690_H
Scan group x start virtual channel pointer 0	ADCDnSGVCSP0	<ADCDn_base> + 494_H
Scan group x start virtual channel pointer 1	ADCDnSGVCSP1	<ADCDn_base> + 514_H
Scan group x start virtual channel pointer 2	ADCDnSGVCSP2	<ADCDn_base> + 594_H
Scan group x start virtual channel pointer 3	ADCDnSGVCSP3	<ADCDn_base> + 614_H
Scan group x start virtual channel pointer 4	ADCDnSGVCSP4	<ADCDn_base> + 694_H
Scan group x end virtual channel pointer 0	ADCDnSGVCEP0	<ADCDn_base> + 498_H
Scan group x end virtual channel pointer 1	ADCDnSGVCEP1	<ADCDn_base> + 518_H
Scan group x end virtual channel pointer 2	ADCDnSGVCEP2	<ADCDn_base> + 598_H
Scan group x end virtual channel pointer 3	ADCDnSGVCEP3	<ADCDn_base> + 618_H
Scan group x end virtual channel pointer 4	ADCDnSGVCEP4	<ADCDn_base> + 698_H
Scan group x multicycle register 0	ADCDnSGMCYCR0	<ADCDn_base> + $49C_H$
Scan group x multicycle register 1	ADCDnSGMCYCR1	<ADCDn_base> + $51C_H$
Scan group x multicycle register 2	ADCDnSGMCYCR2	<ADCDn_base> + $59C_H$
Scan group x multicycle register 3	ADCDnSGMCYCR3	<ADCDn_base> + $61C_H$
Scan group x multicycle register 4	ADCDnSGMCYCR4	<ADCDn_base> + $69C_H$
Scan group x status register 0	ADCDnSGSR0	<ADCDn_base> + $4A4_H$
Scan group x status register 1	ADCDnSGSR1	<ADCDn_base> + 524_H
Scan group x status register 2	ADCDnSGSR2	<ADCDn_base> + $5A4_H$
Scan group x status register 3	ADCDnSGSR3	<ADCDn_base> + 624_H
Scan group x status register 4	ADCDnSGSR4	<ADCDn_base> + $6A4_H$
AD timer initial phase register 3	ADCDnADTIPR3	<ADCDn_base> + 628_H
AD timer initial phase register 4	ADCDnADTIPR4	<ADCDn_base> + $6A8_H$
AD timer period register 3	ADCDnADTPRR3	<ADCDn_base> + $62C_H$
AD timer period register 4	ADCDnADTPRR4	<ADCDn_base> + $6AC_H$
Scan group x upper-limit/lower-limit table select register 0	ADCDnULLMSR0	<ADCDn_base> + $4B0_H$
Scan group x upper-limit/lower-limit table select register 1	ADCDnULLMSR1	<ADCDn_base> + 530_H
Scan group x upper-limit/lower-limit table select register 2	ADCDnULLMSR2	<ADCDn_base> + $5B0_H$
Scan group x upper-limit/lower-limit table select register 3	ADCDnULLMSR3	<ADCDn_base> + 630_H
Scan group x upper-limit/lower-limit table select register 4	ADCDnULLMSR4	<ADCDn_base> + $6B0_H$

30.3.2 ADCD0ADSYNSTCR — AD Synchronization Start Control Register

ADCD0ADSYNSTCR is an 8-bit write-only register that controls simultaneous start of A/D conversion for each scan group of ADCD0 and ADCD1. The register bits are always read as 0.

Access: This register can be written in 8-bit units.

Address: <ADCD0_base> + 300_H

Value after reset: 00_H

Bit	7	6	5	4	3	2	1	0
	—	—	—	—	—	—	—	ADSTART
Value after reset	0	0	0	0	0	0	0	0
R/W	R	R	R	R	R	R	R	W

Table 30.9 ADCD0ADSYNSTCR Register Contents

Bit Position	Bit Name	Function
7 to1	Reserved	When read, the value after reset is read. When writing, write the value after reset.
0	ADSTART	Starts simultaneous A/D conversion by scan groups of ADCD0 and ADCD1. 0: No function. (Writing 0 is ignored.) 1: A/D conversion is started simultaneously. Enable the SG synchronization start enable bit (ADCDnSGCRx.ADSTARTE) for simultaneous A/D conversion.

30.3.3 ADCD0ADTSYNSTCR — AD Timer Synchronization Start Control Register

ADCD0ADTSYNSTCR is an 8-bit write-only register that controls simultaneous start of count operation for each A/D timer of ADCD0 and ADCD1. The register bits are always read as 0.

Access: This register can be written in 8-bit units.

Address: <ADCD0_base> + 304_H

Value after reset: 00_H

Bit	7	6	5	4	3	2	1	0
	—	—	—	—	—	—	—	ADTSTART
Value after reset	0	0	0	0	0	0	0	0
R/W	R	R	R	R	R	R	R	W

Table 30.10 ADCD0ADTSYNSTCR Register Contents

Bit Position	Bit Name	Function
7 to 1	Reserved	When read, the value after reset is read. When writing, write the value after reset.
0	ADTSTART	Starts count operation of the A/D timer of ADCD0 and ADCD1 simultaneously. 0: No function. (Writing 0 is ignored.) 1: A/D timer count is started. Enable the A/D timer synchronization start enable bit (the ADCDnSGCRx.ADTSTARTE) for simultaneous A/D timer count operation.

30.3.4 ADCDnVCRj — Virtual Channel Register j

ADCDnVCRj is a 32-bit readable/writable register used for each virtual channel.

Access: This register can be read/written in 32-bit units.

Address: <ADCDn_base> + j × 4_H

Value after reset: $0000\ 0000_H$

Bit	31	30	29	28	27	26	25	24	23	22	21	20	19	18	17	16
	—	—	—	—	—	—	—	—	—	—	—	—	—	—	PUE	PDE
Value after reset	0	0	0	0	0	0	0	0	0	0	0	0	0	0	0	0
R/W	R	R	R	R	R	R	R	R	R	R	R	R	R	R	R/W	R/W

Bit	15	14	13	12	11	10	9	8	7	6	5	4	3	2	1	0
	CNVCLS[2:0]			—	—	—	—	—	ADIE	—	GCTRL[5:0]					
Value after reset	0	0	0	0	0	0	0	0	0	0	0	0	0	0	0	0
R/W	R/W	R/W	R/W	R	R	R	R	R	R/W	R	R/W	R/W	R/W	R/W	R/W	R/W

Table 30.11 ADCDnVCRj Register Contents (1/2)

Bit Position	Bit Name	Function
31 to 18	Reserved	When read, the value after reset is read. When writing, write the value after reset.
17	PUE	Pull-up Resistor Control for Physical I/O Channels 0: Pull-up resistor for the target physical I/O channel is off. 1: Pull-up resistor for the target physical I/O channel is on. When PUE = 1, this bit sets the pull-up resistor of the physical I/O channel specified for this virtual channel when the detection of wiring breaks is in use. **CAUTION** 1. Do not set the PDE and PUE bits at the same time. 2. Do not use the T&H circuits while PUE = 1. 3. Do not use the pin-level self-diagnosis while PUE = 1.
16	PDE	Pull-down Resistor Control for Physical I/O Channels 0: Pull-down resistor for the target physical I/O channel is off. 1: Pull-down resistor for the target physical I/O channel is on. When PDE = 1, this bit sets the pull-down resistor of the physical I/O channel specified for this virtual channel when the detection of wiring breaks is in use. **CAUTION** 1. Do not set the PDE and PUE bits at the same time. 2. Do not use the T&H circuits while PDE = 1. 3. Do not use the pin-level self-diagnosis while PDE = 1.
15 to 13	CNVCLS[2:0]	Conversion Type 0_H: Normal A/D conversion 1_H: Held value A/D conversion 2_H: Setting prohibited 3_H: Self-diagnosis 4_H: Normal A/D conversion in addition mode 5_H: Normal A/D conversion (with the external MPX) 6_H: Normal A/D conversion (with the external MPX) 7_H: Setting prohibited
12 to 8	Reserved	When read, the value after reset is read. When writing, write the value after reset.

Table 30.11 ADCDnVCRj Register Contents (2/2)

Bit Position	Bit Name	Function
7	ADIE	Virtual Channel End Interrupt Enable 0: INTADCDnIx is not output at virtual channel end of virtual channel n in SGx 1: INTADCDnIx is output at virtual channel end of virtual channel n in SGx ADIE in ADCDnSGCRx is independent of ADIE in ADCDnVCRj. For details, see **Section 30.4.5.1, Scan End Interrupt Request**.
6	Reserved	When read, the value after reset is read. When writing, write the value after reset.
5 to 0	GCTRL[5:0]	General Control

CNVCLS[2:0]	GCTRL[5:0]
0_H: Normal A/D conversion	GCTRL[4:0]: Physical channel number m*[1]
1_H: Held value A/D conversion	Physical channel number k of T&H supported pin 00_H: The voltage held by T&H0 is A/D converted. 01_H: The voltage held by T&H1 is A/D converted. 02_H: The voltage held by T&H2 is A/D converted. 03_H: The voltage held by T&H3 is A/D converted. 04_H: The voltage held by T&H4 is A/D converted. 05_H: The voltage held by T&H5 is A/D converted. Specify a pin for T&H listed in**Table 30.7, External Input/Output Signals**. Setting any of pins not supported for T&H is prohibited.
3_H: Self-diagnosis	00_H: AVREFH × 0 04_H: AVREFH × 1/4 08_H: AVREFH × 1/2 $0C_H$: AVREFH × 3/4 10_H: AVREFH × 1 Other than above: Setting prohibited
4_H: Normal A/D conversion in addition mode	GCTRL[4:0]: Physical channel number m*[1] *The count specified by ADDNT is applied to the number of additions.
5_H: Normal A/D conversion (with the external MPX)	GCTRL[4:0]: Set physical channel number m of MPX supported pin.
6_H: Normal A/D conversion (with the external MPX in addition mode)	GCTRL[4:0]: Set physical channel number m of MPX supported pin.
Other than above: Setting prohibited	—

Write 0 to the bits which are not used among GCTRL[5:0].

Note 1. Specify a physical channel ANnm listed in **Table 30.7, External Input/Output Signals**. Setting any of physical channels ANnm not incorporated is prohibited.

CAUTION

To prevent malfunctions, make ADCDnVCRj settings after making or confirming the following settings.

(1) HLDTE of T&H group A and B are 0.

(2) ADSTARTE of all scan groups are 0 and TRGMD of all scan groups are 0_H.

(3) SGACT of all scan groups are 0 (before scan groups are started).

However, if the above are for scan groups where ADCDnVCRj.PUE and ADCDnVCRj.PDE are being used to detect wiring breaks, the ADCDnVCRj.GCTRL[5:0] bits can be set while not all of the SGACT bits are 0 (0 indicating that conversion by the scan groups has not started yet) but the SGACT bits for the scan groups to be set are 0.

30.3.5 ADCDnDRj — Data Register j

ADCDnDRj is a 32-bit read-only register that stores the A/D conversion results corresponding to ADCDnVCRj and ADCDnVCR(j+1). As the A/D conversion results, the conversion result for ADCDnVCR(j+1) is stored in the upper bits (ADCDnDR(j+1)), and the conversion result for ADCDnVCRj is stored in the lower bits (ADCDnDRj). The format of ADCDnDRj varies according to the setting of ADCR2.DFMT and ADCR2.ADDNT when ADCDnVCRj.CNVCLS[2:0] are 4_H or 6_H. ADCDnDRj is cleared to 0000_H when ADCDnDRj or ADCDnDIRj is read while RDCLRE is set to 1.

Access: This register can be read in 32-bit units.

Address: <ADCDn_base> + 100_H + j × 2_H

Value after reset: 0000 0000_H

Bit	31	30	29	28	27	26	25	24	23	22	21	20	19	18	17	16
	DRj+1[15:0]															
Value after reset	0	0	0	0	0	0	0	0	0	0	0	0	0	0	0	0
R/W	R	R	R	R	R	R	R	R	R	R	R	R	R	R	R	R

Bit	15	14	13	12	11	10	9	8	7	6	5	4	3	2	1	0
	DRj[15:0]															
Value after reset	0	0	0	0	0	0	0	0	0	0	0	0	0	0	0	0
R/W	R	R	R	R	R	R	R	R	R	R	R	R	R	R	R	R

Table 30.12 ADCDnDRj Register Contents

Bit Position	Bit Name	Function
31 to 16	DRj+1[15:0]	DR(j+1)[15:0] store the A/D conversion result data. (The A/D conversion result for the channel set in ADCDnVCR(j+1) is transferred.)
15 to 0	DRj [15:0]	DRj [15:0] store the A/D conversion result data. (The A/D conversion result for the channel set in ADCDnVCRj is transferred.)

Note: j = 00, 02, 04 ... only even numbers

DRj[15:0] for signed fixed-point format (DFMT = 0)

Number of addition	15	14	13	12	11	10	9	8	7	6	5	4	3	2	1	0
Convert once	S													0	0	0
Convert twice	S														0	0
Convert 4 timers	S															0

↑ Position of decimal point

DRj[15:0] for signed integer format (DFMT = 1)

Number of addition	15	14	13	12	11	10	9	8	7	6	5	4	3	2	1	0
Convert once	S	S	S	S												
Convert twice	S	S	S													
Convert 4 timers	S	S														

Position of decimal point

S	: Sign bit (always 0)
0	: Zero extension

The format setting in ADDNT is valid when CNVCLS[2:0] = $4_{H\ or}\ 6_H$.

If CNVCLS[2:0] is neither 4_H nor 6_H, the format is “convert once.”

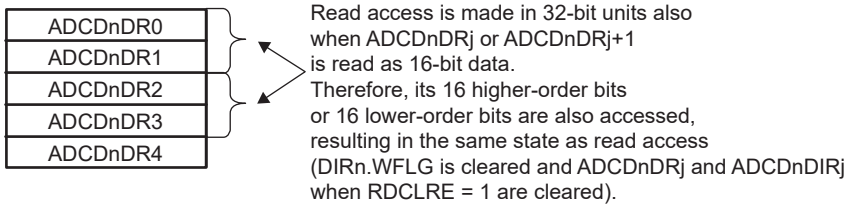

30.3.6 ADCDnDIRj —Data Supplementary Information Register j

ADCDnDIRj is a 32-bit read-only register that stores supplementary information on ADCDnDRj and the A/D converted value. ADCDnDIRj is provided for each virtual channel. ADCDnDIRj is cleared to $0000\ 0000_H$ when ADCDnDRj or ADCDnDIRj is read while RDCLRE is set to 1. WFLG is cleared when ADCDnDRj or ADCDnDIRj is read regardless of the RDCLRE setting. This register must always be read as 32-bit data. ADCDnDRj is read from the 16 lower-order bits.

Access: This register can be read in 32-bit units.

Address: <ADCDn_base> + 200_H + j × 4_H

Value after reset: $0000\ 0000_H$

Bit	31	30	29	28	27	26	25	24	23	22	21	20	19	18	17	16
	—	—	—	—	—	—	WFLG	PRTY	—	—	—	ID[4;0]				
Value after reset	0	0	0	0	0	0	0	0	0	0	0	0	0	0	0	0
R/W	R	R	R	R	R	R	R	R	R	R	R	R	R	R	R	R

Bit	15	14	13	12	11	10	9	8	7	6	5	4	3	2	1	0
	DRj[15:0]															
Value after reset	0	0	0	0	0	0	0	0	0	0	0	0	0	0	0	0
R/W	R	R	R	R	R	R	R	R	R	R	R	R	R	R	R	R

Table 30.13 ADCDnDIRj Register Contents (1/2)

Bit Position	Bit Name	Function
31 to 26	Reserved	When read, the value after reset is read. When writing, write the value after reset.
25	WFLG	Write Flag • Setting condition An A/D converted value is stored in ADCDnDRj • Clearing conditions ADCDnDRj or ADCDnDIRj is read.
24	PRTY	Parity Parity bit (even parity) for DRj[15:0] and ID[4:0].
23 to 21	Reserved	When read, the value after reset is read. When writing, write the value after reset.

Table 30.13 ADCDnDIRj Register Contents (2/2)

Bit Position	Bit Name	Function
20 to 16	ID[4:0]	Hold the ID information.

CNVCLS[2:0]	ID[4:0]
0_H: Normal A/D conversion	Hold the physical channel information which has actually been A/D converted. ID[4:0]: Physical channel number
1_H: Held value A/D conversion	Indicate the A/D converted value of the voltage held by the T&H circuit. 0_H: The voltage held by T&H0 is A/D converted. 1_H: The voltage held by T&H1 is A/D converted. 2_H: The voltage held by T&H2 is A/D converted. 3_H: The voltage held by T&H3 is A/D converted. 4_H: The voltage held by T&H4 is A/D converted. 5_H: The voltage held by T&H5 is A/D converted.
3_H: Self-diagnosis	Indicate the self-diagnosis level after conversion. 00_H: AVREFH × 0 04_H: AVREFH × 1/4 08_H: AVREFH × 1/2 $0C_H$: AVREFH × 3/4 10_H: AVREFH × 1 Other than above: Setting prohibited
4_H: Normal A/D conversion in addition mode	Hold the physical channel information which has actually been A/D converted. ID[4:0]: Physical channel number
5_H: Normal A/D conversion with the MPX	Hold the physical channel number of the MPX pin.
6_H: Normal A/D conversion with the MPX in addition mode	Hold the physical channel number of the MPX pin.
Other than above: Setting prohibited	—

15 to 0	DRj[15:0]	Data Register The same data as that in the ADCDnDRj register is stored as an A/D conversion result.

30.3.7 ADCDnSMPCR — A/D Conversion Time Control Register

ADCDnSMPCR is a 16-bit readable/writable register that controls the A/D conversion time.

ADCDn supports 1-µs conversion and 11.3-µs conversion.

Access: This register can be read/written in 16-bit units.

Address: <ADCDn_base> + 340_H

Value after reset: 0000_H

Bit	15	14	13	12	11	10	9	8	7	6	5	4	3	2	1	0
	SMPCR[15:0]															
Value after reset	0	0	0	0	0	0	0	0	0	0	0	0	0	0	0	0
R/W	R/W	R/W	R/W	R/W	R/W	R/W	R/W	R/W	R/W	R/W	R/W	R/W	R/W	R/W	R/W	R/W

Table 30.14 ADCDnSMPCR Register Contents

Bit Position	Bit Name	Function
15 to 0	SMPCR[15:0]	Set the A/D conversion time. 0000H: 1-µs conversion 90CCH: 11.3-µs conversion Settings other than the above are prohibited. **CAUTION** For 1-µs conversion, set the CLK_ADC frequency to 40 MHz. If you wish to use 11.3-µs conversion, be sure to set the CLK_ADC frequency to 20 MHz. Use register ADCKSC0CTL to set the CLK_ADC frequency. For details, see **Section 12.4.3.5, ADCKSC0CTL — A/D Clock Selection Control Register 0**.

CAUTIONS

1. **If ADCDnSMPCR is changed, the unit for counting of the wait time to be inserted when waiting for MPX will change accordingly. For details, see Section 30.3.12, ADCDnMPXOWR — MPX Optional Wait Register.**
2. **To prevent malfunctions, make ADCDnSMPCR settings after making or confirming the following settings.**

   (1) HLDTE of T&H group A and B are 0.

   (2) ADSTARTE of all scan groups are 0 and TRGMD of all scan groups are 0_H.

   (3) SGACT of all scan groups are 0 (before scan groups are started).

30.3.8 ADCDnADHALTR — AD Halt Register

ADCDnADHALTR is an 8-bit write-only register that halts the ADC. The register bits are always read as 0.

Access: This register can be written in 8-bit units.

Address: <ADCDn_base> + 380_H

Value after reset: 00_H

Bit	7	6	5	4	3	2	1	0
	—	—	—	—	—	—	—	HALT
Value after reset	0	0	0	0	0	0	0	0
R/W	R	R	R	R	R	R	R	W

Table 30.15 ADCDnADHALTR Register Contents

Bit Position	Bit Name	Function
7 to 1	Reserved	When read, the value after reset is read. When writing, write the value after reset.
0	HALT	All scan group conversions and AD timers are halted forcibly. 0: No function (Writing 0 is ignored.) 1: Halted

30.3.9 ADCDnADCR1 — AD Control Register 1

ADCDnADCR1 is an 8-bit readable/writable register for ADC common control.

Access: This register can be read/written in 8-bit units.

Address: <ADCDn_base> + 384_H

Value after reset: 00_H

Bit	7	6	5	4	3	2	1	0
	—	—	—	—	—	—	SUSMTD[1:0]	
Value after reset	0	0	0	0	0	0	0	0
R/W	R	R	R	R	R	R	R/W	R/W

Table 30.16 ADCDnADCR1 Register Contents

Bit Position	Bit Name	Function
7 to 2	Reserved	When read, the value after reset is read. When writing, write the value after reset.
1, 0	SUSMTD [1:0]	Suspend Method These bits select the suspend method when a higher-priority scan group interrupts a lower-priority scan group. Synchronous suspend: If a request from a higher-priority SG is present while a lower-priority SG is being processed, processing for the lower-priority SG is suspended after the ongoing virtual channel processing is completed, and then processing for the higher-priority SG is executed. After processing for the higher-priority SG is completed, the suspended virtual channel processing for the lower-priority SG is resumed. Asynchronous suspend: If a request from a higher-priority SG is present while a lower-priority SG is being processed, the ongoing virtual channel processing is immediately suspended, and then processing for the higher-priority SG is executed. After processing for the higher-priority SG is completed, the suspended virtual channel processing for the lower-priority SG is resumed. • When ADCDnTHACR.HLDCTE = 0 and ADCDnTHBCR.HLDCTE = 0. 0_H: Synchronous suspend 1_H: Asynchronous suspend when a higher-priority SG interrupts SG0 Synchronous suspend when a higher-priority SG interrupts a lower-priority SG (except for SG0) 2_H: Asynchronous suspend 3_H: Setting prohibited • When ADCDnTHACR.HLDCTE = 1 or ADCDnTHBCR.HLDCTE = 1 2_H: Asynchronous suspend Other than above: Setting prohibited For details, see **Figure 30.13, Example of Synchronous Suspend and Resume Operation** and **Figure 30.14, Example of Asynchronous Suspend and Resume Operation**.

CAUTIONS

1. **To prevent malfunctions, make ADCDnADCR1 settings after making or confirming the following settings.**
   (1) HLDTE of T&H group A and B are 0.
   (2) ADSTARTE of all scan groups are 0 and TRGMD of all scan groups are 0_H.
   (3) SGACT of all scan groups are 0 (before scan groups are started).
2. **SGx hold trigger can be selected for the trigger input to SGx only when SUMTD[1:0] = 2_H (asynchronous suspend). Other settings are prohibited.**

30.3.10 ADCDnMPXCURCR — MPX Current Control Register

ADCDnMPXCURCR is a register that controls the ADCDnMPXCURR format.

Access: This register can be read/written in 8-bit units.

Address: <ADCDn_base> + 388_H

Value after reset: 00_H

Bit	7	6	5	4	3	2	1	0
	—	—	—	—	MSKCFMT[3:0]			
Value after reset	0	0	0	0	0	0	0	0
R/W	R	R	R	R	R/W	R/W	R/W	R/W

Table 30.17 ADCDnMPXCURCR Register Contents

Bit Position	Bit Name	Function
7 to 4	Reserved	When read, the value after reset is read. When writing, write the value after reset.
3 to 0	MSKCFMT[3:0]	MSKC Format Specification Specify the MSKC[15:0] format of ADCDnMPXCURR MSKCFMT[3] 0: MSKC[15:12] = 0000 1: MSKC[15:12] = 1111 MSKCFMT[2] 0: MSKC[11:8] = 0000 1: MSKC[11:8] = 1111 MSKCFMT[1] 0: MSKC[7:4] = 0000 1: MSKC[7:4] = 1111 MSKCFMT[0] 0: MSKC[3:0] = 0000 1: MSKC[3:0] = 1111

CAUTION

To prevent malfunctions, make ADCDnMPXCURCR settings after making or confirming the following settings.

(1) HLDTE of T&H group A and B are 0.

(2) ADSTARTE of all scan groups are 0 and TRGMD of all scan groups are 0_H.

(3) SGACT of all scan groups are 0 (before scan groups are started).

30.3.11 ADCDnMPXCURR — MPX Current Register

ADCDnMPXCURR is a 32-bit read-only register that stores the MPX value for an external analog multiplexer.

Access: This register can be read in 32-bit units.

Address: <ADCDn_base> + $38C_H$

Value after reset: $0000\ 0000_H$

Bit	31	30	29	28	27	26	25	24	23	22	21	20	19	18	17	16
	MSKC[15:0]															
Value after reset	0	0	0	0	0	0	0	0	0	0	0	0	0	0	0	0
R/W	R	R	R	R	R	R	R	R	R	R	R	R	R	R	R	R

Bit	15	14	13	12	11	10	9	8	7	6	5	4	3	2	1	0
	—	—	—	—	—	—	—	—	—	—	—	MPXCUR[4:0]				
Value after reset	0	0	0	0	0	0	0	0	0	0	0	0	0	0	0	0
R/W	R	R	R	R	R	R	R	R	R	R	R	R	R	R	R	R

Table 30.18 ADCDnMPXCURR Register Contents

Bit Position	Bit Name	Function
31 to 16	MSKC[15:0]	Mask Control The format depends on the MSKCFMT[3:0] setting of ADCDnMPXCURCR. For details, see **Section 30.3.10, ADCDnMPXCURCR — MPX Current Control Register**.
15 to 5	Reserved	When read, the value after reset is read. When writing, write the value after reset.
4 to 0	MPXCUR[4:0]	Current MPX value When a virtual channel for which CNVCLS[2:0] in ADCDnVCRj is set to 5_H or 6H is started, GCTRL[4:0] in ADCDnVCRj is transferred to MPXCUR[4:0]. At this time, an interrupt request to the INTC or a DMA transfer request is generated. The DMAC transfers ADCDnMPXCURR to PSRn of the I/O port, enabling the MPX value to be sent to an external analog multiplexer. When PSRn is used, transfer the MPX value as a 32-bit value. This enables rewriting of only the necessary ports using the format control in MSKC[15:0]. For details, see **Section 30.4.1.5, Example of Using an External Analog Multiplexer (Port Output)**.

CAUTION

For a DMA transfer to the PSRn register, the MSKC bit is specified in 4-bit units (register ADCDnMPXCURCR). When MSKCFMT[1]=1(MSKC[7:4]=1111_B), the PnPn[7:4] bits are updated. Do not use as an output port since the 3 higher-order bits of the Pn register are overwritten unexpectedly.

30.3.12 ADCDnMPXOWR — MPX Optional Wait Register

ADCDnMPXOWR is a register that specifies the wait time to be inserted for an external analog multiplexer.

Access: This register can be read/written in 8-bit units.

Address: <ADCDn_base> + 390_H

Value after reset: 00_H

Bit	7	6	5	4	3	2	1	0
	—	—	—	—	MPXOW[3:0]			
Value after reset	0	0	0	0	0	0	0	0
R/W	R	R	R	R	R/W	R/W	R/W	R/W

Table 30.19 ADCDnMPXOWR Register Contents

Bit Position	Bit Name	Function
7 to 4	Reserved	When read, the value after reset is read. When writing, write the value after reset.
3 to 0	MPXOW	MPX Optional Wait These bits specify the wait time to be inserted before A/D conversion is started after a virtual channel for which CNVCLS[2:0] in ADCDnVCRj is 5H or 6H is started. 1H: A/D conversion time × 1 2H: A/D conversion time × 2 3H: A/D conversion time × 3 4H: A/D conversion time × 4 5H: A/D conversion time × 5 6H: A/D conversion time × 6 7H: A/D conversion time × 7 8H: A/D conversion time × 8 9H: A/D conversion time × 9 AH: A/D conversion time × 10 BH to FH: Setting prohibited For the A/D conversion time, see **Section 30.3.7, ADCDnSMPCR — A/D Conversion Time Control Register**.

CAUTION

To prevent malfunctions, make ADCDnMPXOWR settings after making or confirming the following settings.

(1) HLDTE of T&H group A and B are 0.

(2) ADSTARTE of all scan groups are 0 and TRGMD of all scan groups are 0H.

(3) SGACT of all scan groups are 0 (before scan groups are started).

30.3.13 ADCDnADCR2 — AD Control Register 2

ADCDnADCR2 is an 8-bit readable/writable register for ADCD common control.

Access: This register can be read/written in 8-bit units.

Address: <ADCDn_base> + 398_H

Value after reset: 00_H

Bit	7	6	5	4	3	2	1	0
	—	—	—	DFMT	—	—	—	ADDNT
Value after reset	0	0	0	0	0	0	0	0
R/W	R	R	R	R/W	R	R	R	R/W

Table 30.20 ADCDnADCR2 Register Contents

Bit Position	Bit Name	Function
7 to 5	Reserved	When read, the value after reset is read. When writing, write the value after reset.
4	DFMT	Data Format 0: Signed fixed-point format 1: Signed integer format This bit specifies the format of data to be transferred to ADCDnDRj. For details of data format, see **Section 30.3.5, ADCDnDRj — Data Register j**.
3 to 1	Reserved	When read, the value after reset is read. When writing, write the value after reset.
0	ADDNT	Addition Count Select 0: Add twice 1: Add 4 times This bit is valid only when CNVCLS[2:0] is 4_H,6_H

CAUTION

To prevent malfunctions, make ADCDnADCR2 settings after making or confirming the following settings.

(1) HLDTE of T&H group A and B are 0.

(2) ADSTARTE of all scan groups are 0 and TRGMD of all scan groups are 0_H.

(3) SGACT of all scan groups are 0 (before scan groups are started).

30.3.14 ADCDnADENDPz — A/D Conversion Monitor Virtual Channel Pointer z

ADCDnADENDPz is an 8-bit readable/writable register that selects the virtual channel that outputs the A/D conversion timing to ADCDnCNVx.

Access: This register can be read/written in 8-bit units.

Address: ADCDnADENDP0: <ADCDn_base> + $3A0_H$
ADCDnADENDP1: <ADCDn_base> + $3A4_H$
ADCDnADENDP2: <ADCDn_base> + $3A8_H$
ADCDnADENDP3: <ADCDn_base> + $3AC_H$
ADCDnADENDP4: <ADCDn_base> + $3B0_H$

Value after reset: 00_H

Bit	7	6	5	4	3	2	1	0
	—	—	ENDP[5:0]					
Value after reset	0	0	0	0	0	0	0	0
R/W	R	R	R/W	R/W	R/W	R/W	R/W	R/W

Table 30.21 ADCDnADENDPz Register Contents

Bit Position	Bit Name	Function
7, 6	Reserved	When read, the value after reset is read. When writing, write the value after reset.
5 to 0	ENDP[5:0]	A/D Conversion Monitor Virtual Channel Pointer When the virtual channel selected by ADCDnADENDPz is started, a high level is output to from the ADCDnCNVz pin. When the virtual channel selected by ADCDnADENDPz ends, a low level is output.

CAUTION

To prevent malfunctions, make ADCDnADENDPz settings after making or confirming the following settings.

(1) HLDTE of T&H group A and B are 0.

(2) ADSTARTE of all scan groups are 0 and TRGMD of all scan groups are 0_H.

(3) SGACT of all scan groups are 0 (before scan groups are started).

30.3.15 ADCDnTHSMPSTCR — T&H Sampling Start Control Register

ADCDnTHSMPSTCR is an 8-bit write-only register that control starting of all T&H sampling. The register bits are always read as 0.

Access: This register can be written in 8-bit units.

Address: <ADCDn_base> + 400_H

Value after reset: 00_H

Bit	7	6	5	4	3	2	1	0
	—	—	—	—	—	—	—	SMPST
Value after reset	0	0	0	0	0	0	0	0
R/W	R	R	R	R	R	R	R	W

Table 30.22 ADCDnTHSMPSTCR Register Contents

Bit Position	Bit Name	Function
7 to 1	Reserved	When read, the value after reset is read. When writing, write the value after reset.
0	SMPST	Starts T&H sampling. 0: No function. (Writing 0 is ignored.) 1: Sampling is started. Conditions for T&Hk to transit to the sampling state: 1 is written to SMPST while THkE = 1 At completion of A/D conversion of the value held by T&Hz while THkE = 1 and ASMPMSK = 0

30.3.16 ADCDnTHSTPCR — T&H Stop Control Register

ADCDnTHSTPCR is an 8-bit write-only register that controls stopping of all T&H. The register bits are always read as 0.

Access: This register can be write in 8-bit units.

Address: <ADCDn_base> + 404_H

Value after reset: 00_H

Bit	7	6	5	4	3	2	1	0
	—	—	—	—	—	—	—	THSTP
Value after reset	0	0	0	0	0	0	0	0
R/W	R	R	R	R	R	R	R	W

Table 30.23 ADCDnTHSTPCR Register Contents

Bit Position	Bit Name	Function
7 to 1	Reserved	When read, the value after reset is read. When writing, write the value after reset.
0	THSTP	Stops T&H. 0: No function. (Writing 0 is ignored.) 1: T&H is stopped.

CAUTION

Set THSTP after all scan groups are stopped by ADCDnADHALTR.HALT.

After T&H are forcibly terminated by THSTP, set all THzE (z = 0 to 5) of ADCDnTHER to 0 to prevent re-sampling by auto sampling function (ADCDnTHCR.ASMPMASK).

30.3.17 ADCDnTHCR — T&H Control Register

ADCD0THCR in an 8-bit readable/writable register that controls T&H.

Access: This register can be read/written in 8-bit units.

Address: <ADCDn_base> + 408_H

Value after reset: 00_H

Bit	7	6	5	4	3	2	1	0
	—	—	—	—	—	—	—	ASMPMSK
Value after reset	0	0	0	0	0	0	0	0
R/W	R	R	R	R	R	R	R	R/W

Table 30.24 ADCDnTHCR Register Contents

Bit Position	Bit Name	Function
7 to 1	Reserved	When read, the value after reset is read. When writing, write the value after reset.
0	ASMPMSK	Controls whether to start auto sampling of the T&H when A/D conversion of the relevant held value is complete. 0: Automatic sampling is performed. 1: Automatic sampling is not performed.

CAUTION

To prevent malfunctions, make ADCDnTHCR settings after making or confirming the following settings.

(1) HLDTE of T&H group A and B are 0.

(2) SGACT of the scan group x specified by SGS[1:0] of T&H group A and B are 0 (before scan groups are started).

(3) THkE of all T&H are 0 (All T&H are stopped).

30.3.18 ADCDnTHAHLDSTCR — T&H Group A Hold Start Control Register

ADCDnTHAHLDSTCR is an 8-bit write-only register that controls the start of the hold for T&H group A. The register bits are always read as 0.

Access: This register can be written in 8-bit units.

Address: <ADCDn_base> + 410_H

Value after reset: 00_H

Bit	7	6	5	4	3	2	1	0
	—	—	—	—	—	—	—	HLDST
Value after reset	0	0	0	0	0	0	0	0
R/W	R	R	R	R	R	R	R	W

Table 30.25 ADCDnTHAHLDSTCR Register Contents

Bit Position	Bit Name	Function
7 to 1	Reserved	When read, the value after reset is read. When writing, write the value after reset.
0	HLDST	Starts the hold of T&H group A. 0: No function (Writing 0 is ignored.) 1: The hold is started.

30.3.19 ADCDnTHBHLDSTCR — T&H Group B Hold Start Control Register

ADCDnTHBHLDSTCR is an 8-bit write-only register that controls the start of the hold for T&H group B. The register bits are always read as 0.

Access: This register can be written in 8-bit units.

Address: <ADCDn_base> + 414_H

Value after reset: 00_H

Bit	7	6	5	4	3	2	1	0
	—	—	—	—	—	—	—	HLDST
Value after reset	0	0	0	0	0	0	0	0
R/W	R	R	R	R	R	R	R	W

Table 30.26 ADCDnTHAHLDSTCR Register Contents

Bit Position	Bit Name	Function
7 to 1	Reserved	When read, the value after reset is read. When writing, write the value after reset.
0	HLDST	Starts the hold of T&H group B. 0: No function (Writing 0 is ignored.) 1: The hold is started.

30.3.20 ADCDnTHACR — T&H Group A Control Register

ADCDnTHACR is an 8-bit readable/writable register that controls T&H group A.

Access: This register can be read/written in 8-bit units.

Address: <ADCDn_base> + 420_H

Value after reset: 00_H

Bit	7	6	5	4	3	2	1	0
	—	—	HLDCTE	HLDTE	—	—	SGS[1:0]	
Value after reset	0	0	0	0	0	0	0	0
R/W	R	R	R/W	R/W	R	R	R/W	R/W

Table 30.27 ADCDnTHACR Register Contents

Bit Position	Bit Name	Function
7, 6	Reserved	When read, the value after reset is read. When writing, write the value after reset.
5	HLDCTE	
4	HLDTE	

HLDCTE	HLDTE	Function
0	0	The hold trigger of T&H group A is disabled.
0	1	Setting prohibited.
1	0	The software trigger by the ADCDnTHAHLDSTCR.HLDST is selected as the hold trigger for the SG selected in SGS[1:0]. Hardware trigger is disabled.[Note]
1	1	SGx_TRG hardware trigger is selected as the hold trigger for the SG selected in SGS[1:0].[Note]

Note: A/D conversion is forcibly suspended during the period from hold trigger to hold completion. SUSMTD[1:0] should be 2_H. (Setting of SUSMTD[1:0] = 0_H or 1_H is prohibited.)
The setting of TRGMD of the scan group selected in SGS[1:0] should be 1_H (Setting of TRGMD = 0_H, 2_H, or 3_H is prohibited.)

When modifying HLDTE from 1 to 0 (SGx_TRG hardware trigger is disabled) when HLDCTE = 1 and during operation, follow the procedure below:
(1) Change HLDTE from 1 to 0
(2) Change TRGMD of the scan group x selected in SGS[1:0] from 1 to 0
When modifying HLDTE from 0 to 1 (SGx_TRG hardware trigger is selected):
(1) Change TRGMD of the scan group x selected in SGS[1:0] from 0 to 1
(2) Change HLDTE from 0 to 1.

Bit Position	Bit Name	Function
3, 2	Reserved	When read, the value after reset is read. When writing, write the value after reset.
1, 0	SGS[1:0]	Scan Group Select Selects the scan group for T&H group A. 0_H: SG1 1_H: SG2 2_H: SG3 3_H: SG4 For details, see **Section 30.4.1.3, Simultaneous Track and Hold Operation (THC Control)**. **CAUTION** This bit is enabled when HLDCTE = 1. Designate a scan group which include the virtual channel subject to T&H conversion.

CAUTION

To prevent malfunctions, make settings for ADCDnTHACR.HLDCTE and ADCD0THACR.SGS[1:0] after making or confirming the following settings.

(1) HLDTE of T&H group A and B are 0.

(2) SGACT of all scan groups are 0 (before scan groups are started).

Do not set the SGS[1:0] bit of ADCDnTHACR and ADCDnTHBCR to the same scan group when both T&H group A and B are used.

30.3.21 ADCDnTHBCR — T&H Group B Control Register

ADCDnTHBCR is an 8-bit readable/writable register that controls T&H group B.

Access: This register can be read/written in 8-bit units.

Address: <ADCDn_base> + 424_H

Value after reset: 00_H

Bit	7	6	5	4	3	2	1	0
	—	—	HLDCTE	HLDTE	—	—	SGS[1:0]	
Value after reset	0	0	0	0	0	0	0	0
R/W	R	R	R/W	R/W	R	R	R/W	R/W

Table 30.28 ADCDnTHBCR Register Contents

Bit Position	Bit Name	Function
7, 6	Reserved	When read, the value after reset is read. When writing, write the value after reset.
5	HLDCTE	
4	HLDTE	

HLDCTE	HLDTE	Function
0	0	The hold trigger of T&H group B is disabled.
0	1	Setting prohibited.
1	0	The software trigger by the ADCDnTHBHLDSTCR.HLDST is selected as the hold trigger for the SG selected in SGS[1:0]. Hardware trigger is disabled.[Note]
1	1	SGx_TRG hardware trigger is selected as the hold trigger for SG selected in SGS[1:0].[Note]

Note: A/D conversion is forcibly suspended during the period from hold trigger to hold completion. SUSMTD[1:0] should be 2_H. (Setting of SUSMTD[1:0] = 0_H or 1_H is prohibited.)
The setting of TRGMD of the scan group selected in SGS[1:0] should be 1H (Setting of TRGMD = 0_H, 2_H, or 3_H is prohibited.)

When modifying HLDTE from 1 to 0 (SGx_TRG hardware trigger is disabled) when HLDCTE = 1 and during operation, follow the procedure below:
(1) Change HLDTE from 1 to 0
(2) Change TRGMD of the scan group x selected in SGS[1:0] from 1 to 0
When modifying HLDTE from 0 to 1 (SGx_TRG hardware trigger is selected):
(1) Change TRGMD of the scan group x selected in SGS[1:0] from 0 to 1
(2) Change HLDTE from 0 to 1.

Bit Position	Bit Name	Function
3, 2	Reserved	When read, the value after reset is read. When writing, write the value after reset.
1, 0	SGS[1:0]	Scan Group Select Select the scan group for T&H group B. 0_H: SG1 1_H: SG2 2_H: SG3 3_H: SG4 For details, see **Section 30.4.1.3, Simultaneous Track and Hold Operation (THC Control)**. **CAUTION** This bit is enabled when HLDCTE = 1. Designate a scan group which include the virtual channel subject to T&H conversion.

CAUTION

To prevent malfunctions, make settings for ADCDnTHBCR.HLDCTE and ADCD0THBCR.SGS[1:0] after making or confirming the following settings.

(1) HLDTE of T&H group A and B are 0.

(2) SGACT of all scan groups are 0 (before scan groups are started).

Do not set the SGS[1:0] bit of ADCDnTHACR and ADCDnTHBCR to the same scan group when both T&H group A and B are used.

30.3.22 ADCDnTHER — T&H Enable Register

ADCD0THER is an 8-bit readable/writable register that controls enabling and disabling of each T&H.

Access: This register can be read/written in 8-bit units.

Address: <ADCDn_base> + 430_H

Value after reset: 00_H

Bit	7	6	5	4	3	2	1	0
	—	—	TH5E	TH4E	TH3E	TH2E	TH1E	TH0E
Value after reset	0	0	0	0	0	0	0	0
R/W	R	R	R/W	R/W	R/W	R/W	R/W	R/W

Table 30.29 ADCDnTHER Register Contents

Bit Position	Bit Name	Function
7, 6	Reserved	When read, the value after reset is read. When writing, write the value after reset.
5 to 0	THkE	Enable or disable track and hold operation of T&Hk circuit. 0: Disabled 1: Enabled For details, see **Section 30.4.1.3, Simultaneous Track and Hold Operation (THC Control)**.

CAUTION

To prevent malfunctions, make ADCDnTHER settings after making or confirming the following settings.

(1) HLDTE of T&H group A and B are 0.

(2) SGACT of the scan group x specified in SGS[1:0] of the T&H group A and B are 0 (before scan groups are started).

30.3.23 ADCDnTHGSR — T&H Group Select Register

ADCDnTHGSR is a 16-bit readable/writable register that selects the T&H group of each T&H.

Access: This register can be read/written in 16-bit units.

Address: <ADCDn_base> + 434_H

Value after reset: 0000_H

Bit	15	14	13	12	11	10	9	8	7	6	5	4	3	2	1	0
	—	—	—	—	—	TH5GS	—	TH4GS	—	TH3GS	—	TH2GS	—	TH1GS	—	TH0GS
Value after reset	0	0	0	0	0	0	0	0	0	0	0	0	0	0	0	0
R/W	R	R	R	R	R	R/W	R	R/W	R	R/W	R	R/W	R	R/W	R	R/W

Table 30.30 ADCDnTHGSR Register Contents

Bit Position	Bit Name	Function
15 to 11, 9, 7, 5, 3, 1	Reserved	When read, the value after reset is read. When writing, write the value after reset.
10, 8, 6, 4, 2, 0	THkGS	Select the T&H group for T&Hk. 0: T&H group A is selected. 1: T&H group B is selected. For details, see **Section 30.4.1.3, Simultaneous Track and Hold Operation (THC Control)**

CAUTION

To prevent malfunctions, make settings for ADCDnTHGSR after making or confirming the following settings.

(1) HLDTE of T&H group A and B are 0.

(2) SGACT of the scan group x specified in SGS[1:0] of the T&H group A and B are 0 (before scan groups are started).

(3) THkE of all T&H are 0 (all T&H are stopped).

30.3.24 ADCDnSFTCR — Safety Control Register

ADCDnSFTCR is an 8-bit readable/writable register for safety control.

Access: This register can be read/written in 8-bit units.

Address: <ADCDn_base> + $3C0_H$

Value after reset: 00_H

Bit	7	6	5	4	3	2	1	0
	—	—	—	RDCLRE	ULEIE	OWEIE	PEIE	IDEIE
Value after reset	0	0	0	0	0	0	0	0
R/W	R	R	R	R/W	R/W	R/W	R/W	R/W

Table 30.31 ADCDnSFTCR Register Contents

Bit Position	Bit Name	Function
7 to 5	Reserved	When read, the value after reset is read. When writing, write the value after reset.
4	RDCLRE	Read and Clear Enable/Disable This bit sets whether to clear (ALL 0) the ADCDnDRj and ADCDnDIRj registers when reading the ADCDnDRj or ADCDnDIRj. 0: Do not perform read and clear 1: Perform read and clear **CAUTION** ADCDnDIRj.WFLG is cleared by reading ADCDnDRj or ADCDnDIRj regardless of the RDCLRE setting.
3	ULEIE	Enables or disables upper-limit/lower-limit error interrupt. 0: Disabled 1: Enabled
2	OWEIE	Enables or disables overwrite error interrupt. 0: Disabled 1: Enabled
1	PEIE	Enables or disables parity error interrupt. 0: Disabled 1: Enabled
0	IDEIE	Enables or disables ID error interrupt. 0: Disabled 1: Enabled

CAUTION

To prevent malfunctions, make ADCDnSFTCR settings after making or confirming the following settings.

(1) HLDTE of T&H group A and B are 0.

(2) ADSTARTE of all scan groups are 0 and TRGMD or all scan groups are 0_H.

(3) SGACT of all scan groups are 0 (before the scan group is started).

30.3.25 ADCDnTDCR —Pin Level Self-Diagnostic Control Register

ADCDnTDCR is an 8-bit readable/writable register that controls the pin level self-diagnosis.

Access: This register can be read/written in 8-bit units.

Address: <ADCDn_base> + $3C4_H$

Value after reset: 00_H

Bit	7	6	5	4	3	2	1	0
	TDE	—	—	—	—	—	TDLV[1:0]	
Value after reset	0	0	0	0	0	0	0	0
R/W	R/W	R	R	R	R	R	R/W	R/W

Table 30.32 ADCDnTDCR Register Contents

Bit Position	Bit Name	Function
7	TDE	Enables or disables pin level self-diagnosis. 0: Pin level self-diagnosis is disabled. 1: Pin level self-diagnosis is enabled. When TDE is set to 0, all analog pins are connected to the input buffer. When TDE is set to 1, all analog pins are disconnected from the input buffer, and the voltage is fixed to the level specified by TDLV[1:0]. Performing A/D conversion in this state and checking the A/D converted value allows diagnosis of the path from an analog pin to the ADCD. **CAUTION** 1. When TDE = 1, be sure to set both the PUE and PDE bits of ADCDnVCRj to 0. 2. Set ADCDnTDCR.TDE to 0 before setting the PUE and PDE bits of ADCDnVCRj to 1. Similarly, when setting ADCDnTDCR.TDE to 1, set the PUE and PDE bits of ADCDnVCRj for A/D conversion to 0 while ADCDnTDCR.TDE = 1 (the recommended setting is 0 for the PUE and PDE bits of all ADCDnVCRj registers).
6 to 2	Reserved	When read, the value after reset is read. When writing, write the value after reset.
1, 0	TDLV[1:0]	Set pin level self-diagnosis voltage level. 0: Apply AVSS to even-numbered physical channel groups and AVCC to odd-numbered physical channel groups. 1: Apply AVCC to even-numbered physical channel groups and AVSS to odd-numbered physical channel groups. 2: Apply AVSS to even-numbered physical channel groups and 1/2 × AVCC to odd-numbered physical channel groups. 3: Apply 1/2 × AVCC to even-numbered physical channel groups and 1/2 × AVSS to odd-numbered physical channel groups.

CAUTION

To prevent malfunctions, make ADCDnTDCR settings after making or confirming the following settings.

(1) HLDTE of T&H group A and B are 0.

(2) ADSTARTE of all scan groups are 0 and TRGMD or all scan groups are 0_H.

(3) SGACT of all scan groups are 0 (before scan groups are started).

When **Section 30.4.4.5, Pin-Level Self-Diagnosis of T&H Paths** is used, however, settings of ADCDnTDCR of the scan group in progress is possible only if the procedure is followed correctly.

30.3.26 ADCDnODCR — Wiring Break Detection Control Register

ADCDnODCR is a 32-bit readable/writable register that controls wiring-break detection.

Access: This register can be read/written in 32-bit units.

Address: <ADCDn_base> + $3C8_H$

Value after reset: $0000\ 0000_H$

Bit	31	30	29	28	27	26	25	24	23	22	21	20	19	18	17	16
	ODDE	—	—	—	—	—	—	—	—	—	—	—	—	—	—	—
Value after reset	0	0	0	0	0	0	0	0	0	0	0	0	0	0	0	0
R/W	R/W	R	R	R	R	R	R	R	R	R	R	R	R	R	R	R

Bit	15	14	13	12	11	10	9	8	7	6	5	4	3	2	1	0
	—	—	—	—	—	—	—	—	ODE	—	ODPW[5:0]					
Value after reset	0	0	0	0	0	0	0	0	0	0	0	0	0	0	0	0
R/W	R	R	R	R	R	R	R	R	R/W	R	R/W	R/W	R/W	R/W	R/W	R/W

Table 30.33 ADCDnODCR Register Contents

Bit Position	Bit Name	Function
31	ODDE	Enables or disables diagnosis of wiring-break detection. 0: Wiring-break detection is not diagnosed. 1: Wiring-break detection is diagnosed. When the ODDE bit is set to 1, diagnosis of wiring-break detection is enabled for all analog pins. **CAUTION** Do not set the ODE and ODDE bits at the same time.
30 to 8	Reserved	When read, the value after reset is read. When writing, write the value after reset.
7	ODE	Sets the mode for wiring-break detection. 0: Wiring-break detection mode 2 1: Wiring-break detection mode 1 For details, see **Section 30.4.4.3, Wiring-Break Detection**.
6	Reserved	When read, the value after reset is read. When writing, write the value after reset.
5 to 0	ODPW[5:0]	Set the width of pull-down pulse to be generated in wiring-break detection mode 1. 04_H: 1 clock 05_H: 2 clocks : 13_H: 16 clocks 14_H: 17 clocks When wiring-break detection mode 1 is used, the value must be greater than 03_H and less than 15_H.

CAUTIONS

1. To prevent malfunctions, make ADCDnODCR settings after making or confirming the following settings.
   (1) HLDTE of T&H group A and B are 0.
   (2) ADSTARTE of all scan groups are 0 and TRGMD of all scan groups are 0_H.
   (3) SGACT of all scan groups are 0 (before scan groups are started).
2. Do not perform A/D conversion of the held value (ADCDnVCRj.CNVCLS = 1_H) with wiring-break detection enabled.
   (To prevent malfunctions, use the wiring-break detection function after setting all THkE (k = 0 to 5) of ADCDnTHER to 0 or stopping all T&H by THSTPCR.THSTP.

30.3.27 ADOPDIGn — Wiring-break Detection Pin Setting Register n (n = 0, 1)

ADOPDIGn is a register that controls the pull-down/pull-up switch for I/O buffer of each analog input.

Access: This register can be read/written in 32-bit units.

Address: ADOPDIG0: FFF2 3000_H
ADOPDIG1: FFF2 3040_H

Value after reset: 0000 0000_H

Bit	31	30	29	28	27	26	25	24	23	22	21	20	19	18	17	16
	—	—	—	—	—	—	—	—	—	—	—	—	—	—	—	—
Value after reset	0	0	0	0	0	0	0	0	0	0	0	0	0	0	0	0
R/W	R	R	R	R	R	R	R	R	R	R	R	R	R	R	R	R

Bit	15	14	13	12	11	10	9	8	7	6	5	4	3	2	1	0
	—	—	—	—	ADOPDIGn11	ADOPDIGn10	ADOPDIGn09	ADOPDIGn08	ADOPDIGn07	ADOPDIGn06	ADOPDIGn05	ADOPDIGn04	ADOPDIGn03	ADOPDIGn02	ADOPDIGn01	ADOPDIGn00
Value after reset	0	0	0	0	0	0	0	0	0	0	0	0	0	0	0	0
R/W	R	R	R	R	R/W	R/W	R/W	R/W	R/W	R/W	R/W	R/W	R/W	R/W	R/W	R/W

Table 30.34 ADOPDIGn Register Contents

Bit Position	Bit Name	Function
31 to 12	Reserved	When read, the value after reset is read. When writing, write the value after reset.
11 to 0	ADOPDIGnm	Control the pull-down/pull-up settings for the wiring-break detection pin. Specify an analog pin for wiring-break detection. 0: Wiring-break Detection is not performed. 1: Wiring-break Detection is performed. When Wiring-break Detection mode 1 is used, wiring-break detection of an analog pin with setting this bit to 1 is performed. When Wiring-break Detection mode 2 is used, the setting of pull-up/pull-down of the analog pin (ADCDnVCRj.PDE/DCDnVCRj.PUE) with setting this bit to 1 is enabled.

CAUTIONS

1. To prevent malfunctions, make ADOPDIGn settings after making or confirming the following settings.
   (1) HLDTE of T&H group A and B are 0.
   (2) ADSTARTE of all scan groups are 0 and TRGMD of all scan groups are 0_H.
   (3) SGACT of all scan groups are 0 (before scan groups are started).
2. Do not perform A/D conversion of the held value (ADCDnVCRj.CNVCLS = 1_H) with wiring-break detection enabled. (To prevent malfunctions, use the wiring-break detection function after setting all THkE (k = 0 to 5) of ADCDnTHER to 0 or stopping all T&H by THSTPCR.THSTP).

30.3.28 ADCDnULLMTBR0 to 2 — Upper-limit/Lower-limit Table Registers 0 to 2

ADCDnULLMTBR0-2 are 32-bit readable/writable registers that set the upper-limit and lower-limit values of an A/D converted value. Specify any of ADCDnULLMTBR0 to 2 by ULS[1:0] in ADCDnULLMSRx.

Access: This register can be read/written in 32-bit units.

Address: ADCDmULLMTBR0: <ADCDn_base> + $3CC_H$
ADCDmULLMTBR1: <ADCDn_base> + $3D0_H$
ADCDmULLMTBR2: <ADCDn_base> + $3D4_H$

Value after reset: $7FFE\ 0000_H$

Bit	31	30	29	28	27	26	25	24	23	22	21	20	19	18	17	16
	ULMTB[15:0]															
Value after reset	0	1	1	1	1	1	1	1	1	1	1	1	1	1	1	0
R/W	R/W	R/W	R/W	R/W	R/W	R/W	R/W	R/W	R/W	R/W	R/W	R/W	R/W	R/W	R/W	R

Bit	15	14	13	12	11	10	9	8	7	6	5	4	3	2	1	0
	LLMTB[15:0]															
Value after reset	0	0	0	0	0	0	0	0	0	0	0	0	0	0	0	0
R/W	R/W	R/W	R/W	R/W	R/W	R/W	R/W	R/W	R/W	R/W	R/W	R/W	R/W	R/W	R/W	R

Table 30.35 ADCDnULLMTBR Register Contents

Bit Position	Bit Name	Function
31 to 16	ULMTB[15:0]	Upper Limit Table These bits specify the upper-limit value of an A/D converted value. ULE (upper limit/lower limit error) is set when the following condition is met. ULMTB[15:0] < A/D converted value The ULMTB[15:0] format is the signed fixed-point format regardless of the format of ADCDnDRj. If the signed integer format is selected for the ADCDnDRj format, the ADCDnDRj format is replaced with the signed fixed-point format, and then the values are compared. Note that ULMTB[15] and ULMTB[0] are always fixed to 0.
15 to 0	LLMTB[15:0]	Lower Limit Table These bits specify the lower-limit value of an A/D converted value. ULE (upper limit/lower limit error) is set when the following condition is met. LLMTB[15:0] > A/D converted value The LLMTB[15:0] format is the signed fixed-point format regardless of the format of ADCDnDRj. If the signed integer format is selected for the ADCDnDRj format, the ADCDnDRj format is replaced with the signed fixed-point format, and then the values are compared. Note that LLMTB[15] and LLMTB[0] are always fixed to 0.

CAUTION

To prevent malfunctions, make settings for ADCDnULLMTBR0 to 2 after making or confirming the following settings.

(1) HLDTE of T&H group A and B are 0.

(2) ADSTARTE of all scan groups are 0 and TRGMD or all scan groups are 0_H.

(3) SGACT of all scan groups are 0 (before scan groups are started).

The upper table (ULMTB[11:0]) must be set greater than the lower table (LLMTB[11:0]).

30.3.29 ADCDnECR — Error Clear Register

ADCDnECR is an 8-bit write-only register that controls error clear. The register bits are always read as 0.

Access: This register can be read in 8-bit units.

Address: <ADCDn_base> + $3D8_H$

Value after reset: 00_H

Bit	7	6	5	4	3	2	1	0
	—	—	—	—	ULEC	OWEC	PEC	IDEC
Value after reset	0	0	0	0	0	0	0	0
R/W	R	R	R	R	W	W	W	W

Table 30.36 ADCDnECR Register Contents

Bit Position	Bit Name	Function
7 to 4	Reserved	When read, the value after reset is read. When writing, write the value after reset.
3	ULEC	Upper Limit/Lower Limit Error Clear Clears the upper limit or lower limit errors (ADCDnULER.ULE) and the upper limit or lower limit error capture (ADCDnULER.ULECAP[5:0]). Writing 0: Not cleared Writing 1: Cleared
2	OWEC	Overwrite Error Clear Clears over write errors (ADCDnOWER.OWE) and over write error capture (ADCDnOWER.OWECAP[5:0]). Writing 0: Not cleared Writing 1: Cleared
1	PEC	Parity Error Clear Clears parity errors (ADCDnPER.PE) and parity error capture (ADCDnPER.PECAP[5:0]). Writing 0: Not cleared Writing 1: Cleared
0	IDEC	ID Error Clear Clears ID errors (ADCDnIER.IDE) and ID error capture (ADCDnIER.IDECAP[5:0]). Writing 0: Not cleared Writing 1: Cleared

30.3.30 ADCDnULER — Upper-limit/Lower-limit Error Register

ADCDnULER is an 8-bit read-only register that indicates upper limit/lower limit errors.

Access: This register can be read in 8-bit units.

Address: <ADCDn_base> + $3DC_H$

Value after reset: 00_H

Bit	7	6	5	4	3	2	1	0
	ULE	—	ULECAP[5:0]					
Value after reset	0	0	0	0	0	0	0	0
R/W	R	R	R	R	R	R	R	R

Table 30.37 ADCDnULER Register Contents

Bit Position	Bit Name	Function
7	ULE	Upper Limit/Lower Limit Error 0: No error 1: An error is present. Setting condition The A/D converted value exceeds the range of the specified upper limit/lower limit table Clearing condition A value of 1 is written to ULEC.
6	Reserved	When read, the value after reset is read. When writing, write the value after reset.
5 to 0	ULECAP[5:0]	Upper Limit/Lower Limit Error Capture The virtual channel at the time when an upper limit/lower limit error occurred is captured. Capturing condition ULE = 0 and the A/D converted value exceeds the range of the specified upper limit/lower limit table. Clearing condition A value of 1 is written to ULEC

CAUTION

ADCDnULER is updated when the AD converted value is written to ADCDnDRj.

30.3.31 ADCDnOWER — Overwrite Error Register

ADCDnOWER is an 8-bit read-only register that indicates an overwrite error.

Access: This register can be read in 8-bit units.

Address: <ADCDn_base> + $3E0_H$

Value after reset: 00_H

Bit	7	6	5	4	3	2	1	0
	OWE	—	OWECAP[5:0]					
Value after reset	0	0	0	0	0	0	0	0
R/W	R	R	R	R	R	R	R	R

Table 30.38 ADCDnOWER Register Contents

Bit Position	Bit Name	Function
7	OWE	Overwrite Error 0: No error 1: An error is present. Setting condition The A/D converted value is written to ADCDnDRj when WFLG = 1 Clearing condition A value of 1 is written to OWEC
6	Reserved	When read, the value after reset is read. When writing, write the value after reset.
5 to 0	OWECAP[5:0]	Overwrite Error Capture The virtual channel at the time when an overwrite error occurred is captured. Capturing condition The A/D converted value is written to ADCDnDRj when OWE = 0 and WFLG = 1. Clearing condition A value of 1 is written to OWEC

CAUTION

ADCDnOWER is updated when the AD converted value is written to ADCDnDRj.

30.3.32 ADCDnPER — Parity Error Register

ADCDnPER is an 8-bit read-only register that indicates a parity error.

Access: This register can be read in 8-bit units.

Address: <ADCDn_base> + $3E4_H$

Value after reset: 00_H

Bit	7	6	5	4	3	2	1	0
	PE	—	PECAP[5:0]					
Value after reset	0	0	0	0	0	0	0	0
R/W	R	R	R	R	R	R	R	R

Table 30.39 ADCDnPER Register Contents

Bit Position	Bit Name	Function
7	PE	Parity Error 0: No error 1: An error is present. Setting condition A parity error is detected. Clearing condition A value of 1 is written to PEC.
6	Reserved	When read, the value after reset is read. When writing, write the value after reset.
5 to 0	PECAP[5:0]	Parity Error Capture The virtual channel at the time when a parity error occurred is captured. Capturing condition A parity error is detected when PE = 0. Clearing condition A value of 1 is written to PEC.

CAUTION

ADCDnPER is updated when ADCDnDRj or ADCDnDIRj is read.

30.3.33 ADCDnIDER — ID Error Register

ADCDnIDER is an 8-bit read-only register that indicates an ID error.

Access: This register can be read in 8-bit units.

Address: <ADCDn_base> + $3E8_H$

Value after reset: 00_H

Bit	7	6	5	4	3	2	1	0
	IDE	—	IDECAP[5:0]					
Value after reset	0	0	0	0	0	0	0	0
R/W	R	R	R	R	R	R	R	R

Table 30.40 ADCDnIDER Register Contents

Bit Position	Bit Name	Function
7	IDE	ID Error 0: No error 1: An error is present. Setting condition The physical channel specified in ADCDnVCRj does not match the physical channel actually converted. Clearing condition A value of 1 is written to IDEC.
6	Reserved	When read, the value after reset is read. When writing, write the value after reset.
5 to 0	IDECAP[5:0]	ID Error Capture The virtual channel at the time when an ID error occurred is captured. Capturing condition The physical channel specified in ADCDnVCRj does not match the physical channel actually converted when IDE = 0. Clearing condition A value of 1 is written to IDEC.

CAUTION

ADCDnIDER is updated when the AD converted value is written to ADCDnDRj.

30.3.34 ADCDnSGSTCRx — Scan Group x Start Control Register

ADCDnSGSTCRx is an 8-bit write-only register that controls the start of scan group x. The register bits are always read as 0.

Access: This register can be written in 8-bit units.

Address: ADCDnSGSTCR0: <ADCDn_base> + 480_H
ADCDnSGSTCR1: <ADCDn_base> + 500_H
ADCDnSGSTCR2: <ADCDn_base> + 580_H
ADCDnSGSTCR3: <ADCDn_base> + 600_H
ADCDnSGSTCR4: <ADCDn_base> + 680_H

Value after reset: 00_H

Bit	7	6	5	4	3	2	1	0
	—	—	—	—	—	—	—	SGST
Value after reset	0	0	0	0	0	0	0	0
R/W	R	R	R	R	R	R	R	W

Table 30.41 ADCDnSGSTCRx Register Contents

Bit Position	Bit Name	Function
7 to 1	Reserved	When read, the value after reset is read. When writing, write the value after reset.
0	SGST	Starts A/D conversion for SGx. 0: No function (Writing 0 is ignored.) 1: Start A/D conversion while A/D conversion start scan group status (ADCDnSGSRx.SGACT) is 0.

30.3.35 ADCDnADTSTCRy — AD Timer y Start Control Register

ADCDnADTSTCRy is an 8-bit write-only register that controls the start of AD timer y. The register bits are always read as 0.

Access: This register can be written in 8-bit units.

Address: ADCDnADTSTCR3: <ADCDn_base> + 608_H
ADCDnADTSTCR4: <ADCDn_base> + 688_H

Value after reset: 00_H

Bit	7	6	5	4	3	2	1	0
	—	—	—	—	—	—	—	ADTST
Value after reset	0	0	0	0	0	0	0	0
R/W	R	R	R	R	R	R	R	W

Table 30.42 ADCDnADTSTCRy Register Contents

Bit Position	Bit Name	Function
7 to 1	Reserved	When read, the value after reset is read. When writing, write the value after reset.
0	ADTST	Starts A/D timer y. 0: No function (Writing 0 is ignored.) 1: AD timer is started. Start A/D timer while A/D timer status (ADCDnSGSRx.ADTACT) is 0.

30.3.36 ADCDnADTENDCRy — AD Timer y End Control Register

ADCDnADTENDCRy is an 8-bit write-only register that controls the end of the AD timer y. The register bits are always read as 0.

Access: This register can be written in 8-bit units.

Address: ADCDnADTENDCR3: <ADCDn_base> + $60C_H$
ADCDnADTENDCR4: <ADCDn_base> + $68C_H$

Value after reset: 00_H

Bit	7	6	5	4	3	2	1	0
	—	—	—	—	—	—	—	ADTEND
Value after reset	0	0	0	0	0	0	0	0
R/W	R	R	R	R	R	R	R	W

Table 30.43 ADCDnADTENDCRy Register Contents

Bit Position	Bit Name	Function
7 to 1	Reserved	When read, the value after reset is read. When writing, write the value after reset.
0	ADTEND	Ends A/D timer. 0: No function (Writing 0 is ignored.) 1: End A/D timer.

30.3.37 ADCDnSGCRx — Scan Group x Control Register

ADCDnSGCRx is an 8-bit readable/writable register that controls scan group x.

Access: This register can be read/written in 8-bit units.

Address: ADCDnSGCR0: <ADCDn_base> + 490_H
ADCDnSGCR1: <ADCDn_base> + 510_H
ADCDnSGCR2: <ADCDn_base> + 590_H
ADCDnSGCR3: <ADCDn_base> + 610_H
ADCDnSGCR4: <ADCDn_base> + 690_H

Value after reset: 00_H

- When x = 0 to 2

Bit	7	6	5	4	3	2	1	0
	—	ADSTARTE	SCANMD	ADIE	—	—	—	TRGMD[0]
Value after reset	0	0	0	0	0	0	0	0
R/W	R	R/W	R/W	R/W	R	R	R	R/W

Table 30.44 ADCDnSGCRx Register Contents (x = 0 to 2)

Bit Position	Bit Name	Function
7	Reserved	When read, the value after reset is read. When writing, write the value after reset.
6	ADSTARTE	Scan Group Synchronization Start Enable 0: ADSTART is disabled. 1: ADSTART is enabled.
5	SCANMD	Scan Mode 0: Multicycle scan mode 1: Continuous scan mode In multicycle scan mode, scans are repeated as many times as specified in ADCDnSGMCYCRx. In continuous scan mode, scans are repeated with no limit of times.
4	ADIE	Scan End Interrupt Enable 0: INTADCDnIx is not output at the end of scan for SGx. 1: INTADCDnIx is output at the end of scan for SGx. ADIE of ADCDnSGCRx is independent of ADIE of ADCDnVCRj. For details, see **Section 30.4.5.1, Scan End Interrupt Request**.
3 to 1	Reserved	When read, the value after reset is read. When writing, write the value after reset.
0	TRGMD[0]	Enables or disables trigger input to San Group x

- x = 0

TRGMD[0]	Hardware trigger Trigger input to SGx	Software trigger Trigger input to SGx
0	Disabled	Enabled
1	Enabled	Enabled

- x = 1, 2

TRGMD[0]	Hardware trigger		Software trigger	
	Trigger input to SGx	Hold trigger to SGx	Trigger input to SGx	Hold trigger to SGx
0	Disabled	Disabled	Enabled	Disabled
1	Enabled	Enabled	Enabled	Enabled

- When x = 3, 4

Bit	7	6	5	4	3	2	1	0
	ADTSTARTE	ADSTARTE	SCANMD	ADIE	—	—	TRGMD[1:0]	
Value after reset	0	0	0	0	0	0	0	0
R/W	R/W	R/W	R/W	R/W	R	R	R/W	R/W

Table 30.45 ADCDnSGCRx Register Contents (x = 3, 4)

Bit Position	Bit Name	Function
7	ADTSTARTE	AD Timer Synchronization Start Enable 0: ADTSTART is disabled. 1: ADTSTART is enabled.
6	ADSTARTE	Scan Group Synchronization Start Enable 0: ADSTART is disabled. 1: ADSTART is enabled.
5	SCANMD	Scan Mode 0: Multicycle scan mode 1: Continuous scan mode In multicycle scan mode, scans are repeated as many times as specified in ADCDnSGMCYCRx. In continuous scan mode, scans are repeated unlimited of times.
4	ADIE	Scan End Interrupt Enable 0: INTADCDnIx is not output at the end of scan for SGx. 1: INTADCDnIx is output at the end of scan for SGx. ADIE of ADCDnSGCRx is independent of ADIE of ADCDnVCRj. For details, see **Section 30.4.5.1, Scan End Interrupt Request**.
3, 2	Reserved	When read, the value after reset is read. When writing, write the value after reset.
1, 0	TRGMD[1:0]	Enables or disables trigger input to Scan Group x.

TRGMD [1:0]	Hardware trigger			Software trigger		
	Trigger input to SGx	Trigger input to timer x	Hold trigger to SGx	Trigger input to SGx	Trigger input to timer x	Hold trigger to SGx
0	Disabled	Disabled	Disabled	Enabled	Disabled	Disabled
1	Enabled	Disabled	Enabled	Enabled	Disabled	Enabled
2	Disabled	Disabled	Disabled	Enabled	Enabled	Disabled
3	Disabled	Enabled	Disabled	Enabled	Enabled	Disabled

CAUTIONS

1. To prevent malfunctions, make settings for SCANMD and ADIE of ADCDnSGCRx after making or confirming the following settings.
   (1) HLDTE of the T&H group A is 0 when scan group x is selected in SGS[1:0] of the T&H group A.
   (2) HLDTE of the T&H group B is 0 when scan group x is selected in SGS[1:0] of the T&H group B.
   (3) ADSTARTE of scan group x is 0 and TRGMD of scan group x is 0_H.
   (4) SGACT of scan group x is 0 (before the scan group is started).
2. If a trigger of lower-priority scan group is input to a scan group for which continuous scan mode is set (SCANMD = 1_H), the trigger is not accepted. Therefore, it is assumed that continuous scan mode is set to scan group 0.

30.3.38 ADCDnSGVCSPx — Scan Group x Start Virtual Channel Pointer

ADCDnSGVCSPx is an 8-bit readable/writable register that specifies the start pointer of a virtual channel of scan group x.

Access: This register can be read/written in 8-bit units.

Address: ADCDnSGVCSP0: <ADCDn_base> + 494_H
ADCDnSGVCSP1: <ADCDn_base> + 514_H
ADCDnSGVCSP2: <ADCDn_base> + 594_H
ADCDnSGVCSP3: <ADCDn_base> + 614_H
ADCDnSGVCSP4: <ADCDn_base> + 694_H

Value after reset: 00_H

Bit	7	6	5	4	3	2	1	0
	—	—	VCSP[5:0]					
Value after reset	0	0	0	0	0	0	0	0
R/W	R	R	R/W	R/W	R/W	R/W	R/W	R/W

Table 30.46 ADCDnSGVCSPx Register Contents

Bit Position	Bit Name	Function
7, 6	Reserved	When read, the value after reset is read. When writing, write the value after reset.
5 to 0	VCSP[5:0]	Start Virtual Channel Pointer These bits select the virtual channel from which the scan is to be started. When SGx is started, processing for the virtual channels from ADCDnSGVCSPx to ADCDnSGVCEPx is executed.

CAUTIONS

1. ADCDnSGVCSPx must be equal to or smaller than ADCDnSGVCEPx.
2. To prevent malfunctions, make ADCDnSGVCSPx settings after making or confirming the following settings.
   (1) HLDTE of the T&H group A is 0 when scan group x is selected in SGS[1:0] of the T&H group A.
   (2) HLDTE of the T&H group B is 0 when scan group x is selected in SGS[1:0] of the T&H group B.
   (3) ADSTARTE of scan group x is 0 and TRGMD of scan group x is 0_H.
   (4) SGACT of scan group x is 0 (before the scan group is started).
3. Do not set a value greater than the number of virtual channels provided.

30.3.39 ADCDnSGVCEPx — Scan Group x End Virtual Channel Pointer

ADCDnSGVCEPx is an 8-bit readable/writable register that specifies the end pointer of a virtual of scan group x.

Access: This register can be read/written in 8-bit units.

Address: ADCDnSGVCEP0: <ADCDn_base> + 498_H
ADCDnSGVCEP1: <ADCDn_base> + 518_H
ADCDnSGVCEP2: <ADCDn_base> + 598_H
ADCDnSGVCEP3: <ADCDn_base> + 618_H
ADCDnSGVCEP4: <ADCDn_base> + 698_H

Value after reset: 00_H

Bit	7	6	5	4	3	2	1	0
	—	—	VCEP[5:0]					
Value after reset	0	0	0	0	0	0	0	0
R/W	R	R	R/W	R/W	R/W	R/W	R/W	R/W

Table 30.47 ADCDnSGVCEPx Register Contents

Bit Position	Bit Name	Function
7, 6	Reserved	When read, the value after reset is read. When writing, write the value after reset.
5 to 0	VCEP[5:0]	End Virtual Channel Pointer These bits select the virtual channel to which the scan is to be ended. When SGx is started, processing for the virtual channels from ADCDnSGVCSPx to ADCDnSGVCEPx is executed.

CAUTION

To prevent malfunctions, make ADCDnSGVCEPx settings after making or confirming the following settings.

(1) HLDTE of the T&H group A is 0 when scan group x is selected in SGS[1:0] of the T&H group A.
(2) HLDTE of the T&H group B is 0 when scan group x is selected in SGS[1:0] of the T&H group B.
(3) ADSTARTE of scan group x is 0 and TRGMD of scan group x is 0_H.
(4) SGACT of scan group x is 0 (before the scan group is started).

30.3.40 ADCDnSGMCYCRx — Scan Group x Multicycle Register

ADCDnSGMCYCRx is an 8-bit readable/writable register that specifies the number of scan times in multicycle scan mode for scan group x.

Access: This register can be read/written in 8-bit units.

Address: ADCDnSGMCYCR0: <ADCDn_base> + $49C_H$
ADCDnSGMCYCR1: <ADCDn_base> + $51C_H$
ADCDnSGMCYCR2: <ADCDn_base> + $59C_H$
ADCDnSGMCYCR3: <ADCDn_base> + $61C_H$
ADCDnSGMCYCR4: <ADCDn_base> + $69C_H$

Value after reset: 00_H

Bit	7	6	5	4	3	2	1	0
	MCYC[7:0]							
Value after reset	0	0	0	0	0	0	0	0
R/W	R/W	R/W	R/W	R/W	R/W	R/W	R/W	R/W

Table 30.48 ADCDnSGMCYCRx Register Contents

Bit Position	Bit Name	Function
7 to 0	MCYC[7:0]	Multicycle These bits specify the number of scan times in multicycle scan mode Number of scan times = MCYC[7:0] + 1 When SGx is started, scans are repeated for virtual channels from ADCDnSGVCSPx to ADCDnSGVCEPx as many times as specified in ADCDnSGMCYCRx.

CAUTION

To prevent malfunctions, make ADCDnSGMCYCRx settings after making or confirming the following settings.

(1) HLDTE of the T&H group A is 0 when scan group x is selected in SGS[1:0] of the T&H group A.

(2) HLDTE of the T&H group B is 0 when scan group x is selected in SGS[1:0] of the T&H group B.

(3) ADSTARTE of scan group x is 0 and TRGMD of scan group x is 0_H.

(4) SGACT of scan group x is 0 (before the scan group is started).

30.3.41 ADCDnSGSRx — Scan Group x Status Register

ADCDnSGSRx is an 8-bit read-only register that indicates the status of scan group x.

Access: This register can be read only in 8-bit units.

Address: ADCDnSGSR0: <ADCDn_base> + $4A4_H$
ADCDnSGSR1: <ADCDn_base> + 524_H
ADCDnSGSR2: <ADCDn_base> + $5A4_H$
ADCDnSGSR3: <ADCDn_base> + 624_H
ADCDnSGSR4: <ADCDn_base> + $6A4_H$

Value after reset: 00_H

- x = 0 to 2

Bit	7	6	5	4	3	2	1	0
	—	—	—	—	—	—	SGACT	—
Value after reset	0	0	0	0	0	0	0	0
R/W	R	R	R	R	R	R	R	R

Table 30.49 ADCDnSGSRx Register Contents (x = 0 to 2)

Bit Position	Bit Name	Function
7 to 2	Reserved	When read, the value after reset is read. When writing, write the value after reset.
1	SGACT	Scan Group Status 0: A/D converter for conversion of SGx is in idle state. 1: A/D conversion for SGx is in progress.
0	Reserved	When read, the value after reset is read. When writing, write the value after reset.

- x = 3, 4

Bit	7	6	5	4	3	2	1	0
	—	—	—	—	—	ADTACT	SGACT	—
Value after reset	0	0	0	0	0	0	0	0
R/W	R	R	R	R	R	R	R	R

Table 30.50 ADCDnSGSRx Register Contents (x = 3, 4)

Bit Position	Bit Name	Function
7 to 3	Reserved	When read, the value after reset is read. When writing, write the value after reset.
2	ADTACT	A/D Timer Status 0: A/D timer x is in idle state. 1: A/D timer x is running
1	SGACT	Scan Group Status 0: There is no source in SGx. 1: There is a source in SGx.
0	Reserved	When read, the value after reset is read. When writing, write the value after reset.

30.3.42 ADCDnADTIPRy — AD Timer Initial Phase Register y

ADCDnADTIPRy is a 32-bit readable/writable register that sets the initial phase of A/D timer y.

Access: This register can be read/written in 32-bit units.

Address: ADCDnADTIPR3: <ADCDn_base> + 628_H
ADCDnADTIPR4: <ADCDn_base> + $6A8_H$

Value after reset: $0000\ 0000_H$

Bit	31	30	29	28	27	26	25	24	23	22	21	20	19	18	17	16
	—	—	—	—	—	—	—	—	—	—	—	ADTIP[20:16]				
Value after reset	0	0	0	0	0	0	0	0	0	0	0	0	0	0	0	0
R/W	R	R	R	R	R	R	R	R	R	R	R	R/W	R/W	R/W	R/W	R/W

Bit	15	14	13	12	11	10	9	8	7	6	5	4	3	2	1	0
	ADTIP[15:0]															
Value after reset	0	0	0	0	0	0	0	0	0	0	0	0	0	0	0	0
R/W	R/W	R/W	R/W	R/W	R/W	R/W	R/W	R/W	R/W	R/W	R/W	R/W	R/W	R/W	R/W	R/W

Table 30.51 ADCDnADTIPRy Register Contents

Bit Position	Bit Name	Function
31 to 21	Reserved	When read, the value after reset is read. When writing, write the value after reset.
20 to 0	ADTIP[20:0]	A/D Timer Initial Phase These bits set the initial phase of A/D timer y. For details, see **Section 30.4.2.3, Starting A/D Timer by Using a Hardware Trigger**.

CAUTION

To prevent malfunctions, make ADCDnADTIPRy settings when ADTACT of scan group y is 0 (before A/D timer is started), ADTSTARTE of scan group y is 0, and TRGMD[1:0] of scan group y is not 3_H.

30.3.43 ADCDnADTPRRy — AD Timer Period Register y

ADCDnADTPRRy is a 32-bit readable/writable register that sets the cycle of A/D timer y.

Access: This register can be read/written in 32-bit units.

Address: ADCDnADTPRR3: <ADCDn_base> + $62C_H$
ADCDnADTPRR4: <ADCDn_base> + $6AC_H$

Value after reset: 001F $FFFF_H$

Bit	31	30	29	28	27	26	25	24	23	22	21	20	19	18	17	16
	—	—	—	—	—	—	—	—	—	—	—	ADTPR[20:16]				
Value after reset	0	0	0	0	0	0	0	0	0	0	0	1	1	1	1	1
R/W	R	R	R	R	R	R	R	R	R	R	R	R/W	R/W	R/W	R/W	R/W

Bit	15	14	13	12	11	10	9	8	7	6	5	4	3	2	1	0
	ADTPR[15:0]															
Value after reset	1	1	1	1	1	1	1	1	1	1	1	1	1	1	1	1
R/W	R/W	R/W	R/W	R/W	R/W	R/W	R/W	R/W	R/W	R/W	R/W	R/W	R/W	R/W	R/W	R/W

Table 30.52 ADCDnADTPRRy Register Contents

Bit Position	Bit Name	Function
31 to 21	Reserved	When read, the value after reset is read. When writing, write the value after reset.
20 to 0	ADTPR[20:0]	A/D Timer Cycle These bits set the cycle of A/D timer y. For details, see **Section 30.4.2.3, Starting A/D Timer by Using a Hardware Trigger**.

CAUTION

To prevent malfunctions, make ADCDnADTPRRy settings when ADTACT of scan group y is 0 (before A/D timer is started), ADTSTARTE of scan group y is 0, and TRGMD[1:0] of scan group y is not 3_H.

30.3.44 ADCDnULLMSRx — Scan Group x Upper-limit/Lower-limit Table Select Register

ADCDnULLMSRx is an 8-bit readable/writable register that controls scan group x.

Access: This register can be read/written in 8-bit units.

Address: ADCDnULLMSR0: <ADCDn_base> + $4B0_H$
ADCDnULLMSR1: <ADCDn_base> + 530_H
ADCDnULLMSR2: <ADCDn_base> + $5B0_H$
ADCDnULLMSR3: <ADCDn_base> + 630_H
ADCDnULLMSR4: <ADCDn_base> + $6B0_H$

Value after reset: 00_H

Bit	7	6	5	4	3	2	1	0
	—	—	—	—	—	—	ULS[1:0]	
Value after reset	0	0	0	0	0	0	0	0
R/W	R	R	R	R	R	R	R/W	R/W

Table 30.53 ADCDnULLMSRx Register Contents

Bit Position	Bit Name	Function
7 to 2	Reserved	When read, the value after reset is read. When writing, write the value after reset.
1, 0	ULS	Upper Limit/Lower Limit Table Select 0_H: Neither upper limit nor lower limit is checked. 1_H: Upper limit and lower limit are checked in ADCDnULLMTBR0. 2_H: Upper limit and lower limit are checked in ADCDnULLMTBR1. 3_H: Upper limit and lower limit are checked in ADCDnULLMTBR2. Upper limit and lower limit are checked by using the upper limit/lower limit table selected by ULS[1:0] when storing the A/D converted value in ADCDnDRj.

CAUTION

To prevent malfunctions, make ADCDnULLMSRx settings after making or confirming the following settings.

(1) HLDTE of the T&H group A is 0 when scan group x is selected in SGS[1:0] of the T&H group A.

(2) HLDTE of the T&H group B is 0 when scan group x is selected in SGS[1:0] of the T&H group B.

(3) ADSTARTE of scan group x is 0 and TRGMD of scan group x is 0_H.

(4) SGACT of scan group x is 0 (before the scan group is started).

30.4 Function

30.4.1 A/D Conversion Function

A/D Conversion is performed in scan group units. All scan groups have A/D conversion trigger signals. When a trigger signal (SGx_TRG) is input, the signals on the virtual channels assigned to the scan group are A/D converted in ascending order. An A/D complete interrupt (INTADCDnIx) is generated on completion of A/D conversion for each virtual channel or for all virtual channels assigned to a scan group.

In multi-scan mode, A/D conversion is repeated the specified number of times in response to the input of a trigger signal. In continuous scan mode, A/D conversion is repeated until it is stopped. The A/D conversion data format can be selected between signed fixed-point format and signed integer format. For bit sequence for the data formats, see **Section 30.3.5, ADCDnDRj — Data Register j**.

30.4.1.1 Example of Multicycle Scan Mode Operation

The following figure shows an example of operation when converting four virtual channels by scanning twice for scan group 0 in multicycle scan mode by using normal A/D conversion mode (CNVCLS[2:0] = 0_H).

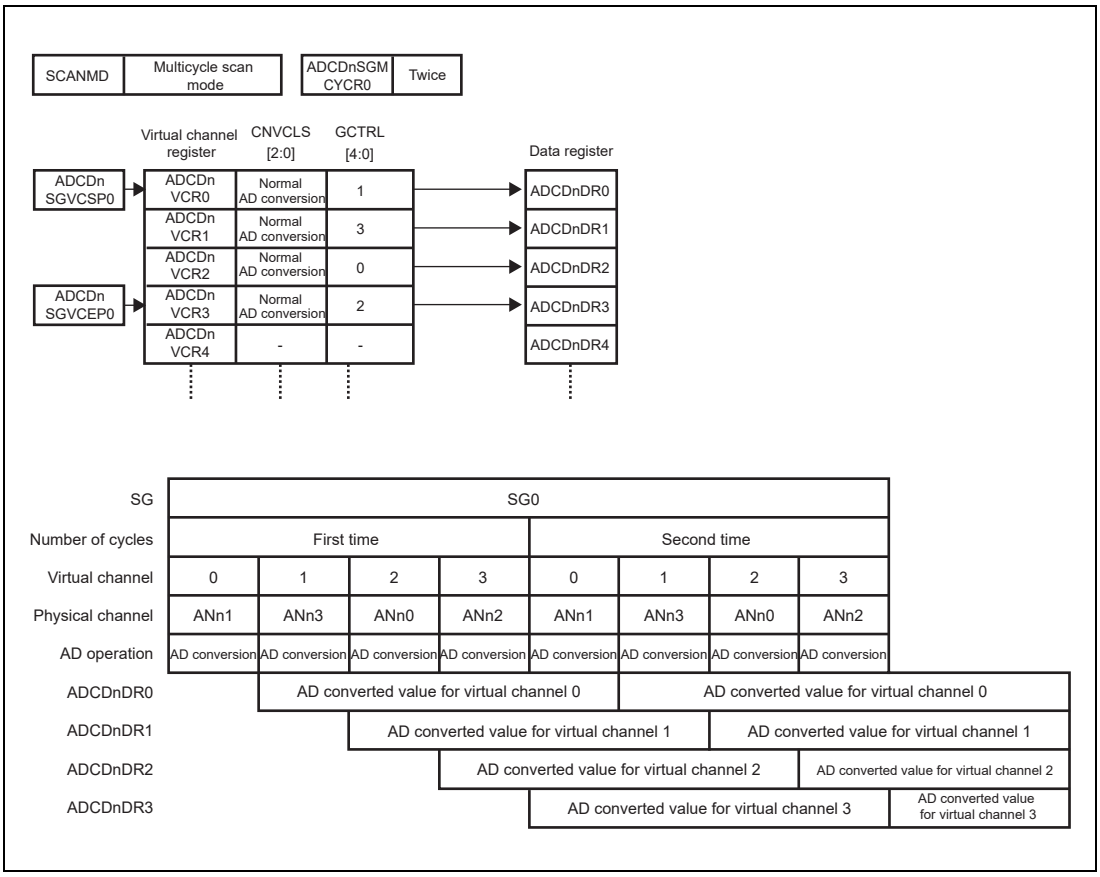

Figure 30.4 Example of Operation in Multicycle Scan Mode

30.4.1.2 Example of Continuous Scan Mode Operation

Figure 30.5 shows an example of operation when converting four virtual channels for scan group 0 in continuous scan mode by using normal A/D conversion mode (CNVCLS[2:0] = 0_H).

In this mode, if a trigger of a lower-priority scan group is input to a scan group for which continuous scan mode is set (SCANMD = 1_H), the trigger is not accepted. Therefore, it is assumed that continuous scan mode is set for scan group 0.

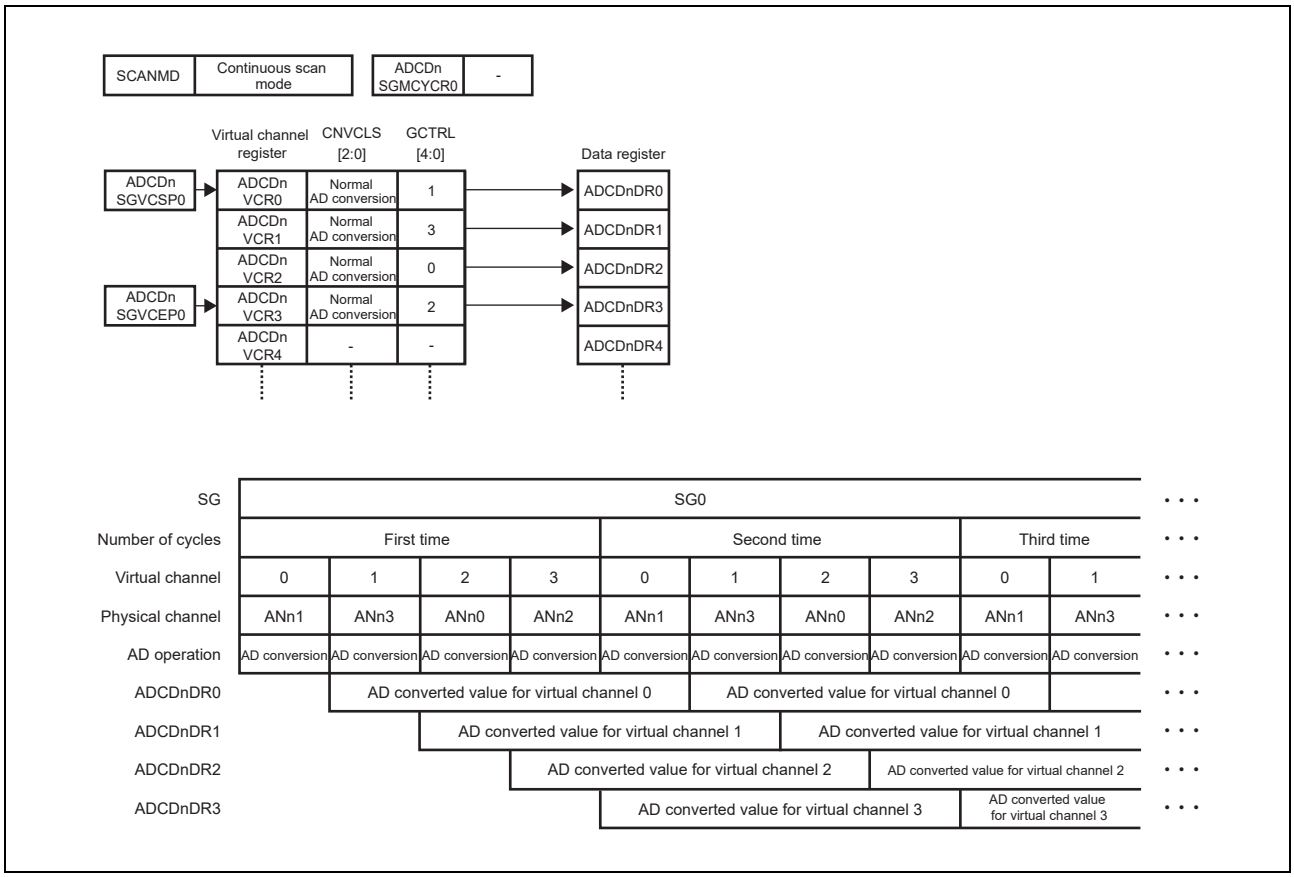

Figure 30.5 Example of Operation in Continuous Scan Mode

30.4.1.3 Simultaneous Track and Hold Operation (THC Control)

The following figure shows an example of simultaneous track and hold operation with T&H control, A/D conversion of the held value (CNVCLS[2:0] = 1_H), self-diagnosis (CNVCLS[2:0] = 3_H), and normal A/D conversion in addition mode (CNVCLS[2:0] = 4_H).

If a hold trigger is input from T&H group A or B, on-going conversion of the virtual channel is suspended regardless of the priority of the scan group and the hold operation is started. When the hold operation is completed, the virtual channel operation is executed in order of priority of the scan groups. The virtual channel suspended by the hold trigger is restarted from the beginning.

The following figures (**Figure 30.6**, **Figure 30.7**, **Figure 30.8**, and **Figure 30.9**) show the operations when a hold trigger is generated during A/D conversion.

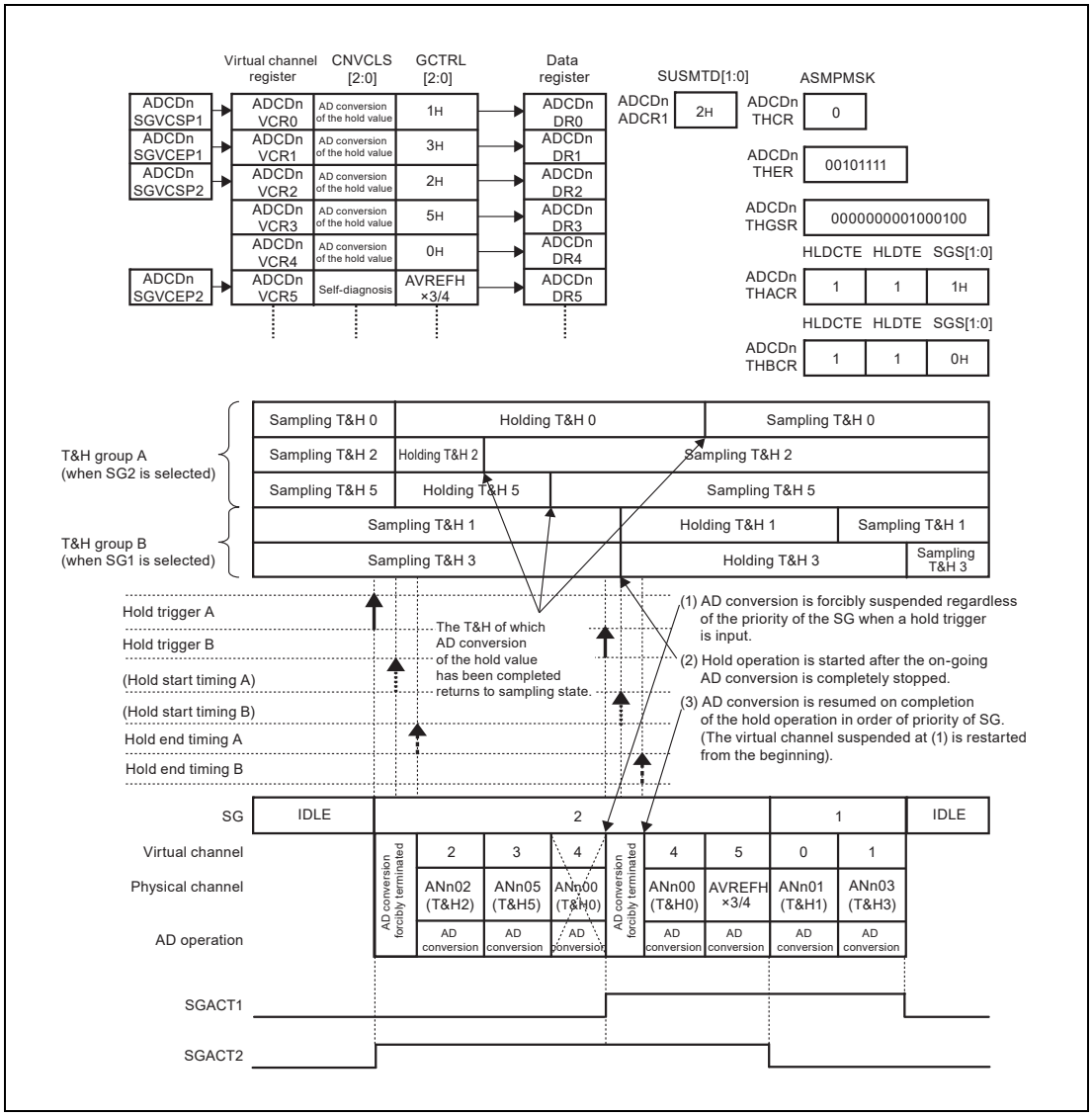

Figure 30.6 Simultaneous Track and Hold Operation (Interrupted by T&H Conversion of Low-priority SG (SG1) During T&H Conversion of the High-priority SG (SG2))

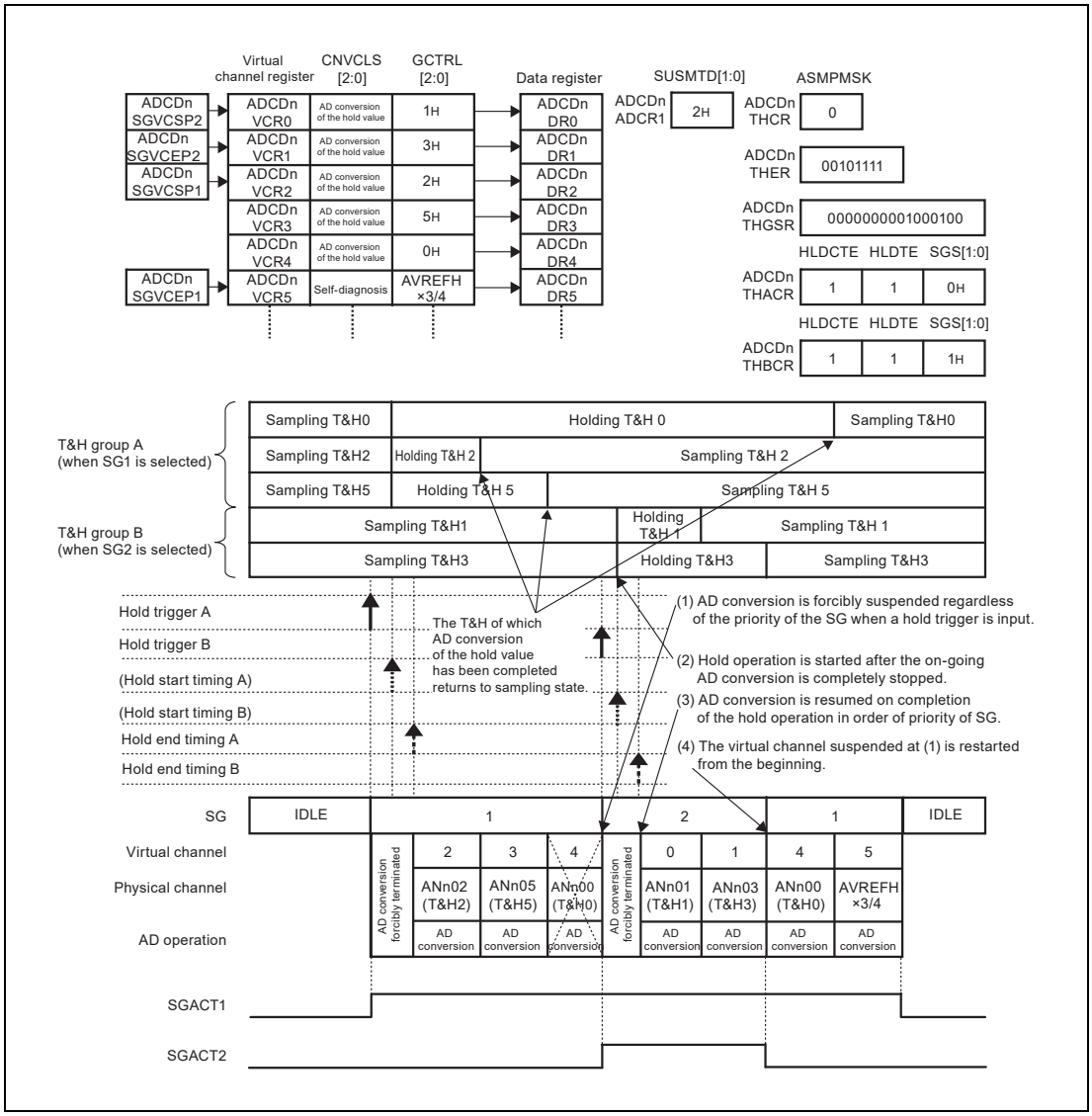

Figure 30.7 Simultaneous Track and Hold Operation (Interrupted by T&H Conversion of High-Priority SG (SG2) During T&H Conversion of Low-Priority SG (SG1))

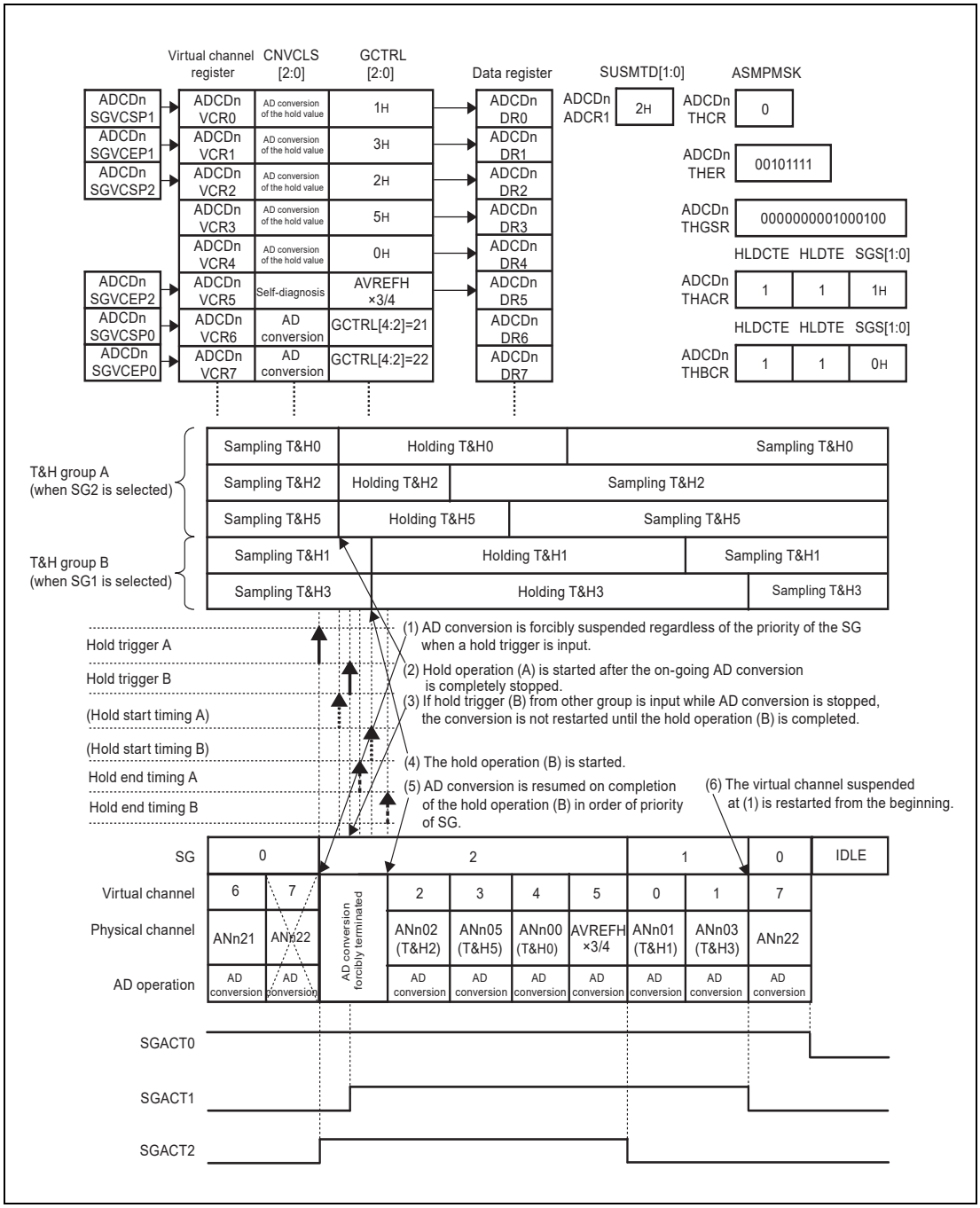

Figure 30.8 Simultaneous Track and Hold Operation (Interrupted by T&H Conversions of High-priority SG (SG1 and SG2) During Normal Conversion of Low-priority SG (SG0))

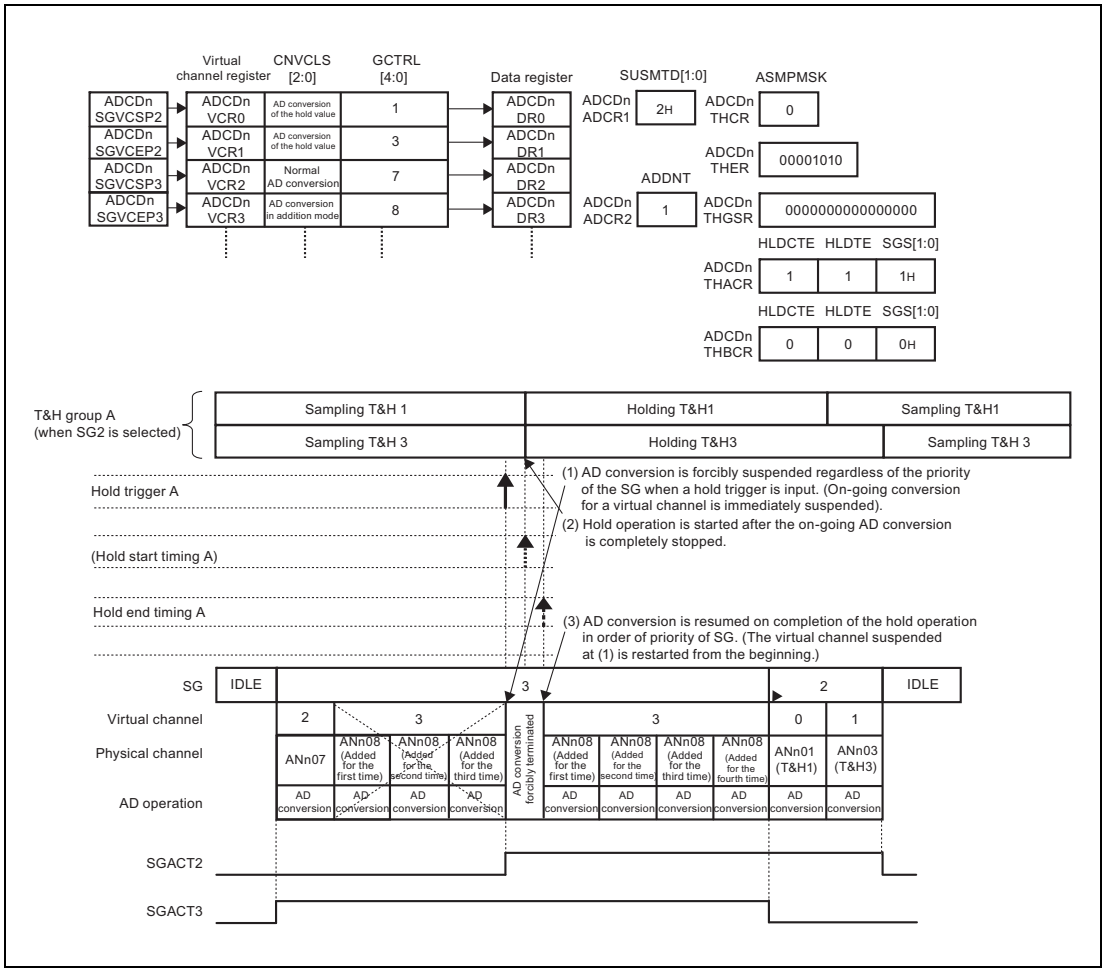

Figure 30.9 Simultaneous Track and Hold Operation (Interrupted by T&H Conversion of Low-priority SG (SG2) During Normal Addition Conversion of High-priority SG (SG3))

30.4.1.4 Example of Normal A/D Conversion Operation in Addition Mode

Figure 30.10 shows an example of operation when converting four virtual channels for scan group 0 by using normal A/D conversion (CNVCLS[2:0] = 4_H) in addition mode.

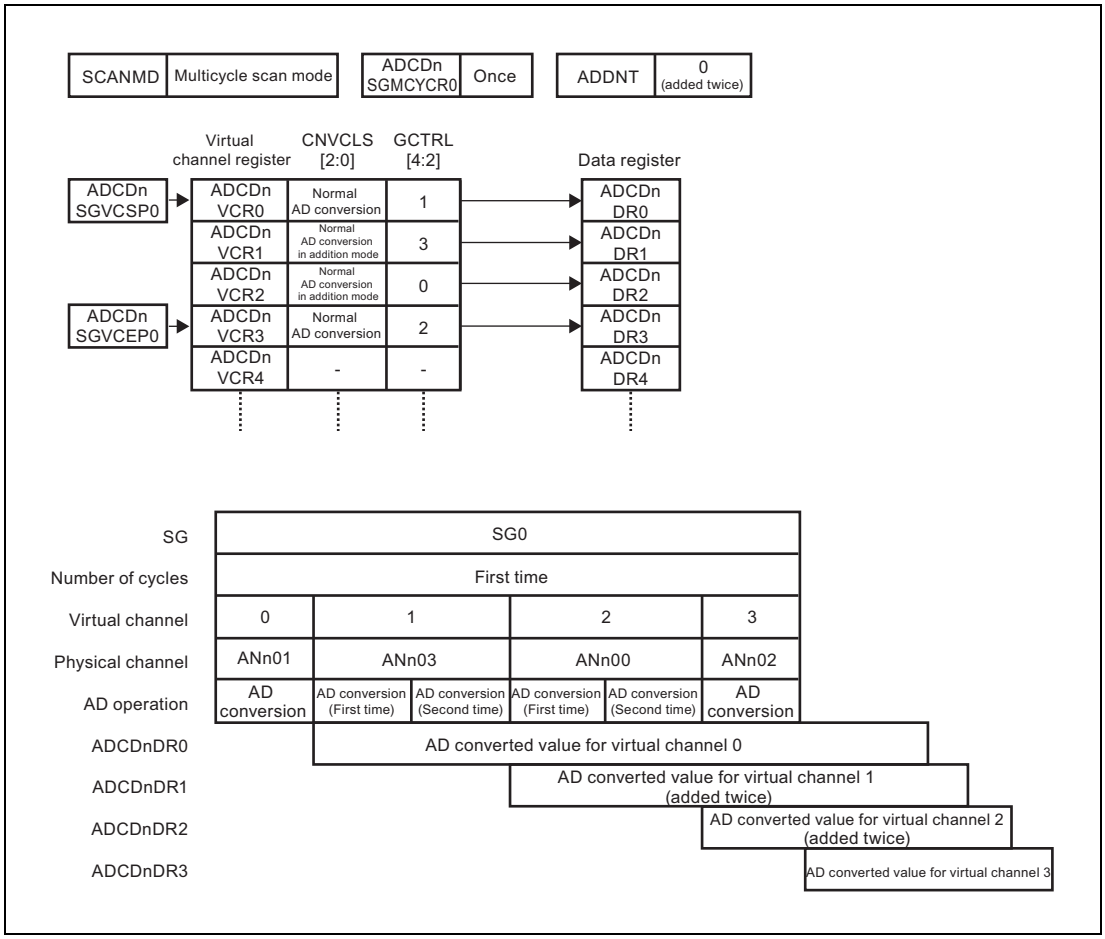

Figure 30.10 Example of Normal A/D Conversion Operation in Addition Mode

30.4.1.5 Example of Using an External Analog Multiplexer (Port Output)

Figure 30.11 shows an example of port output using an external analog multiplexer.

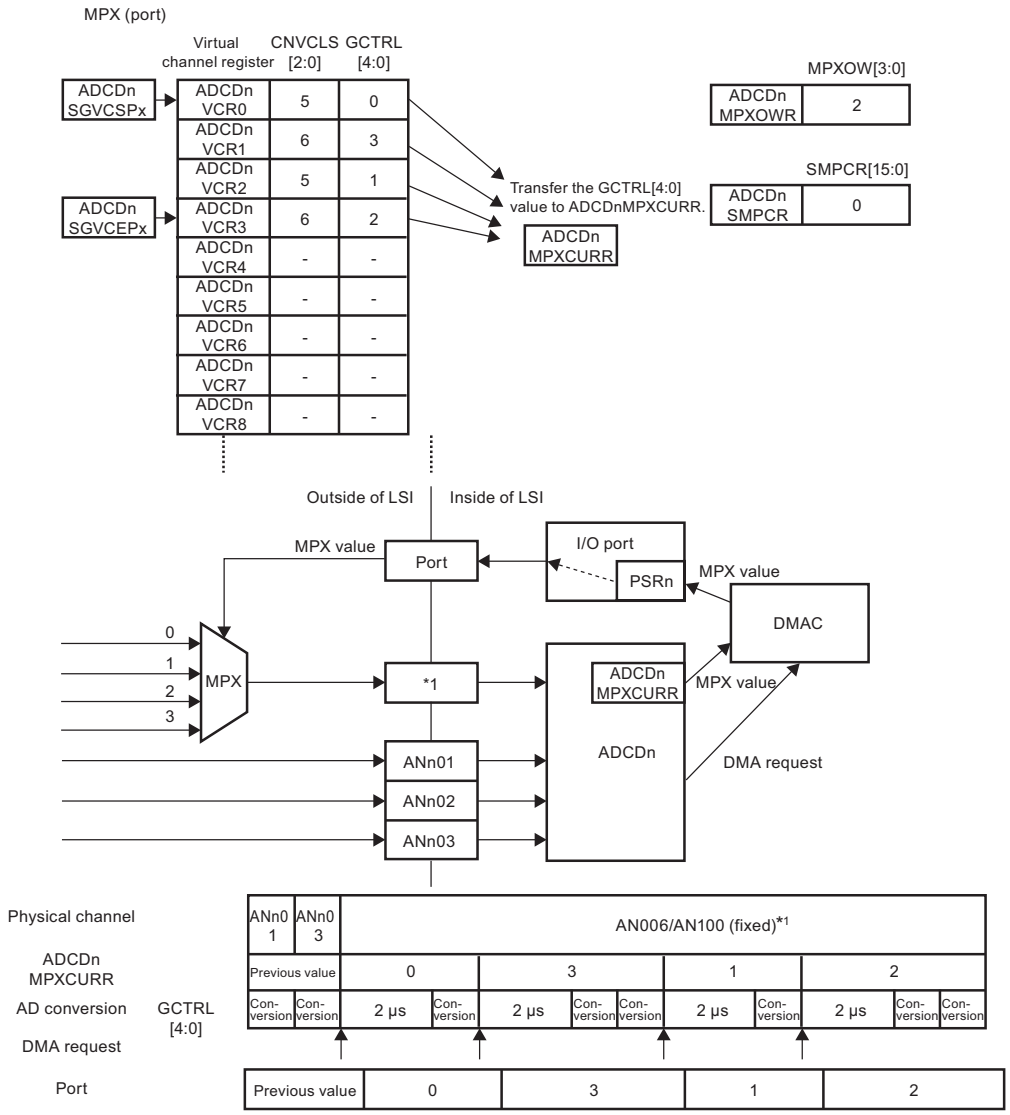

Note 1. The external analog multiplexer is fixed: AN006 for ADCD0 and AN100 for ADCD1.

Note 2. When an external multiplexer is used for multiple scan groups
When an external multiplexer is used with SUSMTD[1:0] set to 1_H or 2_H, observe the following notes.
For the start virtual channel of each scan group, make a setting so as not to use an external multiplexer.
(However, for the start virtual channel of the scan group whose priority is lowest among the scan groups for which the external multiplexer is used, a setting to use an external multiplexer does not cause any problem.)

Figure 30.11 Example of Using an External Analog Multiplexer (Port Output)

30.4.2 Trigger Function

The following triggers are selectable as an A/D conversion start trigger of each scan group.

• Hardware trigger (SGx_TRG)

• AD timer

• Software trigger (by setting the ADCDnSGSTCRx)

The following triggers are selectable for activating A/D timer.

• Hardware trigger (SGx_TRG)

• Software trigger (by setting the ADCDnADTSTCRy)

When an A/D conversion trigger is generated for the same scan group with the one on which A/D conversion is in progress, the trigger is disabled.

When an A/D conversion trigger is generated for a scan group with the priority level lower than the one on which A/D conversion is in progress, the trigger is suspended. A/D conversion for the respective group is started on completion of A/D conversion for the scan group with higher priority level.

When an A/D conversion trigger is generated for the scan group with the priority level higher than the one on which A/D conversion is in progress, see **Section 30.4.3, Suspend Function**.

30.4.2.1 Starting a Scan Group by Using a Hardware Trigger

Scan group x can be started by using an input from hardware trigger SGx_TRG. To start scan group x by an input from hardware trigger SGx_TRG, set TRGMD in ADCDnSGCRx to 1_H. When the selected hardware trigger SGx_TRG is input in this state, SGACT is set to 1. The timing since SGACT is set to 1 until scan group x is started is the same as the timing when SGST is set to 1 by a software trigger.

30.4.2.2 Starting a Scan Group by Using an A/D Timer Trigger

Scan group 3 or 4 can be started by using a trigger from A/D timer 3 or 4. To start scan group 3 or 4 by using a trigger from A/D timer 3 or 4, set TRGMD in ADCDnSGCR3 or ADCDnSGCR4 to 2_H. Furthermore, set ADTST of scan group 3 or 4 to 1 to start A/D timer 3 or 4.

When a timer trigger is input in this state, SGACT is set to 1. The timing since SGACT is set to 1 until scan group 3 or 4 is started is the same as the timing when SGST is set to 1 by a software trigger.

30.4.2.3 Starting A/D Timer by Using a Hardware Trigger

A/D timer 3 or 4 can be started by using a hardware trigger SG3_TRG or SG4_TRG input. To start A/D timer 3 or 4 by using a hardware trigger SG3_TRG or SG4_TRG input, set TRGMD in ADCDnSGCR3 or ADCDnSGCR4 to 3H. When the selected external trigger is input in this state, A/D timer 3 or 4 starts. Furthermore, a trigger from A/D timer 3 or 4 starts scan group 3 or 4.

Figure 30.12 shows an example of A/D timer operation.

The A/D timer counts in synchronization with the CLK_ADC clock.

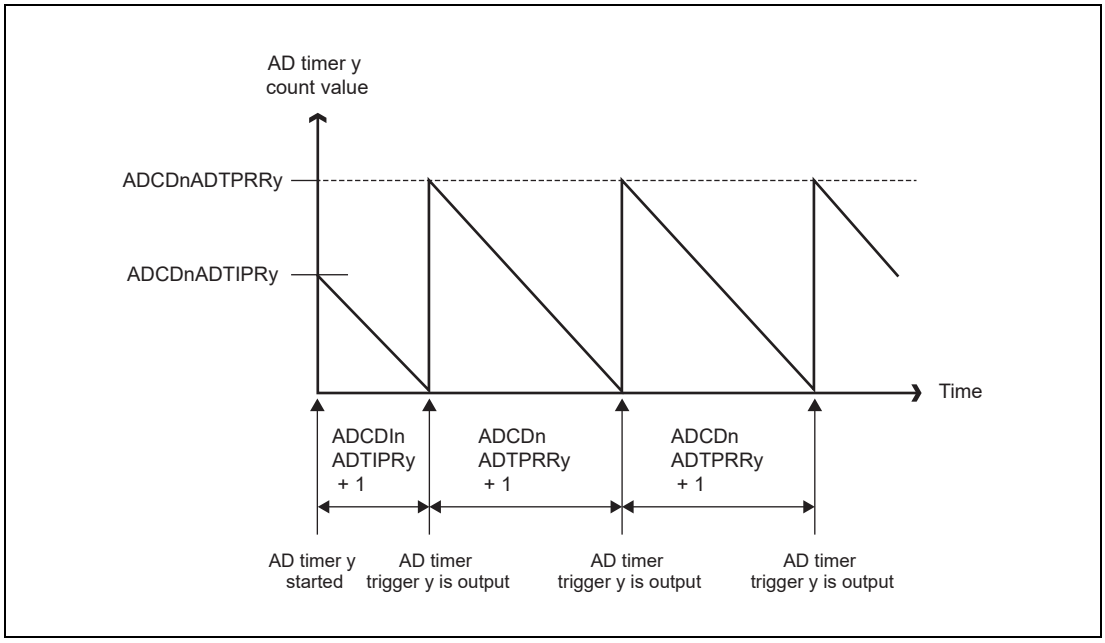

Figure 30.12 Example of A/D Timer Operation

(1) A/D timer y is loaded with ADCDnADTIPRy at the start of counting.

(2) If the A/D timer y is 0, an A/D timer trigger is output for one cycle and the A/D timer y is loaded with ADCDnADTPRRy.

If the A/D timer y is not 0, the timer counts down. After that, (2) is repeated.

CAUTION

If 0 is set to the A/D timer initial phase register y (ADCDnADTIPRy), an A/D timer trigger is output simultaneously with the start of the A/D timer.

If 0 is set to the A/D timer period register y (ADCDnADTPRRy), an A/D timer trigger is output at each clock cycle.

30.4.3 Suspend Function

In suspend function, when a scan group request with higher priority is issued during lower-priority scan group processing, A/D conversion of the lower priority level is suspended and A/D conversion with higher priority level is performed. There are three types in the suspend operation.

30.4.3.1 Synchronous Suspend and Resume Operation

When the A/D conversion trigger is generated for a scan group with higher priority than one on which A/D conversion is in progress, A/D conversion for the scan group with higher priority does not proceed until A/D conversion of the virtual channel for which conversion was in progress is completed. A/D conversion for the group is resumed on completion of A/D conversion for the scan group with higher priority.

Figure 30.13 shows an example of synchronous suspend and resume operation when a higher-priority SG interrupts a lower-priority SG.

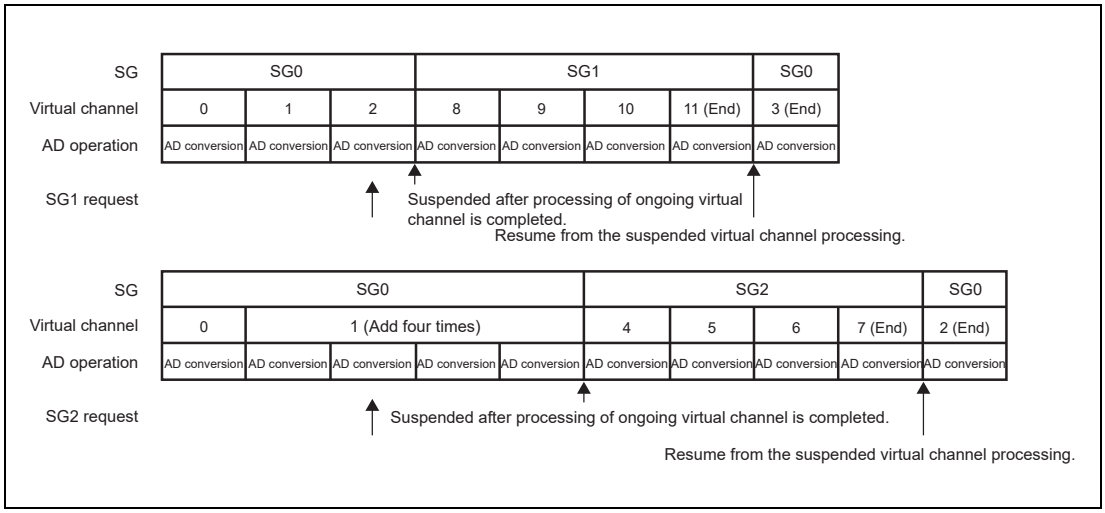

Figure 30.13 Example of Synchronous Suspend and Resume Operation

NOTE

Priority of scan groups:

Low High

SG0 < SG1 < SG2 < SG3 < SG4

30.4.3.2 Example of Asynchronous Suspend and Resume Operation

When the A/D conversion trigger is generated for a scan group with higher priority than one on which A/D conversion is in progress, A/D conversion of the virtual channel for which conversion was in progress is suspended immediately and A/D conversion for the scan group with higher priority proceeds. A/D conversion for the group is resumed on completion of A/D conversion for the scan group with higher priority.

Figure 30.14 shows an example of asynchronous suspend and resume operation when a higher-priority SG interrupts a lower-priority SG.

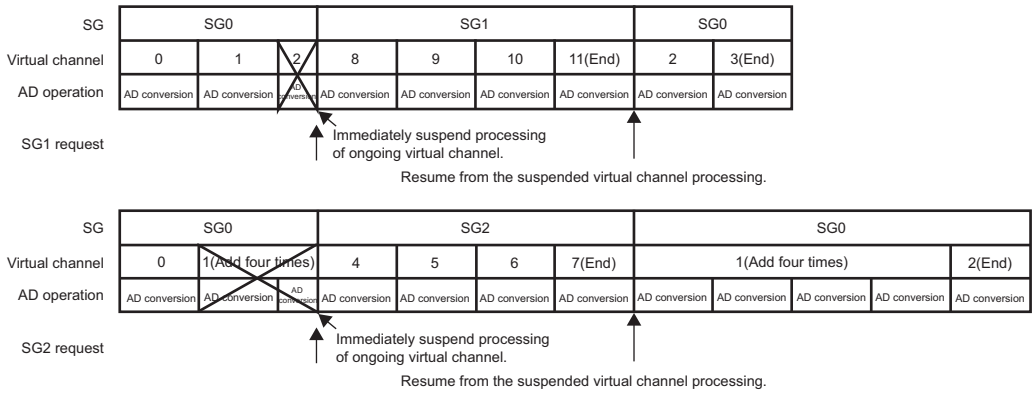

Figure 30.14 Example of Asynchronous Suspend and Resume Operation

NOTE

Priority of scan groups:

Low High

SG0 < SG1 < SG2 < SG3 < SG4

30.4.3.3 Example of Mixed (Synchronous/Asynchronous) Suspend Operation

When the A/D conversion trigger is generated for a scan group with higher priority than scan group 0 on which A/D conversion is in progress, the conversion in progress is asynchronously suspended. When the A/D conversion trigger is generated for a scan group with higher priority than a group other than scan group 0 on which A/D conversion is in progress, the conversion in progress is synchronously is suspended. A/D conversion for the respective groups is resumed on completion of A/D conversion for the scan groups with higher priority.

30.4.4 Self-Diagnostic Function

The ADCD is equipped with the following self-diagnostic functions.

- Pin level self-diagnostic function
- A/D conversion circuit self-diagnostic function
- Wiring-break detection function

30.4.4.1 Pin Level Self-Diagnostic Function

Figure 30.15 is a flowchart of pin-level self-diagnosis.

The pin-level self-diagnosis flowchart below illustrates an example where pin-level self-diagnosis proceeds after assigning all ADCD0 pins to virtual channels and switching the applied voltage to even- and odd-numbered physical channel groups. This flowchart assumes that pin-level self-diagnosis proceeds before the start of A/D conversion.

<Features>

1. Desire physical channels for diagnosis are selectable.
2. The voltage level of pin-level self-diagnosis (AVSS, AVCC, or 1/2 X AVCC) can be selectable for each even- or odd-numbered physical channel.
3. Pin-level self-diagnosis function is available by performing A/D conversion for SG0 to SG4.

<Settings>

1. Make initial settings according to **Figure 30.22, Initial Settings**.
2. In the virtual channel setting register ADCDnVCRj (j = 0 to 23), set normal A/D conversion (CNVCLS[2:0] = 0_H) and set the desired physical channel for pin-level self-diagnosis in GCTRL[5:0].
3. In pin-level self-diagnosis control register ADCDnTDCR, set diagnosis voltage (TDLV[1:0]) and set pin-level self-diagnosis (TDE = 1).
4. Set other necessary settings for A/D conversion according to **Figure 30.22, Initial Settings**.
5. Assert the trigger for SG0 to SG4 and perform A/D conversion.

NOTE

The results of conversion of diagnosis voltage at self-diagnosis include the total errors at self-diagnosis (TESH0SN). For the values of TESH0SN, see **Section 37.15, A/D Convertor Characteristics**.

CAUTION

The accuracy of conversion at a pin-level self-diagnosis is affected by the current injected. For details, see Section 37.15, A/D Convertor Characteristics.

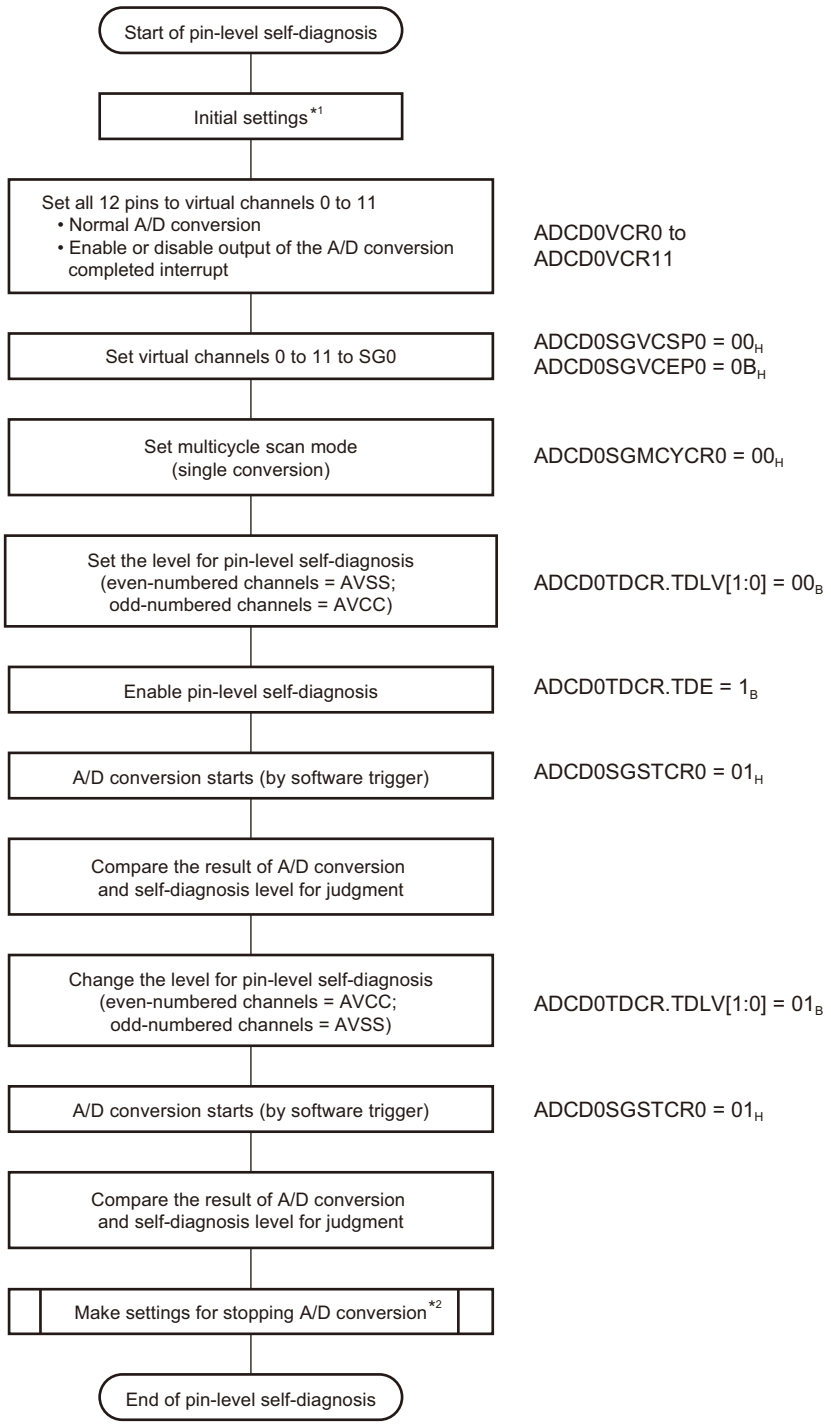

Note 1. See **Section 30.5.1, Initial Settings**.

Note 2. See **Figure 30.24, Flowchart for Stopping A/D Conversion**.

Figure 30.15 Flowchart of Pin-Level Self-Diagnosis (Example of ADCD0 144-pin Package)

30.4.4.2 A/D Conversion Circuit Self-Diagnostic Function

The A/D conversion circuit self-diagnostic function is used to verify that A/D conversion operates correctly.

The voltage value setting is made in GCTRL[5:0] when CNVCLS[2:0] = 3_H, and can be converted for AVREFH×1, AVREFH×3/4, AVREFH×1/2, AVREFH×1/4, and AVSS.

Features and settings of the A/D conversion circuit self-diagnostic function of the ADCD are described below.

[Features]

1. AVREFH×1, AVREFH×3/4, AVREFH×1/2, AVREFH×1/4, or AVSS is selectable as a self-diagnosis voltage level.
2. Performing A/D conversion for SG0 to SG4 makes the A/D conversion circuit self-diagnostic function available.

[Settings]

1. Make settings according to the initial settings (**Figure 30.22, Initial Settings**)
2. Set self-diagnosis mode (CNVCLS[2:0] = 3_H) and optional self-diagnosis voltage level for GCTRL[5:0] in the virtual channel setting register ADCDnVCRj (j = 0 to 23).
3. Make other settings required for A/D conversion according to the initial settings (**Figure 30.22, Initial Settings**).
4. Assert triggers of SG0 to SG4 and perform A/D conversion.

NOTE

The results of conversion of diagnosis voltage at self-diagnosis include the total errors at self-diagnosis (TESH0SN). For the values of TESH0SN, see **Section 37.15, A/D Convertor Characteristics**.

CAUTIONS

1. **Do not use the temperature sensor when A/D conversion circuit self-diagnostic function is used. Set TSN0CR.TSNEN = 0.**
2. **Conversion accuracy of A/D Conversion Circuit Self-Diagnostic Function may have impact by injection current. Please refer to Section 37.15, A/D Convertor Characteristics for the details.**

30.4.4.3 Wiring-Break Detection

Wiring-break detection is a facility for detecting wiring breaks in ANnm. If a wiring break occurs, the result of A/D conversion converges to approximately AnVSS or AnVCC due to pull-down or pull-up resistor. Therefore, wiring-break can be judged from the conversion result.

ADCDn supports two wiring-break detection modes.

- Mode 1: A wiring-break detection for each physical channel can be performed at the same time as normal conversion (wiring-break detection by pull-down resistor).
- Mode 2: A wiring-break detection for each virtual channel by using the function dedicated to wiring-break (wiring-break detection by pull-down or pull-up resistor).

(1) Wiring-break detection mode 1 (ADCDnODCR.ODE = 1)

In wiring-break detection mode 1, the desired width of pull-down pulse (1 to 17 states) can be set and a pull-down resistor is connected for conversion by successive approximation (A pull-up resistor cannot be used in wiring-break detection mode 1). Enabling or disabling of wiring-break detection is set for each analog pin.

[Settings]

1. Make settings in accord with the initial settings (**Figure 30.22, Initial Settings**).
2. In virtual channel register ADCDnVCRj (j = 0 to 23), set normal A/D conversion (CNVCLS[2:0] = 0_H), set a pull-up/-down resistor off (ADCDnVCRj.PDE = 0_H, and ADCDnVCRj.PUE = 0_H), and set the desired channel in GCTRL[5:0].
3. Set wiring-break detection mode 1 (ADCDnODCR.ODE = 1), the physical channel for wiring-break detection (ADOPDIGnm = 1), and the desired width of pull-down pulse in ADCDnODCR.ODPW[5:0].
4. Assert the trigger signal for SG0 to SG4 to start A/D conversion.
5. Repeat A/D conversion several times to check that the voltage of the result of A/D conversion has not been converged to approximately AnVSS.

(2) Wiring-break detection mode 2 (ADCDnODCR.ODE = 0)

In wiring-break detection mode 2, a pull-down or pull-up resistor is connected for sampling of the sample-and-hold circuits when the width of pulse is fixed (18 states). Enabling or disabling of wiring-break detection can be set for each virtual channel.

[Settings]

1. Make settings in accord with the initial settings (**Figure 30.22, Initial Settings**).
2. In virtual channel setting register ADCDnVCRj (j = 0 to 23) for wiring-break detection, set normal A/D conversion mode (CNVCLS[2:0] = 0_H), set a pull-down or pull-up resistor on (ADCDnVCRj.PDE = 1_H, or ADCDnVCRj.PUE = 1_H) and set the desired channel in GCTRL[5:0].
3. Set wiring-break detection mode 2 (ADCDnODCR.ODE = 0) and the physical channel for wiring-break detection (ADOPDIGnm = 1).
4. Assert the trigger signal for SG0 to SG4 to start A/D conversion.
5. Repeat A/D conversion several times to check that the voltage of the result of A/D conversion with the pull-down resistor has not been converged to approximately AnVSS and the voltage of

the result of A/D conversion with the pull-up resistor has not been converged to approximately AnVCC.

30.4.4.4 Diagnosis of Wiring-Break Detection

Diagnosis of wiring-break detection is a self-diagnosis facility to check that wiring-break detection is working properly.

Start by performing A/D conversion in pin-level self-diagnosis mode, and then calculate the voltage as a baseline for comparison.

Next, make settings for pseudo-disconnection of the required channels (ANnm) and repeat A/D conversion from several to several tens of times in wire-break detection mode 2. If the result of A/D conversion in this disconnected state converged to approximately AnVSS or AnVCC, you can judge that wiring-break detection is working properly.

[Features]

1. Desired physical channels can be set for diagnosis of wiring-break detection.

[Settings]

1. Make settings in accord with the initial settings (**Figure 30.22, Initial Settings**).
2. In the virtual channel register ADCDnVCRj, set normal A/D conversion mode (CNVCLS[2:0] = 0_H), and the desired physical channel for wiring-break detection in GCTRL[5:0].
3. In the pin-level self-diagnosis control register ADCDnTDCR, set pin-level self-diagnosis (TDE = 1_H) and the desired level for pin-level self-diagnosis in TDLV[1:0].
4. Assert the trigger signal for SG0 to SG4 to start A/D conversion.
5. After A/D conversion, set wiring-break detection diagnosis enabled (ODDE =1_H) in ADCDnODCR (ADCDn automatically turns off pin-level self-diagnosis).
6. In ADCDnVCRj, set a pull-down resistor ON (PDE = 1_H) or pull-up resistor ON (PUE = 1_H), set wire-break detection mode 2 (ADCDnODCR.ODE = 0), the physical channel for wiring-break detection (ADOPDIGnm = 1).
7. Assert the trigger signal to make SG0 to SG4 start A/D conversion.
8. Repeat A/D conversion several to several tens of times in wiring-break detection diagnosis mode to check that the result of A/D conversion has converged to approximately AnVSS for with the pull-down resistor and AnVCC for the pull-up resistor.

30.4.4.5 Pin-Level Self-Diagnosis of T&H Paths

A facility for pin-level self-diagnosis is used for self-diagnostic testing of T&H paths.

This checks that the results of pin-level self-diagnosis for both the voltage held by the T&H circuit and the voltage when the T&H circuit is not used match the diagnostic voltages. If this test is run for all values (0_H, 1_H, 2_H, and 3_H) of the pin-level self-diagnosis level specification bits (TDLV) of the pin-level self-diagnosis control register (ADCDnTDCR) and the results match the respective diagnostic voltages, the T&H paths can be considered normal.

The following describes the procedures for setting and judgment under condition **(1)**, where pin-level self-diagnosis proceeds with the voltages held by the T&H circuits being used and under condition **(2)**, where pin-level self-diagnosis proceeds with the voltages held by the T&H circuits not being used.

(1) Pin-level self-diagnosis of T&H paths (the voltage held by the T&H circuits used)

Figure 30.16 shows an example of timing chart for self-diagnosis of T&H paths (the voltage held by the T&H circuits used) and **Figure 30.17** shows initial settings for self-diagnosis of T&H paths (the voltage held by the T&H circuits used).

[Settings]

1. Perform initialization as shown in **Figure 30.17**. Set held value of the A/D conversion (1_H) for the type of conversion for virtual channels 2 to 4 (ADCDnVCRj.CNVCLS[2:0]). Write 0_H to ADCDnTDCR.TDLV (pin-level self-diagnosis level).
2. Write 1 to the sampling start bit (SMPST) of the T&H sampling start control register (ADCDnTHSMPSTCR) to start sampling by the T&H circuits.
3. Write 1 to the scan group start bit (SGST) of the scan group 2 start control register (ADCDnSGSTCR2) as the software trigger for A/D conversion of the signals in scan group 2.
4. Write 01_H to the hold start bit (HLDST) of the hold start control register (ADCDnTHAHLDSTCR) to cause the T&H circuits of group A to hold the input voltages.*1
5. Write 1 to the scan group start bit (SGST) of the scan group 1 start control register (ADCDnSGSTCR1) to start conversion of the signals in scan group 1.
6. Wait for the first A/D conversion completed interrupt from ADCDnVCR0 for scan group 2 and write 1_H to the pin-level self-diagnosis level specification bit (TDLV) of the pin-level self-diagnosis control register (ADCDnTDCR) while A/D conversion is in progress to change the self-diagnosis level.
7. After the A/D conversion completed interrupt from ADCDnVCR5 for scan group 1, check the results of conversion by scan group 1.
   If the results of the respective data registers (ADCDnDRj) satisfy all the conditions of self-diagnosis level voltages specified in step 1), the results of the pin-level self-diagnosis when the T&H circuits are used are considered normal. In addition, the result of scan group 2 is not used and discarded.

Note 1. Wait for at least 32 cycles of CLK_ADC after the start of sampling by T&H circuits in step (1) before setting the hold start control register in step (3) in **Figure 30.16, Example of Timing Chart for Self-Diagnosis of T&H Paths (the voltage held by the T&H circuits used) (TDLV = 0H → 1H)**

NOTE

The results of conversion of diagnosis voltage at self-diagnosis include the total errors at self-diagnosis (TESH0SN). For the values of TESH0SN, see Section 37.15, A/D Convertor Characteristics.

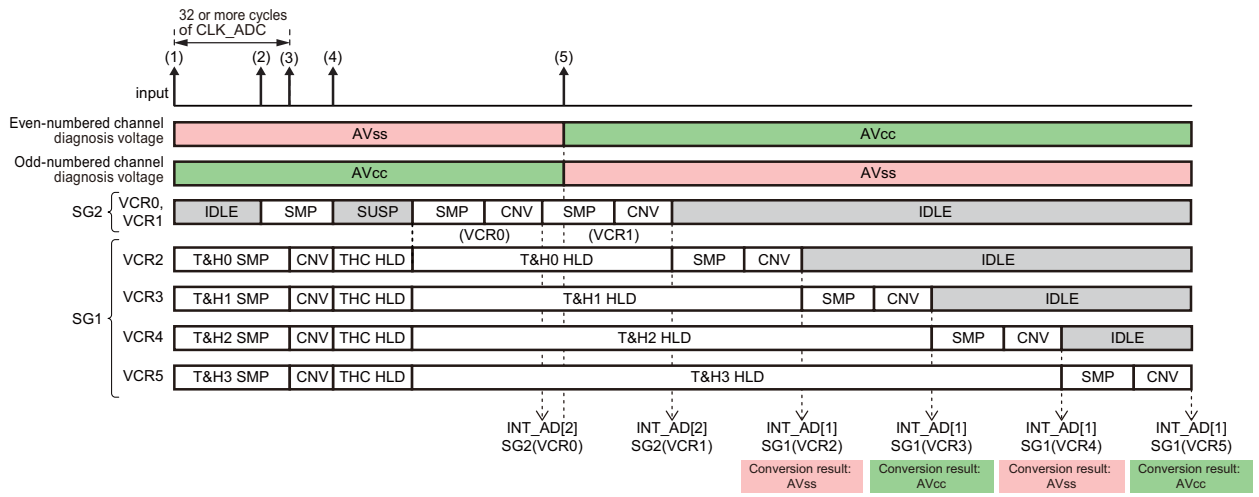

(1) Start sampling by the T&H circuits: THSMPSTCR.SMPST = 1
(2) Start SG2: SGSTCR2.SGST = 1
(3) Set T&H group A hold: ADCDnTHAHLDSTCR.HLDST = 1_H
(4) Start SG1: SGTCR1.SGST = 1
(5) Change the diagnostic voltage: TDCR.TDLV = $0_H \rightarrow 1_H$

Note: SMP: Sampling
HLD: Hold
CNV: Conversion
SUSP: Suspend

Figure 30.16 Example of Timing Chart for Self-Diagnosis of T&H Paths (the voltage held by the T&H circuits used) (TDLV = $0_H \rightarrow 1_H$)

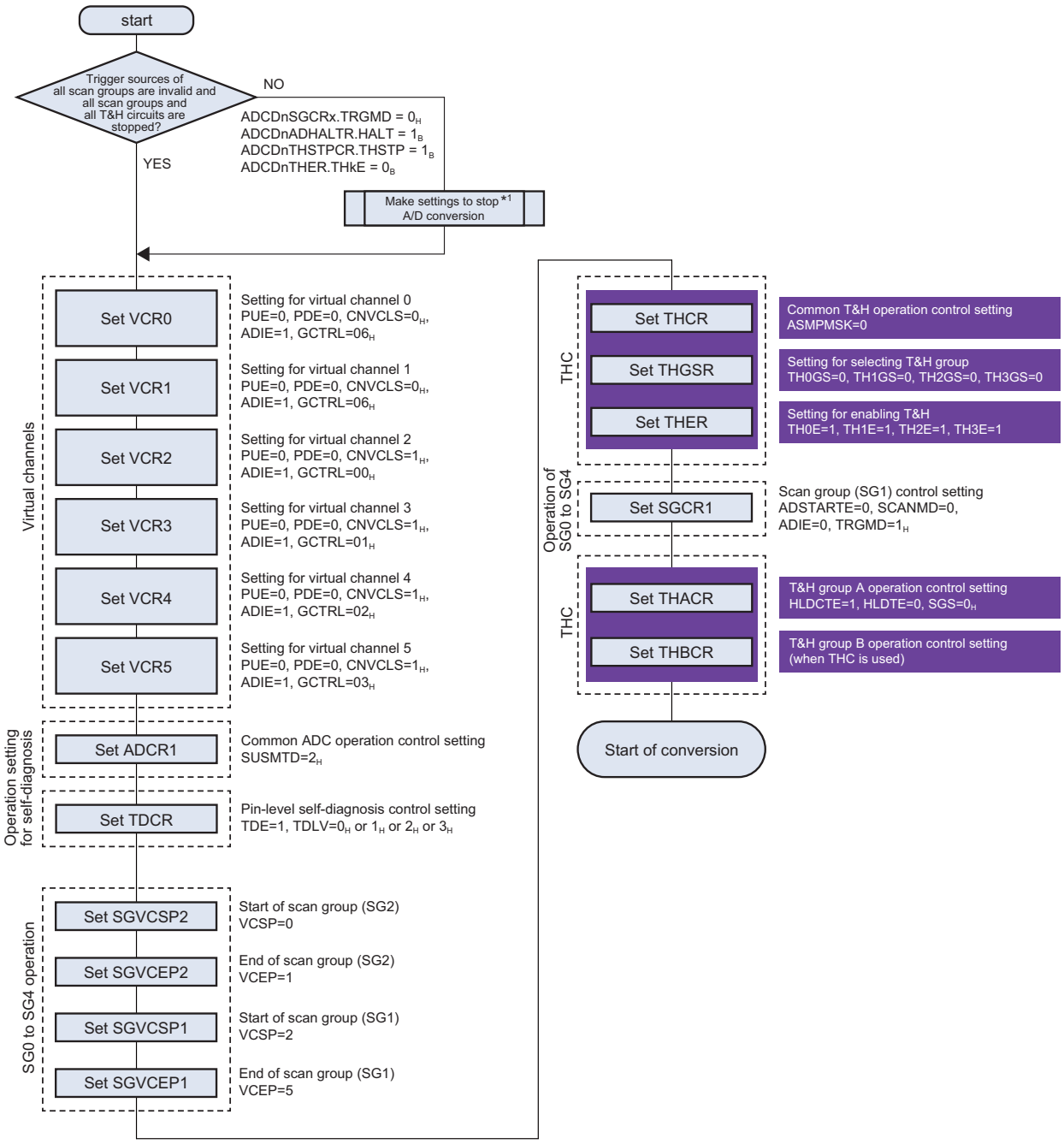

Note 1. See **Figure 30.24, Flowchart for Stopping A/D Conversion**.

Figure 30.17 Example of Settings for Self-Diagnosis of T&H Paths (the voltage held by the T&H circuits used)

(2) Pin-level self-diagnosis of T&H paths (the voltage held by the T&H circuits not used)

Figure 30.18 shows an example of timing chart for self-diagnosis of T&H paths (the voltage held by the T&H circuits not used) and **Figure 30.19** shows initial settings for self-diagnosis of T&H paths (the voltage held by the T&H circuits not used).

[Settings]

1. Perform initialization as shown in **Figure 30.19**. Set normal conversion (0_H) for the type of conversion for virtual channels 2 to 4 (ADCDnVCRj.CNVCLS[2:0]). Write 0_H to ADCDnTDCR.TDLV (pin-level self-diagnosis level).
2. Write 1 to the sampling start bit (SMPST) of the T&H sampling start control register (ADCDnTHSMPSTCR) to start sampling by the T&H circuits.
3. Write 1 to the scan group start bit (SGST) of the scan group 2 start control register (ADCDnSGSTCR2) as the software trigger for A/D conversion of the signals in scan group 2.
4. Write 01_H to the hold start bit (HLDST) of the hold start control register (ADCDnTHAHLDSTCR) to cause the T&H circuits of group A to hold the input voltages.*1
5. Write 1 to the scan group start bit (SGST) of the scan group 1 start control register (ADCDnSGSTCR1) to start conversion of the signals in scan group 1.
6. Wait for the first A/D conversion completed interrupt from ADCDnVCR0 for scan group 2 and write 1_H to the pin-level self-diagnosis level specification bit (TDLV) of the pin-level self-diagnosis control register (ADCDnTDCR) while A/D conversion is in progress to change the self-diagnosis level.
7. After the A/D conversion completed interrupt from ADCDnVCR5 for scan group 1, check the results of conversion by scan group 1.
   If the results of the respective data registers (ADCDnDRj) satisfy all the conditions of self-diagnosis level voltages specified in step 1), the results of the pin-level self-diagnosis when the T&H circuits are not used are considered normal. In addition, the result of scan group 2 is not used and discarded. Also, the results of conversion by scan group 2 are not used but discarded.

Note 1. Wait for at least 32 cycles of CLK_ADC after the start of sampling by T&H circuits in step (1) before setting the hold start control register in step (3) in **Figure 30.16, Example of Timing Chart for Self-Diagnosis of T&H Paths (the voltage held by the T&H circuits used) (TDLV = 0H → 1H)**.

NOTE

The results of conversion of diagnosis voltage at self-diagnosis include the total errors at self-diagnosis (TESH0SN). For the values of TESH0SN, see Section 37.15, A/D Convertor Characteristics.

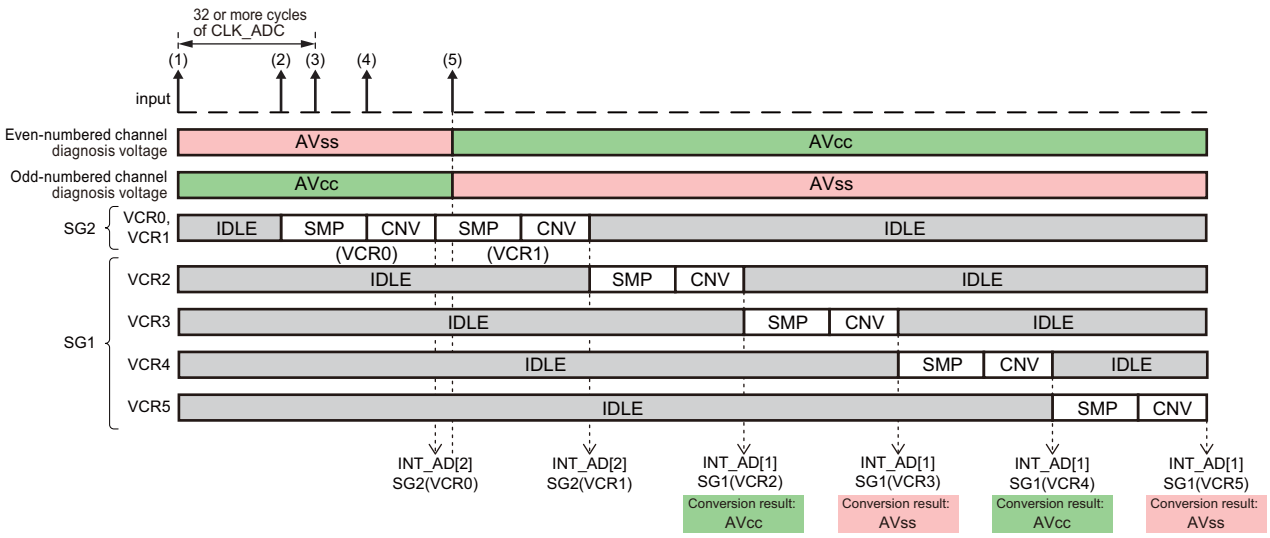

(1) Start sampling by the T&H circuits: THSMPSTCR.SMPST = 1
(2) Start SG2: SGSTCR2.SGST = 1
(3) Set T&H group A hold: ADCDnTHAHLDSTCR.HLDST = 1_H
(4) Start SG1: SGTCR1.SGST = 1
(5) Change the diagnostic voltage: TDCR.TDLV = $0_H \rightarrow 1_H$

Note: SMP: Sampling
HLD: Hold
CNV: Conversion
SUSP: Suspend

Figure 30.18 Example of Timing Chart for Self-Diagnosis of T&H Paths (the voltage held by the T&H circuits not used) (TDLV = $0_H \rightarrow 1_H$)

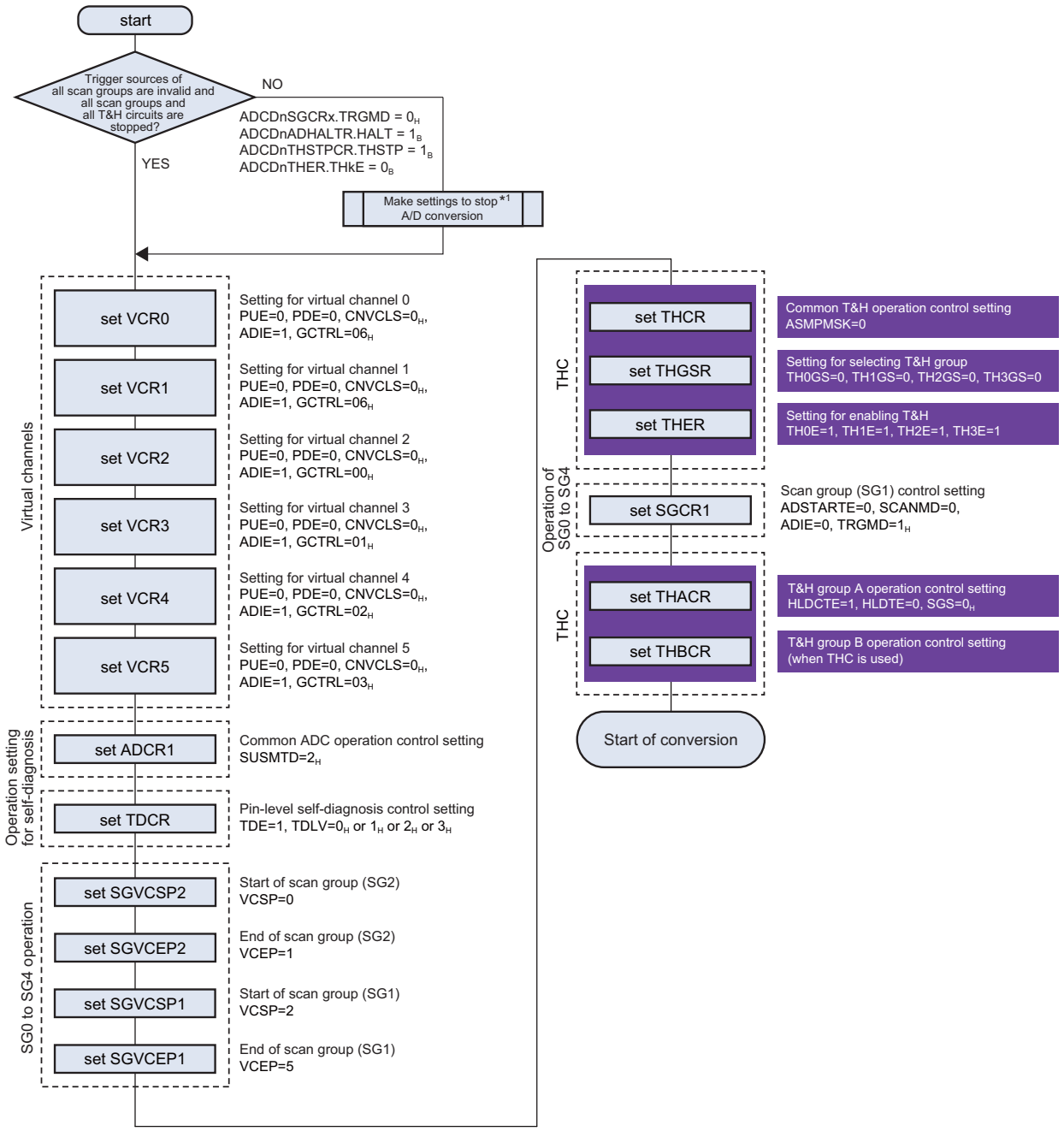

Note 1. See **Figure 30.24, Flowchart for Stopping A/D Conversion**.

Figure 30.19 Initial Settings for Self-Diagnosis of T&H Paths (the voltage held by the T&H circuits not used)

30.4.5 Interrupt Request Function

There are two interrupt requests: scan group x end and A/D error. An interrupt request signal is a pulse. The scan group x end interrupt can activate the DMA and DTS.

Interrupt output can be masked. When interrupt output is masked, 1 is set to the status register (interrupt generation).

30.4.5.1 Scan End Interrupt Request

Scan group x can issue a scan end interrupt request (INTADCDnlx) to the INTC. When ADIE in ADCDnSGCRx is set to 1, INTADCDnlx can be output after the SGx scan ends. When ADIE in ADCDnSGCRx is set to 0, the INTADCDnlx output at the end of the SGx scan can be disabled. When ADIE in ADCDnVCRj is set to 1, INTADCDnlx can be output when A/D conversion for virtual channel n in SGx ends. When ADIE in ADCDnVCRj is set to 0, the INTADCDnlx output at the end of the A/D conversion for virtual channel n in SGx can be disabled. The setting of ADIE in ADCDnSGCRx is independent of the setting of ADIE in ADCDnVCRj.

Example 1) A scan is executed for virtual channel 0 or 1 in SG0 when ADIE in ADCDnSGCR0 is 0, ADIE in ADCDnVCR0 is 1, and ADIE in ADCDnVCR1 is 0.
INTADCDnlx is output when A/D conversion ends for virtual channel 0.

Example 2) A scan is executed for virtual channel 0 or 1 in SG0 when ADIE in ADCDnSGCR0 is 0, ADIE in ADCDnVCR0 is 1, and ADIE in ADCDnVCR1 is 1.
INTADCDnlx is output when A/D conversion ends for virtual channel 0 and virtual channel 1.

Example 3) A scan is executed for virtual channel 0 or 1 in SG0 when ADIE in ADCDnSGCR0 is 1, ADIE in ADCDnVCR0 is 0, and ADIE in ADCDnVCR1 is 0.
INTADCDnlx is output when a scan ends (at the end of A/D conversion for virtual channel 1). INTADCDnlx is output at each two cycles (or more) in multicycle scan mode, or each time a scan ends (at the end of A/D conversion for virtual channel 1) in continuous scan mode.

Furthermore, the DMAC can be activated when INTADCDnIx occurs.

For the DMAC setting, see **Section 7, DMA**.

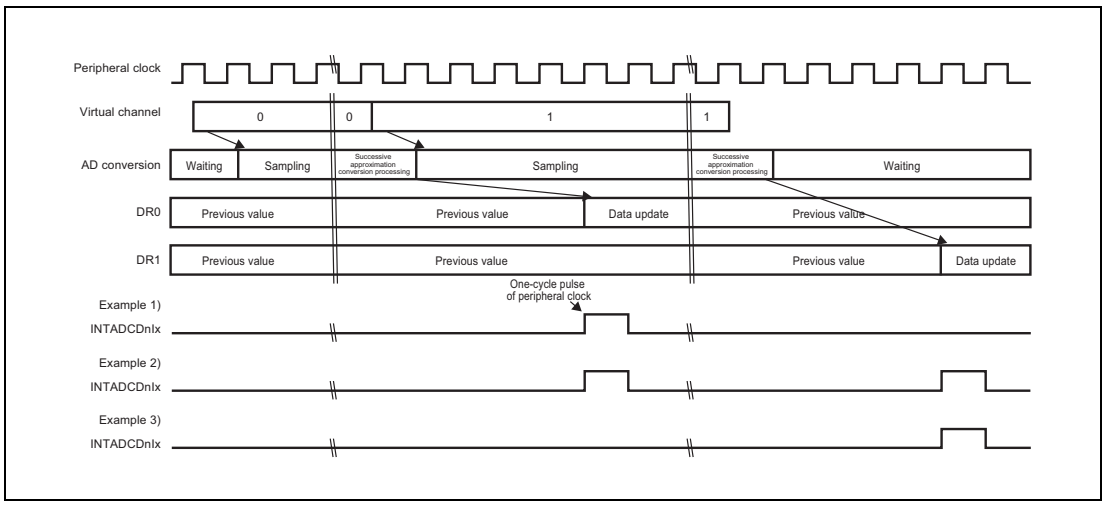

Figure 30.20 Scan Conversion End Interrupt Occurrence Timing

30.4.5.2 A/D Error Interrupt Request and A/D Parity Error Interrupt Request

The ADCD can issue an A/D error interrupt request (INTADCDnERR) to the INTC and an A/D parity error notification (ADPEn) to the error control module (ECM). For an error source for which ULEIE, OWEIE, and IDEIE in ADCDnSFTCR is set to 1, the OR condition of the error source is issued as INTADCDnERR. For an error source for which ULEIE, OWEIE, and IDEIE in ADCDnSFTCR is set to 0, INTADCDnERR can be disabled. ADPEn is enabled when PEIE in ADCDnSFTCR is set to 1. ADPEn is disabled when PEIE in ADCDnSFTCR is set to 0.

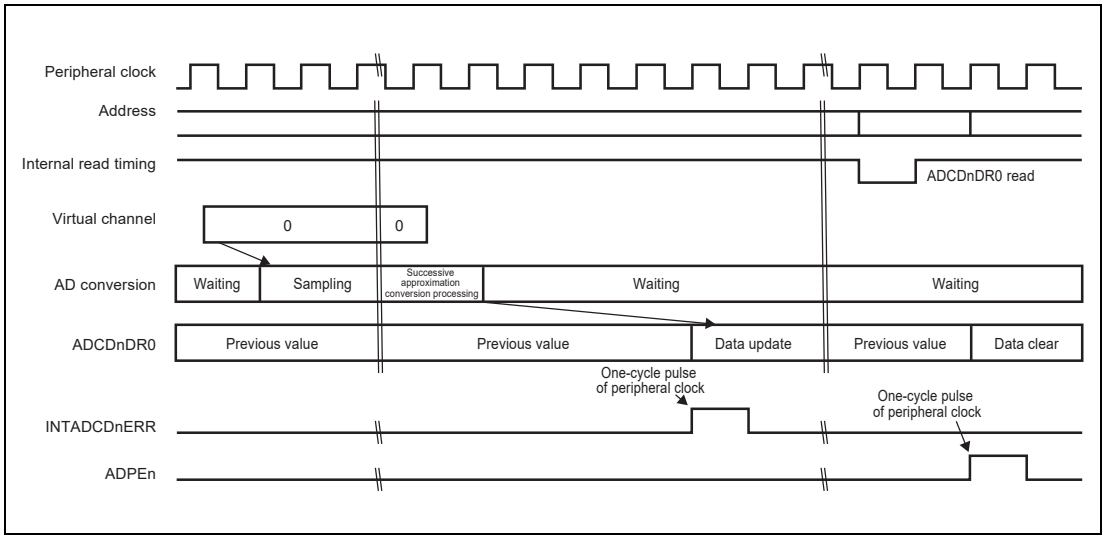

Figure 30.21 Example of an Occurrence of A/D Error Interrupt and A/D Parity Error Notification

30.5 Operation

30.5.1 Initial Settings

Figure 30.22 is a flowchart for initial settings. Make initial settings while trigger sources of all scan groups are invalid and all scan groups and all T&H circuits are stopped. If they are in operation, make settings to stop A/D conversion. See **Section 30.5.3, Procedure for Stopping A/D Conversion.**

Set the value after a reset for the functions not to be used.

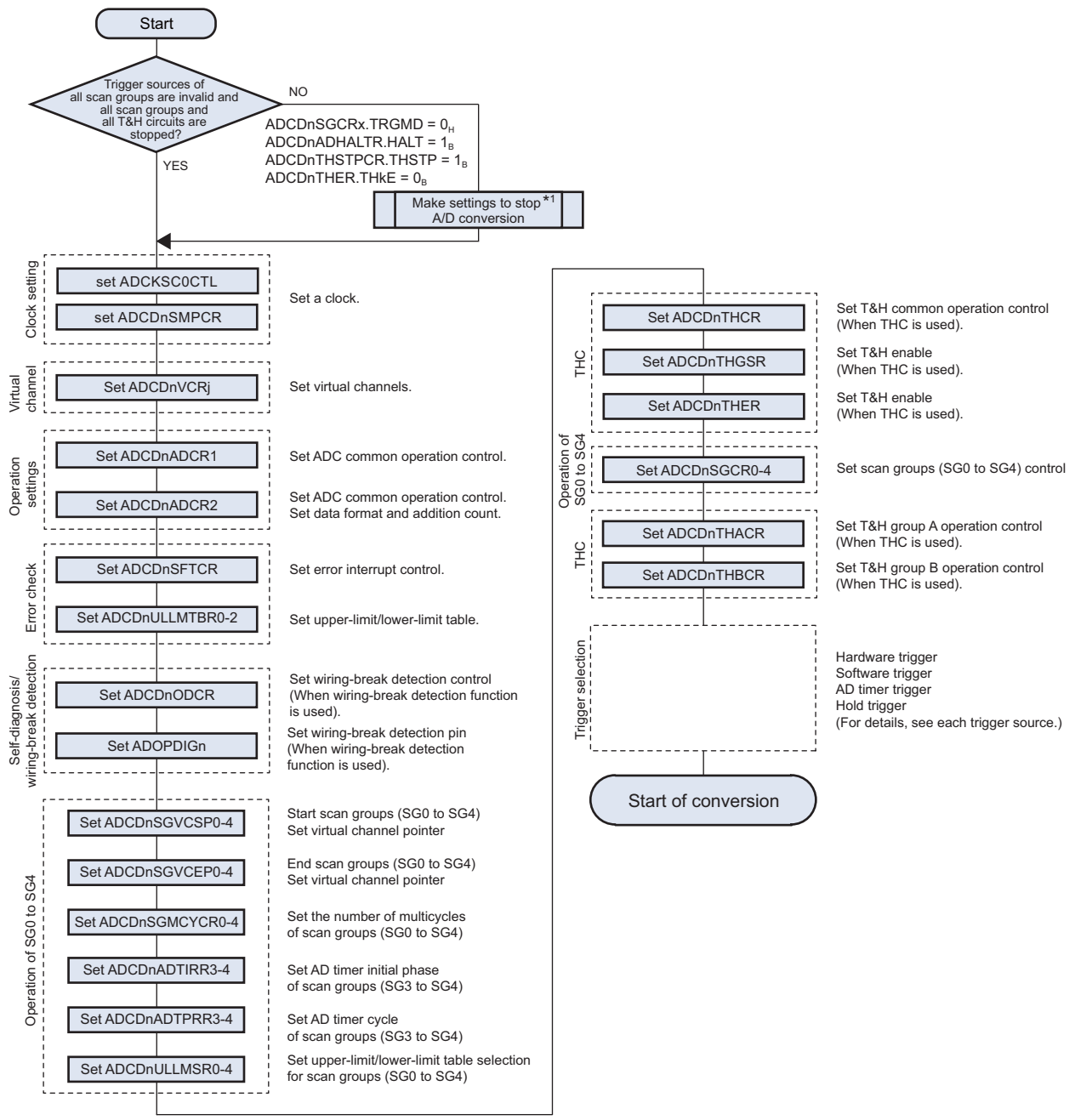

Note 1. See **Figure 30.24, Flowchart for Stopping A/D Conversion**.

Figure 30.22 Initial Settings

30.5.2 Procedure for Starting A/D Conversion

Figure 30.23 is a flowchart for starting A/D conversion.

The flowchart below is for starting A/D conversion using a hardware trigger when the T&H function is in use. If simultaneous tracking and holding on multiple channels is in use, be sure to only hold the voltage after 32 cycles of CLK_ADC have elapsed after sampling start for tracking and holding.

The flowchart in **Figure 30.23** shows the case where A/D conversion starts under the following conditions.

- Select hardware trigger input to scan group x:
  ADCDnSGCRx.TRGMD[1:0] = 1_H
- Automatic sampling of T&H circuits:
  ADCDnTHCR.ASMPMSK = 0_H
- Automatic control of T&H hold trigger:
  ADCDnTHACR.HLDCTE = 1_H and ADCDnTHACR.HLDTE = 1_H
  (or ADCDnTHBCR.HLDCTE=1_H and ADCDnTHBCR.HLDTE=1_H)

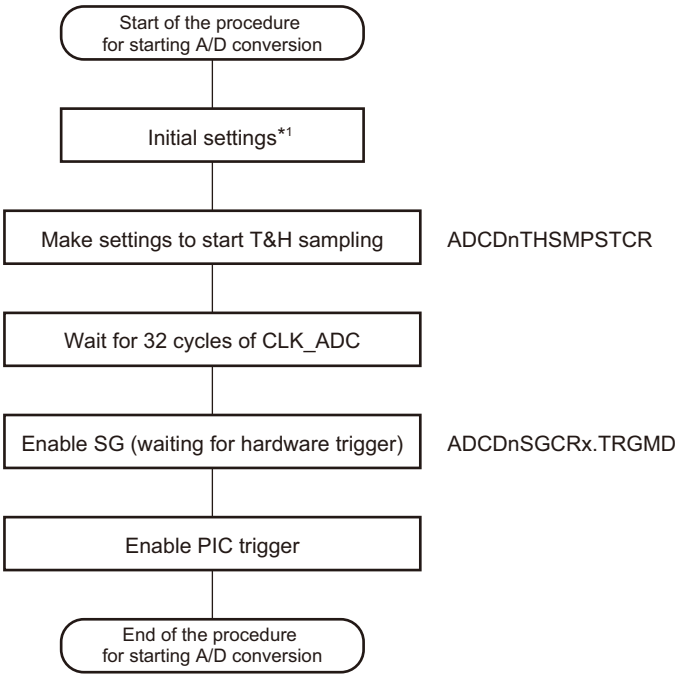

Note 1. See **Section 30.5.1, Initial Settings**.

Figure 30.23 Flowchart for Starting A/D Conversion

30.5.3 Procedure for Stopping A/D Conversion

Figure 30.24 is a flowchart for stopping A/D conversion.

The flowchart below is for stopping A/D conversion by disabling the trigger signal for all scan groups and stopping all scan groups and all T&H circuits.

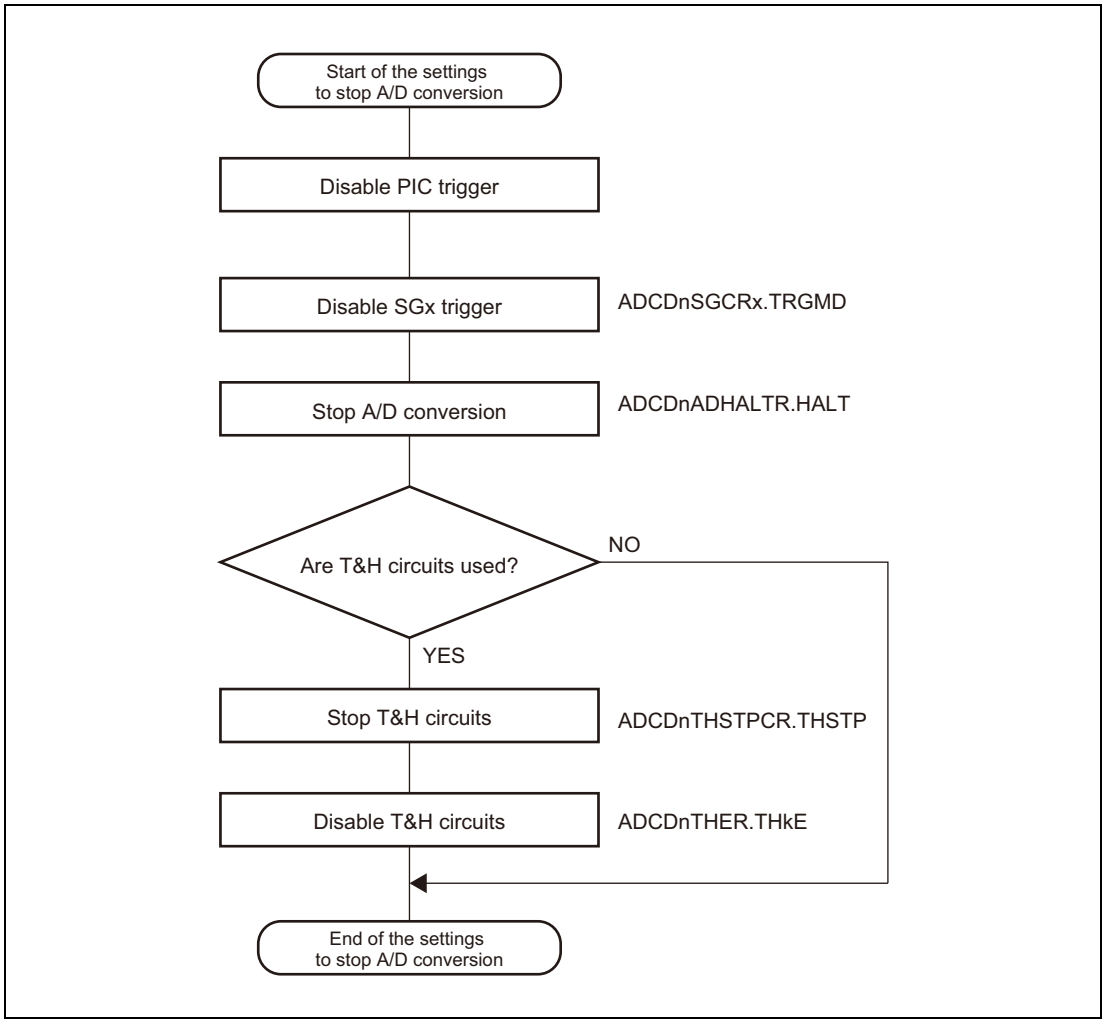

Figure 30.24 Flowchart for Stopping A/D Conversion

30.6 Definition of A/D Conversion Accuracy

A/D conversion accuracy is defined below.

- Resolution
  Number of digital output codes of the A/D converter
- Quantization error
  An error essentially contained in A/D converters, which is given as 1/2 LSB (**Figure 30.25).**
- Offset error
  Deviation of the analog input voltage value from the ideal A/D conversion characteristics when the digital output changes from the minimum voltage value 000_H to 001_H. However, the quantization error is not included (**Figure 30.25).**
- Full-scale error
  Deviation of the analog input voltage value from the ideal A/D conversion characteristics when the digital output changes from FFE_H to FFF_H. However, the quantization error is not included (**Figure 30.25**).
- DNL (Differential nonlinear error)
  Deviation between the ideal digital output code width (Vq) and the actual digital output code width (Va), which is given as (Va - Vq)/Vq. However, the offset error, the full-scale error, and the quantization error are not included (**Figure 30.25).**
- INL (Integral nonlinear error)
  Deviation of the actual value from the ideal A/D conversion characteristics, from the zero voltage to the full-scale voltage, which is given as an integral of DNL from 000_H to a digital output code. However, the offset error, the full-scale error, and the quantization error are not included (**Figure 30.25**).
- Total errors
  Maximum difference between the observed value and logical value. The offset error, the full-scale error, the quantization error, DNL, and INL are included (**Figure 30.25**).

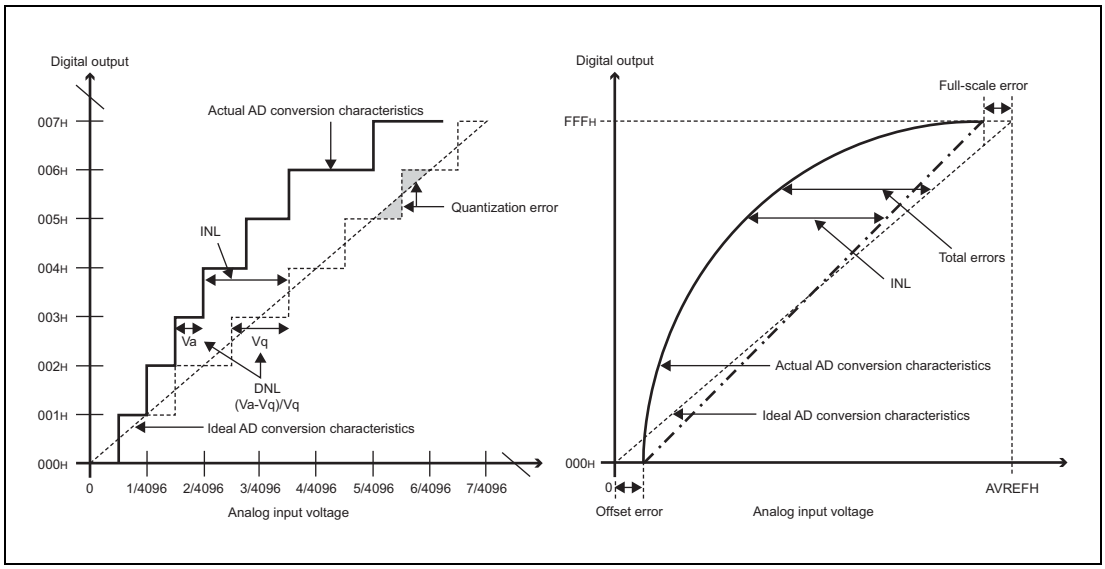

Figure 30.25 Definition of A/D Conversion Accuracy

Section 31 Functional Safety

31.1 Overview

This section describes the failure detection functions provided to detect the LSI failures in the early stage. Here, the failures include both the recoverable transient failures such as software errors of a memory and the unrecoverable permanent failures.

The following lists the failure detection functions provided by this LSI.

ECC and EDC

Detect failures of memories and data transfer paths; correct some types of failures.

Lockstep

Detects failures of the CPU1 in the early stage.

Memory protection

Detects erroneous access to memories and peripheral circuits to protect the data in these elements against erroneously access.

Clock monitor

Monitors the clock operation to detect abnormal operation.

BIST

Detects failures of the failure detection function itself.

Error control module (ECM)

Monitors various failure detection states in the LSI and defines the operation to be carried out upon failure detection.

31.2 ECC and EDC

31.2.1 Overview

31.2.1.1 ECC

This product incorporates ECC for the following memories. The ECC enables detection and correction of errors of the data retained in the memories. The ECC also enables detection and correction of errors produced between the ECC encoder and memories; and memories and ECC decoder.

Table 31.1 ECC Overview

Applicable Memory	Applicable Data Width [bits]	Operation upon Error Detection				Failure Insertion
		Detection/ Correction	Notice to ECM	Error Status	Address Capture	
Code flash	128	SEC-DED	Possible	Possible	Possible	Possible
Data flash Local RAM (CPU1)	32	SEC-DED	Possible	Possible	Possible	Possible
Instruction cache (data)	64	SEC-DED	Possible	Possible	Possible	Possible
Instruction cache (tag)	32	SED-DED	Possible	Possible	Possible	Possible
RAM for DTS	32	SEC-DED	Possible	Possible	Possible	Possible
Peripheral RAM (32 bits)	32	SEC-DED	Possible	Possible	Possible	Possible

Detection/Correction

SEC-DED: 1-bit errors can be detected and corrected, and 2-bit errors can only be detected.

SED-DED: 1-bit errors and 2-bit errors can only be detected.

Notice to ECM

An error detected can be notified to the ECM (error control module).

Error status

The status of an error detected is retained.

Address capture

The address of an error detected is retained.

Failure insertion

An ECC error can be intentionally caused to enable self-diagnosis of the ECC decoder operation.

31.2.1.2 Address Parity

This product incorporates address EDC (parity) for the following memories. The address EDC enables detection of errors during address decoding. The EDC also enables detection of errors produced at addresses between the parity encoder and memories.

Table 31.2 Address Parity Overview

Applicable Memory	Parity Bit	Notice to ECM	Error Status	Address Capture	Failure Insertion
Code flash	1 bit	Possible	Possible	Possible	Possible

31.2.1.3 Data Parity

This product incorporates data EDC (parity) for the particular data transfer. The data EDC enables detection of errors of the transferred data. For details, see **Section 31.2.8, Data Parity for Data Transfer Paths**.

31.2.2 Code Flash ECC and Address Parity

31.2.2.1 Overview

The code flash ECC is summarized in the table below.

Item	Description
ECC error detection and correction	ECC error detection and correction can be either enabled or disabled. When enabled, either of the following settings can be selected. • ECC error detection and correction are carried out (2-bit error detection and 1-bit error detection and correction are carried out). • ECC error detection is carried out (2-bit error detection and 1-bit error detection are carried out). When disabled, neither error detection nor correction is carried out. In the initial state, this function is enabled, and 1-bit error detection and correction and 2-bit error detection and notification are carried out.
Address parity	Address parity check can be either enabled or disabled. Address parity is checked during address decoding. In the initial state, this function is enabled.
Error notification	Upon occurrence of an ECC error or parity error, it is notified to the error control module. **ECC Error:** • Error notification can be either enabled or disabled upon detection of a 2-bit ECC error. • Error notification can be either enabled or disabled upon detection of a 1-bit ECC error. In the initial state, error notification is enabled upon detection of a 2-bit ECC error, and error notification is disabled upon detection of a 1-bit ECC error. **Parity Error:** • Error notification can be either enabled or disabled upon detection of an address parity error. In the initial state, error notification is enabled upon detection of an address parity error. The error notification signal is issued to the ECM, where a 2-bit ECC error and an address parity error are handled as one source, and a 1-bit ECC error is handled as one source.
Error status	A status register is provided, which indicates the statuses of 2-bit ECC error detection, 1-bit ECC detection, and address parity error detection. If an error occurs while no error status is set, the corresponding status is set. The error status can be cleared using the clear register.
Address capture	If an ECC error or a parity error occurs while no error status is set, the address at which the associated error has occurred is captured. The address is captured when a 2-bit ECC error, a 1-bit ECC, or an address parity error is detected. The error status serves as the enable bit of the capture address.

31.2.2.2 List of Registers

Table 31.3 List of Registers

Register Name	Symbol*1	Address
Code flash address parity control register	CFAPCTL	FFC6 2000_H
Code flash address parity control register L	CFAPCTLL	FFC6 2000_H
Code flash ECC control register (VCI)	CFECCCTL_VCI	FFC6 2200_H
Code flash ECC control register (VCI) L	CFECCCTL_VCIL	FFC6 2200_H
Code flash error information control register (VCI)	CFERRINT_VCI	FFC6 2204_H
Code flash error information control register (VCI) L	CFERRINT_VCIL	FFC6 2204_H
Code flash error information control register (VCI) LL	CFERRINT_VCILL	FFC6 2204_H
Code flash status clear register (VCI)	CFSTCLR_VCI	FFC6 2208_H
Code flash status clear register (VCI) L	CFSTCLR_VCIL	FFC6 2208_H
Code flash status clear register (VCI) LL	CFSTCLR_VCILL	FFC6 2208_H
Code flash error count overflow status register (VCI)	CFOVFSTR_VCI	FFC6 $220C_H$
Code flash error count overflow status register (VCI) L	CFOVFSTR_VCIL	FFC6 $220C_H$
Code flash error count overflow status register (VCI) LL	CFOVFSTR_VCILL	FFC6 $220C_H$
Code flash 1st error status register (VCI)	CF1STERSTR_VCI	FFC6 2210_H
Code flash 1st error status register (VCI) L	CF1STERSTR_VCIL	FFC6 2210_H
Code flash 1st error status register (VCI) LL	CF1STERSTR_VCILL	FFC6 2210_H
Code flash 1st error address register (VCI)	CF1STEADR0_VCI	FFC6 2250_H
Code flash 1st error address register (VCI) L	CF1STEADR0_VCIL	FFC6 2250_H
Code flash 1st error address register (VCI) LL	CF1STEADR0_VCILL	FFC6 2250_H
Code flash ECC control register (PE1)	CFECCCTL_PE1	FFC6 2400_H
Code flash ECC control register (PE1) L	CFECCCTL_PE1L	FFC6 2400_H
Code flash error information control register (PE1)	CFERRINT_PE1	FFC6 2404_H
Code flash error information control register (PE1) L	CFERRINT_PE1L	FFC6 2404_H
Code flash error information control register (PE1) LL	CFERRINT_PE1LL	FFC6 2404_H
Code flash status clear register (PE1)	CFSTCLR_PE1	FFC6 2408_H
Code flash status clear register (PE1) L	CFSTCLR_PE1L	FFC6 2408_H
Code flash status clear register (PE1) LL	CFSTCLR_PE1LL	FFC6 2408_H
Code flash error count overflow status register (PE1)	CFOVFSTR_PE1	FFC6 $240C_H$
Code flash error count overflow status register (PE1) L	CFOVFSTR_PE1L	FFC6 $240C_H$
Code flash error count overflow status register (PE1) LL	CFOVFSTR_PE1LL	FFC6 $240C_H$
Code flash 1st error status register (PE1)	CF1STERSTR_PE1	FFC6 2410_H
Code flash 1st error status register (PE1) L	CF1STERSTR_PE1L	FFC6 2410_H
Code flash 1st error status register (PE1) LL	CF1STERSTR_PE1LL	FFC6 2410_H
Code flash 1st error address register (PE1)	CF1STEADR0_PE1	FFC6 2450_H
Code flash 1st error address register (PE1) L	CF1STEADR0_PE1L	FFC6 2450_H
Code flash 1st error address register (PE1) LL	CF1STEADR0_PE1LL	FFC6 2450_H
Code flash sub-test control register (VCI)	CFSTSTCTL_VCI	FFC6 2350_H
Code flash sub-test control register (VCI)L	CFSTSTCTL_VCIL	FFC6 2350_H
Code flash sub-test control register (PE1)	CFSTSTCTL_PE1	FFC6 2550_H
Code flash sub-test control register (PE1)L	CFSTSTCTL_PE1L	FFC6 2550_H

Note 1. The registers with symbols "_VCI" and "_PE1" as suffixes are provided to the particular ECC controllers: the registers with "_VCI" are provided to the ECC controller for access from the system interconnect to the code flash, the registers with "_PE1" are provided to the ECC controller for access from the CPU1.

31.2.2.3 Details of Registers

(1) CFAPCTL — Code Flash Address Parity Control Register

CFAPCTL enables or disables address parity check. Set the PROT[1:0] bits to 01_B when writing to CFAPCTL.

This register is reset by any reset.

Access: CFAPCTL can be read/written in 32-bit units.
CFAPCTLL can be read/written in 16-bit units.

Address: CFAPCTL: $FFC6\ 2000_H$
CFAPCTLL: $FFC6\ 2000_H$

Value after reset: $0000\ 0000_H$

Bit	31	30	29	28	27	26	25	24	23	22	21	20	19	18	17	16
	—	—	—	—	—	—	—	—	—	—	—	—	—	—	—	—
Value after reset	0	0	0	0	0	0	0	0	0	0	0	0	0	0	0	0
R/W	R	R	R	R	R	R	R	R	R	R	R	R	R	R	R	R

Bit	15	14	13	12	11	10	9	8	7	6	5	4	3	2	1	0
	PROT[1:0]		—	—	—	—	—	—	—	—	—	—	—	—	APTESTA	APARIDIS
Value after reset	0	0	0	0	0	0	0	0	0	0	0	0	0	0	0	0
R/W	R/W	R/W	R	R	R	R	R	R	R	R	R	R	R	R	R/W	R/W

Table 31.4 CFAPCTL Register Contents

Bit Position	Bit Name	Function
31 to 16	Reserved	When read, the value after reset is returned. When writing, write the value after reset.
15 14	PROT[1:0]	Enable or disable modification of the APARIDIS and APTESTA bits. The value written is not retained. These bits are always read as 0. Set (PROT[1:0]) = (0, 1) when writing to CFAPCTL.
13 to 2	Reserved	When read, the value after reset is returned. When writing, write the value after reset.
1	APTESTA	Address Parity Checker Test Sets the address parity checker to test mode. When APTESTA = 1, the parity generated by the address parity generator is inverted. Write a value to this bit simultaneously with setting (PROT[1:0]) = (0, 1).
0	APARIDIS	Address Parity Check Disable Enables or disables address parity check by the address parity circuit. Write a value to this bit simultaneously with setting (PROT[1:0]) = (0, 1). 0: Enables address parity check. 1: Disables address parity check.

(2) CFECCCTL_VCI/_PE1 — Code Flash ECC Control Register

CFECCCTL enables or disables ECC error detection and correction and 1-bit error correction. Set the PROT[1:0] bits to 01_B when writing to CFECCCTL.

This register is reset by any reset.

Access: CFECCCTL_VCI and CFECCCTL_PE1 can be read/written in 32-bit units.
CFECCCTL_VCIL and CFECCCTL_PE1L can be read/written in 16-bit units.

Address: CFECCCTL_VCI: FFC6 2200_H
CFECCCTL_VCIL: FFC6 2200_H
CFECCCTL_PE1: FFC6 2400_H
CFECCCTL_PE1L: FFC6 2400_H

Value after reset: 0000 0000_H

Bit	31	30	29	28	27	26	25	24	23	22	21	20	19	18	17	16
	—	—	—	—	—	—	—	—	—	—	—	—	—	—	—	—
Value after reset	0	0	0	0	0	0	0	0	0	0	0	0	0	0	0	0
R/W	R	R	R	R	R	R	R	R	R	R	R	R	R	R	R	R

Bit	15	14	13	12	11	10	9	8	7	6	5	4	3	2	1	0
	PROT[1:0]		—	—	—	—	—	—	—	—	—	—	—	—	SECDIS	ECCDIS
Value after reset	0	0	0	0	0	0	0	0	0	0	0	0	0	0	0	0
R/W	R/W	R/W	R	R	R	R	R	R	R	R	R	R	R	R	R/W	R/W

Table 31.5 CFECCCTL Register Contents

Bit Position	Bit Name	Function
31 to 16	Reserved	When read, the value after reset is returned. When writing, write the value after reset.
15 14	PROT[1:0]	Enable or disable modification of the ECCDIS and SECDIS bits. The value written is not retained. These bits are always read as 0. Set (PROT[1:0]) = (0, 1) when writing to CFECCCTL.
13 to 2	Reserved	When read, the value after reset is returned. When writing, write the value after reset.
1	SECDIS	1-Bit Error Correction Disable Enables or disables 1-bit error correction when ECC error detection and correction are enabled. Write a value to this bit simultaneously with setting (PROT[1:0]) = (0, 1). 0: Enables correction of the 1-bit error detected. 1: Disables correction of the 1-bit error detected.
0	ECCDIS	ECC Disable Enables or disables ECC error detection and correction. Write a value to this bit simultaneously with setting (PROT[1:0]) = (0, 1). 0: Enables ECC error detection and correction. 1: Disables ECC error detection and correction.

(3) CFERRINT_VCI/_PE1 — Code Flash Error Information Control Register

CFERRINT enables or disables generation of the error notification signal to the ECM upon detection of a 2-bit ECC error, a 1-bit ECC error, or an address parity error.

This register is reset by any reset.

Access: CFERRINT_VCI and CFERRINT_PE1 can be read/written in 32-bit units.
CFERRINT_VCIL and CFERRINT_PE1L can be read/written in 16-bit units.
CFERRINT_VCILL and CFERRINT_PE1LL can be read/written in 8-bit units.

Address: CFERRINT_VCI: FFC6 2204_H
CFERRINT_VCIL: FFC6 2204_H
CFERRINT_VCILL: FFC6 2204_H
CFERRINT_PE1: FFC6 2404_H
CFERRINT_PE1L: FFC6 2404_H
CFERRINT_PE1LL: FFC6 2404_H

Value after reset: $0000\ 0006_H$

Bit	31	30	29	28	27	26	25	24	23	22	21	20	19	18	17	16
	—	—	—	—	—	—	—	—	—	—	—	—	—	—	—	—
Value after reset	0	0	0	0	0	0	0	0	0	0	0	0	0	0	0	0
R/W	R	R	R	R	R	R	R	R	R	R	R	R	R	R	R	R

Bit	15	14	13	12	11	10	9	8	7	6	5	4	3	2	1	0
	—	—	—	—	—	—	—	—	—	—	—	—	—	APEIE	DEDIE	SEDIE
Value after reset	0	0	0	0	0	0	0	0	0	0	0	0	0	1	1	0
R/W	R	R	R	R	R	R	R	R	R	R	R	R	R	R/W	R/W	R/W

Table 31.6 CFERRINT Register Contents

Bit Position	Bit Name	Function
31 to 3	Reserved	When read, the value after reset is returned. When writing, write the value after reset.
2	APEIE	Address Parity Error Notification Enable Enables or disables generation of the error notification signal upon detection of an address parity error when address parity check is enabled. 0: Disables notification of the address parity error. 1: Enables notification of the address parity error.
1	DEDIE	2-bit ECC Error Notification Enable Enables or disables generation of the error notification signal upon detection of a 2-bit error when ECC error detection and correction are enabled. 0: Disables notification of the 2-bit ECC error. 1: Enables notification of the 2-bit ECC error.
0	SEDIE	1-bit ECC Error Notification Enable Enables or disables generation of the error notification signal upon detection of a 1-bit error when ECC error detection and correction are enabled. 0: Disables notification of the 1-bit ECC error. 1: Enables notification of the 1-bit ECC error.

(4) CFSTCLR_VCI/_PE1 — Code Flash Status Clear Register

CFSTCLR clears the error flags in the error status register (CF1STERSTR), the overflow flag in the error overflow status register (CFOVFSTR), and the error address register (CF1STEADR).

This register is reset by any reset.

Access: CFSTCLR_VCI and CFSTCLR_PE1 can be written only in 32-bit units.
CFSTCLR_VCIL and CFSTCLR_PE1L can be written only in 16-bit units.
CFSTCLR_VCILL and CFSTCLR_PE1LL can be written only in 8-bit units.

Address: CFSTCLR_VCI: FFC6 2208_H
CFSTCLR_VCIL: FFC6 2208_H
CFSTCLR_VCILL: FFC6 2208_H
CFSTCLR_PE1: FFC6 2408_H
CFSTCLR_PE1L: FFC6 2408_H
CFSTCLR_PE1LL: FFC6 2408_H

Value after reset: $0000\ 0000_H$

Bit	31	30	29	28	27	26	25	24	23	22	21	20	19	18	17	16
	—	—	—	—	—	—	—	—	—	—	—	—	—	—	—	—
Value after reset	0	0	0	0	0	0	0	0	0	0	0	0	0	0	0	0
R/W	R	R	R	R	R	R	R	R	R	R	R	R	R	R	R	R

Bit	15	14	13	12	11	10	9	8	7	6	5	4	3	2	1	0
	—	—	—	—	—	—	—	—	—	—	—	—	—	—	—	STCLR0
Value after reset	0	0	0	0	0	0	0	0	0	0	0	0	0	0	0	0
R/W	R	R	R	R	R	R	R	R	R	R	R	R	R	R	R	W

Table 31.7 CFSTCLR Register Contents

Bit Position	Bit Name	Function
31 to 1	Reserved	When read, the value after reset is returned. When writing, write the value after reset.
0	STCLR0	Error Overflow Flag Clear 0: No effect (Setting 0 does not affect the APEF0, DEDF0, and SEDF0 flags in CF1STERSTR; ERROVF0 flag in CFOVFSTR; and CF1STEADR0.) 1: Writing 1 to this bit clears the APEF0, DEDF0, and SEDF0 flags in CF1STERSTR; ERROVF0 flag in CFOVFSTR; and CF1STEADR0.

(5) CFOVFSTR_VCI/PE1 — Code Flash Error Count Overflow Status Register

CFOVFSTR monitors occurrence of error overflow. If the second error occurs after the first error (= while any of the error flags in the error status register is set), the flag in this register is set. However, if the second error is identical to the first error (both the source and address are same), this flag is not set.

This register is reset by any reset.

Access: CFOVFSTR_VCI and CFOVFSTR_PE1 can be read only in 32-bit units.
CFOVFSTR_VCIL and CFOVFSTR_PE1L can be read only in 16-bit units.
CFOVFSTR_VCILL and CFOVFSTR_PE1LL can be read only in 8-bit units.

Address: CFOVFSTR_VCI: FFC6 $220C_H$
CFOVFSTR_VCIL: FFC6 $220C_H$
CFOVFSTR_VCILL: FFC6 $220C_H$
CFOVFSTR_PE1: FFC6 $240C_H$
CFOVFSTR_PE1L: FFC6 $240C_H$
CFOVFSTR_PE1LL: FFC6 $240C_H$

Value after reset: $0000\ 0000_H$

Bit	31	30	29	28	27	26	25	24	23	22	21	20	19	18	17	16
	—	—	—	—	—	—	—	—	—	—	—	—	—	—	—	—
Value after reset	0	0	0	0	0	0	0	0	0	0	0	0	0	0	0	0
R/W	R	R	R	R	R	R	R	R	R	R	R	R	R	R	R	R

Bit	15	14	13	12	11	10	9	8	7	6	5	4	3	2	1	0
	—	—	—	—	—	—	—	—	—	—	—	—	—	—	—	ERROVF0
Value after reset	0	0	0	0	0	0	0	0	0	0	0	0	0	0	0	0
R/W	R	R	R	R	R	R	R	R	R	R	R	R	R	R	R	R

Table 31.8 CFOVFSTR Register Contents

Bit Position	Bit Name	Function
31 to 1	Reserved	When read, the value after reset is returned.
0	ERROVF0	Error Overflow Flag ERROVF0 is set if the second error occurs while any of the error flags (APEF0, DEDF0, and SEDF0) in the error status register is set, except when both of the error address and source of the second error are the same as those of the first error. 0: Not occurred 1: Occurred Clearing condition: Set the STCLR0 bit in CFSTCLR to 1.

(6) CF1STERSTR_VCI/_PE1 — Code Flash 1st Error Status Register

CF1STERSTR monitors occurrence of the first error. The error status is set if an error occurs while the error flag is 0. If a 2-bit ECC error or an address parity error occurs while the 1-bit ECC error flag is set, error flag is overwritten. However, if a 2-bit ECC error or an address parity error occurs while only SEDF0 is set, the corresponding error flag is set.

If more than one error occurs simultaneously, all the corresponding error flags are set.

This register is reset by any reset.

Access: CF1STERSTR_VCI and CF1STERSTR_PE1 can be read only in 32-bit units.
CF1STERSTR_VCIL and CF1STERSTR_PE1L can be read only in 16-bit units.
CF1STERSTR_VCILL and CF1STERSTR_PE1LL can be read only in 8-bit units.

Address: CF1STERSTR_VCI: FFC6 2210_H
CF1STERSTR_VCIL: FFC6 2210_H
CF1STERSTR_VCILL: FFC6 2210_H
CF1STERSTR_PE1: FFC6 2410_H
CF1STERSTR_PE1L: FFC6 2410_H
CF1STERSTR_PE1LL: FFC6 2410_H

Value after reset: $0000\ 0000_H$

Bit	31	30	29	28	27	26	25	24	23	22	21	20	19	18	17	16
	—	—	—	—	—	—	—	—	—	—	—	—	—	—	—	—
Value after reset	0	0	0	0	0	0	0	0	0	0	0	0	0	0	0	0
R/W	R	R	R	R	R	R	R	R	R	R	R	R	R	R	R	R

Bit	15	14	13	12	11	10	9	8	7	6	5	4	3	2	1	0
	—	—	—	—	—	—	—	—	—	—	—	—	—	APEF0	DEDF0	SEDF0
Value after reset	0	0	0	0	0	0	0	0	0	0	0	0	0	0	0	0
R/W	R	R	R	R	R	R	R	R	R	R	R	R	R	R	R	R

Table 31.9 CF1STERSTR Register Contents

Bit Position	Bit Name	Function
31 to 3	Reserved	When read, the value after reset is returned.
2	APEF0	Address Parity Error Monitor Flag 0: Indicates that an address parity has not occurred. 1: Indicates that an address parity error has occurred while the error flags DEDF0 and APEF0 are 0. Clearing condition: Set the STCLR0 bit in CFSTCLR to 1.
1	DEDF0	2-bit ECC Error Monitor Flag 0: Indicates that a 2-bit ECC error has not occurred. 1: Indicates that a 2-bit ECC error has occurred while the error flags DEDF0 and APEF0 are 0. Clearing condition: Set the STCLR0 bit in CFSTCLR to 1.
0	SEDF0	1-bit ECC Error Monitor Flag 0: Indicates that a 1-bit ECC error has not occurred. 1: Indicates that a 1-bit ECC error has occurred while the error flags DEDF0, SEDF0, and APEF0 are 0. Clearing condition: Set the STCLR0 bit in CFSTCLR to 1.

(7) CF1STEADR0_VCI/_PE1 — Code Flash 1st Error Address Register

CF1STEADR holds the address at which an error has occurred.

The error address is retained if an error occurs while all the error flags are 0 in CF1STERSTR. The address is updated if a 2-bit ECC error or an address parity error occurs while the 1-bit ECC error flag is set as the first error. Once a 2-bit ECC error or an address parity error occurs, the address is not updated. Also EADR[24:4] in this register is corresponding to actual address [24:4]. Actual address can be calculated by adding high-order address which is mapped in FLI (Code Flash) onto base address.

This register is reset by any reset.

Access: CF1STEADR0_VCI and CF1STEADR0_PE1 can be read only in 32-bit units.
CF1STEADR0_VCIL and CF1STEADR0_PE1L can be read only in 16-bit units.
CF1STEADR0_VCILL and CF1STEADR0_PE1LL can be read only in 8-bit units.

Address: CF1STEADR0_VCI: FFC6 2250_H
CF1STEADR0_VCIL: FFC6 2250_H
CF1STEADR0_VCILL: FFC6 2250_H
CF1STEADR0_PE1: FFC6 2450_H
CF1STEADR0_PE1L: FFC6 2450_H
CF1STEADR0_PE1LL: FFC6 2450_H

Value after reset: $0000\ 0000_H$

Bit	31	30	29	28	27	26	25	24	23	22	21	20	19	18	17	16
	—	—	—	—	—	—	—	EADR[24:16]								
Value after reset	0	0	0	0	0	0	0	0	0	0	0	0	0	0	0	0
R/W	R	R	R	R	R	R	R	R	R	R	R	R	R	R	R	R

Bit	15	14	13	12	11	10	9	8	7	6	5	4	3	2	1	0
	EADR[15:4]												—	—	—	—
Value after reset	0	0	0	0	0	0	0	0	0	0	0	0	0	0	0	0
R/W	R	R	R	R	R	R	R	R	R	R	R	R	R	R	R	R

Table 31.10 CF1STEADR0 Register Contents

Bit Position	Bit Name	Function
31 to 25	Reserved	When read, the value after reset is returned.
24 to 4	EADR[24:4]	1st Error Address Monitor the address of the first error. The error address is set if an error occurs while all the error flags are 0 in CF1STERSTR. The address is updated if a 2-bit ECC error or an address parity error occurs while the 1-bit ECC error flag is set as the first error. Once a 2-bit ECC error or an address parity error occurs, the address is not updated. Clearing condition: Set the STCLR0 bit in CFSTCLR to 1.
3 to 0	Reserved	When read, the value after reset is returned.

(8) CFSTSTCTL_VCI/PE1 — Code Flash Sub-Test Control Register

CFSTSTCTL is used for the ECC test (self-diagnosis). This register is dedicated for code flash. After ECC test mode is enabled by setting ECCTST = 1, the ECC bits and address parity bit can be read directly.

This register is reset by any reset.

Access: CFSTSTCTL_VCI and CFSTSTCTL_PE1 can be read/written in 32-bit units.
CFSTSTCTL_VCIL and CFSTSTCTL_PE1L can be read/written in 16-bit units.

Address: CFSTSTCTL_VCI: FFC6 2350_H
CFSTSTCTL_VCIL: FFC6 2350_H
CFSTSTCTL_PE1: FFC6 2550_H
CFSTSTCTL_PE1L: FFC6 2550_H

Value after reset: 0000 0000_H

Bit	31	30	29	28	27	26	25	24	23	22	21	20	19	18	17	16
	—	—	—	—	—	—	—	—	—	—	—	—	—	—	—	—
Value after reset	0	0	0	0	0	0	0	0	0	0	0	0	0	0	0	0
R/W	R	R	R	R	R	R	R	R	R	R	R	R	R	R	R	R

Bit	15	14	13	12	11	10	9	8	7	6	5	4	3	2	1	0
	PROT[1:0]		—	—	—	—	—	—	—	—	—	—	—	—	—	ECCTST
Value after reset	0	0	0	0	0	0	0	0	0	0	0	0	0	0	0	0
R/W	R/W	R/W	R	R	R	R	R	R	R	R	R	R	R	R	R	R/W

Table 31.11 CF1STEADR0 Register Contents

Bit Position	Bit Name	Function
31 to 16	Reserved	When read, the value after reset is returned. When writing, write the value after reset.
15	PROT[1:0]	Enable or disable modification of the ECCTST bit. The value written is not retained. These bits are always read as 0. Set (PROT[1:0]) = (0, 1) when writing to CFSTSTCTL.
14		
13 to 1	Reserved	When read, the value after reset is returned. When writing, write the value after reset.
0	ECCTST	ECC Test After ECC test mode is enabled by setting ECCTST = 1, the ECC bits and the address parity bit can be read directly.

Correctly reading instructions from the code flash access port is not possible while ECC test mode is selected (ECCTST = 1). While the access port for the CPU is set to test mode (including during changes to the value of the ECCTST bit), the CPU must run a program from the local RAM and must not fetch instructions from the code flash memory.

The CPU has a small data buffer. If an old value remains in this buffer, the correct value cannot be read even when the ECCTST bit is switched. When switching the ECCTST bit, be sure to clear the data buffer. For how to clear the data buffer, see **Section 3, CPU System**.

From the code flash access port with ECC test mode selected, access must be made by reading 4 bytes aligned to 16n (n: integer) address. The results of reading code flash are as follows:

Table 31.12 Results of Reading Code Flash

Bit Number	Meaning	Bit Position	Description
bit[31:10]	all-0	31 to 10	These bits are always 0.
bit[9]	Address parity bit	9	Address parity bit
bit[8:0]	ECC bits	8 to 0	ECC bits

31.2.3 Data Flash ECC

31.2.3.1 Overview

The data flash ECC is summarized in the table below.

Item	Description
ECC error detection and correction	ECC error detection and correction can be either enabled or disabled. When enabled, either of the following settings can be selected. • ECC error detection and correction are carried out (2-bit error detection and 1-bit error detection and correction are carried out). • ECC error detection is carried out (2-bit error detection and 1-bit error detection are carried out). When disabled, neither error detection nor correction is carried out. In the initial state, this function is enabled, and 1-bit error detection and correction and 2-bit error detection and notification are carried out.
Address parity	None
Error notification	Upon occurrence of an ECC error, it is notified to the error control module. **ECC Error:** • Error notification can be either enabled or disabled upon detection of a 2-bit ECC error. • Error notification can be either enabled or disabled upon detection of a 1-bit ECC error. In the initial state, error notification is enabled upon detection of a 2-bit ECCerror, and error notification is disabled upon detection of a 1-bit ECC error. The error notification signal is output, where a 2-bit ECCerror is handled as one source, and a 1-bit ECC error is handled as one source.
Error status	A status register is provided, which indicates the statuses of 2-bit ECC error detection and 1-bit ECC error detection. If an error occurs while no error status is set, the corresponding status is set. The error status can be cleared using the clear register.
Address capture	If an ECC error occurs while no error status is set, the address at which the associated error has occurred is captured. The address is captured when a 2-bit ECCerror or a 1-bit ECC error is detected. The error status serves as the enable bit of the capture address.

31.2.3.2 List of Registers

Table 31.13 List of Registers

Register Name	Symbol	Address
Data flash ECC control register	DFECCCTL	FFC6 2C00$_H$
Data flash error status register	DFERSTR	FFC6 2C04$_H$
Data flash error status clear register	DFERSTC	FFC6 2C08$_H$
Data flash error overflow status register	DFOVFSTR	FFC6 2C0C$_H$
Data flash error overflow status clear register	DFOVFSTC	FFC6 2C10$_H$
Data flash error notification control register	DFERRINT	FFC6 2C14$_H$
Data flash 1st error address register	DFEADR	FFC6 2C18$_H$
Data flash test control register	DFTSTCTL	FFC6 2C1C$_H$

31.2.3.3 Details of Registers

(1) DFECCCTL — Data Flash ECC Control Register

DFECCCTL enables or disables ECC error detection and correction and 1-bit error correction. Set the PROT[1:0] bits to 01_B when writing to DFECCCTL.

This register is reset by any reset.

Access: DFECCCTL can be read/written in 16-bit units.

Address: DFECCCTL: FFC6 $2C00_H$

Value after reset: 0000_H

Bit	15	14	13	12	11	10	9	8	7	6	5	4	3	2	1	0
	PROT[1:0]		—	—	—	—	—	—	—	—	—	—	—	—	SEDDIS	ECCDIS
Value after reset	0	0	0	0	0	0	0	0	0	0	0	0	0	0	0	0
R/W	R/W	R/W	R	R	R	R	R	R	R	R	R	R	R	R	R/W	R/W

Table 31.14 CFECCCTL Register Contents

Bit Position	Bit Name	Function
15	PROT[1:0]	Enable or disable modification of the ECCDIS and SECDIS bits. The value written is not retained. These bits are always read as 0. Set (PROT[1:0]) = (0, 1) when writing to DFECCCTL.
14		
13 to 2	Reserved	When read, the value after reset is returned. When writing, write the value after reset.
1	SEDDIS	1-Bit Error Correction Disable Enables or disables 1-bit error correction when ECC error detection and correction are enabled. Write a value to this bit simultaneously with setting (PROT[1:0]) = (0, 1). 0: Enables correction of the 1-bit error detected. 1: Disables correction of the 1-bit error detected.
0	ECCDIS	ECC Disable Enables or disables ECC error detection and correction. Write a value to this bit simultaneously with setting (PROT[1:0]) = (0, 1). In the initial state, ECC error detection and correction are enabled. 0: Enables ECC error detection and correction. 1: Disables ECC error detection and correction.

(2) DFERSTR — Data Flash Error Status Register

DFERSTR monitors occurrence of errors.

The SEDF bit is set if a 1-bit ECC error is detected while ECC error detection and correction are enabled, and the DEDF bit is set if a 2-bit ECC error is detected.

This register is reset by any reset.

Access: DFERSTR can be read only in 8-bit units.

Address: DFERSTR: FFC6 2C04$_H$

Value after reset: 00$_H$

Bit	7	6	5	4	3	2	1	0
	—	—	—	—	—	—	DEDF	SEDF
Value after reset	0	0	0	0	0	0	0	0
R/W	R	R	R	R	R	R	R	R

Table 31.15 DFERSTR Register Contents

Bit Position	Bit Name	Function
7 to 2	Reserved	When read, the value after reset is returned.
1	DEDF	2-bit ECC Error Monitor Flag 0: A 2-bit ECC error is not generated. 1: A 2-bit ECC error is generated. Clearing condition: ERRCLR bit is set in data flash error status clear register. Setting condition: 2-bit ECC error is generated with both SEDF and DEDF being 0.
0	SEDF	1-bit ECC Error Monitor Flag 0: A 1-bit ECC error is not generated. 1: A 1-bit ECC error is generated. Clearing condition: ERRCLR bit is set in data flash error status clear register. Setting condition: 1-bit ECC error is generated with both SEDF and DEDF being 0.

(3) DFERSTC — Data Flash Error Status Clear Register

DFERSTC clears the error flags in the data flash error status register.

This register is reset by any reset.

Access: DFERSTC can be written only in 8-bit units.

Address: DFERSTC: FFC6 2C08$_H$

Value after reset: 00$_H$

Bit	7	6	5	4	3	2	1	0
	—	—	—	—	—	—	—	ERRCLR
Value after reset	0	0	0	0	0	0	0	0
R/W	W	W	W	W	W	W	W	W

Table 31.16 DFERSTC Register Contents

Bit Position	Bit Name	Function
7 to 1	Reserved	When read, the value after reset is returned. When writing, write the value after reset.
0	ERRCLR	SEDF/DEDF Flag Clear 0: Disabled (Setting this bit to 0 does not affect the DEDF and SEDF flags in DFERSTR.) 1: The DEDF and SEDF flags in DFERSTR are cleared.

(4) DFOVFSTR — Data Flash Error Overflow Status Register

DFOVFSTR monitors occurrence of data flash error overflow.

This register is reset by any reset.

Access: DFOVFSTR can be read only in 8-bit units.

Address: DFOVFSTR: FFC6 2C0C$_H$

Value after reset: 00$_H$

Bit	7	6	5	4	3	2	1	0
	—	—	—	—	—	—	—	ERR OVF
Value after reset	0	0	0	0	0	0	0	0
R/W	R	R	R	R	R	R	R	R

Table 31.17 DFOVFSTR Register Contents

Bit Position	Bit Name	Function
7 to 1	Reserved	When read, the value after reset is returned.
0	ERROVF	Error Overflow Flag ERROVF is set if an ECC error occurs while the error address register is full. 0: Not occurred 1: Occurred Clearing condition: Set the ERROVFCLR bit in DFOVFSTC to 1.

(5) DFOVFSTC — Data Flash Error Overflow Status Clear Register

DFOVFSTC clears the data flash error overflow flag.

This register is reset by any reset.

Access: DFOVFSTC can be written only in 8-bit units.

Address: DFOVFSTC: FFC6 2C10$_H$

Value after reset: 00$_H$

Bit	7	6	5	4	3	2	1	0
	—	—	—	—	—	—	—	ERR OVF CLR
Value after reset	0	0	0	0	0	0	0	0
R/W	W	W	W	W	W	W	W	W

Table 31.18 DFOVFSTC Register Contents

Bit Position	Bit Name	Function
7 to 1	Reserved	When read, the value after reset is returned. When writing, write the value after reset.
0	ERROVFCLR	Error Overflow Flag Clear 0: No effect (Setting the ERROVFCLR bit to 0 does not affect the flag in DFOVFSTR.) 1: The ERROVF flag in the DFOVFSTR register is cleared.

(6) DFERRINT — Data Flash Error Notification Control Register

DFERRINT enables or disables generation of the error notification signal upon detection of a 2-bit ECC error or a 1-bit ECC error.

This register is reset by any reset.

Access: DFERRINT can be read/written in 8-bit units.

Address: DFERRINT: FFC6 2C14$_H$

Value after reset: 02$_H$

Bit	7	6	5	4	3	2	1	0
	—	—	—	—	—	—	DEDIE	SEDIE
Value after reset	0	0	0	0	0	0	1	0
R/W	R	R	R	R	R	R	R/W	R/W

Table 31.19 DFERRINT Register Contents

Bit Position	Bit Name	Function
7 to 2	Reserved	When read, the value after reset is returned. When writing, write the value after reset.
1	DEDIE	2-bit ECC Error Notification Control Enables or disables generation of the error notification signal upon detection of a 2-bit error when ECC error detection and correction are enabled. 0: Disables notification of the 2-bit ECC error. 1: Enables notification of the 2-bit ECC error.
0	SEDIE	1-bit ECC Error Notification Control Enables or disables generation of the error notification signal upon detection of a 1-bit error when ECC error detection and correction are enabled. 0: Disables notification of the 1-bit ECC error. 1: Enables notification of the 1-bit ECC error.

(7) DFEADR — Data Flash 1st Error Address Register

DFEADR holds the address at which an ECC error has occurred while both of the SEDF and DEDF bits in the data flash error status register are 0.

This register is reset by any reset.

Access: This register can be read only in 32-bit units.

Address: DFEADR: FFC6 2C18$_H$

Value after reset: 0000 0000$_H$

Bit	31	30	29	28	27	26	25	24	23	22	21	20	19	18	17	16
	—	—	—	—	—	—	—	—	—	—	—	DFEADR[20:16]				
Value after reset	0	0	0	0	0	0	0	0	0	0	0	0	0	0	0	0
R/W	R	R	R	R	R	R	R	R	R	R	R	R	R	R	R	R

Bit	15	14	13	12	11	10	9	8	7	6	5	4	3	2	1	0
	DFEADR[15:2]														—	—
Value after reset	0	0	0	0	0	0	0	0	0	0	0	0	0	0	0	0
R/W	R	R	R	R	R	R	R	R	R	R	R	R	R	R	R	R

Table 31.20 DFEADR Register Contents

Bit Position	Bit Name	Function
31 to 21	Reserved	When read, the value after reset is returned.
20 to 2	DFEADR[20:2]	ECC Error Address These bits are read-only and used to monitor the address at which an ECC error has occurred. This register holds an internal address. Convert it to the actual address by adding the data flash base address FF20 0000$_H$.
1, 0	Reserved	When read, the value after reset is returned.

(8) DFTSTCTL — Data Flash Test Control Register

The DFTSTCTL register is used for the ECC test.

After ECC test mode is enabled by setting ECCTST = 1, the ECC bits can be read.

Set (PROT[1:0]) = (0, 1) when writing to this register.

This register is reset by any reset.

Access: DFTSTCTL can be read/written in 16-bit units.

Address: FFC6 2C1C$_H$

Value after reset: 0000$_H$

Bit	15	14	13	12	11	10	9	8	7	6	5	4	3	2	1	0
	PROT[1:0]		—	—	—	—	—	—	—	—	—	—	—	—	—	ECCTST
Value after reset	0	0	0	0	0	0	0	0	0	0	0	0	0	0	0	0
R/W	R/W	R/W	R	R	R	R	R	R	R	R	R	R	R	R	R	R/W

Table 31.21 DFTSTCTL Register Contents

Bit Position	Bit Name	Function
15	PROT[1:0]	Enable or disable modification of the ECCTST bit. The value written is not retained. These bits are always read as 0. Set (PROT[1:0]) = (0, 1) when writing to DFTSTCTL.
14		
13 to 1	Reserved	When read, the value after reset is returned. When writing, write the value after reset.
0	ECCTST	ECC Test Sets ECC test mode. Write a value to this bit simultaneously with setting (PROT[1:0]) = (0, 1).

31.2.3.4 Test Functions

ROM data and ECC bits can be read by the data flash test control register (DFTSTCTL) settings.

(1) Reading ROM data

(a) Set the ECCDIS bit in the data flash ECC control register to 1 to disable ECC error detection/correction.

(b) Since error detection and correction are not made during data flash reading while ECCDIS = 1, data flash output data is directly read.

Exiting this test mode

(a) Set the ECCDIS bit in the data flash ECC control register to 0 to enable ECC error detection/correction.

(2) Reading ECC data

(a) Set the ECCDIS bit in the data flash ECC control register to 1 to disable ECC error detection/correction.

(b) Set the ECCTST bit in the data flash test control register to 1 to specify test mode.

(c) When the data flash is read, the 7 lower-order bits of the read data are read as ECC data.

Exiting this test mode

(a) Set the ECCDIS bit in the data flash ECC control register to 0 to enable ECC error detection/correction.

(b) Set the ECCTST bit in the data flash test control register to 0 to specify normal mode.

(3) Self-diagnosis

ECC decoded data can be automatically diagnosed by writing incorrect data to the data flash in advance (fault injection) and then reading this data. A 1-bit ECC or a 2-bit error fault can be injected by generating correct ECC bits and inverting only appropriate bits.

For how to write the data flash, see the *RH850/P1x Flash Memory User's Manual: Hardware Interface*.

31.2.4 Local RAM (CPU1) ECC

31.2.4.1 Overview

The local RAM ECC of CPU1 is summarized in the table below.

Item	Description
ECC error detection and correction	ECC error detection and correction can be either enabled or disabled. When enabled, either of the following settings can be selected. • ECC error detection and correction are carried out (2-bit error detection and 1-bit error detection and correction are carried out). • ECC error detection is carried out (2-bit error detection and 1-bit error detection are carried out). When disabled, neither error detection nor correction is carried out. In the initial state, the ECC function is enabled; 1-bit error detection and correction and 2-bit error detection and notification are carried out.
Error notification	Upon occurrence of an ECC error, it is notified to the error control module. **ECC Error:** • Error notification can be either enabled or disabled upon detection of a 2-bit ECC error. • Error notification can be either enabled or disabled upon detection of a 1-bit ECC error. In the initial state, notification of the 2-bit error is enabled and notification of the 1-bit error is disabled. The error notification signal is output, where a 2-bit ECC error is handled as one source, and a 1-bit ECC error is handled as one source.
Error status	A status register is provided, which indicates the status of 2-bit ECC error detection and 1-bit ECC error detection. If an error occurs while no error status is set, the corresponding status is set. The error status can be cleared using the clear register.
Address capture	If an ECC error occurs while no error status is set, the address at which the error has occurred is captured. The address is captured when a 2-bit ECC error or 1-bit ECC erroris detected. The error status serves as the enable bit of the capture address.

CPU1 is capable of simultaneously writing or reading up to 128 bits of data at a time to or from the local RAM. Meanwhile, ECC bits are provided for each 32 bits of data and the locations for storage of each 32-bit data segment are referred to as banks 0 to 3. Addresses for the lowest-order bits (i.e., for the LSB side of the data) are for bank 0, while addresses for the highest-order bits (i.e., for the MSB side of the data) are for bank 3.

The relationship between addresses and banks is described below.

4 Lower-Order Bits of Address (Hexadecimal Notation)	F_H to C_H	B_H to 8_H	7_H to 4_H	3_H to 0_H
Bank number	Bank 3	Bank 2	Bank 1	Bank 0

31.2.4.2 List of Registers

Table 31.22 List of Registers

Address	Symbol	Register Name	R/W	Value after Reset	Access Size
FFC6 5004_H	LRTSTCTL_PE1	Local RAM test control register	R/W	0000 0000_H	16/32
FFC6 5008_H	LRTDATBF0_PE1	Local RAM test data read buffer 0	R	0000 0000_H	32
FFC6 $500C_H$	LRTDATBF1_PE1	Local RAM test data read buffer 1	R	0000 0000_H	32
FFC6 5400_H	LRECCCTL_PE1	Local RAM ECC control register (PE1)	R/W	0000 0000_H	16/32
FFC6 5404_H	LRERRINT_PE1	Local RAM error information control register (PE1)	R/W	0000 0006_H	8/16/32
FFC6 5408_H	LRSTCLR_PE1	Local RAM status clear register (PE1)	W	0000 0000_H	8/16/32
FFC6 $540C_H$	LROVFSTR_PE1	Local RAM error count overflow status register (PE1)	R	0000 0000_H	8/16/32
FFC6 5410_H	LR1STERSTR_PE1	Local RAM 1st error status register (PE1)	R	0000 0000_H	8/16/32
FFC6 5450_H	LR1STEADR0_PE1	Local RAM 1st error address register 0 (PE1)	R	0000 0000_H	8/16/32
FFC6 5454_H	LR1STEADR1_PE1	Local RAM 1st error address register 1 (PE1)	R	0000 0000_H	8/16/32
FFC6 5458_H	LR1STEADR2_PE1	Local RAM 1st error address register 2 (PE1)	R	0000 0000_H	8/16/32
FFC6 $545C_H$	LR1STEADR3_PE1	Local RAM 1st error address register 3 (PE1)	R	0000 0000_H	8/16/32

31.2.4.3 Details of Registers

(1) LRTSTCTL_PE1 — Local RAM Test Control Register

This register is used for the ECC test (self-diagnosis). After ECC test mode is enabled by setting ECCTST = 1, desired data can be written to the ECC bits. The DATSEL bit is used to select RAM data or the ECC bits.

This register is reset by any reset source.

Bit	31	30	29	28	27	26	25	24	23	22	21	20	19	18	17	16
	—	—	—	—	—	—	—	—	—	—	—	—	—	—	—	—
Value after reset	0	0	0	0	0	0	0	0	0	0	0	0	0	0	0	0
R/W	R	R	R	R	R	R	R	R	R	R	R	R	R	R	R	R

Bit	15	14	13	12	11	10	9	8	7	6	5	4	3	2	1	0
	PROT[1:0]		—	—	—	—	—	—	—	—	—	—	—	—	ECCTST	DATSEL
Value after reset	0	0	0	0	0	0	0	0	0	0	0	0	0	0	0	0
R/W	R/W	R/W	R	R	R	R	R	R	R	R	R	R	R	R	R/W	R/W

Table 31.23 LRTSTCTL_PE1 Register Contents

Bit Position	Bit Name	Function
31 to 16	Reserved	When read, the value after reset is returned. When writing, write the value after reset.
15 14	PROT[1:0]	These bits are used to enable or disable rewriting the ECCTST and DATSEL bits. The value written is not retained. These bits are always read as 0. Set (PROT[1:0]) = (0, 1) when writing to LRTSTCTL.
13 to 2	Reserved	When read, the value after reset is returned. When writing, write the value after reset.
1	ECCTST	ECC Test When ECC test mode is set (ECCTST = 1), reading through LRTDATBFn_PE1 is enabled, and direct writing is enabled by setting DATSEL = 1.
0	DATSEL	Data Select This bit is valid when ECCTST = 1. This bit selects the RAM bit which can be accessed when writing. When this bit is set to 1, bits [6:0] in the 32-bit write data are written to the ECC bits. 0: RAM data is selected. 1: The ECC bits are selected.

CAUTION

When ECC test mode for the local RAM is enabled (ECCTST = 1), the local RAM should be accessed in 4-byte units.

(2) LRTDATBFn_PE1 — Local RAM Test Data Read Buffer n (n = 0, 1)

In ECC test mode (self-diagnosis), the ECC bits can be read. If the local RAM is read while ECCTST = 1 in the local RAM test control register LRTSTCTL, reading from the Local RAM reads out the ECC bits, and these bits are stored in this buffer.

This register is reset by any reset source.

Bit	31	30	29	28	27	26	25	24	23	22	21	20	19	18	17	16
	—	—	—	—	—	—	—	—	—	LRDATBF(2n+1)[22:16]						
Value after reset	0	0	0	0	0	0	0	0	0	0	0	0	0	0	0	0
R/W	R	R	R	R	R	R	R	R	R	R	R	R	R	R	R	R

Bit	15	14	13	12	11	10	9	8	7	6	5	4	3	2	1	0
	—	—	—	—	—	—	—	—	—	LRDATBF(2n)[6:0]						
Value after reset	0	0	0	0	0	0	0	0	0	0	0	0	0	0	0	0
R/W	R	R	R	R	R	R	R	R	R	R	R	R	R	R	R	R

Table 31.24 LRTDATBFn_PE1 Register Contents

Bit Position	Bit Name	Function
31 to 23	Reserved	When read, the value after reset is returned.
22 to 16	LRDATBF (2n + 1) [22:16]	These bits are valid when ECCTST = 1 (selecting test mode) in the Local RAM test control register. When reading from the corresponding bank in the local RAM, the ECC bits for the local RAM (bank (2n + 1)) are stored in LRDATBF(2n + 1)[22:16].
15 to 7	Reserved	When read, the value after reset is returned.
6 to 0	LRDATBF(2n) [6:0]	These bits are valid when ECCTST = 1 (selecting test mode) in the Local RAM test control register. When reading from the corresponding bank in the local RAM, the ECC bits for the Local RAM (bank (2n)) are stored in LRDATBF (2n)[6:0].

NOTE

When n is 1, the bit name of bank 2 becomes LRDATBF2[6:0].

(3) LRECCCTL_PE1 — Local RAM ECC Control Register (PE1)

LRECCCTL enables or disables ECC error detection and correction and 1-bit error correction. Set the PROT1 and PROT[1:0] bits to 01_B when writing to LRECCCTL.

This register is reset by any reset source.

Bit	31	30	29	28	27	26	25	24	23	22	21	20	19	18	17	16
	—	—	—	—	—	—	—	—	—	—	—	—	—	—	—	—
Value after reset	0	0	0	0	0	0	0	0	0	0	0	0	0	0	0	0
R/W	R	R	R	R	R	R	R	R	R	R	R	R	R	R	R	R

Bit	15	14	13	12	11	10	9	8	7	6	5	4	3	2	1	0
	PROT[1:0]		—	—	—	—	—	—	—	—	—	—	—	—	SECDIS	ECCDIS
Value after reset	0	0	0	0	0	0	0	0	0	0	0	0	0	0	0	0
R/W	R/W	R/W	R	R	R	R	R	R	R	R	R	R	R	R	R/W	R/W

Table 31.25 LRECCCTL Register Contents

Bit Position	Bit Name	Function
31 to 16	Reserved	When read, the value after reset is returned. When writing, write the value after reset.
15 14	PROT[1:0]	Enable or disable modification of the ECCDIS and SECDIS bits. The value written is not retained. These bits are always read as 0. Set (PROT[1:0]) = (0, 1) when writing to LRECCCTL.
13 to 2	Reserved	When read, the value after reset is returned. When writing, write the value after reset.
1	SECDIS	1-Bit Error Correction Disable Enables or disables 1-bit error correction when ECC error detection and correction are enabled. Write a value to this bit simultaneously with setting (PROT[1:0]) = (0, 1). 0: Enables correction of the 1-bit error detected. 1: Disables correction of the 1-bit error detected.
0	ECCDIS	ECC Disable Enables or disables ECC error detection and correction. Write a value to this bit simultaneously with setting (PROT[1:0]) = (0, 1). 0: Enables ECC error detection and correction. 1: Disables ECC error detection and correction.

(4) LRERRINT_PE1 — Local RAM Error Information Control (PE1)

LRERRINT enables or disables generation of the error notification signal to the ECM upon detection of a 2-bit ECC error or 1-bit ECC error.

This register is reset by any reset source.

Bit	31	30	29	28	27	26	25	24	23	22	21	20	19	18	17	16
	—	—	—	—	—	—	—	—	—	—	—	—	—	—	—	—
Value after reset	0	0	0	0	0	0	0	0	0	0	0	0	0	0	0	0
R/W	R	R	R	R	R	R	R	R	R	R	R	R	R	R	R	R

Bit	15	14	13	12	11	10	9	8	7	6	5	4	3	2	1	0
	—	—	—	—	—	—	—	—	—	—	—	—	—	—	DEDIE	SEDIE
Value after reset	0	0	0	0	0	0	0	0	0	0	0	0	0	1	1	0
R/W	R	R	R	R	R	R	R	R	R	R	R	R	R	R	R/W	R/W

Table 31.26 LRERRINT Register Contents

Bit Position	Bit Name	Function
31 to 2	Reserved	When read, the value after reset is read. When writing, write the value after reset.
1	DEDIE	2-bit ECC Error Notification Enable Enables or disables generation of the error notification signal upon detection of a 2-bit error when ECC error detection and correction are enabled. 0: Disables notification of the 2-bit ECC error. 1: Enables notification of the 2-bit ECC error.
0	SEDIE	1-bit ECC Error Notification Enable Enables or disables generation of the error notification signal upon detection of a 1-bit error when ECC error detection and correction are enabled. 0: Disables notification of the 1-bit ECC error. 1: Enables notification of the 1-bit ECC error.

(5) LRSTCLR_PE1 — Local RAM Status Clear Register (PE1)

LRSTCLR clears the error flags in the error status register (LR1STERSTR), the overflow flag in the error overflow status register (LROVFSTR), and the error address register (LR1STEADR). LRSTCLR is a write-only register and is always read as 0.

This register is reset by any reset source.

Bit	31	30	29	28	27	26	25	24	23	22	21	20	19	18	17	16
	—	—	—	—	—	—	—	—	—	—	—	—	—	—	—	—
Value after reset	0	0	0	0	0	0	0	0	0	0	0	0	0	0	0	0
R/W	R	R	R	R	R	R	R	R	R	R	R	R	R	R	R	R

Bit	15	14	13	12	11	10	9	8	7	6	5	4	3	2	1	0
	—	—	—	—	—	—	—	—	—	—	—	—	STCLR3	STCLR2	STCLR1	STCLR0
Value after reset	0	0	0	0	0	0	0	0	0	0	0	0	0	0	0	0
R/W	R	R	R	R	R	R	R	R	R	R	R	R	W	W	W	W

Table 31.27 LRSTCLR Register Contents

Bit Position	Bit Name	Function
31 to 4	Reserved	When read, the value after reset is returned. When writing, write the value after reset.
3	STCLR3	Error Overflow Flag Clear (for bank 3) Writing 1 to this bit clears the DEDF3 and SEDF3 flags in LR1STERSTR; ERROVF3 flag in LROVFSTR; and LR1STEADR3.
2	STCLR2	Error Overflow Flag Clear (for bank 2) Writing 1 to this bit clears the DEDF2 and SEDF2 flags in LR1STERSTR; ERROVF2 flag in LROVFSTR; and LR1STEADR2.
1	STCLR1	Error Overflow Flag Clear (for bank 1) Writing 1 to this bit clears the DEDF1 and SEDF1 flags in LR1STERSTR; ERROVF1 flag in LROVFSTR; and LR1STEADR1.
0	STCLR0	Error Overflow Flag Clear (for bank 0) Writing 1 to this bit clears the DEDF0 and SEDF0 flags in LR1STERSTR; ERROVF0 flag in LROVFSTR; and LR1STEADR0.

(6) LROVFSTR_PE1 — Local RAM Error Count Overflow Status Register (PE1)

LROVFSTR monitors occurrence of error overflow. If the second error occurs after the first error (= while any of the error flags in the error status register is set), the flag in this register is set. However, if the second error is identical to the first error (both the source and address are same), this flag is not set. ERROVF is cleared by any reset source, or setting the STCLR bit to 1 in LRSTCLR.

Bit	31	30	29	28	27	26	25	24	23	22	21	20	19	18	17	16
	—	—	—	—	—	—	—	—	—	—	—	—	—	—	—	—
Value after reset	0	0	0	0	0	0	0	0	0	0	0	0	0	0	0	0
R/W	R	R	R	R	R	R	R	R	R	R	R	R	R	R	R	R

Bit	15	14	13	12	11	10	9	8	7	6	5	4	3	2	1	0
	—	—	—	—	—	—	—	—	—	—	—	—	ERROVF3	ERROVF2	ERROVF1	ERROVF0
Value after reset	0	0	0	0	0	0	0	0	0	0	0	0	0	0	0	0
R/W	R	R	R	R	R	R	R	R	R	R	R	R	R	R	R	R

Table 31.28 LROVFSTR Register Contents

Bit Position	Bit Name	Function
31 to 4	Reserved	When read, the value after reset is returned.
3	ERROVF3	Error Overflow Flag (for bank 3) ERROVF3 is set if the second error occurs while any of the error flags (DEDF3 and SEDF3) in the error status register is set, except when both of the error address and source of the second error are the same as those of the first error.
2	ERROVF2	Error Overflow Flag (for bank 2) ERROVF2 is set if the second error occurs while any of the error flags (DEDF2 and SEDF2) in the error status register is set, except when both of the error address and source of the second error are the same as those of the first error.
1	ERROVF1	Error Overflow Flag (for bank 1) ERROVF1 is set if the second error occurs while any of the error flags (DEDF1 and SEDF1) in the error status register is set, except when both of the error address and source of the second error are the same as those of the first error.
0	ERROVF0	Error Overflow Flag (for bank 0) ERROVF0 is set if the second error occurs while any of the error flags (DEDF0 and SEDF0) in the error status register is set, except when both of the error address and source of the second error are the same as those of the first error.

(7) LR1STERSTR_PE1 — Local RAM 1st Error Status Register (PE1)

LR1STERSTR monitors occurrence of the first error. The error status is set if an error occurs while the error flag is 0. The error flag is overwritten if a 2-bit ECC error occurs while the 1-bit ECC error flag is set.

If more than one error occurs simultaneously, all the corresponding error flags are set. LR1STERSTR is cleared by any reset source, or setting 1 to the STCLR bit in LRSTCLR.

This register is reset by any reset source.

Bit	31	30	29	28	27	26	25	24	23	22	21	20	19	18	17	16
	—	—	—	—	—	—	DEDF3	SEDF3	—	—	—	—	—	—	DEDF2	SEDF2
Value after reset	0	0	0	0	0	0	0	0	0	0	0	0	0	0	0	0
R/W	R	R	R	R	R	R	R	R	R	R	R	R	R	R	R	R

Bit	15	14	13	12	11	10	9	8	7	6	5	4	3	2	1	0
	—	—	—	—	—	—	DEDF1	SEDF1	—	—	—	—	—	—	DEDF0	SEDF0
Value after reset	0	0	0	0	0	0	0	0	0	0	0	0	0	0	0	0
R/W	R	R	R	R	R	R	R	R	R	R	R	R	R	R	R	R

Table 31.29 LR1STERSTR Register Contents

Bit Position	Bit Name	Function
7+8n:2+8n	Reserved	When read, the value after reset is returned.
1+8n	DEDFn	2-bit ECC Error Monitor Flag 0: Cleared to 0 by setting 1 to the STCLRn bit in LRSTCLR. 1: Indicates that a 2-bit ECC error has occurred while the error flags DEDFn are 0.
0+8n	SEDFn	1-bit ECC Error Monitor Flag 0: Cleared to 0 by setting 1 to the STCLRn bit in LRSTCLR. 1: Indicates that a 1-bit ECC error has occurred while all the error flags DEDFn and SEDFn are 0.

Note: n = 0 to 3, where “n” denotes a bank number.

(8) LR1STEADRn_PE1 — Local RAM 1st Error Address Register n (n = 0 to 3) (PE1)

LR1STEADRn holds the address at which an error has occurred.

The error address is set if an error occurs while all the error flags are 0 in LR1STERSTR. The address is updated if a 2-bit ECC error occurs while the 1-bit ECC error flag is set in LR1STERSTR. Once a 2-bit ECC error occurs, the address is not updated.

This register stores the actual address [18:4]. Align the bit position with the base address of each memory to transform the internal address to the actual address. LR1STEADRn is initialized by any reset source, or setting 1 to the STCLR bit in LRSTCLR.

Bit	31	30	29	28	27	26	25	24	23	22	21	20	19	18	17	16
	—	—	—	—	—	—	—	—	—	—	—	—	—	—	—	—
Value after reset	0	0	0	0	0	0	0	0	0	0	0	0	0	0	0	0
R/W	R	R	R	R	R	R	R	R	R	R	R	R	R	R	R	R

Bit	15	14	13	12	11	10	9	8	7	6	5	4	3	2	1	0
	—	EADR[14:0]														
Value after reset	0	0	0	0	0	0	0	0	0	0	0	0	0	0	0	0
R/W	R	R	R	R	R	R	R	R	R	R	R	R	R	R	R	R

Table 31.30 LR1STEADRn Register Contents

Bit Position	Bit Name	Function
31 to 15	Reserved	When read, the value after reset is returned.
14 to 0	EADR[14:0]	1st Error Address (for bank n) Monitors the address of the first error. The error address is set if an error occurs while all the error flags for bank n are 0 in LR1STERSTR. The address is updated if a 2-bit ECC error occurs while the 1-bit ECC error flag is set as the first error. Once a 2-bit ECC error occurs, the address is not updated.

31.2.4.4 Test Function

Arbitrary data can be written to the RAM data and ECC bits by register settings. The RAM data and ECC bits can be read.

(1) Writing RAM data

(a) Set the ECCTST bit in the local RAM test control register to 1 to specify test mode.

(b) Set the DATSEL bit in the local RAM test control register to 0 to select RAM data to be written.

(c) Writing data to the local RAM rewrites only RAM data without updating the ECC bits.

Exiting this test mode

(a) Set the ECCTST bit in the local RAM test control register to 0 to disable test mode (normal mode).

(2) Reading RAM data

(a) Set the ECCDIS bit in the local RAM ECC control register to 1 to disable ECC error detection/correction.

(b) Read the local RAM data. The RAM data is directly read because error detection and correction are not made.

Exiting this test mode

(a) Set the ECCDIS bit in the local RAM ECC control register to 0 to enable ECC error detection/correction.

(3) Writing ECC bits

(a) Set the ECCTST bit in the local RAM test control register to 1 to specify test mode.

(b) Set the DATSEL bit in the local RAM test control register to 1 to select the ECC bits for write access.

(c) Writing data to the local RAM rewrites only the ECC bits without updating the RAM data. At this time, bits [6:0] in the 32-bit write data are written to the ECC bits.

CAUTION

When writing desired values to the RAM data and ECC bits, you can start either by writing to the RAM data or ECC bits.

Exiting this test mode

(a) Set the ECCTST bit in the local RAM test control register to 0 to disable test mode (normal mode).

(4) Reading ECC bits

(a) Set the ECCTST bit in the local RAM test control register to 1 to specify test mode.

(b) When the local RAM is read, the ECC bits are stored in the corresponding bank position of local RAM test data read buffer 0 or local RAM test data read buffer 1.

Exiting this test mode

(a) Set the ECCTST bit in the local RAM test control register to 0 to disable test mode (normal mode).

(5) Self-diagnosis for the ECC check function

The procedures provided in (1) and (3) above make it possible to write arbitrary data to RAM data and ECC bits. This enables injection of fault by inverting appropriate bits in RAM data and ECC bits, for example. After that, read the local RAM in normal mode and check error correction and error detection result, which allows self-diagnosis for the ECC decoder.

31.2.5 Instruction Cache ECC and EDC

31.2.5.1 Overview

The instruction cache ECC is summarized in the table below.

Item	Description
ECC error detection and correction	ECC error detection and correction can be either enabled or disabled. When enabled, either of the following settings can be selected. • For instruction cache (data), ECC error detection and correction are carried out (2-bit error detection and 1-bit error detection and correction) or ECC error detection is carried out (2-bit error detection and 1-bit error detection). • For instruction cache (TAG), ECC error detection is carried out (2-bit error detection and 1-bit error detection). When disabled, neither error detection nor correction is carried out. In the initial state, the ECC function is enabled. For instruction cache (data), 2-bit error detection and 1-bit error detection and correction are carried out. For instruction cache (TAG), 2-bit error detection and 1-bit error detection are carried out. SED (detection of 1-bit error) and DED (detection of 2-bit error) are handled as a cache error and SEC (detection and correction of 1-bit error) is not handled as a cache error.
Address parity	None
Error notification	Upon occurrence of an ECC error, it is notified to the error control module. **ECC Error:** • Error notification can be either enabled or disabled upon detection of a 2-bit ECC error. • Error notification can be either enabled or disabled upon detection of a 1-bit ECC error. In the initial state, notification of the 2-bit ECC error is disabled, and notification of the 1-bit ECC error is disabled.
Error status	A status register is provided, which indicates the statuses of 2-bit ECC error detection and 1-bit ECC error detection. If an error occurs while no error status is set, the corresponding status is set. The error status can be cleared using the clear register.
Address capture	If an ECC error occurs while no error status is set, the address at which the associated error has occurred is captured. The address is captured when a 2-bit ECC error or a 1-bit ECC error is detected. The error status serves as the enable bit of the capture address.

31.2.5.2 List of Registers

Table 31.31 List of Registers

Address	Symbol	Register Name	R/W	Value after Reset	Access Size
FFC6 0400_H	IDECCCTL_PE1	Instruction cache data RAM ECC control register (PE1)	R/W	0000 0000_H	16/32
FFC6 0404_H	IDERRINT_PE1	Instruction cache data RAM error information control register (PE1)	R/W	0000 0000_H	8/16/32
FFC6 0408_H	IDSTCLR_PE1	Instruction cache data RAM error status clear register (PE1)	W	0000 0000_H	8/16/32
FFC6 $040C_H$	IDOVFSTR_PE1	Instruction cache data RAM error count overflow status register (PE1)	R	0000 0000_H	8/16/32
FFC6 0410_H	ID1STERSTR_PE1	Instruction cache data RAM 1st error status register (PE1)	R	0000 0000_H	8/16/32
FFC6 0450_H	ID1STEADR0_PE1	Instruction cache data RAM (bank 0) 1st error address register (PE1)	R	0000 0000_H	8/16/32
FFC6 0454_H	ID1STEADR1_PE1	Instruction cache data RAM (bank 1) 1st error address register (PE1)	R	0000 0000_H	8/16/32
FFC6 1400_H	ITECCCTL_PE1	Instruction cache tag RAM ECC control register (PE1)	R/W	0000 0000_H	16/32
FFC6 1404_H	ITERRINT_PE1	Instruction cache tag RAM error information control register (PE1)	R/W	0000 0000_H	8/16/32
FFC6 1408_H	ITSTCLR_PE1	Instruction cache tag RAM error status clear register (PE1)	W	0000 0000_H	8/16/32
FFC6 $140C_H$	ITOVFSTR_PE1	Instruction cache tag RAM error count overflow status register (PE1)	R	0000 0000_H	8/16/32
FFC6 1410_H	IT1STERSTR_PE1	Instruction cache tag RAM 1st error status clear register (PE1)	R	0000 0000_H	8/16/32
FFC6 1450_H	IT1STEADR0_PE1	Instruction cache tag RAM (bank 0) 1st error address register (PE1)	R	0000 0000_H	8/16/32

31.2.5.3 Details of Registers

(1) IDECCCTL_PE1 — Instruction Cache Data RAM ECC Control Register (PE1)

IDECCCTL enables or disables ECC error detection and correction for cache data RAM. Set the PROT[1:0] bits to 01_B when writing to IDECCCTL.

IDECCCTL is initialized by any reset source.

Bit	31	30	29	28	27	26	25	24	23	22	21	20	19	18	17	16
	—	—	—	—	—	—	—	—	—	—	—	—	—	—	—	—
Value after reset	0	0	0	0	0	0	0	0	0	0	0	0	0	0	0	0
R/W	R	R	R	R	R	R	R	R	R	R	R	R	R	R	R	R

Bit	15	14	13	12	11	10	9	8	7	6	5	4	3	2	1	0
	PROT[1:0]		—	—	—	—	—	—	—	—	—	—	—	—	—	ECCDIS
Value after reset	0	0	0	0	0	0	0	0	0	0	0	0	0	0	0	0
R/W	R/W	R/W	R	R	R	R	R	R	R	R	R	R	R	R	R	R/W

Table 31.32 IDECCCTL Register Contents

Bit Position	Bit Name	Function
31 to 16	Reserved	When read, the value after reset is returned. When writing, write the value after reset.
15 14	PROT[1:0]	Enable or disable modification of the ECCDIS bit. The value written is not retained. These bits are always read as 0. Set (PROT[1:0]) = (0, 1) when writing to IDECCCTL.
13 to 1	Reserved	When read, the value after reset is returned. When writing, write the value after reset.
0	ECCDIS	ECC Disable Enables or disables ECC error detection and correction. Write a value to this bit simultaneously with setting (PROT[1:0]) = (0, 1). 0: Enables ECC error detection and correction. 1: Disables ECC error detection and correction.

(2) IDERRINT_PE1 — Instruction Cache Data RAM Error Information Control Register (PE1)

IDERRINT enables or disables generation of the error notification signal to the ECM upon detection of a 2-bit ECC error or a 1-bit ECC error in cache data RAM.

IDERRINT is initialized by any reset source.

Bit	31	30	29	28	27	26	25	24	23	22	21	20	19	18	17	16
	—	—	—	—	—	—	—	—	—	—	—	—	—	—	—	—
Value after reset	0	0	0	0	0	0	0	0	0	0	0	0	0	0	0	0
R/W	R	R	R	R	R	R	R	R	R	R	R	R	R	R	R	R

Bit	15	14	13	12	11	10	9	8	7	6	5	4	3	2	1	0
	—	—	—	—	—	—	—	—	—	—	—	—	—	—	DEDIE	SEDIE
Value after reset	0	0	0	0	0	0	0	0	0	0	0	0	0	0	0	0
R/W	R	R	R	R	R	R	R	R	R	R	R	R	R	R	R/W	R/W

Table 31.33 IDERRINT Register Contents

Bit Position	Bit Name	Function
31 to 2	Reserved	When read, the value after reset is returned. When writing, write the value after reset.
1	DEDIE	2-bit ECC Error Notification Enable Enables or disables generation of the error notification signal upon detection of a 2-bit error when ECC error detection and correction are enabled. 0: Disables notification of the 2-bit ECC error. 1: Enables notification of the 2-bit ECC error.
0	SEDIE	1-bit ECC Error Notification Enable Enables or disables generation of the error notification signal upon detection of a 1-bit error when ECC error detection and correction are enabled. 0: Disables notification of the 1-bit ECC error. 1: Enables notification of the 1-bit ECC error.

(3) IDSTCLR_PE1 — Instruction Cache Data RAM Error Status Clear Register (PE1)

IDSTCLR clears the error flags in the error status register (ID1STERSTR), the overflow flag in the error overflow status register (IDOVFSTR), and the error address register (ID1STEADR). IDSTCLR is a write-only register and is always read as 0.

This register is reset by any reset source.

Bit	31	30	29	28	27	26	25	24	23	22	21	20	19	18	17	16
	—	—	—	—	—	—	—	—	—	—	—	—	—	—	—	—
Value after reset	0	0	0	0	0	0	0	0	0	0	0	0	0	0	0	0
R/W	R	R	R	R	R	R	R	R	R	R	R	R	R	R	R	R

Bit	15	14	13	12	11	10	9	8	7	6	5	4	3	2	1	0
	—	—	—	—	—	—	—	—	—	—	—	—	—	—	STCLR1	STCLR0
Value after reset	0	0	0	0	0	0	0	0	0	0	0	0	0	0	0	0
R/W	R	R	R	R	R	R	R	R	R	R	R	R	R	R	W	W

Table 31.34 IDSTCLR Register Contents

Bit Position	Bit Name	Function
31 to 2	Reserved	When read, the value after reset is returned. When writing, write the value after reset.
1	STCLR1	Error Overflow Flag Clear (for bank 1) Writing 1 to this bit clears the DEDF1and SEDF1 flags in ID1STERSTR; ERROVF1 flag in IDOVFSTR; and ID1STEADR1.
0	STCLR0	Error Overflow Flag Clear (for bank 0) Writing 1 to this bit clears the DEDF0and SEDF0 flags in ID1STERSTR; ERROVF0 flag in IDOVFSTR; and ID1STEADR0.

(4) IDOVFSTR_PE1 — Instruction Cache Data RAM Error Count Overflow Status Register (PE1)

IDOVFSTR monitors occurrence of error overflow in cache data RAM. If the second error occurs after the first error (= while any of the error flags in the error status register is set), the flag in this register is set. However, if the second error is identical to the first error (both the source and address are same), this flag is not set. ERROVF is cleared by any reset source, or setting the STCLR bit to 1 in IDSTCLR.

Bit	31	30	29	28	27	26	25	24	23	22	21	20	19	18	17	16
	—	—	—	—	—	—	—	—	—	—	—	—	—	—	—	—
Value after reset	0	0	0	0	0	0	0	0	0	0	0	0	0	0	0	0
R/W	R	R	R	R	R	R	R	R	R	R	R	R	R	R	R	R

Bit	15	14	13	12	11	10	9	8	7	6	5	4	3	2	1	0
	—	—	—	—	—	—	—	—	—	—	—	—	—	—	ERROVF1	ERROVF0
Value after reset	0	0	0	0	0	0	0	0	0	0	0	0	0	0	0	0
R/W	R	R	R	R	R	R	R	R	R	R	R	R	R	R	R	R

Table 31.35 IDOVFSTR Register Contents

Bit Position	Bit Name	Function
31 to 2	Reserved	When read, the value after reset is returned.
1	ERROVF1	Error Overflow Flag (for bank 1) ERROVF1 is set if the second error occurs while any of the error flags (DEDF1 and SEDF1) in the error status register is set, except when both of the error address and source of the second error are the same as those of the first error.
0	ERROVF0	Error Overflow Flag (for bank 0) ERROVF0 is set if the second error occurs while any of the error flags (DEDF0 and SEDF0) in the error status register is set, except when both of the error address and source of the second error are the same as those of the first error.

(5) ID1STERSTR_PE1 — Instruction Cache Data RAM 1st Error Status Register (PE1)

ID1STERSTR monitors occurrence of the first error. Error detection and flag update condition is individually set in bank 0 and 1. If an error is occurred all error flags(DEDFx,SEDFx) in the same bank is 0, error status is set. Also, if 2-bit ECC error is occurred when SEDFx is set, DEDFx is set. In that case, SEDFx is not changed. Please note that SEDFx is not set 1-bit ECC error is occurred when DEDFx is already set in the same bank. ID1STERSTR is cleared by any reset source, or setting the STCLR bit to 1 in IDSTCLR.

Bit	31	30	29	28	27	26	25	24	23	22	21	20	19	18	17	16
	—	—	—	—	—	—	—	—	—	—	—	—	—	—	—	—
Value after reset	0	0	0	0	0	0	0	0	0	0	0	0	0	0	0	0
R/W	R	R	R	R	R	R	R	R	R	R	R	R	R	R	R	R

Bit	15	14	13	12	11	10	9	8	7	6	5	4	3	2	1	0
	—	—	—	—	—	—	DEDF1	SEDF1	—	—	—	—	—	—	DEDF0	SEDF0
Value after reset	0	0	0	0	0	0	0	0	0	0	0	0	0	0	0	0
R/W	R	R	R	R	R	R	R	R	R	R	R	R	R	R	R	R

Table 31.36 ID1STERSTR Register Contents

Bit Position	Bit Name	Function
31 to 10	Reserved	When read, the value after reset is returned.
9	DEDF1	2-bit ECC Error Monitor Flag (for bank 1) 0: Cleared to 0 by setting the STCLR1 bit to 1 in IDSTCLR. 1: Indicates that a 2-bit ECC error has occurred while the error flag DEDF1 is 0.
8	SEDF1	1-bit ECC Error Monitor Flag (for bank 1) 0: Cleared to 0 by setting the STCLR1 bit to 1 in IDSTCLR. 1: Indicates that a 1-bit ECC error has occurred while the error flags DEDF1 and SEDF1 are 0.
7 to 2	Reserved	When read, the value after reset is returned.
1	DEDF0	2-bit ECC Monitor Flag (for bank 0) 0: Cleared to 0 by setting the STCLR0 bit to 1 in IDSTCLR. 1: Indicates that a 2-bit ECC error has occurred while the error flag DEDF0 is 0.
0	SEDF0	1-bit ECC Error Monitor Flag (for bank 0) 0: Cleared to 0 by setting the STCLR0 bit to 1 in IDSTCLR. 1: Indicates that a 1-bit ECC error has occurred while the error flags DEDF0 and SEDF0 are 0.

(6) ID1STEADRn_PE1 — Instruction Cache Data RAM (Bank n) 1st Error Address Register (n = 0, 1) (PE1)

ID1STEADR holds the address at which an error has occurred in cache data RAM. The error address is set if an error occurs while all the error flags for the relevant banks are 0 in ID1STERSTR. However, the address is not updated if 1-bit ECC error occurs during error flag of 1st error shows 1-bit ECC error. 2-bit ECC occurs, the address is updated. Once a 2-bit ECC error occurs, the address is not updated. This resister holds physical address of CacheRAM. Entry address is stored in EADRn[6:0] and way group number in EADRn[8]. Please note that EADRn[7] is always “0”. ID1STEADR is cleared by any reset source, or setting the STCLR bit to 1 in IDSTCLR.

Bit	31	30	29	28	27	26	25	24	23	22	21	20	19	18	17	16
	—	—	—	—	—	—	—	—	—	—	—	—	—	—	—	—
Value after reset	0	0	0	0	0	0	0	0	0	0	0	0	0	0	0	0
R/W	R	R	R	R	R	R	R	R	R	R	R	R	R	R	R	R

Bit	15	14	13	12	11	10	9	8	7	6	5	4	3	2	1	0
	—	—	—	—	—	—	—	EADRn[8:0]								
Value after reset	0	0	0	0	0	0	0	0	0	0	0	0	0	0	0	0
R/W	R	R	R	R	R	R	R	R	R	R	R	R	R	R	R	R

Table 31.37 ID1STEADRn Register Contents

Bit Position	Bit Name	Function
31 to 9	Reserved	When read, the value after reset is returned.
8 to 0	EADRn[8:0]	1st Error Address (for bank n) Monitor the address of the first error. The error address is set if an error occurs while all the error flags for bank n are 0 in CF1STERSTR. However, the address is not updated if 1-bit ECC error occurs during error flag of 1st error shows 1-bit ECC error. 2-bit ECC occurs, the address is updated.Once a 2-bit ECC error occurs, the address is not updated.

(7) ITECCCTL_PE1 — Instruction Cache Tag RAM ECC Control Register (PE1)

ITECCCTL enables or disables ECC error detection in cache tag RAM. Set the PROT[1:0] bits to 01_B when writing to ITECCCTL.

ITECCCTL is initialized by any reset source.

Bit	31	30	29	28	27	26	25	24	23	22	21	20	19	18	17	16
	—	—	—	—	—	—	—	—	—	—	—	—	—	—	—	—
Value after reset	0	0	0	0	0	0	0	0	0	0	0	0	0	0	0	0
R/W	R	R	R	R	R	R	R	R	R	R	R	R	R	R	R	R

Bit	15	14	13	12	11	10	9	8	7	6	5	4	3	2	1	0
	PROT[1:0]		—	—	—	—	—	—	—	—	—	—	—	—	—	ECCDIS
Value after reset	0	0	0	0	0	0	0	0	0	0	0	0	0	0	0	0
R/W	R/W	R/W	R	R	R	R	R	R	R	R	R	R	R	R	R	R/W

Table 31.38 ITECCCTL Register Contents

Bit Position	Bit Name	Function
31 to 16	Reserved	When read, the value after reset is returned. When writing, write the value after reset.
15 14	PROT[1:0]	Enable or disable modification of the ECCDIS bit. The value written is not retained. These bits are always read as 0. Set (PROT[1:0]) = (0, 1) when writing to ITECCCTL.
13 to 1	Reserved	When read, the value after reset is read. When writing, write the value after reset.
0	ECCDIS	ECC Disable Enables or disables ECC error detection. 0: Enables ECC error detection. 1: Disables ECC error detection.

(8) ITERRINT_PE1 — Instruction Cache Tag RAM Error Information Control Register (PE1)

ITERRINT enables or disables generation of the error notification signal to the ECM upon detection of a 2-bit ECC error or a 1-bit ECC error in cache tag RAM.

ITERRINT is initialized by any reset source.

Bit	31	30	29	28	27	26	25	24	23	22	21	20	19	18	17	16
	—	—	—	—	—	—	—	—	—	—	—	—	—	—	—	—
Value after reset	0	0	0	0	0	0	0	0	0	0	0	0	0	0	0	0
R/W	R	R	R	R	R	R	R	R	R	R	R	R	R	R	R	R

Bit	15	14	13	12	11	10	9	8	7	6	5	4	3	2	1	0
	—	—	—	—	—	—	—	—	—	—	—	—	—	—	DEDIE	SEDIE
Value after reset	0	0	0	0	0	0	0	0	0	0	0	0	0	0	0	0
R/W	R	R	R	R	R	R	R	R	R	R	R	R	R	R	R/W	R/W

Table 31.39 ITERRINT Register Contents

Bit Position	Bit Name	Function
31 to 2	Reserved	When read, the value after reset is returned. When writing, write the value after reset.
1	DEDIE	2-bit ECC Error Notification Enable Enables or disables generation of the error notification signal upon detection of a 2-bit error when ECC error detection and correction are enabled. 0: Disables notification of the 2-bit ECC error. 1: Enables notification of the 2-bit ECC error.
0	SEDIE	1-bit ECC Error Notification Enable Enables or disables generation of the error notification signal upon detection of a 1-bit error when ECC error detection and correction are enabled. 0: Disables notification of the 1-bit ECC error. 1: Enables notification of the 1-bit ECC error.

(9) ITSTCLR_PE1 — Instruction Cache Tag RAM Error Status Clear Register (PE1)

ITSTCLR clears the error flags in the error status register (IT1STERSTR), the overflow flag in the error overflow status register (ITOVFSTR), and the error address register (IT1STEADR). ITSTCLR is a write-only register and is always read as 0.

This register is reset by any reset source.

Bit	31	30	29	28	27	26	25	24	23	22	21	20	19	18	17	16
	—	—	—	—	—	—	—	—	—	—	—	—	—	—	—	—
Value after reset	0	0	0	0	0	0	0	0	0	0	0	0	0	0	0	0
R/W	R	R	R	R	R	R	R	R	R	R	R	R	R	R	R	R

Bit	15	14	13	12	11	10	9	8	7	6	5	4	3	2	1	0
	—	—	—	—	—	—	—	—	—	—	—	—	—	—	—	STCLR0
Value after reset	0	0	0	0	0	0	0	0	0	0	0	0	0	0	0	0
R/W	R	R	R	R	R	R	R	R	R	R	R	R	R	R	R	W

Table 31.40 ITSTCLR Register Contents

Bit Position	Bit Name	Function
31 to 1	Reserved	When read, the value after reset is returned. When writing, write the value after reset.
0	STCLR0	Error Overflow Flag Clear Writing 1 to this bit clears the DEDF0 and SEDF0 flags in IT1STERSTR; ERROVF0 flag in ITOVFSTR; and IT1STEADR0.

(10) ITOVFSTR_PE1 — Instruction Cache Tag RAM Error Count Overflow Status Register (PE1)

ITOVFSTR monitors occurrence of error overflow in cache tag RAM. If the second error occurs after the first error (= while any of the error flags in the error status register is set), the flag in this register is set. However, if the second error is identical to the first error (both the source and address are same), this flag is not set. ERROVF is cleared by any reset source, or setting the STCLR bit to 1 in ITSTCLR.

Bit	31	30	29	28	27	26	25	24	23	22	21	20	19	18	17	16
	—	—	—	—	—	—	—	—	—	—	—	—	—	—	—	—
Value after reset	0	0	0	0	0	0	0	0	0	0	0	0	0	0	0	0
R/W	R	R	R	R	R	R	R	R	R	R	R	R	R	R	R	R

Bit	15	14	13	12	11	10	9	8	7	6	5	4	3	2	1	0
	—	—	—	—	—	—	—	—	—	—	—	—	—	—	—	ERROVF0
Value after reset	0	0	0	0	0	0	0	0	0	0	0	0	0	0	0	0
R/W	R	R	R	R	R	R	R	R	R	R	R	R	R	R	R	R

Table 31.41 ITOVFSTR Register Contents

Bit Position	Bit Name	Function
31 to 2	Reserved	When read, the value after reset is returned.
0	ERROVF0	Error Overflow Flag ERROVF0 is set if the second error occurs while any of the error flags (DEDF0 and SEDF0) in the error status register is set, except when both of the error address and source of the second error are the same as those of the first error.

(11) IT1STERSTR_PE1 — Instruction Cache Tag RAM 1st Error Status Register (PE1)

IT1STERSTR monitors occurrence of the first error in cache tag RAM.

The error status is set if an error is occurred while the error flag is 0. Also, if 2-bit ECC error is occurred while 1-bit ECC flag is set, error flag is overwritten. Please note that if 1-bit ECC error is occurred while DEDF0 is already set, SEDF0 is not set.

IT1STERSTR is cleared by any reset source, or setting the STCLR bit to 1 in ITSTCLR.

Bit	31	30	29	28	27	26	25	24	23	22	21	20	19	18	17	16
	—	—	—	—	—	—	—	—	—	—	—	—	—	—	—	—
Value after reset	0	0	0	0	0	0	0	0	0	0	0	0	0	0	0	0
R/W	R	R	R	R	R	R	R	R	R	R	R	R	R	R	R	R

Bit	15	14	13	12	11	10	9	8	7	6	5	4	3	2	1	0
	—	—	—	—	—	—	—	—	—	—	—	—	—	—	DEDF0	SEDF0
Value after reset	0	0	0	0	0	0	0	0	0	0	0	0	0	0	0	0
R/W	R	R	R	R	R	R	R	R	R	R	R	R	R	R	R	R

Table 31.42 IT1STERSTR Register Contents

Bit Position	Bit Name	Function
31 to 2	Reserved	When read, the value after reset is returned.
1	DEDF0	2-bit ECC Error Monitor Flag 0: Cleared to 0 by setting the STCLR0 bit to 1 in ITSTCLR. 1: Indicates that a 2-bit ECC error has occurred while the error flag DEDF0 is 0.
0	SEDF0	1-bit ECC Error Monitor Flag 0: Cleared to 0 by setting the STCLR0 bit to 1 in ITSTCLR. 1: Indicates that a 1-bit ECC error has occurred while the error flags DEDF0 and SEDF0 are 0.

(12) IT1STEADR0_PE1 — Instruction Cache Tag RAM 1st Error Address Register (PE1)

IT1STEADR holds the address at which an error has occurred in cache tag RAM. The error address is set if an error occurs while all the error flags for the relevant banks are 0 in IT1STERSTR. However, the address is not updated if 1-bit ECC error occurs during error flag of 1st error shows 1-bit ECC error. 2-bit ECC occurs, the address is updated. Once a 2-bit ECC error occurs, the address is not updated. Entry address is stored in EADRn[6:0] and way group number in EADRn[8]in this resister. Please note that EADRn[7] is always “0”. IT1STEADR is cleared by any reset source, or setting the STCLR bit to 1 in ITSTCLR.

Bit	31	30	29	28	27	26	25	24	23	22	21	20	19	18	17	16
	—	—	—	—	—	—	—	—	—	—	—	—	—	—	—	—
Value after reset	0	0	0	0	0	0	0	0	0	0	0	0	0	0	0	0
R/W	R	R	R	R	R	R	R	R	R	R	R	R	R	R	R	R

Bit	15	14	13	12	11	10	9	8	7	6	5	4	3	2	1	0
	—	—	—	—	—	—	—	EADR[8:0]								
Value after reset	0	0	0	0	0	0	0	0	0	0	0	0	0	0	0	0
R/W	R	R	R	R	R	R	R	R	R	R	R	R	R	R	R	R

Table 31.43 IT1STEADR0 Register Contents

Bit Position	Bit Name	Function
31 to 9	Reserved	When read, the value after reset is returned.
8 to 0	EADR[8:0]	1st Error Address Monitor the address of the first error. The error address is set if an error occurs while all the error flags are 0 in IT1STERSTR. However, the address is not updated if 1-bit ECC error occurs during error flag of 1st error shows 1-bit ECC error. 2-bit ECC occurs, the address is updated. Once a 2-bit ECC error or an address parity error occurs, the address is not updated.

31.2.5.4 Test Function

It is made possible to write arbitrary data to RAM data and ECC bits and directly read data from RAM data and ECC bits by using the cache instruction.

This instruction passes through the same encoding/decoding route as normal cache fill and instruction fetch. Therefore, both error injection and error check are enabled only by the above instruction.

For details, see the *RH850 Family User's Manual: Software.*

31.2.6 DTS RAM ECC

See **Section 7, DMA**.

31.2.6.1 Test Function

(1) Writing DTSRAM

Write values to DTSRAM. The ECC values corresponding to the written values are simultaneously written to the ECC bits.

(2) Reading the ECC bits

(a) Set the ECCTST bit of the DTSRAM test control register to 1 and enable ECC test mode.

(b) Read out DTSRAM being tested. The values of the ECC bits are stored in DTRTRDAT.

Exiting this test mode

(a) Set the ECCTST bit of the DTSRAM test control register to 0 to exit the test mode and return to the normal mode.

(3) Writing ECC bits

(a) Set the ECCTST bit of the DTSRAM test control register to 1 and enable ECC test mode.

(b) Write the values to DTRTWDAT which are desired to be written to the ECC bits.

(c) Set the DATSEL bit of the DTSRAM test control register to 1 to select DTRTWDAT as the one to specify data to be written to the ECC bits.

(d) Write data to DTSRAM being tested. The values in DTRTWDAT are written to the ECC bits.

Exiting this test mode

(a) Set the ECCTST bit of the DTSRAM test control register to 0 to exit the test mode and return to the normal mode.

31.2.7 ECC for Peripheral RAM (32 Bits)

31.2.7.1 Overview

This is an ECC module for the RAM of the following peripheral modules.

RS-CAN, FlexRay, CSIHn (n = 0 to 3)

Error detection and correction

Seven-bit ECC data is appended to the 32-bit RAM data.

This ECC circuit provides 2-bit ECC error detection and 1-bit ECC error detection and correction.

Enabling or disabling ECC error detection and correction

- ECC error detection can be either enabled or disabled.
- One-bit ECC error correction can be either enabled or disabled.
- If all the bits of RAM output data are stuck to 0 or 1, it is detected as a 2-bit ECC error.

Error notification

- Error notification is made to the ECM upon detection of a 2-bit ECC error (notification can be either enabled or disabled).
- Error notification is made to the ECM upon detection of a 1-bit ECC error (notification can be either enabled or disabled).

Once an error is notified to the ECM, another error notification is not made until the corresponding error status flag is cleared even if another ECC error is detected.

Error status

- Detection of 2- and 1-bit ECC errors can be monitored.
- Special registers are provided to clear error status.

Address capture

- Only one address at which an ECC error has occurred can be captured.
- A signal is generated upon detection of a 2-bit or a 1-bit ECC error, and the signal is used as a trigger to capture the error-causing address (when the first (1-bit or 2-bit) error is detected after the flag is cleared).

Testing function (Error injection)

- By setting the test mode, register values can be used as the data to be output to the RAM. When a peripheral module writes data to the RAM, the TED.ECEDB[31:0] register value can be written to the RAM. (The redundant bit is also generated from the TED.ECEDB[31:0] register value.) Furthermore, the redundant bit can be replaced with the TRC.ERDB[6:0] register value during data write to the RAM.
- By setting the test mode, the ECC redundant bit section can be latched when RAM data is read, and the value can be confirmed.
- By setting the test mode, the ECC redundant bit (encoding circuit) and syndrome code (decoding circuit), which are generated from the input data, can be confirmed.

31.2.7.2 List of Registers

(1) List of ECC Modules

The RAMs of the multiple peripheral functions are provided with the ECC modules. The following table shows the peripheral functions provided with the ECC modules, the corresponding ECC module names, and base addresses of the ECC modules.

Table 31.44 List of ECC Modules

Peripheral Functions		Symbol	ECC Module Names and Register Base Addresses	
			Module Name	Base Address <base_addr>
RS-CAN		ECCRCAN0	ECCRCAN0	FFC7 1000_H
FlexRay	Message RAM (MRAM)	ECCFLX0	ECCFLX0	FFC7 2000_H
	Temporary buffer (TBF A)	ECCFLX0T1	ECCFLX0T1	FFC7 2040_H
	Temporary buffer (TBF B)	ECCFLX0T0	ECCFLX0T0	FFC7 2080_H
CSIH	CSIH0	ECCCSIH0	ECCCSIH0	FFC7 0000_H
	CSIH1	ECCCSIH1	ECCCSIH1	FFC7 0040_H
	CSIH2	ECCCSIH2	ECCCSIH2	FFC7 0080_H
	CSIH3	ECCCSIH3	ECCCSIH3	FFC7 $00C0_H$

(2) List of Registers

Each ECC module has the registers shown in the following table.

Table 31.45 List of Registers

Register Name	Additional Abbreviation*2	R/W	Initial Value	Address	Access Size
ECC control register*1	CTL[17:16]	R/W	0000 $001X_H$	<base_addr>+00_H	32/16/8
ECC test mode control register	TMC	R/W	0000_H	<base_addr>+04_H	16/8
ECC redundant bit data control test register	TRC	R/W	0000 0000_H	<base_addr>+08_H	32
ECC encoder and decoder data test register	TED	R/W	0000 0000_H	<base_addr>+$0C_H$	32
ECC error address register	EAD0	R	0000 0000_H	<base_addr>+10_H	32

Note 1. The reset value of the LSB in the ECC control register is undefined.

Note 2. “Additional Abbreviation” is added to the symbol in the list of ECC modules that correspond to peripheral functions. For example, ECCCSIH2TMC represents the ECC test mode control register of CSIH2.

(3) Register Map

Table 31.46 Register Map

Abbreviation	31 24	23 16	15 8	7 0	Address
CTL	— (00_H)	CTL[17:16]	CTL[15:8]	CTL[7:0]	$nn00_H$
TMC	— (00_H)	— (00_H)	TMC[15:8]	TMC[7:0]	$nn04_H$
TRC	SYND[7:0]	HORD[7:0]	ECRD[7:0]	ERDB[7:0]	$nn08_H$
TED	ECEDB[31:24]	ECEDB[23:16]	ECEDB[15:8]	ECEDB[7:0]	$nn0C_H$
EAD0	ECEAD[31:24]	ECEAD[23:16]	ECEAD[15:8]	ECEAD[7:0]	$nn10_H$

31.2.7.3 Details of Registers

(1) CTL — ECC Control Register

The CTL register controls the mode of the ECC for target peripheral modules.

Bits 7, 5 to 3 should be set (written) while the target peripheral module operation is stopped.

Only the 32- or 16-bit manipulation instruction is valid for writing to bit 7.

This register is reset by any reset source.

Access This register can be read/written in 32/16/8-bit units.

Address See **Table 31.44, List of ECC Modules** and **Table 31.46, Register Map**.

Value after reset Undefined

Bit	31	30	29	28	27	26	25	24	23	22	21	20	19	18	17	16
	—	—	—	—	—	—	—	—	—	—	—	—	—	—	ECDEDF0	ECSEDF0
Value after reset	0	0	0	0	0	0	0	0	0	0	0	0	0	0	0	0
R/W	R	R	R	R	R	R	R	R	R	R	R	R	R	R	R	R

Bit	15	14	13	12	11	10	9	8	7	6	5	4	3	2	1	0
	EMCA[1:0]		—	—	—	ECER2C	ECER1C	—	ECTHM	—	EC1ECP	EC2EDIC	EC1EDIC	ECER2F	ECER1F	ECEMF
Value after reset	0	0	0	0	0	0	0	0	0	0	0	1	0	0	0	Undefined
R/W	R/W*1	R/W*1	R	R	R	R/W*1	R/W*1	R	R/W	R	R/W	R/W	R/W	R	R	R

Note 1. This bit is always read as 0.

Table 31.47 CTL Register Contents (1/2)

Bit Position	Bit Name	Function
31 to 18	Reserved	When read, the value after reset is returned. When writing, write the value after reset.
17	ECDEDF0	0: A bit error has not been found in EAD0 after a reset or after clearing the ECER2F or ECER1F bit. 1: A 2-bit error has been found at the address held in EAD0.
16	ECSEDF0	0: A bit error has not been found in EAD0 after a reset or after clearing the ECER2F or ECER1F bit. 1: A 1-bit error has been found at the address held in EAD0.
15 14	EMCA[1:0]	Access Control 1 and 0 to ECC Mode Selection Bit These bits specify whether updating the ECTHM bit (bit 7) is disabled or enabled. The value written to these bits is not retained. When these bits are read, the read value is always 0. When these bits are 01_B, writing to bit 7 is enabled.
13 to 12	Reserved	When read, the value after reset is returned. When writing, write the value after reset.
11	Reserved	When read, an undefined value is read. When writing, always write 0.
10	ECER2C	2-bit ECC Error Detection Flag Clear This bit is used to clear bit 2, the status flag (ECER2F). This bit is always read as 0. Write 1 to this bit while the ECER2F bit is set to clear the ECER2F bit. When a conflict between this bit writing and ECER2F bit setting occurs, writing to this bit has a priority.
9	ECER1C	1-bit ECC Error Detection Correction Accumulation Flag Clear This bit is used to clear bit 1, the status flag (ECER1F). This bit is always read as 0. Write 1 to this bit while the ECER1F bit is set to clear the ECER1F bit. When a conflict between this bit writing and ECER1F bit setting occurs, writing to this bit has a priority.

Table 31.47 CTL Register Contents (2/2)

Bit Position	Bit Name	Function
8	Reserved	When read, the value after reset is returned. When writing, write the value after reset.
7	ECTHM	ECC Function Through Mode Selection Set this bit to select whether to pass through the function of the ECC decoder. When writing to this bit, (0, 1) should be written to (EMCA[1:0]) at the same time. Set this bit to 1 to disable the ECC function. 0: Passing through mode is disabled (normal operation mode). 1: Passing through mode is enabled. The encoder is not affected. The decoder stops error detection and bit correction.
6	Reserved	When writing, write the value after reset.
5	EC1ECP	1-bit Error Correction Enable This bit specifies whether to enable or disable 1-bit error correction when the ECC error detection/correction is enabled. 0: When 1-bit error is detected, the error will be corrected. 1: When 1-bit error is detected, the error will not be corrected.
4	EC2EDIC	EC2EDIC 2-bit Error Detection Notification Enable This bit controls whether to notify it to ECM when 2-bit error is detected. 0: When 2-bit error is detected, it is not notified to ECM. 1: When 2-bit error is detected, it is notified to ECM.
3	EC1EDIC	EC1EDIC 1-Bit Error Detection Notification Enable This bit controls whether to notify it to ECM when a 1-bit error is detected. Setting 1 to this bit notifies a 1-bit error generation when a 1-bit error is detected. 0: When a 1-bit error is detected, it is not notified to ECM. 1: When a 1-bit error is detected, it is notified to ECM.
2	ECER2F	2-bit Error Detection Flag This flag indicates whether 2-bit error is detected during read access to the RAM when error determination is enabled. When 2-bit error interrupt is enabled and this flag is set, a 2-bit error interrupt signal is output. Write 1 to the ECER2C bit (bit 10) to clear the flag. If 2-bit error is detected again while this bit is set, an interrupt request signal will not be generated. 0: 2-bit error has not occurred since this bit was cleared. 1: 2-bit error has occurred.
1	ECER1F	1-bit Error Detection/correction Flag This flag indicates whether 1-bit error is detected during read access to the RAM when error determination is enabled. Write 1 to the ECER1C bit (bit 9) to clear the flag. 0: 1-bit error has not occurred since this bit was cleared. 1: 1-bit error has occurred.
0	ECEMF	ECC Error Message Flag This flag indicates whether an error exists in the current read data bus. This bit is updated whenever the RAM outputs data. Because the initial value of the RAM data is undefined, If the RAM is read before initialization, this bit may be set. 0: The current RAM output data does not have bit errors. 1: The current RAM output data have bit errors.

CAUTION

Bits 2 and 1 should be cleared when the ECC error message flag (ECEMF) is not set.
We recommend initializing the RAM before clearing bits 2 and 1.

(2) TMC — ECC Test Mode Control Register

The TMC register is used to switch to the test mode, and this register is for test mode.

When writing to bit 7, ETMA[1:0] need to be 10_B.

This register is reset by any reset source.

Access This register can be read/written in 16-bit units.

Address See **Table 31.44, List of ECC Modules** and **Table 31.46, Register Map**.

Value after reset 0000_H

Bit	15	14	13	12	11	10	9	8	7	6	5	4	3	2	1	0
	ETMA[1:0]		—	—	—	—	—	—	ECTMCE	—	—	ECTRRS	ECREOS	ECENS	ECDCS	ECREIS
Value after reset	0	0	0	0	0	0	0	0	0	0	0	0	0	0	0	0
R/W	R/W*1	R/W*1	R	R	R	R	R	R	R/W	R	R	R/W	R/W	R/W	R/W	R/W

Note 1. This bit is always read as 0.

Table 31.48 TMC Register Contents (1/2)

Bit Position	Bit Name	Function
15 14	ETMA[1:0]	Access Control 1 and 0 to ECC Test Mode Bit These two bits specify whether updating the ECTMCE bit (bit 7) is disabled or enabled. The value written to these bits is not retained. When these bits are read, the read value is always 0. When these bits are 10_B, writing to bit 7 is enabled.
13 to 8	Reserved	When read, the value after reset is returned. When writing, write the value after reset.
7	ECTMCE	ECC Test Mode Enable This bit specifies whether to enable access to the test registers and test control bits. When writing to this bit, (1, 0) should be written to (ETMA[1:0]) at the same time. 0: Access to the test mode registers and bits is disabled. 1: Access to the test mode registers and bits is enabled.
6, 5	Reserved	When read, the value after reset is returned. When writing, write the value after reset.
4	ECTRRS	ECC RAM Read Test Mode Selection This bit is used to generate a RAM read cycle. Writing to this bit is enabled only when ECTMCE = 1 (can be set simultaneously). This bit is cleared when ECTMCE = 0 (cleared synchronously). 0: A RAM read cycle is not generated even when TED is read. 1: A RAM read cycle is generated when TED is read. In addition, the TED read value depends on the ECDCS bit (bit 1). The ERDB read value depends on the ECREIS bit (bit 0).
3	ECREOS	ECC Redundant Bit Output Data Selection This bit specifies which is output to the ECC redundant bit output, the ECC encoder output data or the value of the ERDB register. Writing to this bit is enabled only when ECTMCE = 1 (can be set simultaneously). This bit is cleared when ECTMCE = 0 (cleared synchronously). 0: Encoding result is output to the ECC redundant bit output. 1: TRC.ERDB[6:0] is output to the ECC redundant bit output.
2	ECENS	ECC Encoder Input Selection This bit selects data value from the peripheral function or TED.ECEDB[31:0] value as data to be written to the RAM. Write access to this bit is enabled only when ECTMCE = 1 (simultaneous setting possible). This bit is cleared by setting ECTMCE to 0 (synchronous clear). 0: Write data from the peripheral function is input to the RAM data area and ECC encoder input data. 1: The TED.ECEDB[31:0] value is input to the RAM data area and ECC encoder input data.

Table 31.48 TMC Register Contents (2/2)

Bit Position	Bit Name	Function
1	ECDCS	ECC decoder input selection bit This bit specifies which is input to the decoder as the lower 32-bit data of the decoder input, the lower 32-bit data from RAM or the value of TED.ECEDB[31:0]. Writing to this bit is enabled only when ECTMCE = 1 (can be set simultaneously). This bit is cleared when ECTMCE = 0 (cleared synchronously). 0: The lower 32-bit data from the RAM is input to the data area (lower 32-bit data) to the decoder circuit. 1: TED.ECEDB[31:0] is input to the data area to the decoder circuit.
0	ECREIS	ECC Redundant Bit Input Data Selection This bit specifies which is input as the upper 7-bit data of the decoder input, the upper 7-bit data (redundant bit area) from the RAM or the value of the TRC.ERDB[6:0]. Writing to this bit is enabled only when ECTMCE = 1 (can be set simultaneously). This bit is cleared when ECTMCE = 0 (cleared synchronously). 0: Upper 7 bits of RAM output data are input to the ECC redundant bit area to the decoder circuit. 1: The TRC.ERDB[6:0] value is input to the ECC redundant bit area to the decoder circuit.

(3) TED — ECC Encoder and Decoder Data Test Register

TED is a test register for 32-bit data for ECC encoding/decoding.

In test mode, the value of this register can be used as input data for the encoder or decoder circuit.

This register is reset by any reset source.

Access When TMC.ECTMCE = 1, this register can be read/written in 32-bit units.
When TMC.ECTMCE = 0, the value of this register is always $0000\ 0000_H$.

Address See **Table 31.44, List of ECC Modules** and **Table 31.46, Register Map**.

Value after reset $0000\ 0000_H$

Bit	31	30	29	28	27	26	25	24	23	22	21	20	19	18	17	16
	ECEDB[31:16]															
Value after reset	0	0	0	0	0	0	0	0	0	0	0	0	0	0	0	0
R/W	R/W	R/W	R/W	R/W	R/W	R/W	R/W	R/W	R/W	R/W	R/W	R/W	R/W	R/W	R/W	R/W

Bit	15	14	13	12	11	10	9	8	7	6	5	4	3	2	1	0
	ECEDB[15:0]															
Value after reset	0	0	0	0	0	0	0	0	0	0	0	0	0	0	0	0
R/W	R/W	R/W	R/W	R/W	R/W	R/W	R/W	R/W	R/W	R/W	R/W	R/W	R/W	R/W	R/W	R/W

Table 31.49 TED Register Contents

Bit position	Bit Name	Function
31 to 0	ECEDB[31:0]	When TMC.ECENS = 1, the value of this register is used as the write data to the RAM data area and input data to the encoder circuit. When TMC.ECDCS = 1, the value of this register is used as the bit 31-0 of the input data to the decoder circuit. In addition, when TMC.ECTRRS = 1, the read value from this register switches from the value of this register to the RAM output data.

(4) TRC — ECC Redundant Bit Data Control Test Register

This register is a 32-bit test register for the ECC redundant bit area and consists of four 8-bit registers, SYND, HORD, ECRD, and ERDB.

This register is reset by any reset source.

Access When TMC.ECTMCE = 1, this register can be read/written in 32-bit units.
When TMC.ECTMCE = 0, the value of this register is always 0000 0000_H.

Address See **Table 31.44, List of ECC Modules** and **Table 31.46, Register Map**.

Value after reset $0000\ 0000_H$

Bit	31	30	29	28	27	26	25	24	23	22	21	20	19	18	17	16
	SYND (See **(5)**)								HORD (See **(6)**)							
Value after reset	0	0	0	0	0	0	0	0	0	0	0	0	0	0	0	0
R/W	R	R	R	R	R	R	R	R	R	R	R	R	R	R	R	R

Bit	15	14	13	12	11	10	9	8	7	6	5	4	3	2	1	0
	ECRD (See **(7)**)								ERDB (See **(8)**)							
Value after reset	0	0	0	0	0	0	0	0	0	0	0	0	0	0	0	0
R/W	R	R	R	R	R	R	R	R	R/W	R/W	R/W	R/W	R/W	R/W	R/W	R/W

(5) SYND — ECC Decoder Syndrome Data Register

SYND is a read-only register to confirm the syndrome code generated by the decoding circuit in test mode (ECTMCE = 1).

Write access to SYND is ignored.

This register is reset by any reset source.

Access When TMC.ECTMCE = 1, this register can be read only in 8-bit units.
When TMC.ECTMCE = 0, the value of this register is always 00_H.

Address See **Table 31.44, List of ECC Modules** and **Table 31.46, Register Map**.

Value after reset 00_H

Bit	7	6	5	4	3	2	1	0
	—	SYND6	SYND5	SYND4	SYND3	SYND2	SYND1	SYND0
Value after reset	0	0	0	0	0	0	0	0
R/W	R	R	R	R	R	R	R	R

Table 31.50 SYND Register Contents

Bit position	Bit Name	Function
7	Reserved	When read, the value after reset is returned.
6 to 0	SYND[6:0]	When reading this register bits, the syndrome code (synd[6:0]) generated in the decoder circuit based on the input data can be read. The value of this register changes as the input data changes. Note that this register is enabled only when ECTMCE = 1, and the value is always 00_H when ECTMCE = 0.

(6) HORD — ECC 7-Bit Redundant Data Holding Test Register

HORD holds the 7-bit ECC redundant area (upper 7-bit RAM data), which cannot be confirmed by the peripheral module, when the peripheral module accesses the RAM for reading in test mode (ECTMCE = 1).

This register is reset by any reset source.

Access When TMC.ECTMCE = 1, this register can be read only in 8-bit units.
When TMC.ECTMCE = 0, the value of this register is always 00_H.

Address See **Table 31.44, List of ECC Modules** and **Table 31.46, Register Map**.

Value after reset 00_H

Bit	7	6	5	4	3	2	1	0
	—	HORD6	HORD5	HORD4	HORD3	HORD2	HORD1	HORD0
Value after reset	0	0	0	0	0	0	0	0
R/W	R	R	R	R	R	R	R	R

Table 31.51 HORD Register Contents

Bit position	Bit Name	Function
7	Reserved	When read, the value after reset is returned.
6 to 0	HORD[6:0]	When the peripheral module reads the RAM in test mode (ECTMCE = 1), this register fetches the upper 7 bits of the RAM output data at the rising edge of the operating clock. In addition, if TMC.ECTRRS = 1, the value of the RAM output data is fetched to this register at the timing when the ECEDB[15:0] register is read. Note that the value of this register is only valid when ECTMCE = 1; it is always 00_H when ECTMCE = 0.

(7) ECRD — ECC Encoder Test Register

ECRD is a read-only register to read the 7-bit redundant section generated by the encoding circuit in test mode (ECTMCE = 1).

This register is reset by any reset source.

Access When TMC.ECTMCE = 1, this register can be read in 8-bit units.
When TMC.ECTMCE = 0, the value of this register is always 00_H.

Address See **Table 31.44, List of ECC Modules** and **Table 31.46, Register Map**.

Value after reset 00_H

Bit	7	6	5	4	3	2	1	0
	—	ECRD6	ECRD5	ECRD4	ECRD3	ECRD2	ECRD1	ECRD0
Value after reset	0	0	0	0	0	0	0	0
R/W	R	R	R	R	R	R	R	R

Table 31.52 ECRD Register Contents

Bit position	Bit Name	Function
7	Reserved	When read, the value after reset is returned.
6 to 0	ECRD[6:0]	ECRD is used to check the redundant bit generated from the input data from the peripheral module. The read value is the encoding result (ecc[6:0]), and not the ECC redundant bit output value. Note that the value of this register is only valid when ECTMCE = 1; it is always 00H when ECTMCE = 0.

(8) ERDB — ECC Redundant Bit Input and Output Substitution Buffer Register

ERDB is a buffer register for the data that substitutes for the input and output data for the 7-bit ECC redundant data area in test mode (ECTMCE = 1).

ECERDB can be read and written to in ECC test mode (ECTMCE = 1).

This register is reset by any reset source.

Access When TMC.ECTMCE = 1, this register can be read/written in 8-bit units.
When TMC.ECTMCE = 0, the value of this register is always 00_H.

Address See **Table 31.44, List of ECC Modules** and **Table 31.46, Register Map**.

Value after reset 00_H

Bit	7	6	5	4	3	2	1	0
	—	ERDB6	ERDB5	ERDB4	ERDB3	ERDB2	ERDB1	ERDB0
Value after reset	0	0	0	0	0	0	0	0
R/W	R	R/W	R/W	R/W	R/W	R/W	R/W	R/W

Table 31.53 ERDB Register Contents

Bit position	Bit Name	Function
7	Reserved	When read, the value after reset is returned. When writing, write the value after reset.
6 to 0	ERDB[6:0]	When ECREOS = 1, the value of this resister is output to the ECC redundant bit output pins and sent to the RAM instead of the 7-bit long redundant bits generated by the encoder circuit. When ECREIS = 1, the value of this register is used by the decoder circuit instead of the upper 7 bits of the data input to the decoder circuit. In addition, when ECTRRS = 1, the read value from this register switches from the written value to this register to the RAM output data.

(9) EAD0 — ECC Error Address Register

EAD0 is a read-only register to hold the address at which an ECC error has occurred.

This register is reset by any reset source.

Access This register can be read in 32-bit units.

Address See **Table 31.44, List of ECC Modules** and **Table 31.46, Register Map**.

Value after reset $0000\ 0000_H$

Bit	31	30	29	28	27	26	25	24	23	22	21	20	19	18	17	16
	ECEAD[31:16]															
Value after reset	0	0	0	0	0	0	0	0	0	0	0	0	0	0	0	0
R/W	R	R	R	R	R	R	R	R	R	R	R	R	R	R	R	R

Bit	15	14	13	12	11	10	9	8	7	6	5	4	3	2	1	0
	ECEAD[15:0]															
Value after reset	0	0	0	0	0	0	0	0	0	0	0	0	0	0	0	0
R/W	R	R	R	R	R	R	R	R	R	R	R	R	R	R	R	R

Table 31.54 EAD0 Register Contents

Bit position	Bit Name	Function
31 to 0	ECEAD[31:0]	EAD0 is a read-only register to hold the address at which an ECC error has occurred. If an ECC error is detected while ECC error detection is enabled, the RAM address is latched using the detection signal as a trigger, and the address is stored in EAD0 as the address at which the ECC error has occurred. The address is stored upon detection of the first ECC error while no error status is set. However, if a 1-bit error is followed by a 2-bit error, the address of the latter is stored. Only one address can be held in EAD0.

If an ECC error has occurred in the internal RAM of CSIH, RS-CAN, or Flexray, this register holds the address at which the error has occurred as described below.

CSIH

[31:7] Reserved bits

[6:0] Depending on the mode selected when an ECC error occurred, the following values are stored in these bits.

- FIFO mode

  An ECC error occurred during transfer: the values in TRWA[6:0]
  An ECC error occurred during reception: the values in RRA[6:0]

- Dual buffer mode

  An ECC error occurred during transfer: the values in {1'b0, TRWA[5:0]}
  An ECC error occurred during reception: the values in {1'b1, RRA[5:0]}

- Transmit-only buffer mode

  The values in TRWA[6:0]

RS-CAN

[31:11] Reserved bits
[10:0] Depending on area of the RAM where an ECC error has occurred, the following values are stored in these bits.

- 000_H to $2FF_H$: reception table

  If an ECC error has occurred in this area, the following values are stored.
  [10:6] Page number
  [5:2] Receive rule number
  [1:0] 00: GAFLIDx, 01: GAFLMx, 10: GAFLP0x, 11: GAFLP1x

- 300_H to $5FF_H$: receive buffer, receive FIFO buffer, transmit and receive FIFO buffer

  If an ECC error has occurred in this area, the values are stored in accordance with the settings of RMNB, RFCC, and CFCC. Areas are secured in the RAM for RXMB, RXFIFO and COMFIFO in this order without leaving empty spaces between each buffer. The values of RXMB are stored in the order of RMID, RMPTR, RMDF0, and RMDF1. The values of RXFIFO and COMFIFO are stored in the order of ID, PTR, DF0, and DF1, by each message.

- 600_H to $68F_H$: Transmit buffer

  If an ECC error has occurred in this area, the following values are stored.

  [10:8] Fixed to 110
  [7:2] Transmit buffer number
  [1:0] 00: TMID, 01: TMPTR, 10: TMDF0, 11: TMDF1

- $6C0_H$ to $6EF_H$: transmit history

  If an ECC has error occurred in this area, the number of transmit history buffer are stored.

- $6F0_H$ to $71F_H$: reserved

  This is a temporary area used by the RS-CAN.

Flexray

- Message RAM

  [31:11] Reserved bits
  [10:0] The values are stored as follows.

  If an ECC error has occurred, respective word number (header MB0 = word number 0) is stored. For the words of the message RAM, see **Section 18.3.13, Message RAM**.

- TBFRAM (TBF A/B)

  [31:7] Reserved bits
  [6:0] The values are stored as follows.

  If an ECC error has occurred in TBF Rx, 00_H to $3F_H$ are stored.
  If an ECC error has occurred in TBF Tx, 40_H to $7F_H$ are stored.
  For TBF, see **Section 18.3.12.3, FlexRay Protocol Controller Access to Message RAM**.

31.2.7.4 Notification to ECM

This module can output two interrupt signals through programming. The output is connected to the ECM. However, to notify ECM, each of CSIH, RS-CAN and Flexray need to access own RAM. When RAM output data read using TED register, notification to ECM will not occur.

- 1-bit error notification

  The 1-bit error interrupt is output when an error is detected at one bit in bits 0 to 38 of the data read from the RAM during RAM read access while error detection is enabled, 1-bit error detection notification is enabled (EC1EDIC = 1B), and neither ECER1F nor ECER2F is set.

- 2-bit error notification

  The 2-bit error interrupt is output when an error is detected at two bits in bits 0 to 38 of the data read from the RAM during RAM read access while error detection is enabled, 2-bit error detection notification is enabled (EC2EDIC = 1B), and ECER2F is not set.

31.2.7.5 Test Function

(1) Writing RAM data

Write data to the peripheral RAM. However, ECC corresponding to the write data is simultaneously written to the ECC bits. To write an arbitrary value to the ECC bits, use ECC test mode shown in (3).

(2) Reading RAM data

(a) Set the ECTHM bit in the ECC control register to 1 to disable ECC error detection/correction.

(b) Read the peripheral RAM data. The RAM data is directly read because error detection or correction is not made during reading.

Exiting this test mode

(a) Set the ECTHM bit in the ECC control register to 0 to enable ECC error detection/correction.

(3) Writing ECC bits

(a) Set the ECTMCE bit in the ECC test mode control register to 1 to specify ECC test mode.

(b) Write a value to be written to the ECC bits to TRC.ERDB[6:0].

(c) Set the ECREOS bit in the ECC test mode control register to 1 to select TRC.ERDB[6:0] to be written to the ECC bits.

(d) When data is written to the peripheral RAM, the TRC.ERDB[6:0] value is written to the ECC bits.

Exiting this test mode

(a) Set the ECTMCE bit in the ECC test mode control register to 0 to specify normal mode.

(4) Reading ECC bits

(a) Set the ECTMCE bit in the ECC test mode control register to 1 to specify ECC test mode.

(b) When the peripheral RAM data is read, the value of the ECC bits is stored in TRC.HORD[6:0].

Exiting this test mode

(a) Set the ECTMCE bit in the ECC test mode control register to 0 to specify normal mode.

31.2.8 Data Parity for Data Transfer Paths

The following shows the transfer paths to which data parity is applied. Data parity errors can be detected during data transfer from the access sources to destinations shown below. If a parity error is detected in any of the paths, the error is notified to the ECM.

Access Source (Master)	Access Destination (Slave)
CPU1, DMAC, DTS	INTC2, DMA, DTS, ADC, TSG3, TAUJ, TAUD, OSTM, ENCA, CSIG, CSIH, SENT, PSI5
DMAC, DTS	CPU1 local RAM

Some of the parity-applied modules have the control registers in the parity controllers (encoder and decoder), which can enable or disable parity detection and hold status upon detection of an error. If a parity error is detected in these modules, it is possible to identify the access that caused the error.

On the other hand, parity controllers which do not have control registers always perform parity detection. Though the status upon detection of an error is not retained in these controllers, whether an error has been detected or not is retained in the ECM.

31.2.8.1 List of Registers

Table 31.55 List of Registers

Address	Symbol	Register Name	R/W	Value after Reset	Access Size
<Base_addr> + 0_H	APDPERRST_xx	P-Bus data parity status register xx	R	$0000\ 0000_H$	8/16/32
<Base_addr> + 4_H	APDPERRSTC_xx	P-Bus data parity status clear register xx	W	$0000\ 0000_H$	8/16/32
<Base_addr> + 8_H	APDPTMC_xx	P-Bus data parity test mode control register xx	R/W	$0000\ 0000_H$	16/32
<Base_addr> + C_H	APDPERRADR_xx	P-Bus data parity error address register xx	R	$0000\ 0000_H$	32

The symbol xx in the above table indicates a parity-applied module for which the control register is provided. **Table 31.56** shows the parity-applied modules and base addresses.

Table 31.56 List of Data Parity Control Modules (1/2)

Module to which parity is applied	xx	<base_addr>
INTC2	INTC2	$FFC6\ 8800_H$
DMA_DTS	PDMA	$FFC6\ 8900_H$
ADC0	ADCTL00	$FFC8\ 0000_H$
ADC1	ADCTL10	$FFC8\ 0010_H$
TSG30	TSG30	$FFDC\ A120_H$
TSG31	TSG31	$FFDC\ A130_H$
TAUJ0	TAUJ0	$FFDC\ A0F0_H$
TAUJ1	TAUJ1	$FFDC\ A100_H$
TAUJ2	TAUJ2	$FFDC\ A110_H$
TAUD0	TAUD0	$FFDC\ A0C0_H$
TAUD1	TAUD1	$FFDC\ A0D0_H$
TAUD2	TAUD2	$FFDC\ A0E0_H$
OSTM0	OSTM00	$FFDC\ A020_H$
OSTM1	OSTM10	$FFDC\ A030_H$
OSTM3	OSTM30	$FFF9\ 6000_H$
OSTM4	OSTM40	$FFF9\ 6010_H$

Table 31.56 List of Data Parity Control Modules (2/2)

Module to which parity is applied	xx	<base_addr>
OSTM5	OSTM50	FFF9 6020_H
OSTM6	OSTM60	FFF9 6030_H
OSTM7	OSTM70	FFF9 6040_H
OSTM_CLKSEL	OSTM_CLKSEL	FFDC $A140_H$
ENCA0	ENCA00	FFDC $A000_H$
ENCA1	ENCA10	FFDC $A010_H$
CSIG0 (group A)	CSIG0	FFF9 6090_H
CSIG0 (group B)	CHBB0	FFF9 $60A0_H$
CSIH0 (group A)	CSIH00	FFF9 6050_H
CSIH0 (group B)	CHBA0	FFF9 $60B0_H$
CSIH1 (group A)	CSIH10	FFF9 6060_H
CSIH1 (group B)	CHBA1	FFF9 $60C0_H$
CSIH2 (group A)	CSIH20	FFF9 6070_H
CSIH2 (group B)	CHBA2	FFF9 $60D0_H$
CSIH3 (group A)	CSIH30	FFF9 6080_H
CSIH3 (group B)	CHBA3	FFF9 $60E0_H$
SENT0	SENT00	FFDC $A060_H$
SENT1	SENT10	FFDC $A070_H$
SENT2	SENT20	FFDC $A080_H$
SENT3	SENT30	FFDC $A090_H$
SENT4	SENT40	FFDC $A0A0_H$
SENT5	SENT50	FFDC $A0B0_H$
PSI50	PSI50	FFDC $A040_H$
PSI51	PSI51	FFDC $A050_H$

Note 1. The CSIGx registers are divided into the following two groups and controlled separately.
Group A: CSIGnCTL0 to CSIGnCTL2, CSIGnSTR0, and CSIGnSTCR0
Group B: Other than above.

Note 2. The CSIHx registers are divided into the following two groups and controlled separately.
Group A: CSIHnCTL0 to CSIHnCTL2, CSIHnSTR0, and CSIHnSTCR0
Group B: Other than above.

31.2.8.2 Details of Registers

(1) APDPERRST_xx — P-Bus Data Parity Status Register

This register reflects the error status when a parity error occurs while writing data to a parity-applied module. For the symbol xx, see **Table 31.56, List of Data Parity Control Modules**.

This register is reset by any reset source.

Bit	31	30	29	28	27	26	25	24	23	22	21	20	19	18	17	16
	—	—	—	—	—	—	—	—	—	—	—	—	—	—	—	—
Value after reset	0	0	0	0	0	0	0	0	0	0	0	0	0	0	0	0
R/W	R	R	R	R	R	R	R	R	R	R	R	R	R	R	R	R

Bit	15	14	13	12	11	10	9	8	7	6	5	4	3	2	1	0
	—	—	—	—	—	—	—	—	—	—	—	—	—	—	—	APDPERR
Value after reset	0	0	0	0	0	0	0	0	0	0	0	0	0	0	0	0
R/W	R	R	R	R	R	R	R	R	R	R	R	R	R	R	R	R

Table 31.57 APDPERRST Register Contents

Bit Position	Bit Name	Function
31 to 1	Reserved	When read, the value after reset is returned.
0	APDPERR	D-Parity Error Monitor Flag Indicates occurrence of the parity error. APDPERR is cleared by setting the D-Parity error monitor flag clear bit (APDPERRC) to 1. 0: Indicates that a parity error has not occurred. 1: Indicates that a parity error has occurred.

CAUTION

Insert a SYNCM after the instruction to clear a flag by APDPERRC_xx, when APDPERR is read to confirm that the flag has been cleared by APDPERRC_xx. Otherwise, a flag before being cleared might be read.

(2) APDPERRSTC_xx — P-Bus Data Parity Status Clear Register

For the symbol xx, see **Table 31.56, List of Data Parity Control Modules**.

This register is reset by any reset source.

Bit	31	30	29	28	27	26	25	24	23	22	21	20	19	18	17	16
	—	—	—	—	—	—	—	—	—	—	—	—	—	—	—	—
Value after reset	0	0	0	0	0	0	0	0	0	0	0	0	0	0	0	0
R/W	R	R	R	R	R	R	R	R	R	R	R	R	R	R	R	R

Bit	15	14	13	12	11	10	9	8	7	6	5	4	3	2	1	0
	—	—	—	—	—	—	—	—	—	—	—	—	—	—	—	APDPERRC
Value after reset	0	0	0	0	0	0	0	0	0	0	0	0	0	0	0	0
R/W	R	R	R	R	R	R	R	R	R	R	R	R	R	R	R	W

Table 31.58 APDPERRSTC Register Contents

Bit Position	Bit Name	Function
31 to 1	Reserved	When read, the value after reset is returned. When writing, write the value after reset.
0	APDPERRC	Clears the D-Parity error monitor flag (APDPERR). Writing 1 to this bit with the APDPERR bit set clears APDPERR. This bit is always read as 0.

(3) APDPTMC_xx — P-Bus Data Parity Test Mode Control Register

For the symbol xx, see **Table 31.56, List of Data Parity Control Modules**.

This register is reset by any reset source.

Bit	31	30	29	28	27	26	25	24	23	22	21	20	19	18	17	16
	—	—	—	—	—	—	—	—	—	—	—	—	—	—	—	—
Value after reset	0	0	0	0	0	0	0	0	0	0	0	0	0	0	0	0
R/W	R	R	R	R	R	R	R	R	R	R	R	R	R	R	R	R

Bit	15	14	13	12	11	10	9	8	7	6	5	4	3	2	1	0
	APDPTMC[1:0]		—	—	—	—	—	—	—	—	—	—	APDPEIC3	APDPEIC2	APDPEIC1	APDPEIC0
Value after reset	0	0	0	0	0	0	0	0	0	0	0	0	0	0	0	0
R/W	R/W	R/W	R	R	R	R	R	R	R	R	R	R	R/W	R/W	R/W	R/W

Table 31.59 APDPTMC Register Contents

Bit Position	Bit Name	Function
31 to 16	Reserved	When read, the value after reset is returned. When writing, write the value after reset.
15, 14	APDPTMC[1:0]	D-Parity Test Mode Control Setting APDPTMC[1:0] to 01B enables write-accesses to the error insertion control bits 3 to 0 (APDPEIC3 to APDPEIC0). When APDPTMC[1:0] are not 01B, APDPEIC3 to APDPEIC0 are not written to even though a write-access is attempted. These bits are always read as 0.
13 to 4	Reserved	When read, the value after reset is returned. When writing, write the value after reset.
3	APDPEIC3	Byte-Lane 3 Error Insertion Control Changes the type of the parity bit generation and check for byte-lane 3 (bits 31 to 24) to odd parity. APDPEIC3 can be written to when APDPTMC[1:0] = 01B. 0: Parity bit generation and check is performed with even parity. 1: Parity bit generation and check is performed with odd parity. (Error insertion)
2	APDPEIC2	Byte-Lane 2 Error Insertion Control Changes the type of the parity bit generation and check for byte-lane 2 (bits 23 to 16) to odd parity. APDPEIC2 can be written to when APDPTMC[1:0] = 01B. 0: Parity bit generation and check is performed with even parity. 1: Parity bit generation and check is performed with odd parity. (Error insertion)
1	APDPEIC1	Byte-Lane 1 Error Insertion Control Changes the type of the parity bit generation and check for byte-lane 1 (bits 15 to 8) to odd parity. APDPEIC1 can be written to when APDPTMC[1:0] = 01B. 0: Parity bit generation and check is performed with even parity. 1: Parity bit generation and check is performed with odd parity. (Error insertion)
0	APDPEIC0	Byte-Lane 0 Error Insertion Control Changes the type of the parity bit generation and check for byte-lane 0 (bits 7 to 0) to odd parity. APDPEIC0 can be written to when APDPTMC[1:0] = 01B. 0: Parity bit generation and check is performed with even parity. 1: Parity bit generation and check is performed with odd parity. (Error insertion)

(4) APDPERRADR_xx — P-Bus Data Parity Error Address Register

This register reflects the error status when a parity error occurs while writing data to a parity-applied module. For the symbol xx, see **Table 31.56, List of Data Parity Control Modules**.

This register is reset by any reset source.

Bit	31	30	29	28	27	26	25	24	23	22	21	20	19	18	17	16
	APDPERRADR[31:16]															
Value after reset	0	0	0	0	0	0	0	0	0	0	0	0	0	0	0	0
R/W	R	R	R	R	R	R	R	R	R	R	R	R	R	R	R	R

Bit	15	14	13	12	11	10	9	8	7	6	5	4	3	2	1	0
	APDPERRADR[15:0]															
Value after reset	0	0	0	0	0	0	0	0	0	0	0	0	0	0	0	0
R/W	R	R	R	R	R	R	R	R	R	R	R	R	R	R	R	R

Table 31.60 APDPERRADR Register Contents

Bit Position	Bit Name	Function
31 to 0	APDPERRADR [31:0]	D-Parity Error Address Holds the address at which the first parity error has occurred while the D-Parity error monitor flag (APDPAERR) is not set. The retained information is not updated even though another parity error occurs again while APDPERR is set.

31.2.9 Usage Notes

Since the initial values in the on-chip RAM are undefined, reading the RAM without initializing it may lead to an ECC error. Accordingly, we recommend initializing the whole on-chip RAM (use any desired setting).

31.3 Lockstep

This product incorporates the CPU1 with the lockstep function to quickly detect CPU failures without special software. The CPU1 executes the program using two different cores, that is, master core and checker core, and constantly compares the execution results of the two cores. When the results do not agree, the CPU1 determines that an error has occurred in one of the cores, and notifies it to the ECM.

The lockstep function of the CPU1 features failure insertion, with which errors can be intentionally caused and thus self-diagnosis of the lockstep operation is possible.

31.3.1 List of Registers

Table 31.61 List of Registers

Address	Symbol	Register Name	R/W	Value after Reset	Access Size
FFFE ED00$_H$	TESTCOMPREG0	Comparator test register 0	R/W	0000 0000$_H$	8/16/32
FFFE ED04$_H$	TESTCOMPREG1	Comparator test register 1	R/W	0000 0000$_H$	8/16/32
FFC4 CA00$_H$	PDMA_COMP_CNTRL	DMA control register	R/W	0000 0000$_H$	32

These registers are placed in the CPU Peripheral of the CPU1. These registers can only be accessed by the CPU1.

31.3.2 Details of Registers

31.3.2.1 TESTCOMPREG0 — Comparator Test Register 0

TESTCOMPREG0 is test register 0 used for the lockstep function of the CPU1.

Combining TESTCOMPREG0 with TESTCOMPREG1 enables self-diagnosis of the lockstep function. This register is reset by any reset source. The following gives an example of self-diagnosis procedure.

(1) Write arbitrary value to TESTCOMPREG0.

(2) Write a different value to TESTCOMPREG1.

(3) Read TESTCOMPREG0. The different values are read and sent to the master core and checker core.

(4) Using the values read, run the comparator to be diagnosed.

Bit	31	30	29	28	27	26	25	24	23	22	21	20	19	18	17	16
	TESTCOMPREG0[31:16]															
Value after reset	0	0	0	0	0	0	0	0	0	0	0	0	0	0	0	0
R/W	R/W	R/W	R/W	R/W	R/W	R/W	R/W	R/W	R/W	R/W	R/W	R/W	R/W	R/W	R/W	R/W

Bit	15	14	13	12	11	10	9	8	7	6	5	4	3	2	1	0
	TESTCOMPREG0[15:0]															
Value after reset	0	0	0	0	0	0	0	0	0	0	0	0	0	0	0	0
R/W	R/W	R/W	R/W	R/W	R/W	R/W	R/W	R/W	R/W	R/W	R/W	R/W	R/W	R/W	R/W	R/W

Table 31.62 TESTCOMPREG0 Register Contents

Bit Position	Bit Name	Function
31 to 0	TESTCOMPREG0[31:0]	Write: Data is written to each byte. Read: PE1: TESTCOMPREG0[31:0] value is read. PE1C: TESTCOMPREG1[31:0] value is read.

31.3.2.2 TESTCOMPREG1 — Comparator Test Register 1

TESTCOMPREG1 is test register 1 used for the lockstep function of the CPU1.

Combining TESTCOMPREG1 with TESTCOMPREG0 enables self-diagnosis of the lockstep function.

This register is reset by any reset source.

Bit	31	30	29	28	27	26	25	24	23	22	21	20	19	18	17	16
	TESTCOMPREG1[31:16]															
Value after reset	0	0	0	0	0	0	0	0	0	0	0	0	0	0	0	0
R/W	R/W	R/W	R/W	R/W	R/W	R/W	R/W	R/W	R/W	R/W	R/W	R/W	R/W	R/W	R/W	R/W

Bit	15	14	13	12	11	10	9	8	7	6	5	4	3	2	1	0
	TESTCOMPREG1[15:0]															
Value after reset	0	0	0	0	0	0	0	0	0	0	0	0	0	0	0	0
R/W	R/W	R/W	R/W	R/W	R/W	R/W	R/W	R/W	R/W	R/W	R/W	R/W	R/W	R/W	R/W	R/W

Table 31.63 TESTCOMPREG1 Register Contents

Bit Position	Bit Name	Function
31 to 0	TESTCOMPREG1[31:0]	Write: Data is written to each byte. Read: PE1: TESTCOMPREG1[31:0] value is read. PE1C: TESTCOMPREG0[31:0] value is read.

31.3.2.3 PDMA_COMP_CNTRL — DMA Control Register

This register (PDMA_COMP_CNTRL) can control the output signals on the checker side of the DMAC.

A DMA comparison error can be immediately generated by setting this register.

This register is reset by any reset source.

Bit	31	30	29	28	27	26	25	24	23	22	21	20	19	18	17	16
	PROT[1:0]		DMACMPERR[29:16]													
Value after reset	0	0	0	0	0	0	0	0	0	0	0	0	0	0	0	0
R/W	R/W	R/W	R/W	R/W	R/W	R/W	R/W	R/W	R/W	R/W	R/W	R/W	R/W	R/W	R/W	R/W

Bit	15	14	13	12	11	10	9	8	7	6	5	4	3	2	1	0
	DMACMPERR[15:0]															
Value after reset	0	0	0	0	0	0	0	0	0	0	0	0	0	0	0	0
R/W	R/W	R/W	R/W	R/W	R/W	R/W	R/W	R/W	R/W	R/W	R/W	R/W	R/W	R/W	R/W	R/W

Table 31.64 PDMA_COMP_CNTRL Register Contents

Bit Position	Bit Name	Function
31 to 30	PROT[1:0]	Protection Enable 10: Writing is enabled. Other than the above: Writing is disabled.
29 to 0	DMACMPERR [29:0]	A DMA comparison error can be generated by writing 111111_11111111_00000111_00001111 to DMACMPERR together with the PROT bit.

31.3.3 Usage Notes

Reading a register with a value that is undefined after a reset without initializing the register may lead to a CPU comparison error. Accordingly, we recommend initializing such registers with the desired settings.

CAUTION

Be sure to use the startup routine to initialize these registers before referring to them since they are implicitly used by the C compiler.

31.4 Memory Protection

31.4.1 Overview

This product incorporates the memory protection function to prevent erroneous accesses to data in memories and control registers of the peripheral circuits.

- MPU
  The CPU1 protects memories against illegal accesses from the CPU1 itself. Accesses to addresses that are prohibited by the MPU are never issued by the CPU1. For details, see the *RH850 Family User's Manual, Software*.
- Slave Guard
  A specific memory is protected against illegal accesses from any bus master. Slave guard includes the following guard types. The details of each type are given in the following sections.
  - PEG
    The local RAM is protected against illegal accesses. However, accesses from the CPU incorporating the local RAM itself are excluded. For example, accesses from the CPU1 to the local RAM in the CPU1 are not rejected by the PEG.
    For details, see **Section 3, CPU System**.
  - IPG
    The CPU Peripheral is protected against illegal accesses.
    For details, see **Section 3, CPU System**.
  - PBG
    The control registers in the peripheral circuits and memories are protected against illegal accesses. For details, see **Section 31.4.2, PBG**.

31.4.1.1 Identifiers for Slave Guard

For the slave guard function, the type of illegal accesses to be rejected can be designated using the following identifiers.

Identifier	Function
UM	When the CPU makes an access, the operating mode of the CPU is indicated. 0: Supervisor mode 1: User mode When the DMAC or DTS makes an access, the value of this identifier is the value in the channel master setting register. When the H-Bus master makes an access, the value of this identifier is always 1. When the other master makes an access, the value of this identifier is always 0.
SPID	When the CPU makes an access, the system protection identifier SPID that is assigned to the CPU is indicated. When the DMAC or DTS makes an access, the value of this identifier is the value in the channel master setting register. When the H-Bus master makes an access, the value of this identifier is always 11_B. When the other master makes an access, the value of this identifier is always 00_B.
PEID	The access source bus master is indicated. 000_B: Reserved 001_B: CPU1 010_B: Reserved 011_B: Reserved 100_B: Other bus master (H-Bus bus master) 101_B: Reserved 110_B: Reserved 111_B: Reserved When the DMAC or DTS makes an access, the value of this identifier is the value in the channel master setting register.

31.4.2 PBG

The PBG module is divided into several PBG groups, each of which is provided with a maximum of 16 protection channels. A single PBG channel can designate the access against which a single peripheral circuit should be protected. Each PBG group can hold the information of the access that has been rejected.

If an error is detected in the PBG module, the following operations are performed.

- For protection against a read access, an undefined value is read.
- For protection against a write access, the write access is ignored.
- Protection against either access is notified to the error source number 26, “P-Bus guard error” of the ECM.

The following table lists the peripheral circuits to be protected, the corresponding PBG group names, and the PBG channel numbers.

Table 31.65 Peripheral Modules to be Protected and the Corresponding PBG Channel Numbers (1/4)

Peripheral IP Group	PBG Group	PBG Channel Number	Module to be protected	Register to be Protected
Peripheral IP Group 0	PBG0A	0	INTC2	The entire module
		1	DMA_DTS	The entire module
Peripheral IP Group 1	PBG1A	0	TAPA0	The entire module
		1	TAPA1	The entire module
		2	TAPA2	The entire module
		3	TAPA3	The entire module
		4	PIC2	The entire module
		5	TPBA0	The entire module
		6	TPBA1	The entire module
		7	TSG30	The entire module
		8	TSG31	The entire module
		9	TAUJ0	The entire module
		10	TAUJ1	The entire module
		11	TAUJ2	The entire module
		12	TAUD0	The entire module
		13	TAUD1	The entire module
		14	TAUD2	The entire module

Table 31.65 Peripheral Modules to be Protected and the Corresponding PBG Channel Numbers (2/4)

Peripheral IP Group	PBG Group	PBG Channel Number	Module to be protected	Register to be Protected
Peripheral IP Group 1	PBG1B	0	OSTM0	The entire module
		1	OSTM1	The entire module
		2	OSTM0_CLKSEL	IC0CKSEL0
		3	OSTM1_CLKSEL	IC0CKSEL1
		4	ENCA0	The entire module
		5	ENCA1	The entire module
		6	SENT0	The entire module
		7	SENT1	The entire module
		8	SENT2*4	The entire module
		9	SENT3	The entire module
		10	SENT4	The entire module
		11	SENT5	The entire module
		12	PSI50	The entire module
		13	PSI51	The entire module
		14	PIC1	The entire module
Peripheral IP Group 2	PBG2A	0	CSIG0 (group A)*1	CSIG0CTL0-2 CSIG0STR0 CSIG0STCR0
		1	CSIG0 (group B)*1	Other than above
		2	OSTM3	The entire module
		3	OSTM4	The entire module
		4	OSTM5	The entire module
		5	OSTM6	The entire module
		6	OSTM7	The entire module
		7	BIST	LBISTREF1 LBISTREF2 MBISTREF LBISTSIG1 LBISTSIG2 MBISTSIG BSEQ0ST BSEQ0STB
		8	CSIH0 (group A)*2	CSIH0CTL0-2 CSIH0STR0 CSIH0STCR0
		9	CSIH0 (group B)*2	Other than above
		10	CSIH1 (group A)*2	CSIH1CTL0-2 CSIH1STR0 CSIH1STCR0
		11	CSIH1 (group B)*2	Other than above
		12	CSIH2 (group A)*2	CSIH2CTL0-2 CSIH2STR0 CSIH2STCR0
		13	CSIH2 (group B)*2	Other than above
		14	CSIH3 (group A)*2	CSIH3CTL0-2 CSIH3STR0 CSIH3STCR0
		15	CSIH3 (group B)*2	Other than above

Table 31.65 Peripheral Modules to be Protected and the Corresponding PBG Channel Numbers (3/4)

Peripheral IP Group	PBG Group	PBG Channel Number	Module to be protected	Register to be Protected
Peripheral IP Group 3	PBG3A	0	DNFA	The entire module
		1	JTAG port (group A)	Other than JPCR0_0-5
		2	JTAG port (group B)	JPCR0_0-5
		3	Port group 0 to 5 (group A)	Other than PCRi_n
		4	Port group 0 to 5 extended register (group B)	PCRi_n
		5	FCLA0	The entire module
		6	FCLA1	The entire module
		7	FCLA2	The entire module
		8	FCLA3	The entire module
		9	FCLA4	The entire module
		10	ADCD0	The entire module
		11	ADCD1	The entire module
Peripheral IP Group 5	PBG5A	0	Reset	RESF RESFC SWRESA
			BSEQ0CTL	BSEQ0CTL
			Clock output function	CKSC0CTL CSC0STAT CKSC1CTL CSC1STAT ADCKSC0CTL ADCSC0STAT CLKD0DIV CLKD0STAT CLKD1DIV CLKD1STAT
			CVM	CVMF CVMDE CVMDMASK CVMDIAG CVMMON CVMFC CVMDEW CVMREN PROTCMDCVM PROTSCVM
			LVI	LVICNT
			POF	POF POFC
			CLMA0 to 3	CLMAnCTL0 CLMAnCMPL CLMAnCMPH CLMAnPCMD CLMAnPS CLMATEST CLMATESTS

Table 31.65 Peripheral Modules to be Protected and the Corresponding PBG Channel Numbers (4/4)

Peripheral IP Group	PBG Group	PBG Channel Number	Module to be protected	Register to be Protected
Peripheral IP Group 5	PBG5A	0	Digital noise elimination sampling clock	DNFCKS100C DNFCSC100STAT DNFCKS101C DNFCSC101STAT DNFCKS106C DNFCSC106STAT DNFCKS107C DNFCSC107STAT DNFCKS108C DNFCSC108STAT DNFCKS109C DNFCSC109STAT DNFCKS110C DNFCSC110STAT DNFCKS112C DNFCSC112STAT DNFCKS113C DNFCSC113STAT DNFCKS114C DNFCSC114STAT DNFCKS104C DNFCSC104STAT DNFCKS105C DNFCSC105STAT DNFCKS102C DNFCSC102STAT
			Write and erase protection for flash memory	FHVE3 FHVE15
			Write protection	PROT1PHCMD PROT1PS

Note 1. The CSIGx registers are divided into the following two groups and controlled separately.
Group A: CSIGnCTL0 to CSIGnCTL2, CSIGnSTR0, and CSIGnSTCR0
Group B: Other than above.

Note 2. The CSIHx registers are divided into the following two groups and controlled separately.
Group A: CSIHnCTL0 to CSIHnCTL2, CSIHnSTR0, and CSIHnSTCR0
Group B: Other than above.

Note 3. The port group registers are divided into the following two groups and controlled separately.
Group A: Registers other than group B registers
Group B: PCRi_n
Here, i represents the port group number (i = 1 to 17), and n represents the port numbers (n = 0 to 15) in each port group.
The JATG port registers are divided into the following two groups and controlled separately.
Group A: Registers other than group B registers
Group B: JPCR0_0-5

Note 4. Setting this bit is prohibited in 100-pin products.

31.4.2.1 List of Registers

The following table lists the register provided for each PBG channel.

Register Symbol	Register Name	R/W	Value after Reset	Address	Access Size
FSGDxxDPROTn	PBGxx protection register n	R/W	07FF $FFFF_H$	<base_addr0> + 4*n	8/16/32

The following table lists the registers provided for each PBG group.

Register Symbol	Register Name	R/W	Value after Reset	Address	Access Size
ERRSLVxxCTL	PBGxx error control register	W	0000 0000_H	<base_addr1> + 0_H	8/16/32
ERRSLVxxSTAT	PBGxx error status register	R	0000 0000_H	<base_addr1> + 4_H	8/16/32
ERRSLVxxADDR	PBGxx error address register	R	0000 0000_H	<base_addr1> + 8_H	32
ERRSLVxxTYPE	PBGxx error type register	R	0000 0000_H	<base_addr1> + C_H	16/32

In the above tables, “xx” and “n” in the register names and symbols represents the PBG group numbers and PBG channel numbers, respectively. The table below shows the base address values <base_addr0> and <base_addr1>, which correspond to each of the PBG group numbers and PBG channel numbers.

PBG Group	PBG Group Number xx	PBG Channel Number n	<base_addr0>	<base_addr1>
PBG0A	0A	0, 1	FFC4 $C000_H$	FFC4 $C800_H$
PBG1A	1A	0 to 14	FFDD $D000_H$	FFDD $D040_H$
PBG1B	1B	0 to 14	FFDD $D080_H$	FFDD $D0C0_H$
PBG2A	2A	0 to 15	FFF9 4000_H	FFF9 4040_H
PBG3A	3A	0 to 11	FFC4 0000_H	FFC4 0040_H
PBG5A	5A	0	FFF9 0000_H	FFF9 0040_H

31.4.2.2 Details of Registers

(1) FSGDxxDPROTn — PBGxx Protection Register n

FSGDxxDPROTn designates the access to be rejected against which the peripheral circuit control registers and RAM should be protected. Any access that is disabled using any of the identifiers is rejected as an illegal access.

This register is reset by any reset source.

(a) FSGD0ADPROTn

Bit	31	30	29	28	27	26	25	24	23	22	21	20	19	18	17	16
	—	—	—	—	—	—	PROTUM	PROTPEID[7:0]								—
Value after reset	0	0	0	0	0	1	1	1	1	1	1	1	1	1	1	1
R/W	R	R	R	R	R	R	R/W	R/W	R/W	R/W	R/W	R/W	R/W	R/W	R/W	R

Bit	15	14	13	12	11	10	9	8	7	6	5	4	3	2	1	0
	—	—	—	—	—	—	—	PROTSPID[3:0]				PROTDEB	PROTRDPDEF	PROTWRPDEF	PROTRD	PROTWR
Value after reset	1	1	1	1	1	1	1	1	1	1	1	1	1	1	1	1
R/W	R	R	R	R	R	R	R	R/W	R/W	R/W	R/W	R/W	R/W	R/W	R/W	R/W

(b) FSGDxxDPROTn (xx = except 0A)

Bit	31	30	29	28	27	26	25	24	23	22	21	20	19	18	17	16
	PROTLOCK	—	—	—	—	—	PROTUM	PROTPEID[7:0]								—
Value after reset	0	0	0	0	0	1	1	1	1	1	1	1	1	1	1	1
R/W	R/W	R	R	R	R	R	R/W	R/W	R/W	R/W	R/W	R/W	R/W	R/W	R/W	R

Bit	15	14	13	12	11	10	9	8	7	6	5	4	3	2	1	0
	—	—	—	—	—	—	—	PROTSPID[3:0]				PROTDEB	PROTRDPDEF	PROTWRPDEF	PROTRD	PROTWR
Value after reset	1	1	1	1	1	1	1	1	1	1	1	1	1	1	1	1
R/W	R	R	R	R	R	R	R	R/W	R/W	R/W	R/W	R/W	R/W	R/W	R/W	R/W

Table 31.66 FSGDxxDPROTn Register Contents (1/2)

Bit Position	Bit Name	Function
31	PROTLOCK	Register lock 0: FSGDxxDPROTn register is rewritable. 1: FSGDxxDPROTn register is not rewritable. If PROTLOCK=1 is set, it can be hold until reset occurs.
30 to 26	Reserved	When read, the value after reset is returned. When writing, write the value after reset.
25	PROTUM	User Mode Access 0: Enables access in supervisor mode. 1: Enables access in user mode and supervisor mode.
24 to 17	PROTPEID[7:0]	PEID Access The PROTnPEID field is a bit list, in which one bit corresponds to one PEID value. Setting multiple bits enables the multiple ID values simultaneously. For example, setting the PROTPEID field to 0101B enables access with PEID = 0 and PEID = 2. 0: Disables access with PEIDn. 1: Enables access with PEIDn.

Table 31.66 FSGDxxDPROTn Register Contents (2/2)

Bit Position	Bit Name	Function
16 to 9	Reserved	When read, the value after reset is returned. When writing, write the value after reset.
8 to 5	PROTSPID[3:0]	SPID Access The PROTnSPID field is a bit list, in which one bit corresponds to one SPID value. Setting multiple bits enables the multiple SPID values simultaneously. For example, setting the PROTnSPID field to 0101B enables access with SPID = 0 and SPID = 2. 0: Disables access with SPIDn. 1: Enables access with SPIDn.
4	PROTDEB	Debug Access 0: Disables access from the debug master. 1: Enables access from the debug master.
3	PROTRDPDEF	Default Read Protection 0: Enables read access from any master. 1: Enables read access from the master having passed the filter by the PROTRD bit.
2	PROTWRPDEF	Default Write Protection 0: Enables write access from any master. 1: Enables read access from the master having passed the filter by the PROTWR bit.
1	PROTRD	Read Permission 0: Disables read access from the master having passed the filter. 1: Enables read access from the master having passed the filter.
0	PROTWR	Write Permission 0: Disables write access from the master having passed the filter. 1: Enables write access from the master having passed the filter.

(2) ERRSLVxxCTL — PBGxx Error Control Register

ERRSLVxxCTL clears the status in the error status register.

This register is reset by any reset source.

Bit	31	30	29	28	27	26	25	24	23	22	21	20	19	18	17	16
	—	—	—	—	—	—	—	—	—	—	—	—	—	—	—	—
Value after reset	0	0	0	0	0	0	0	0	0	0	0	0	0	0	0	0
R/W	R	R	R	R	R	R	R	R	R	R	R	R	R	R	R	R

Bit	15	14	13	12	11	10	9	8	7	6	5	4	3	2	1	0
	—	—	—	—	—	—	—	—	—	—	—	—	—	—	CLRO	CLRE
Value after reset	0	0	0	0	0	0	0	0	0	0	0	0	0	0	0	0
R/W	R	R	R	R	R	R	R	R	R	R	R	R	R	R	W	W

Table 31.67 ERRSLVxxCTL Register Contents

Bit Position	Bit Name	Function
31 to 2	Reserved	When read, the value after reset is returned. When writing, write the value after reset.
1	CLRO	Writing 1 to this bit clears the OVF flag in ERRSLVxxSTAT. Always read as 0 when read.
0	CLRE	Writing 1 to this bit clears the ERR flag in ERRSLVxxSTAT. Always read as 0 when read.

(3) ERRSLVxxSTAT — PBGxx Error Status Register

ERRSLVxxSTAT holds the status of the illegal access rejected with the PBGxx.

This register is reset by any reset source.

Bit	31	30	29	28	27	26	25	24	23	22	21	20	19	18	17	16
	—	—	—	—	—	—	—	—	—	—	—	—	—	—	—	—
Value after reset	0	0	0	0	0	0	0	0	0	0	0	0	0	0	0	0
R/W	R	R	R	R	R	R	R	R	R	R	R	R	R	R	R	R

Bit	15	14	13	12	11	10	9	8	7	6	5	4	3	2	1	0
	—	—	—	—	—	—	—	—	—	—	—	—	—	—	OVF	ERR
Value after reset	0	0	0	0	0	0	0	0	0	0	0	0	0	0	0	0
R/W	R	R	R	R	R	R	R	R	R	R	R	R	R	R	R	R

Table 31.68 ERRSLVxxSTAT Register Contents

Bit Position	Bit Name	Function
31 to 2	Reserved	When read, the value after reset is returned.
1	OVF	0: When ERR = 1, PBG protection violation has not been detected. 1: When ERR = 1, PBG protection violation has been detected.
0	ERR	0: PBG protection violation has not been detected. 1: PBG protection violation has been detected.

(4) ERRSLVxxADDR — PBGxx Error Address Register

ERRSLVxxADDR holds the address of the illegal access rejected with the PBGxx.

This register is reset by any reset source.

Bit	31	30	29	28	27	26	25	24	23	22	21	20	19	18	17	16
	ADDR[31:16]															
Value after reset	0	0	0	0	0	0	0	0	0	0	0	0	0	0	0	0
R/W	R	R	R	R	R	R	R	R	R	R	R	R	R	R	R	R

Bit	15	14	13	12	11	10	9	8	7	6	5	4	3	2	1	0
	ADDR[15:0]															
Value after reset	0	0	0	0	0	0	0	0	0	0	0	0	0	0	0	0
R/W	R	R	R	R	R	R	R	R	R	R	R	R	R	R	R	R

Table 31.69 ERRSLVxxADDR Register Contents

Bit Position	Bit Name	Function
31 to 0	ADDR[31:0]	Access Address when PBG Protection Violation is Detected ADDR[1:0] are always fixed to 0.

(5) ERRSLVxxTYPE — PBGxx Error Type Register

ERRSLVxxTYPE holds the type of the illegal access rejected with the PBGxx.

This register is reset by any reset source.

Bit	31	30	29	28	27	26	25	24	23	22	21	20	19	18	17	16
	—	—	—	—	—	—	—	—	—	—	—	—	—	—	—	—
Value after reset	0	0	0	0	0	0	0	0	0	0	0	0	0	0	0	0
R/W	R	R	R	R	R	R	R	R	R	R	R	R	R	R	R	R

Bit	15	14	13	12	11	10	9	8	7	6	5	4	3	2	1	0
	PEID[2:0]			—	—	—	SPID[1:0]		—	UM	—	STRB[3:0]				WRITE
Value after reset	0	0	0	0	0	0	0	0	0	0	0	0	0	0	0	0
R/W	R	R	R	R	R	R	R	R	R	R	R	R	R	R	R	R

Table 31.70 ERRSLVxxTYPE Register Contents

Bit Position	Bit Name	Function
31 to 16	Reserved	When read, the value after reset is returned.
15 to 13	PEID[2:0]	PEID of the access source from which the PBG protection violation is generated.
12 to 10	Reserved	When read, the value after reset is returned.
9, 8	SPID[1:0]	SPID of the access source from which the PBG protection violation is generated.
7	Reserved	When read, the value after reset is returned.
6	UM	UM of the access source from which the PBG protection violation is generated.
5	Reserved	When read, the value after reset is returned.
4 to 1	STRB[3:0]	Information indicating the width of access from which the PBG protection violation is generated. 32-bit access: 1111_B 16-bit access: 0011_B 8-bit access: 0001_B
0	WRITE	This bit is set to 1 when an access that has generated PBG protection violation is the write.

31.5 Clock Monitors

31.5.1 Overview

This product incorporates the clock monitors to monitor the clock operation by detecting the abnormal frequency of the clock to be monitored. The clock monitors provide the following functions.

- Monitors to see if the frequency of the clock to be monitored is within the specified range based on the sampling clock.
- Issues an error notice to the ECM upon detection of the abnormal state of the clock.

Table 31.71 shows the clocks monitored by the clock monitors and the sampling clocks used.

Table 31.71 List of Clocks Monitored by Each Clock Monitor and Sampling Clocks Used

Clock Monitor Channel	Monitored Clock	Sampling Clock
CLMA0	MainOSC	HS IntOSC/4
CLMA1	Peripheral Clock (40MHz) / 2	MainOSC/8
CLMA2	WDTCLKI = 8 MHz WDTCLKI = 250 KHz	Main OSC/16 Main OSC/512
CLMA3	Clock CPU (160 MHz)	MainOSC/2

NOTE

There are two clocks monitored by CLMA2 and sampling clocks, each of which is selected by the setting of OPWDMDS and OPCM2MDS.

- OPWDMDS
  0: WDTCLKI = HSIntOSC (8 MHz)
  1: WDTCLKI = HSIntOSC/32 (250 KHz)
- OPCM2MDS
  0: Main OSC/16
  1: Main OSC/512

31.5.2 List of Registers

31.5.2.1 Clock Monitor Channel Registers

Table 31.72 List of Registers

Address	Symbol	Register Name	R/W	Value after Reset	Access Size
<Base_adr + 00_H>	CLMAnCTL0	CLMAn control register 0	R/W	00_H	8
<Base_adr + 08_H>	CLMAnCMPL	CLMAn compare register L	R/W	0001_H	16
<Base_adr + $0C_H$>	CLMAnCMPH	CLMAn compare register H	R/W	$03FF_H$	16

The base addresses of the registers are shown below.

Clock Monitor Channel	<Base_addr>
CLMA0	FFF8 8400_H
CLMA1	FFF8 8420_H
CLMA2	FFF8 8440_H
CLMA3	FFF8 8460_H

31.5.2.2 Shared Registers

Register Symbol	Register Name	R/W	Value after Reset	Address	Access Size
CLMATEST	CLMA self-test register	R/W	0000 0000_H	FFF8 8204_H	32
CLMATESTS	CLMA self-test status register	R	0000 0000_H	FFF8 8208_H	32

31.5.3 Details of Registers

31.5.3.1 CLMAnCTL0 — CLMAn Control Register 0

CLMAnCTL0 controls the operation of the clock monitors. CLMAnCTL0 is protected by the CLMAnPCMD register.

Writing to this register is protected by a special sequence of instructions by using the protection command register CLMAnPCMD.

For details, see **Section 4.3, Write-Protected Registers**.

This register is reset by any reset source.

Bit	7	6	5	4	3	2	1	0
	—	—	—	—	—	—	—	CLMAnCLME
Value after reset	0	0	0	0	0	0	0	0
R/W	R	R	R	R	R	R	R	R/W*0

Note 0. After CLMAnCLME has been set to 1, writing 0 is ignored. It can only be cleared by a reset.

Table 31.73 CLMAnCTL0 Register Contents

Bit Position	Bit Name	Function
7 to 1	Reserved	When read, the value after reset is returned. When writing, write the value after reset.
0	CLMAnCLME	Clock Monitor Operation 0: Disables operation. 1: Enables operation.

31.5.3.2 CLMAnCMPL —CLMAn Compare Register L

CLMAnCMPL sets the lower limit of the normal frequency range used for comparison.

This register is reset by any reset source.

Bit	15	14	13	12	11	10	9	8	7	6	5	4	3	2	1	0
	—	—	—	—	CLMAn CMPL11	CLMAn CMPL10	CLMAn CMPL9	CLMAn CMPL8	CLMAn CMPL7	CLMAn CMPL6	CLMAn CMPL5	CLMAn CMPL4	CLMAn CMPL3	CLMAn CMPL2	CLMAn CMPL1	CLMAn CMPL0
Value after reset	0	0	0	0	0	0	0	0	0	0	0	0	0	0	0	1
R/W	R	R	R	R	R/W	R/W	R/W	R/W	R/W	R/W	R/W	R/W	R/W	R/W	R/W	R/W

Table 31.74 CLMAnCMPL Register Contents

Bit Position	Bit Name	Function
15 to 12	Reserved	When read, the value after reset is returned. When writing, write the value after reset.
11 to 0	CLMAnCMPL [11:0]	Lower Limit of Normal Frequency Range CLMAnCMPL can be written to when CLMAnCTL0.CLMAnCLME is 0. Once CLMAnCTL0.CLMAnCLME is set to 1, writing to CLMAnCMPL is invalid.

31.5.3.3 CLMAnCMPH — CLMAn Compare Register H

CLMAnCMPH sets the upper limit of the normal frequency range used for comparison.

This register is reset by any reset source.

Bit	15	14	13	12	11	10	9	8	7	6	5	4	3	2	1	0
	—	—	—	—	CLMAn CMPH11	CLMAn CMPH10	CLMAn CMPH9	CLMAn CMPH8	CLMAn CMPH7	CLMAn CMPH6	CLMAn CMPH5	CLMAn CMPH4	CLMAn CMPH3	CLMAn CMPH2	CLMAn CMPH1	CLMAn CMPH0
Value after reset	0	0	0	0	0	0	1	1	1	1	1	1	1	1	1	1
R/W	R	R	R	R	R/W	R/W	R/W	R/W	R/W	R/W	R/W	R/W	R/W	R/W	R/W	R/W

Table 31.75 CLMAnCMPH Register Contents

Bit Position	Bit Name	Function
15 to 12	Reserved	When read, the value after reset is returned. When writing, write the value after reset.
11 to 0	CLMAnCMPH [11:0]	Upper Limit of Normal Frequency Range CLMAnCMPH can be written to when CLMAnCTL0.CLMAnCLME is 0. Once CLMAnCTL0.CLMAnCLME is set to 1, writing to CLMAnCMPH is invalid.

31.5.3.4 CLMATEST — CLMA Self-test Register

CLMATEST is used for self-testing of CLMA3 to CLMA0.

Writing to this register is protected by a special sequence of instructions by using the protection command register PROT1PHCMD.

For details, see **Section 4.3, Write-Protected Registers**.

This register is reset by any reset source.

Bit	31	30	29	28	27	26	25	24	23	22	21	20	19	18	17	16
	—	—	—	—	—	—	—	—	—	—	—	—	—	—	—	—
Value after reset	0	0	0	0	0	0	0	0	0	0	0	0	0	0	0	0
R/W	R	R	R	R	R	R	R	R	R	R	R	R	R	R	R	R

Bit	15	14	13	12	11	10	9	8	7	6	5	4	3	2	1	0
	—	—	—	—	—	—	—	—	—	CLMA3TESTEN	CLMA2TESTEN	CLMA1TESTEN	CLMA0TESTEN	ERRMSK	MONCLKMSK	RESCLM
Value after reset	0	0	0	0	0	0	0	0	0	0	0	0	0	0	0	0
R/W	R	R	R	R	R	R	R	R	R	R/W	R/W	R/W	R/W	R/W	R/W	R/W

Table 31.76 CLMATEST Register Contents

Bit Position	Bit Name	Function
31 to 7	Reserved	When read, the value after reset is returned. When writing, write the value after reset.
6 to 3	CLMA3TESTEN CLMA2TESTEN CLMA1TESTEN CLMA0TESTEN	Enable or disable self-testing of CLMA3 to CLMA0. 0: Disables self-testing of the corresponding CLMAn. 1: Enables self-testing of the corresponding CLMAn.
2	ERRMSK	Masks an error notification to the ECM when CLMAn detects an error. When the ERRMSK is set for a certain CLMAn, the associated CLMAn does not issue an error notification to the ECM even if it detects an error. ERRMSK setting is valid only for the CLMAn for which CLMAnTESTEN (n = 0 to 2) is set to 1. 0: Does not mask an error notification to the ECM. 1: Masks an error notification to the ECM.
1	MONCLKMSK	Fixes the level of the clock input to the CLMAn that should be monitored, to the low level. MONCLKMSK setting is valid only for the CLMAn for which CLMAnTESTEN (n = 0 to 2) is set to 1. 0: Does not fix the clock input to the CLMAn that should be monitored to the low level. 1: Fixes the clock input to the CLMAn that should be monitored to the low level.
0	RESCLM	Initializes CLMAn forcibly. RESCLM setting is valid only for the CLMAn for which CLMAnTESTEN (n = 0 to 2) is set to 1. 0: Does not initialize CLMAn. 1: Initializes CLMAn.

31.5.3.5 CLMATESTS — CLMA Self-test Status Register

CLMATESTS indicates the self-testing result of CLMA3 to CLMA0.

This register is reset by any reset source.

Bit	31	30	29	28	27	26	25	24	23	22	21	20	19	18	17	16
	—	—	—	—	—	—	—	—	—	—	—	—	—	—	—	—
Value after reset	0	0	0	0	0	0	0	0	0	0	0	0	0	0	0	0
R/W	R	R	R	R	R	R	R	R	R	R	R	R	R	R	R	R

Bit	15	14	13	12	11	10	9	8	7	6	5	4	3	2	1	0
	—	—	—	—	—	—	—	—	—	—	—	—	CLMA3 ERRS	CLMA2 ERRS	CLMA1 ERRS	CLMA0 ERRS
Value after reset	0	0	0	0	0	0	0	0	0	0	0	0	0	0	0	0
R/W	R	R	R	R	R	R	R	R	R	R	R	R	R	R	R	R

Table 31.77 CLMATESTS Register Contents

Bit Position	Bit Name	Function
31 to 4	Reserved	When read, the value after reset is returned.
3 to 0	CLMA3ERRS CLMA2ERRS CLMA1ERRS CLAM0ERRS	Indicate whether or not CLMA3 to CLMA0 have detected an error. This bit is not affected by CLMATEST.ERRMSK. 0: The corresponding CLMAn has not yet detected an error. 1: The corresponding CLMAn has detected an error.

31.5.4 Detection of Abnormal Clock Frequency

1. CLMAn counts the number of rising edges of the monitored clock signal within 16 sampling clock cycles, and compares the count with the specified thresholds.
   - The lower threshold is specified using the CLMAnCMPL[11:0] bits in CLMAnCMPL register.
   - The upper threshold is specified using the CLMAnCMPH[11:0] bits in CLMAnCMPH register.
2. When the monitored clock frequency is so low*1 that the count falls below the value set in CLMAnCMPL[11:0] in the CLMAnCMPL register, CLMAn notifies the ECM of the abnormal clock. CLMAn also notifies the ECM of the abnormal clock when the clock frequency is so high that the count exceeds the value set in CLMAnCMPH[11:0] in the CLMAnCMPH register.

Note 1. There is a case that the abnormal state is not detected when the monitor clock completely stops.

Note that even if the frequency of the monitored clock fluctuates during the sampling period, an error is not notified as long as the number of detected edges falls within the specified range.

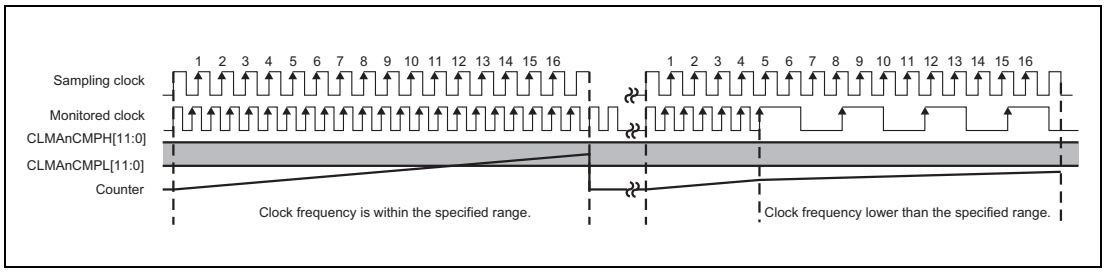

Figure 31.1 Operation when Monitored Clock Frequency is Lower than Lower Threshold

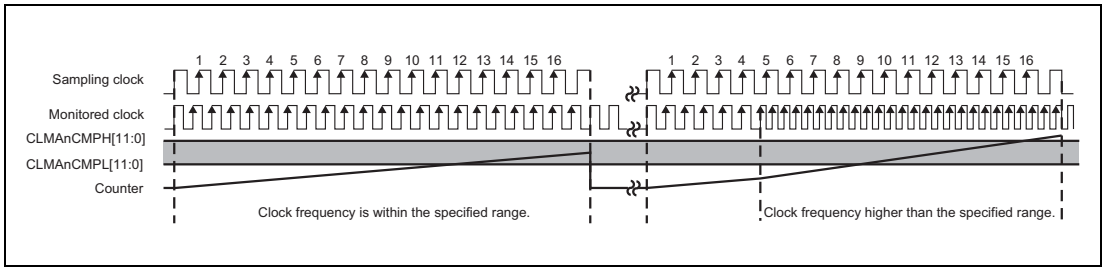

Figure 31.2 Operation when Monitored Clock Frequency is Higher than Higher Threshold

(a) Calculation method of the thresholds CLMAnCMPL.CLMAnCMPL[11:0] and CLMAnCMPH.CLMAnCMPH[11:0]

The compare registers CLMAnCMPL and CLMAnCMPH are configured with the minimum and maximum value of clock cycles of CLMAnTMON that are assumed to be valid within 16 cycles of the sampling clock CLMAnTSMP.

The expected number of clock cycles is denoted by N.

$$\frac{16}{f_{CLMAnTSMP}} = \frac{N}{f_{CLMAnTMON}}$$

$$N = \frac{f_{CLMAnTMON}}{f_{CLMAnTSMP}} \times 16$$

Considering the allowed frequency deviations of CLMAnTMON and CLMAnTSMP, the threshold values can be calculated by the following formulas:

$$\text{Lower threshold} = N_{min} = \frac{f_{CLMAnTMON(min)}}{f_{CLMAnTSMP(max)}} \times 16 - 1$$

$$\text{Upper threshold} = N_{max} = \frac{f_{CLMAnTMON(max)}}{f_{CLMAnTSMP(min)}} \times 16 + 1$$

Note 1. CLMAnTSMP: Sampling clock
CLMAnTMON: Monitor clock
$f_{CLMAnTSMP}$: Sampling clock frequency
$f_{CLMAnTMON}$: Monitor clock frequency

Note 2. See **Table 31.78** for settings of the register CLMAnCMPH and CLMAnCMPL of this product.

(b) Minimum thresholds

The following restrictions must be taken into account:

- CLMAnCMPL ≥ 0001_H (n = 0 to 3)
- CLMAnCMPH ≥ CLMAnCMPL + 0003_H (n = 0 to 3)

Table 31.78 Setting Example of CLMAnCMPH and CLMAnCMPL Registers

Clock Monitor Channel	Monitored Clock		Sampling Clock		CLMAnCMPL	CLMAnCMPH
		Frequency		Frequency		
CLMA0	MainOSC	16 MHz	HS IntOSC/4	2 MHz	0073_H	0090_H
CLMA1	CLK_LSB/2	20 MHz	MainOSC/8	2 MHz	$009D_H$	$00A3_H$
CLMA2	WDTCLKI = HS IntOSC (8 MHz)	8 MHz	MainOSC/16	1 MHz	0071_H	$008F_H$
	WDTCLKI = HS IntOSC/32 (250 KHz)	250 KHz	MainOSC/512	31.25 kHz	0071_H	$008F_H$
CLMA3	Clock CPU (160 MHz)	160 MHz	MainOSC/2	8 MHz	0139_H	0147_H

31.5.5 Self-Diagnosis

Self-diagnosis of the clock monitor is available as described below.

(1) Configure thresholds (CLMAnCMPL/CLMAnCMPH) of target CLMA. Set thresholds into values to generate an error.

(2) Specify the clock monitor to be self-diagnosed.
Setting the CLMATEST.CLMAnTESEN bit to 1 enables specifying the corresponding clock monitor to be self-diagnosed.

(3) To prevent error notice to the ECM based on self-diagnosis, set CLMATEST.ERRMSKL simultaneously with step (2).

(4) To enable the monitor operation, Set CLMAnCTL0.CLMAnCLME bit to 1.

(5) Wait for the time long enough to allow error occurrence, read the CLMATESTS register to see if an error has been generated in the clock monitor to be self-diagnosed. The time from the start of self-diagnosis to the error occurrence depends on the sampling period. A maximum of two sampling cycles are required.

(6) Clear the error generated by self-diagnosis.
Setting CLMATEST.RESCLM to 1 enables initializing the clock monitor to be self-diagnosed.

(7) Terminate self-diagnosis.
Setting all the bits in CLMATEST to 0 enables terminating self-diagnosis.

Before restarting the clock monitor that has been self-diagnosed, set the registers again as required.

31.5.6 Notes on Register Setting

31.5.6.1 Setting CLMAnCMPL/CLMAnCMPH Registers

The CLMAnCMPL/CLMAnCMPH registers should be set so that the following conditions are satisfied. If the clock monitor is otherwise used, operation cannot be guaranteed.

- $1 \leq$ CLMAnCMPL
- CLMAnCMPL + 3 $\leq$ CLMAnCMPH (n = 0, 1, or 2)

31.6 BIST

This product incorporates the function to detect failures of the failure detection function itself, which is referred to as BIST. For BIST execution results, see **Section 31.6.3, Confirming Completion of BIST with no Abnormalities Detected**.

CAUTION

The following registers are excluded from the target of the field BIST.

- **ECMMESSTR0, ECMMESSTR1, ECMCESSTR0, ECMCESSTR1, ECMMESET, ECMCESET, BRAMDAT0, BRAMDAT1, BRAMDAT2, BRAMDAT3, LBISTREF1, LBISTREF2, MBISTREF, LBISTSIG1, LBISTSIG2, MBISTSIG, BSEQ0ST, BSEQ0STB, RESF, RESFC, BSEQ0CTL, CLKD0DIV, CLKD0STAT, CLKD1DIV, CLKD1STAT, MODER, CVMF, CVMDE, CVMMON, CVMREN, POF**

31.6.1 List of BIST Registers

The table below lists the BIST-related registers.

Table 31.79 List of BIST Registers

Register Name	Symbol	Address
Field BIST control register	BSEQ0CTL	FFF8 A440$_H$
Logic BIST signature register 1	LBISTREF1	FFD6 9000$_H$
Logic BIST signature register 2	LBISTREF2	FFD6 9004$_H$
Memory BIST signature register	MBISTREF	FFD6 9008$_H$
Logic BIST signature result register 1	LBISTSIG1	FFD6 900C$_H$
Logic BIST signature result register 2	LBISTSIG2	FFD6 9010$_H$
Memory BIST signature result register	MBISTSIG	FFD6 9014$_H$
BIST error status register	BSEQ0ST	FFD6 9020$_H$
BIST error status inversion register	BSEQ0STB	FFD6 9024$_H$

Note 1. For how to confirm normal completion of field BIST, see **Section 31.6.3**, Confirming Completion of BIST with no Abnormalities Detected.

31.6.2 Details of Registers

31.6.2.1 BSEQ0CTL — Field BIST Control Register

This register controls execution of field BIST after reset release.

Writing to this register is protected by a special sequence of instructions by using the protection command register PROT1PHCMD.

For details, see **Section 4.3, Write-Protected Registers**.

This register is only initialized by POCRES, CVMRES, or DBRES.

Access: BSEQ0CTL can be read/written in 32-bit units.

Address: FFF8 A440$_H$

Value after reset: 0000 0001$_H$

Bit	31	30	29	28	27	26	25	24	23	22	21	20	19	18	17	16
	—	—	—	—	—	—	—	—	—	—	—	—	—	—	—	—
Value after reset	0	0	0	0	0	0	0	0	0	0	0	0	0	0	0	0
R/W	R	R	R	R	R	R	R	R	R	R	R	R	R	R	R	R

Bit	15	14	13	12	11	10	9	8	7	6	5	4	3	2	1	0
	—	—	—	—	—	—	—	—	—	—	—	—	—	—	—	HWBIS TEXE
Value after reset	0	0	0	0	0	0	0	0	0	0	0	0	0	0	0	1
R/W	R	R	R	R	R	R	R	R	R	R	R	R	R	R	R	R/W

Table 31.80 BSEQ0CTR Register Contents

Bit Position	Bit Name	Function
31 to 1	Reserved	When read, the value after reset is returned. When writing, write the value after reset.
0	HWBISTEXE	0: Field BIST is not executed after reset release. 1: Field BIST is executed after reset release.

Note 1. Field BIST is executed since HWBISTEXE = 1 after POCRES, CVMRES, or DBRES.
Execution of field BIST can be enabled or disabled by setting HWBISTEXE at a pin reset (EXTRES) or ECM reset (ECMRES). FieldBIST is not executed regardless of the HWBISTEXE value at SWRES.

31.6.2.2 LBISTREF1 — Logic BIST signature register 1

The LBISTREF1 register holds the expected value when logic BIST1 is executed.

This register is initialized by POCRES, DBRES, EXTRES, CVMRES, or ECMRES.

Access: LBISTREF1 can be read/written in 32-bit units.

Address: FFD6 9000_H

Value after reset: 000A $5A5A_H$

Bit	31	30	29	28	27	26	25	24	23	22	21	20	19	18	17	16
	—	—	—	—	—	—	—	—	—	—	—	—	LBISTREF1[19:16]			
Value after reset	0	0	0	0	0	0	0	0	0	0	0	0	1	0	1	0
R/W	R	R	R	R	R	R	R	R	R	R	R	R	R/W	R/W	R/W	R/W

Bit	15	14	13	12	11	10	9	8	7	6	5	4	3	2	1	0
	LBISTREF1[15:0]															
Value after reset	0	1	0	1	1	0	1	0	0	1	0	1	1	0	1	0
R/W	R/W	R/W	R/W	R/W	R/W	R/W	R/W	R/W	R/W	R/W	R/W	R/W	R/W	R/W	R/W	R/W

Table 31.81 LBISTREF1 Register Contents

Bit Position	Bit Name	Function
31 to 20	Reserved	When read, the value after reset is returned. When writing, write the value after reset.
19 to 0	LBISTREF1 [19:0]	These bits hold the signature value of logic BIST1.

31.6.2.3 LBISTREF2 — Logic BIST Signature Register 2

The LBISTREF2 register holds the expected value when logic BIST2 is executed.

This register is initialized by POCRES, DBRES, EXTRES, CVMRES, or ECMRES.

Access: LBISTREF2 can be read/written in 32-bit units.

Address: FFD6 9004_H

Value after reset: 0005 $A5A5_H$

Bit	31	30	29	28	27	26	25	24	23	22	21	20	19	18	17	16
	—	—	—	—	—	—	—	—	—	—	—	—	LBISTREF2[19:16]			
Value after reset	0	0	0	0	0	0	0	0	0	0	0	0	0	1	0	1
R/W	R	R	R	R	R	R	R	R	R	R	R	R	R/W	R/W	R/W	R/W

Bit	15	14	13	12	11	10	9	8	7	6	5	4	3	2	1	0
	LBISTREF2[15:0]															
Value after reset	1	0	1	0	0	1	0	1	1	0	1	0	0	1	0	1
R/W	R/W	R/W	R/W	R/W	R/W	R/W	R/W	R/W	R/W	R/W	R/W	R/W	R/W	R/W	R/W	R/W

Table 31.82 LBISTREF2 Register Contents

Bit Position	Bit Name	Function
31 to 20	Reserved	When read, the value after reset is returned. When writing, write the value after reset.
19 to 0	LBISTREF2 [19:0]	These bits hold the signature value of logic BIST2.

31.6.2.4 MBISTREF — Memory BIST Signature Register

The MBISTREF register holds the expected value when memory BIST is executed.

This register is initialized by POCRES, DBRES, EXTRES, CVMRES, or ECMRES.

Access: MBISTREF can be read/written in 32-bit units.

Address: FFD6 9008_H

Value after reset: 000A $A55A_H$

Bit	31	30	29	28	27	26	25	24	23	22	21	20	19	18	17	16
	—	—	—	—	—	—	—	—	—	—	—	—	MBISTREF[19:16]			
Value after reset	0	0	0	0	0	0	0	0	0	0	0	0	1	0	1	0
R/W	R	R	R	R	R	R	R	R	R	R	R	R	R/W	R/W	R/W	R/W

Bit	15	14	13	12	11	10	9	8	7	6	5	4	3	2	1	0
	MBISTREF[15:0]															
Value after reset	1	0	1	0	0	1	0	1	0	1	0	1	1	0	1	0
R/W	R/W	R/W	R/W	R/W	R/W	R/W	R/W	R/W	R/W	R/W	R/W	R/W	R/W	R/W	R/W	R/W

Table 31.83 LBISTREF2 Register Contents

Bit Position	Bit Name	Function
31 to 20	Reserved	When read, the value after reset is returned. When writing, write the value after reset.
19 to 0	MBISTREF [19:0]	These bits hold the signature value of memory BIST.

31.6.2.5 LBISTSIG1 — Logic BIST Signature Result Register 1

The LBISTSIG1 register holds the result value of logic BIST1 execution.

This register is initialized by POCRES, DBRES, EXTRES, CVMRES, or ECMRES.

Access: LBISTSIG1 can be read/written in 32-bit units.

Address: FFD6 900C$_H$

Value after reset: 0005 A5A5$_H$

Bit	31	30	29	28	27	26	25	24	23	22	21	20	19	18	17	16
	—	—	—	—	—	—	—	—	—	—	—	—	LBISTSIG1[19:16]			
Value after reset	0	0	0	0	0	0	0	0	0	0	0	0	0	1	0	1
R/W	R	R	R	R	R	R	R	R	R	R	R	R	R/W	R/W	R/W	R/W

Bit	15	14	13	12	11	10	9	8	7	6	5	4	3	2	1	0
	LBISTSIG1[15:0]															
Value after reset	1	0	1	0	0	1	0	1	1	0	1	0	0	1	0	1
R/W	R/W	R/W	R/W	R/W	R/W	R/W	R/W	R/W	R/W	R/W	R/W	R/W	R/W	R/W	R/W	R/W

Table 31.84 LBISTSIG1 Register Contents

Bit Position	Bit Name	Function
31 to 20	Reserved	When read, the value after reset is returned. When writing, write the value after reset.
19 to 0	LBISTSIG1 [19:0]	These bits hold the result value of logic BIST1 execution.

31.6.2.6 LBISTSIG2 — Logic BIST Signature Result Register 2

The LBISTSIG2 register holds the result value of logic BIST2 execution.

This register is initialized by POCRES, DBRES, EXTRES, CVMRES, or ECMRES.

Access: LBISTSIG2 can be read/written in 32-bit units.

Address: FFD6 9010_H

Value after reset: 000A $5A5A_H$

Bit	31	30	29	28	27	26	25	24	23	22	21	20	19	18	17	16
	—	—	—	—	—	—	—	—	—	—	—	—	LBISTSIG2[19:16]			
Value after reset	0	0	0	0	0	0	0	0	0	0	0	0	1	0	1	0
R/W	R	R	R	R	R	R	R	R	R	R	R	R	R/W	R/W	R/W	R/W

Bit	15	14	13	12	11	10	9	8	7	6	5	4	3	2	1	0
	LBISTSIG2[15:0]															
Value after reset	0	1	0	1	1	0	1	0	0	1	0	1	1	0	1	0
R/W	R/W	R/W	R/W	R/W	R/W	R/W	R/W	R/W	R/W	R/W	R/W	R/W	R/W	R/W	R/W	R/W

Table 31.85 LBISTSIG1 Register Contents

Bit Position	Bit Name	Function
31 to 20	Reserved	When read, the value after reset is returned. When writing, write the value after reset.
19 to 0	LBISTSIG2 [19:0]	These bits hold the result value of logic BIST2 execution.

31.6.2.7 MBISTSIG — Memory BIST Signature Result Register

The MBISTSIG register holds the result value of memory BIST execution.

This register is initialized by POCRES, DBRES, EXTRES, CVMRES, or ECMRES.

Access: MBISTSIG can be read/written in 32-bit units.

Address: FFD6 9014_H

Value after reset: 0005 $5AA5_H$

Bit	31	30	29	28	27	26	25	24	23	22	21	20	19	18	17	16
	—	—	—	—	—	—	—	—	—	—	—	—	MBISTSIG[19:16]			
Value after reset	0	0	0	0	0	0	0	0	0	0	0	0	0	1	0	1
R/W	R	R	R	R	R	R	R	R	R	R	R	R	R/W	R/W	R/W	R/W

Bit	15	14	13	12	11	10	9	8	7	6	5	4	3	2	1	0
	MBISTSIG[15:0]															
Value after reset	0	1	0	1	1	0	1	0	1	0	1	0	0	1	0	1
R/W	R/W	R/W	R/W	R/W	R/W	R/W	R/W	R/W	R/W	R/W	R/W	R/W	R/W	R/W	R/W	R/W

Table 31.86 MBISTSIG Register Contents

Bit Position	Bit Name	Function
31 to 20	Reserved	When read, the value after reset is returned. When writing, write the value after reset.
19 to 0	MBISTSIG [19:0]	These bits hold the result value of memory BIST execution.

31.6.2.8 BSEQ0ST — BIST Error Status Register

The BSEQ0ST register holds the error status of field BIST.

This register is initialized by POCRES, DBRES, EXTRES, CVMRES, or ECMRES.

Access: BSEQ0ST can be read in 32-bit units.

Address: FFD6 9020_H

Value after reset: 0000 0001_H

Bit	31	30	29	28	27	26	25	24	23	22	21	20	19	18	17	16
	—	—	—	—	—	—	—	—	—	—	—	—	—	—	—	—
Value after reset	0	0	0	0	0	0	0	0	0	0	0	0	0	0	0	0
R/W	R	R	R	R	R	R	R	R	R	R	R	R	R	R	R	R

Bit	15	14	13	12	11	10	9	8	7	6	5	4	3	2	1	0
	—	—	—	—	—	—	—	—	—	—	—	—	DEBUG MODE	BIST_RESULT[2:0]		
Value after reset	0	0	0	0	0	0	0	0	0	0	0	0	0	0	0	1
R/W	R	R	R	R	R	R	R	R	R	R	R	R	R	R	R	R

Table 31.87 BSEQ0ST Register Contents

Bit Position	Bit Name	Function
31 to 4	Reserved	When read, the value after reset is returned.
3	DEBUGMODE	0: Indicates that the chip is not in debug mode. 1: Indicates that the chip is in debug mode.
2 to 0	BIST_RESULT [2:0]	010: The self-diagnostic BIST is normally ended. Other than above: The self-diagnostic BIST is abnormally ended, not completed, nor not started.

31.6.2.9 BSEQ0STB — BIST Error Status Inversion Register

This register holds the inverse of the bits of the BSEQ0ST register.

This register is initialized by POCRES, DBRES, EXTRES, CVMRES, or ECMRES.

Access: This register can be read in 32-bit units.

Address: FFD6 9024_H

Value after reset: 0000 $000E_H$

Bit	31	30	29	28	27	26	25	24	23	22	21	20	19	18	17	16
	—	—	—	—	—	—	—	—	—	—	—	—	—	—	—	—
Value after reset	0	0	0	0	0	0	0	0	0	0	0	0	0	0	0	0
R/W	R	R	R	R	R	R	R	R	R	R	R	R	R	R	R	R

Bit	15	14	13	12	11	10	9	8	7	6	5	4	3	2	1	0
	—	—	—	—	—	—	—	—	—	—	—	—	DEBUG MODEB	BIST_RESULTB[2:0]		
Value after reset	0	0	0	0	0	0	0	0	0	0	0	0	1	1	1	0
R/W	R	R	R	R	R	R	R	R	R	R	R	R	R	R	R	R

Table 31.88 BSEQ0STB Register Contents

Bit Position	Bit Name	Function
31 to 4	Reserved	When read, the value after reset is returned.
3	DEBUGMODEB	Indicates the inverse of the DEBUGMODE bit in the BSEQ0ST register.
2 to 0	BIST_RESULTB [2:0]	Indicates the inverse of the BIST_RESULT[2:0] bits in the BSEQ0ST register.

31.6.3 Confirming Completion of BIST with no Abnormalities Detected

The registers listed below can be used to confirm the result of field BIST.

- Confirming matching of field BIST signatures
  The expected value stored in logic BIST signature register 1 or 2 or in the memory BIST signature register matching the value of the result stored in the logic BIST signature result register 1 or 2 or in the memory BIST signature result register indicates that no abnormalities were detected by field BIST.

  LBISTREF1 = LBISTSIG1
  LBISTREF2 = LBISTSIG2
  MBISTREF = MBISTSIG

- Confirming the error status
  Use the BIST error status register to confirm that the BIST sequence has been completed without detecting abnormalities. The BSEQ0STB register value indicates the inverse of the BSEQ0ST register value.

  BSEQ0ST = $0000\ 0002_H$

- Debug mode:
  In debug mode ($\overline{DCUTRST}$ = H), expected values are not stored in the LBISTREF1, LBISTREF2 and MBISTREF registers, and results are not stored in the LBISTSIG1, LBISTSIG2, and MBISTSIG registers. Design the program to judge the result of field BIST from the value of DEBUGMODE.

31.6.4 State Transition of Field BIST

The following chart shows the state transition of the field BIST.

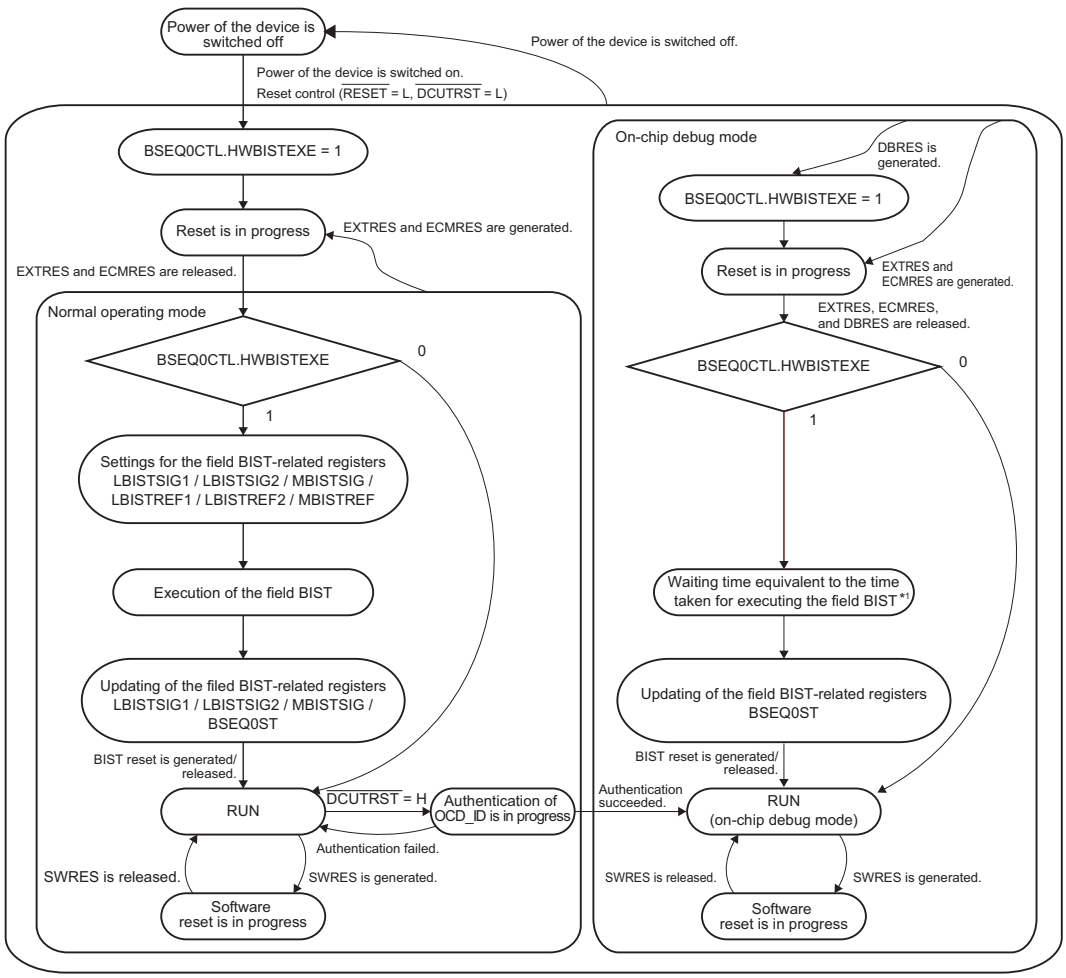

Note 1. A waiting time equivalent to the time taken for executing the field BIST is inserted.

Figure 31.3 State Transition of Field BIST

31.6.5 Note

In this device, when executing the field BIST, test code is read at the beginning of the program. If a 1-bit ECC error is detected during reading of the test code, the field BIST is executed with the corrected test code. If a 2-bit ECC error is detected during reading of the test code, the field BIST is not executed and a waiting time equivalent to the time taken for executing the field BIST is inserted. Detection of both 1-bit and 2-bit ECC errors are notified to the ECM. For details, see Table 32.5, ERROROUT Output Operation.

31.7 ECM

The ECM monitors various failure detection states in the LSI chip, and defines the operation to be carried out upon failure detection. For the details of the ECM, see Section 32, Error Control Module (ECM).

Section 32 Error Control Module (ECM)

32.1 Overview

32.1.1 Specification Overview

The error control module (ECM) collects error signals coming from different error sources and monitoring circuits. It also outputs error signals from the $\overline{\text{ERROROUT}}$ pins and generates interrupts and internal reset (ECMRES) signals. **Table 32.1** shows the specification overview of the ECM.

Table 32.1 Specification Overview

Item	Description
Safety processing	The ECM can handle the following processing in response to error signal inputs from individual modules. • Error flag set • EI level interrupt generation EI level interrupt generation can be controlled (enabled/disabled) for individual errors. • FE level interrupt generation FE level interrupt generation can be controlled (enabled/disabled) for individual errors. • Internal reset (ECMRES) generation Internal reset (ECMRES) generation can be controlled (enabled/disabled) for individual errors. • ERROROUT output Pin output mask can be controlled (enabled/disabled) for individual errors. Output can be toggled in response to a timer input or made at a fixed level.
Error status	The ECM incorporates the ECM master/checker error source status register, which can be used to confirm the error status from the error flag. The error flags are only cleared by the ECM error source status clear trigger register, POCRES, CVMRES, or DBRES. In case of other reset sources, the error flags are kept and the reset generation source can be confirmed by reading the ECM master/checker error source status register after reset.
Debug, self-diagnosis	• Pseudo errors can be generated for debug and self-diagnosis. The operation during injection of pseudo errors is identical to that for the occurrence of real errors. All configurations for masking of the ERROROUT output, interrupts, and internal resets (ECMRES) apply in the same way. • The ECM incorporates a loop-back function of the ERROROUT output that is used to diagnose the path to the $\overline{\text{ERROROUT}}$ pin. The status of the $\overline{\text{ERROROUT}}$ pin is reflected to an internal register and can be confirmed by reading the register.
Timeout function	The ECM incorporates a function that generates an ERROROUT output or internal reset (ECMRES) when the count value of the delay timer matches with the delay timer compare register because the delay timer was not stopped during the interrupt processing after being started simultaneously with the occurrence of an interrupt request.
Register protection	A write-protection with a special sequence is incorporated to protect registers from inadvertent write access.
Others	The ECM is duplexed. The ECM incorporates the $\overline{\text{ERROROUT}}$ pin. The ERROROUT outputs from the ECM master and ECM checker are constantly compared. If they do not match, an ECM compare error (error source 29) occurs.

32.1.2 Reset Sources

ECM reset source is listed in the following table. ECM is initialized by this reset source.

Table 32.2 Reset Source

Unit Name	Reset Source
ECM	Reset controller SYSRES

NOTE

The ECMmESSTR0 register (m = M/C) and the ECMmESSTR1 register (m = M/C) are initialized by POCRES, CVMRES, or DBRES.

32.1.3 Error Sources

Table 32.3 lists the error sources of the ECM of RH850/P1x.

Table 32.3 List of Error Sources (1/2)

No	Error Source	Unit	Initial Settings					
			EI Level Interrupt		FE Level Interrupt		Internal Reset (ECMRES)	Error Mask
				Delay Timer Start		Delay Timer Start		
0	WDTA error	WDTA	OFF	OFF	OFF	OFF	ON	OFF
1	Lock step compare error	Lock step	OFF	OFF	OFF	OFF	ON	OFF
2	Reserved		—	—	—	—	—	—
3	Reserved		—	—	—	—	—	—
4	Clock monitor upper-limit error (MainOSC)	CLMA0	OFF	OFF	OFF	OFF	OFF	OFF
5	Clock monitor lower-limit error (MainOSC)		OFF	OFF	OFF	OFF	OFF	OFF
6	Clock monitor upper-limit error (WDTA count clock)	CLMA2	OFF	OFF	OFF	OFF	OFF	OFF
7	Clock monitor lower-limit error (WDTA count clock)		OFF	OFF	OFF	OFF	OFF	OFF
8	Clock monitor upper-limit error (peripheral clock)	CLMA1	OFF	OFF	OFF	OFF	OFF	OFF
9	Clock monitor lower-limit error (peripheral clock)		OFF	OFF	OFF	OFF	OFF	OFF
10	Clock monitor upper-limit error (PE1 checker core clock)	CLMA3	OFF	OFF	OFF	OFF	OFF	OFF
11	Clock monitor lower-limit error (PE1 checker core clock)		OFF	OFF	OFF	OFF	OFF	OFF
12	Local RAM 2-bit ECC error	Local RAM	OFF	OFF	OFF	OFF	OFF	OFF
13	Reserved		—	—	—	—	—	—
14	Instruction cache RAM 2-bit ECC error and SED error	Instruction cache RAM	OFF	OFF	OFF	OFF	OFF	OFF
15	Code flash 2-bit ECC error and address parity error	Code flash	OFF	OFF	OFF	OFF	OFF	OFF
16	Data flash 2-bit ECC error	Data flash	OFF	OFF	OFF	OFF	OFF	OFF
17	DTS RAM 2-bit ECC error	DTS RAM	OFF	OFF	OFF	OFF	OFF	OFF
18	CSIH RAM 2-bit ECC error	CSIH RAM	OFF	OFF	OFF	OFF	OFF	OFF
19	CAN RAM 2-bit ECC error	CAN RAM	OFF	OFF	OFF	OFF	OFF	OFF
20	FlexRay RAM 2-bit ECC error	FlexRay RAM	OFF	OFF	OFF	OFF	OFF	OFF
21	Mode error (flash programming mode is started in single-chip mode)	Operating mode	OFF	OFF	OFF	OFF	OFF	OFF
22	Mode error (test mode is started in single-chip mode)	Operating mode	OFF	OFF	OFF	OFF	OFF	OFF
23	Mode error (single-chip mode is inactive in single-chip mode)	Operating mode	OFF	OFF	OFF	OFF	OFF	OFF
24	PE guard error	PE guard	OFF	OFF	OFF	OFF	OFF	OFF
25	Reserved		—	—	—	—	—	—

Table 32.3 List of Error Sources (2/2)

No	Error Source	Unit	Initial Settings					
			EI Level Interrupt		FE Level Interrupt		Internal Reset (ECMRES)	Error Mask
				Delay Timer Start		Delay Timer Start		
26	P-Bus guard error	P-Bus guard	OFF	OFF	OFF	OFF	OFF	OFF
27	SAR-ADC parity error	ADC0, ADC1	OFF	OFF	OFF	OFF	OFF	OFF
28	Bus data parity error	Bus data parity	OFF	OFF	OFF	OFF	OFF	OFF
29	ECM compare error	ECM	OFF	OFF	OFF	OFF	OFF	OFF
30	LVI error	LVI	OFF	OFF	OFF	OFF	OFF	OFF
31	Temperature sensor error	Temperature sensor	OFF	OFF	OFF	OFF	OFF	OFF
32	DMA transfer error	DMA	OFF	OFF	OFF	OFF	OFF	OFF
33	DMA register access protection violation error	DMA	OFF	OFF	OFF	OFF	OFF	OFF
34	Local RAM 1-bit ECC error	Local RAM	OFF	OFF	OFF	OFF	OFF	OFF
35	Reserved		—	—	—	—	—	—
36	Code flash 1-bit ECC error	Code flash	OFF	OFF	OFF	OFF	OFF	OFF
37	Data flash 1-bit ECC error	Data flash	OFF	OFF	OFF	OFF	OFF	OFF
38	DTS RAM 1-bit ECC error	DTS	OFF	OFF	OFF	OFF	OFF	OFF
39	All peripheral functions RAM 1-bit ECC error	CSIH/CAN/FlexRay/ RAM	OFF	OFF	OFF	OFF	OFF	OFF
40	BIST code 1-bit ECC error	BIST	OFF	OFF	OFF	OFF	OFF	OFF
41	BIST code 2-bit ECC error	BIST	OFF	OFF	OFF	OFF	OFF	OFF
42	FACI reset transfer error	FACI	OFF	OFF	OFF	OFF	OFF	OFF

NOTE

OFF: This indicates that when an error occurs, an EI level interrupt, FE level interrupt, internal reset (ECMRES), or delay timer start is not generated, and the error mask is disabled.

ON: This indicates that when an error occurs, an EI level interrupt, FE level interrupt, internal reset (ECMRES), or delay timer start is generated, and the error mask is enabled.

Table 32.4 shows the error sources of the ECM of RH850/P1x.

Table 32.4 Summary of Error Sources (1/2)

No	Unit	Error Source	Remarks
0	WDTA	WDTA error	Occurs when WDTA detects an error. For details, see **Section 21.5.3, WDTA Error Detection**.
1	Lock step	Lock step compare error	Occurs at the following times: • When outputs of the master core and checker core do not match. • When there is a mismatch with the redundant DMA output.
4 to 11	CLMA0 to CLMA3	Clock monitor upper-/lower-limit error	Occurs when the clock monitor detects abnormal frequency of the targeted clock. For details, see **Section 31.5, Clock Monitors**.
12	Local RAM	Local RAM ECC 2-bit error	Occurs when local RAM ECC detects an ECC 2-bit error. For details, see **Section 31.2.4, Local RAM (CPU1) ECC**.
14	Instruction cache RAM	Instruction cache RAM ECC 2-bit error and SED error	Occurs when the instruction cache ECC detects an ECC 2-bit or ECC 1-bit error. For details, see **Section 31.2.5, Instruction Cache ECC and EDC**.
15	Code flash	Code flash ECC 2-bit error and address parity error	Occurs when code flash ECC detects an ECC 2-bit or address parity error. For details, see **Section 31.2.2, Code Flash ECC and Address Parity**.
16	Data flash	Data flash ECC 2-bit error	Occurs when data flash ECC detects an ECC 2-bit error. For details, see **Section 31.2.3, Data Flash ECC**.
17	DTS RAM	DTS RAM ECC 2-bit error	Occurs when transfer information is read from DTSRAM and if an ECC 2-bit error is detected. For details, see **Section 7.4.3, DTSRAM Error**.
18	CSIH RAM	CSIH RAM ECC 2-bit error	Occurs when data is read from CSIH RAM and if an ECC 2-bit error is detected.
19	CAN RAM	CAN RAM ECC 2-bit error	Occurs when data is read from CAN RAM and if an ECC 2-bit error is detected.
20	FlexRay RAM	FlexRay RAM ECC 2-bit error	Occurs when data is read from FlexRay RAM and if an ECC 2-bit error is detected.
21	Operating mode	Mode error (serial programming mode is started in single-chip mode)	Occurs at an unintentional transition to serial programming mode while single chip mode is set (FLMD0 = 0).
22	Operating mode	Mode error (test mode is started in single-chip mode)	Occurs at an unintentional transition to production test mode while single chip mode is set (FLMD0 = 0).
23	Operating mode	Mode error (single-chip mode is inactive in single-chip mode)	Occurs at an unintentional disabling of single chip mode while single chip mode is set (FLMD0 = 0).
24	PE guard	PE guard error	Occurs when PE guard function (PEG) detects a PE guard violation. For details, see **Section 3.2.3.1, PE Guard Function (PEG)**.
26	P-Bus guard	P-Bus guard error	Occurs when PBG module detects an error. For details, see **Section 31.4.2, PBG**.
27	ADC0, ADC1	SAR-ADC parity error	Occurs when ADCA detects a parity error. For details, see Section **Section 30.4.5.2, A/D Error Interrupt Request and A/D Parity Error Interrupt Request**.
28	Bus data parity	Bus data parity error	Occurs when a parity error is detected in the transfer path for data parity. For details, see **Section 31.2.8, Data Parity for Data Transfer Paths**.
29	ECM	ECM compare error	Occurs when outputs of the ECM master and ECM checker mismatched.
30	LVI	LVI error	Occurs when LVI detects an error. For details, see **Section 10.2, Low-Voltage Detection Circuit (LVI)**.
31	Temperature sensor	Temperature sensor error	Occurs when the temperature sensor detects an abnormal temperature error. For details, see **Section 11, Temperature Sensor**.

Table 32.4 Summary of Error Sources (2/2)

No	Unit	Error Source	Remarks
32	DMA	DMA transfer error	Occurs when a DMA transfer error is detected. For details, see **Section 7.4.2, DMA Transfer Error**).
33	DMA	DMA register access protection violation error	Occurs when register access protection function in DMA detects an illegal access. For details, see **Section 7.5, Reliability Function**).
34	Local RAM	Local RAM ECC 1-bit error	Occurs when local RAM ECC detects an ECC 1-bit error. For details, see **Section 31.2.4, Local RAM (CPU1) ECC**.
36	Code flash	Code flash ECC 1-bit error	Occurs when code flash ECC detects an ECC 1-bit error. For details, see **Section 31.2.2, Code Flash ECC and Address Parity**.
37	Data flash	Data flash ECC 1-bit error	Occurs when data flash ECC detects an ECC 1-bit error. For details, see **Section 31.2.3, Data Flash ECC**.
38	DTS	DTS RAM ECC 1-bit error	Occurs when transfer information is read from DTSRAM and if an ECC 1-bit error is detected. For details, see **Section 7.4.3, DTSRAM Error**.
39	CSIH/CAN/ FlexRay/ RAM	All peripheral functions RAM ECC 1-bit error	Occurs when data of either CSIH RAM, CAN RAM or FlexRay is read from DTSRAM and if an ECC 1-bit error is detected.
40	BIST	BIST code ECC 1-bit error	Occurs when BIST is executed and if an ECC 1-bit error is detected during reading of the test code. An error flag is stored in the ECM master/checker error source status register 1 after BIST execution.
41	BIST	BIST code ECC 2-bit error	Occurs when BIST is executed and if an ECC 2-bit error is detected during read operation of the test code. An error flag is stored in the ECM master/checker error source status register 1 after BIST execution.
42	FACI	FACI reset transfer error	Occurs when a FACI reset transfer error is detected. For details, see the *User's Manual: Hardware*.

32.1.4 Operations for ERROROUT Output

After release from the reset state, the output on the $\overline{\text{ERROROUT}}$ pin indicates an error. Follow the procedure described in **Section 32.3.3, ECMmECLR — ECM Master/Checker Error Clear Trigger Register (m = M/C)** to clear the error output before using the ECM.

The ERROROUT output signal can be configured for two different modes of operation, non-dynamic or dynamic. Furthermore, when ERROROUT output is selected and the signal is in dynamic mode, output on the pin indicates errors in synchronization with errors as they occur regardless of the pulse cycle.

Table 32.5 ERROROUT Output Operation

Error Status ECMmSSE031 to ECMmSSE000 ECMmSSE115 to ECMmSSE100	Operating Mode ECMSL0 Bit	ERROROUT Output Operating Mode	ERROROUT Output Level	Error Status
0	0	Non-dynamic	H	No error
	1	Dynamic	Toggles (according to timer input)	No error
1	0	Non-dynamic	L	Error
	1	Dynamic	L	Error

32.1.4.1 Dynamic Mode Enable

1. Select the timer output by the ECMEPCTL register (see **Section 32.3.26, ECMEPCTL — ECM Error Pulse Control Register**).
2. Initialize channel 15 in OSTM1/TAUD1.
3. Set the ERROROUT output to normal output by setting the ECMmECT (m = M/C) bit in the ECM master/checker error clear trigger register to 1.
4. Set the ECMSL0 bit in the ECM error pulse configuration register to 1 to specify dynamic mode.
5. Start up channel 15 in OSTM1/TAUD1.

32.1.4.2 Dynamic Mode Disable

1. Set the ERROROUT output to low level by setting the ECMmEST bit (m = M/C) in the ECM master/checker error set trigger register to 1.
2. Stop channel 15 in OSTM1/TAUD1.
3. Clear the ECMSL0 bit in the ECM error pulse configuration register to 0 to specify non-dynamic mode.

32.1.5 Loop-Back Function

ECM incorporates a loop-back function that is used to check the path to the $\overline{\text{ERROROUT}}$ pin. The output level of the $\overline{\text{ERROROUT}}$ pin can be checked with the ECMmSSE131 bit (m = M/C) in the ECM master/checker error source status register 1.

32.1.6 Pseudo Error Generation

The ECM incorporates a function that can generate pseudo errors for test or debug purposes. The operation of the ECM during injection of pseudo errors is identical to that for the occurrence of real errors. All configurations for error masks, interrupt, internal reset (ECMRES), or delay timer apply in the same way.

32.1.7 Error Status

The error status is indicated by the ECM master/checker error source status register 0 and ECM master/checker error source status register 1. The error status is only cleared by the ECM error source status clear trigger register, POCRES, CVMRES, or DBRES. In case of other reset sources, the error status is kept and the error of the reset source can be confirmed by reading the ECM master/checker error source status register 0 and ECM master/checker error source status register 1 after reset release.

32.1.8 Timeout Function for Interrupt Processing

The delay timer incorporated in the ECM can be started simultaneously with the occurrence of an interrupt request. The ECM incorporates a function that generates an ERROROUT output or internal reset (ECMRES) when the counter value of the delay timer matches with the value of the ECM delay timer compare register because the delay timer was not stopped during the interrupt processing. The timer counting is not stopped when a break occurs.

The counting of the delay timer always starts from 0. Configure the duration until an internal reset (ECMRES) or ERROROUT output is generated with the settings of the ECM delay timer compare register.

If another error by which the delay timer is to be started occurs while the delay timer is running, the current value counted by the delay timer is not reset but the timer continues to run.

Do not set the delay timer for clock monitor upper limit/lower limit errors (errors no. 4 to 11).

Examples of how to use the delay timer

1. In ECMMICFG0 and ECMMICFG1, enable whichever of the ECM EI interrupts are to be used as error sources from the delay timer.
2. In ECMIRCFG1, make the setting for a reset by the ECM in response to an overflow of the delay timer.
3. Enable the delay timer (ECMDTMCTL.ECMSTA = 1).
4. In ECMEMK0 and ECMEMK1, mask ERROROUT output for the error sources of the delay timer to be used.
5. The delay timer starts counting at the same time as the generation of an ECM EI interrupt in response to an error from a source that is in use.
6. If handling of the error in the ECM EI interrupt handler returns the timer from the error state, stop counting by the delay timer (ECMDTMCTL.ECMSTP = 1) and re-enable the next round of counting (ECMDTMCTL.ECMSTA = 1).

An ECM reset is generated if the counter overflows before counting by the delay timer is stopped.

32.2 Block Diagram

Figure 32.1 and **Figure 32.2** are block diagrams of the ECM.

The ERROROUT output, internal reset (ECMRES), ERROROUTZ signals are active low signals while the maskable interrupts and FE level interrupts are active high. The ERROROUTZ signal to PIC1 is not toggled, even if the ECM is set for dynamic mode.

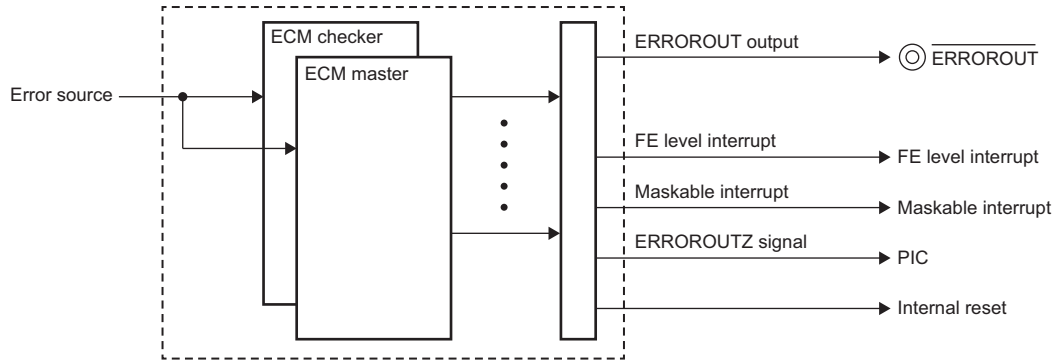

Note: : See **Figure 32.2, Diagram of ECM Connection**.

Figure 32.1 Overview of ECM

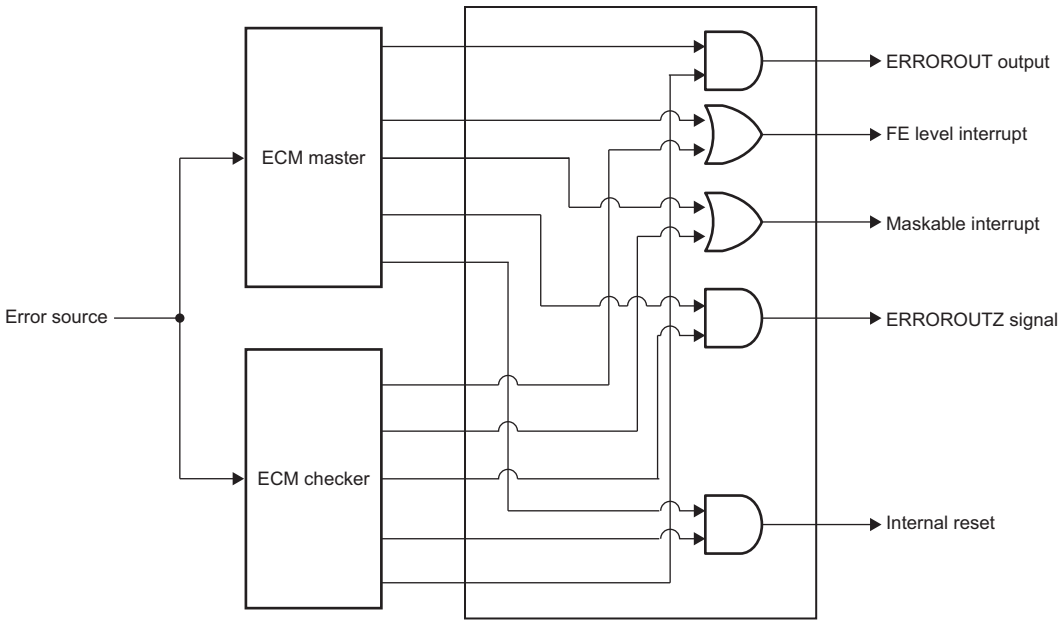

Figure 32.2 Diagram of ECM Connection

32.3 Register Specification

32.3.1 List of Registers

The ECM consists of three address areas: common part, ECM master, and ECM checker.

The following shows the register map of the ECM master registers.

Table 32.6 Address List of ECM Master Registers

<ECMM_base: FFD6 0000_H>

Register Symbol	Register Name	R/W	Value after Reset	Protection by Sequence	Address
ECMMESET	ECM master error set trigger register	W	00_H	Protected	<ECMM_base>
ECMMECLR	ECM master error clear trigger register	W	00_H	Protected	<ECMM_base> + 04_H
ECMMESSTR0	ECM master error source status register 0	R	$0000\ 0000_H$	Not protected	<ECMM_base> + 08_H
ECMMESSTR1	ECM master error source status register 1	R	$0000\ 0000_H$	Not protected	<ECMM_base> + $0C_H$

The following shows the register map of the ECM checker registers.

Table 32.7 Address List of ECM Checker Registers

<ECMC_base: FFD6 1000_H>

Register Symbol	Register Name	R/W	Value after Reset	Protection by Sequence	Address
ECMCESET	ECM checker error set trigger register	W	00_H	Protected	<ECMC_base>
ECMCECLR	ECM checker error clear trigger register	W	00_H	Protected	<ECMC_base> + 04_H
ECMCESSTR0	ECM checker error source status register 0	R	$0000\ 0000_H$	Not protected	<ECMC_base> + 08_H
ECMCESSTR1	ECM checker error source status register 1	R	$0000\ 0000_H$	Not protected	<ECMC_base> + $0C_H$

The following shows the register map of the ECM common part.

Table 32.8 Address List of ECM Registers

<ECM_base: FFD6 2000_H>

Register Symbol	Register Name	R/W	Value after Reset	Protection by Sequence	Address
ECMEPCFG	ECM error pulse configuration register	R/W	00_H	Protected	<ECM_base>
ECMMICFG0	ECM EI level interrupt configuration register 0	R/W	$0000\ 0000_H$	Protected	<ECM_base> + 04_H
ECMMICFG1	ECM EI level interrupt configuration register 1	R/W	$0000\ 0000_H$	Protected	<ECM_base> + 08_H
ECMNMICFG0	ECM FE level interrupt configuration register 0	R/W	$0000\ 0000_H$	Protected	<ECM_base> + $0C_H$
ECMNMICFG1	ECM FE level interrupt configuration register 1	R/W	$0000\ 0000_H$	Protected	<ECM_base> + 10_H
ECMIRCFG0	ECM internal reset configuration register 0	R/W	$0000\ 000F_H$	Protected	<ECM_base> + 14_H
ECMIRCFG1	ECM internal reset configuration register 1	R/W	$0000\ 0000_H$	Protected	<ECM_base> + 18_H
ECMEMK0	ECM error mask register 0	R/W	$0000\ 0000_H$	Protected	<ECM_base> + $1C_H$
ECMEMK1	ECM error mask register 1	R/W	$0000\ 0000_H$	Protected	<ECM_base> + 20_H
ECMESSTC0	ECM error source status clear trigger register 0	W	$0000\ 0000_H$	Protected	<ECM_base> + 24_H
ECMESSTC1	ECM error source status clear trigger register 1	W	$0000\ 0000_H$	Protected	<ECM_base> + 28_H
ECMPE0	ECM pseudo error trigger register 0	W	$0000\ 0000_H$	Protected	<ECM_base> + 34_H
ECMPE1	ECM pseudo error trigger register 1	W	$0000\ 0000_H$	Protected	<ECM_base> + 38_H
ECMDTMCTL	ECM delay timer control register	W	00_H	Protected	<ECM_base> + $3C_H$
ECMDTMR	ECM delay timer register	R	0000_H	Not protected	<ECM_base> + 40_H
ECMDTMCMP	ECM delay timer compare register	R/W	0000_H	Protected	<ECM_base> + 44_H
ECMDTMCFG0	ECM delay timer configuration register 0	R/W	$0000\ 0000_H$	Protected	<ECM_base> + 48_H
ECMDTMCFG1	ECM delay timer configuration register 1	R/W	$0000\ 0000_H$	Protected	<ECM_base> + $4C_H$
ECMDTMCFG2	ECM delay timer configuration register 2	R/W	$0000\ 0000_H$	Protected	<ECM_base> + 50_H
ECMDTMCFG3	ECM delay timer configuration register 3	R/W	$0000\ 0000_H$	Protected	<ECM_base> + 54_H
ECMEPCTL	ECM error pulse control register	R/W	00_H	Not protected	FFD6 3000_H

The ECM registers are assigned to three address areas: the address area for ECM common registers, the address area for ECM master registers, and the address area for ECM checker registers. The address area for ECM common registers is used for both master and checker registers. Writing to this common area is performed by master and checker registers simultaneously. Reading from the common area reads the master register's value. The ECM master and checker registers can be written separately.

32.3.2 ECMmESET — ECM Master/Checker Error Set Trigger Register (m = M/C)

The ECM master/checker error set trigger register is for selecting output of the error signal from the $\overline{\text{ERROROUT}}$ pin. When the ECMmEST bit is set to 1, the $\overline{\text{ERROROUT}}$ pin immediately outputs the error signal. The output cannot be masked.

Writing to this register is protected by a special sequence of instructions by using the protection command register ECMMPCMD0/ECMCPCMD0/ECMPCMD1. For details, see **Section 4.3, Write-Protected Registers**.

This register is always read as 00_H.

Access: This register can be written in 8-bit units.

Address: <ECMM_base>
<ECMC_base>

Value after reset: 00_H

Bit	7	6	5	4	3	2	1	0
	—	—	—	—	—	—	—	ECMmEST
Value after reset	0	0	0	0	0	0	0	0
R/W	R	R	R	R	R	R	R	W

Table 32.9 ECMmESET Register Contents

Bit Position	Bit Name	Function
7 to 1	Reserved	When writing, write the value after reset.
0	ECMmEST	Error Set Trigger 0: Writing 0 is invalid 1: Set the output level from the $\overline{\text{ERROROUT}}$ pin to error output.

CAUTIONS

Setting the ERROROUT output from the ERROROUT pin via the ECMmESET register will set the ECMmSSE029 bit of the ECMmESSTR0 register (ECM compare error). Therefore, the ECMmESET register has to be set following the sequence below.

1. Set the ECMEMK029 bit of the ECMEMK0 register to “masked”.
2. Prevent the generation of interrupts by setting the ECMIE029 bit of the ECMMICFG0 register to “prohibited” and the ECMIE029 bit of the ECMNMICFG0 register to “prohibited”.
3. Prevent generation of an internal reset (ECMRES) by setting the ECMIRE029 bit of the ECMIRCFG0 register to “prohibited”.
4. Set the ERROROUT output with the ECMmESET register.
5. Clear error flags by setting the ECMCLSSE029 bit of the ECMESSTC0 register.
6. Make the following settings in accord with the condition of usage for the ECM compare error.
   - To allow output of the ERROROUT signal from the $\overline{\text{ERROROUT}}$ pin, set the ECMEMK029 bit of the ECMEMK0 register to “not masked”.
   - To enable generation of interrupts, set the ECMIE029 bit of the ECMMICFG0 register to “enabled” or the ECMIE029 bit of the ECMNMICFG0 register to “enabled”.
   - To enable generation of an internal reset (ECMRES), set the ECMIRE029 bit of the ECMIRCFG0 register to “enabled”.

32.3.3 ECMmECLR — ECM Master/Checker Error Clear Trigger Register (m = M/C)

The ECM master/checker error clear trigger register is for setting the error signal from the $\overline{\text{ERROROUT}}$ pin to the inactive level (high level or toggle). When the ECMmECT bit is set to 1, the $\overline{\text{ERROROUT}}$ pin immediately outputs the inactive level (high level or toggle) as long as there are no other sources that set the $\overline{\text{ERROROUT}}$ pin to the low level.

Writing to this register is protected by a special sequence of instructions by using the protection command register ECMMPCMD0/ECMCPCMD0/ECMPCMD1. For details, see **Section 4.3, Write-Protected Registers**.

This register is always read as 00_H.

Access: This register can be written in 8-bit units.

Address: <ECMM_base> + 04_H
<ECMC_base> + 04_H

Value after reset: 00_H

Bit	7	6	5	4	3	2	1	0
	—	—	—	—	—	—	—	ECMmECT
Value after reset	0	0	0	0	0	0	0	0
R/W	R	R	R	R	R	R	R	W

Table 32.10 ECMmECLR Register Contents

Bit Position	Bit Name	Function
7 to 1	Reserved	When writing, write the value after reset.
0	ECMmECT	Error Clear Trigger 0: Writing 0 is invalid 1: Set the output level from the $\overline{\text{ERROROUT}}$ pin to the inactive level (high level or toggle).

CAUTIONS

Clearing of the ERROROUT output is only possible if all errors not masked by ECMEMK0/1, and the ECMmSSE130 bit in the ECMmESSTR1 register are cleared beforehand.

Clearing the ERROROUT output via the ECMmECLR register will set the ECMmSSE029 bit of the ECMmESSTR0 register (ECM compare error). Therefore, the ECMmECLR register has to be set following the sequence below.

1. Set the ECMEMK029 (ECM compare error) bit of the ECMEMK0 register to “masked”.
2. Disable interrupts by setting the ECMIE029 bit of the ECMMICFG0 register to “disabled” and the ECMIE029 bit of the ECMNMICFG0 register to “disabled”.
3. Disable an internal reset (ECMRES) by setting the ECMIRE029 bit of the ECMIRCFG0 register to “disabled”.
4. Clear the ERROROUT output by setting the ECMmECLR register.
5. Clear error flags by setting the ECMCLSSE029 bit of the ECMESSTC0 register.
6. Make the following settings in accord with the condition of usage for the ECM compare error.
   - To allow output of the ERROROUT signal from the $\overline{\text{ERROROUT}}$ pin, set the ECMEMK029 bit of the ECMEMK0 register to “not masked”.
   - To enable generation of interrupts, set the ECMMIE029 bit of the ECMMICFG0 register to “enabled” or the ECMNMIE029 bit of the ECMNMICFG0 register to “enabled”.
   - To enable generation of an internal reset (ECMRES), set the ECMIRE029 bit of the ECMIRCFG0 register to “enabled”.

32.3.4 ECMmESSTR0 — ECM Master/Checker Error Source Status Register 0 (m = M/C)

The ECM master/checker error source status register 0 indicates the state of individual internal error sources, which is irrelevant to the setting of the error mask. This state can only be cleared by the ECM error source status clear trigger register, POCRES, CVMRES, or DBRES. Other reset sources will not affect this register.

Access: This register can be read in 32-bit units.

Address: <ECMM_base> + 08_H
<ECMC_base> + 08_H

Value after reset: $0000\ 0000_H$

Bit	31	30	29	28	27	26	25	24	23	22	21	20	19	18	17	16
	ECMmSSE031	ECMmSSE030	ECMmSSE029	ECMmSSE028	ECMmSSE027	ECMmSSE026	—	ECMmSSE024	ECMmSSE023	ECMmSSE022	ECMmSSE021	ECMmSSE020	ECMmSSE019	ECMmSSE018	ECMmSSE017	ECMmSSE016
Value after reset	0	0	0	0	0	0	0	0	0	0	0	0	0	0	0	0
R/W	R	R	R	R	R	R	R	R	R	R	R	R	R	R	R	R

Bit	15	14	13	12	11	10	9	8	7	6	5	4	3	2	1	0
	ECMmSSE015	ECMmSSE014	—	ECMmSSE012	ECMmSSE011	ECMmSSE010	ECMmSSE009	ECMmSSE008	ECMmSSE007	ECMmSSE006	ECMmSSE005	ECMmSSE004	—	—	ECMmSSE001	ECMmSSE000
Value after reset	0	0	0	0	0	0	0	0	0	0	0	0	0	0	0	0
R/W	R	R	R	R	R	R	R	R	R	R	R	R	R	R	R	R

Table 32.11 ECMmESSTR0 Register Contents

Bit Position	Bit Name	Function
31 to 26	ECMmSSE031 to ECMmSSE026	Error Source Status ECMmSSE031 to ECMmSSE026 correspond to error sources 31 to 26. 0: Error not occurred 1: Error occurred
25	Reserved	When read, the value after reset is read.
24 to 14	ECMmSSE024 to ECMmSSE014	Error Source Status ECMmSSE024 to ECMmSSE014 correspond to error sources 24 to 14. 0: Error not occurred 1: Error occurred
13	Reserved	When read, the value after reset is read.
12 to 4	ECMmSSE012 to ECMmSSE004	Error Source Status ECMmSSE012 to ECMmSSE004 correspond to error sources 12 to 4. 0: Error not occurred 1: Error occurred
3, 2	Reserved	When read, the value after reset is read.
1, 0	ECMmSSE001, ECMmSSE000	Error Source Status ECMmSSE001 and ECMmSSE000 correspond to error sources 1 and 0. 0: Error not occurred 1: Error occurred

32.3.5 ECMmESSTR1 — ECM Master/Checker Error Source Status Register 1 (m = M/C)

The ECM master/checker error source status register 1 indicates the state of individual internal error sources, which is irrelevant to the setting of the error mask. This state can be cleared only by the ECM error source status clear trigger register, POCRES, CVMRES, or DBRES. Other reset sources will not affect this register.

Access: This register can be read in 32-bit units.

Address: <ECMM_base> + $0C_H$
<ECMC_base> + $0C_H$

Value after reset: $0000\ 0000_H$

Bit	31	30	29	28	27	26	25	24	23	22	21	20	19	18	17	16
	ECMmSSE131	ECMmSSE130	ECMmSSE129	—	—	—	—	—	—	—	—	—	—	—	—	—
Value after reset	0	0	0	0	0	0	0	0	0	0	0	0	0	0	0	0
R/W	R	R	R	R	R	R	R	R	R	R	R	R	R	R	R	R

Bit	15	14	13	12	11	10	9	8	7	6	5	4	3	2	1	0
	—	—	—	—	—	ECMmSSE110	ECMmSSE109	ECMmSSE108	ECMmSSE107	ECMmSSE106	ECMmSSE105	ECMmSSE104	—	ECMmSSE102	ECMmSSE101	ECMmSSE100
Value after reset	0	0	0	0	0	0	0	0	0	0	0	0	0	0	0	0
R/W	R	R	R	R	R	R	R	R	R	R	R	R	R	R	R	R

Table 32.12 ECMmESSTR1 Register Contents

Bit Position	Bit Name	Function
31	ECMmSSE131	The status of the ERROROUT pin 0: ERROROUT is low level 1: ERROROUT is high level
30	ECMmSSE130	Indicates the ECMmESET write status. 0: No error 1: Error is set by the ECMmEST bit of the ECMmESET register
29	ECMmSSE129	Indicates whether delay timer overflow has occurred. 0: Delay timer overflow not occurred 1: Delay timer overflow occurred
28 to 11	Reserved	When read, the value after reset is read.
10 to 4	ECMmSSE110 to ECMmSSE104	Error Source Status ECMmSSE110 to ECMmSSE104 correspond to error sources 42 to 36. 0: Error not occurred 1: Error occurred
3	Reserved	When read, the value after reset is read.
2 to 0	ECMmSSE102 to ECMmSSE100	Error Source Status ECMmSSE102 to ECMmSSE100 correspond to error sources 34 to 32. 0: Error not occurred 1: Error occurred

32.3.6 ECMEPCFG — ECM Error Pulse Configuration Register

The ECM error pulse configuration register sets the ERROROUT output operation for the $\overline{\text{ERROROUT}}$ pin. Writing to this register is protected by a sequence of instructions.

Writing to this register is protected by a special sequence of instructions by using the protection command register ECMPCMD1. For details, see **Section 4.3, Write-Protected Registers**.

Access: This register can be read/written in 8-bit units.

Address: <ECM_base>

Value after reset: 00_H

Bit	7	6	5	4	3	2	1	0
	—	—	—	—	—	—	—	ECMSL0
Value after reset	0	0	0	0	0	0	0	0
R/W	R	R	R	R	R	R	R	R/W

Table 32.13 ECMEPCFG Register Contents

Bit Position	Bit Name	Function
7 to 1	Reserved	When read, the value after reset is read. When writing, write the value after reset.
0	ECMSL0	$\overline{\text{ERROROUT}}$ Pin Output Operation Configuration ERROROUT output operation setting for the $\overline{\text{ERROROUT}}$ pin 0: Non-dynamic mode 1: Dynamic mode

32.3.7 ECMMICFG0 — ECM EI Level Interrupt Configuration Register 0

The ECM EI level interrupt configuration register 0 is used to set the generation of the EI level interrupts. The generation of EI level interrupts in response to errors is selectable.

Writing to this register is protected by a special sequence of instructions by using the protection command register ECMPCMD1. For details, see **Section 4.3, Write-Protected Registers**.

Access: This register can be read/written in 32-bit units.

Address: <ECM_base> + 04_H

Value after reset: $0000\ 0000_H$

Bit	31	30	29	28	27	26	25	24	23	22	21	20	19	18	17	16
	ECMMIE031	ECMMIE030	ECMMIE029	ECMMIE028	ECMMIE027	ECMMIE026	—	ECMMIE024	ECMMIE023	ECMMIE022	ECMMIE021	ECMMIE020	ECMMIE019	ECMMIE018	ECMMIE017	ECMMIE016
Value after reset	0	0	0	0	0	0	0	0	0	0	0	0	0	0	0	0
R/W	R/W	R/W	R/W	R/W	R/W	R/W	R	R/W	R/W	R/W	R/W	R/W	R/W	R/W	R/W	R/W

Bit	15	14	13	12	11	10	9	8	7	6	5	4	3	2	1	0
	ECMMIE015	ECMMIE014	—	ECMMIE012	ECMMIE011	ECMMIE010	ECMMIE009	ECMMIE008	ECMMIE007	ECMMIE006	ECMMIE005	ECMMIE004	—	—	ECMMIE001	ECMMIE000
Value after reset	0	0	0	0	0	0	0	0	0	0	0	0	0	0	0	0
R/W	R/W	R/W	R	R/W	R/W	R/W	R/W	R/W	R/W	R/W	R/W	R/W	R	R	R/W	R/W

Table 32.14 ECMMICFG0 Register Contents

Bit Position	Bit Name	Function
32 to 26	ECMMIE031 to ECMMIE026	ECM EI Level Interrupt Generation Control ECMMIE031 to ECMMIE026 correspond to error sources 31 to 26. 0: Interrupt generation disabled 1: Interrupt generation enabled
25	Reserved	When read, the value after reset is read. When writing, write the value after reset.
24 to 14	ECMMIE024 to ECMMIE014	ECM EI Level Interrupt Generation Control ECMMIE024 to ECMMIE014 correspond to error sources 24 to 14. 0: Interrupt generation disabled 1: Interrupt generation enabled
13	Reserved	When read, the value after reset is read. When writing, write the value after reset.
12 to 4	ECMMIE012 to ECMMIE004	ECM EI Level Interrupt Generation Control ECMMIE012 to ECMMIE004 correspond to error sources 12 to 4. 0: Interrupt generation disabled 1: Interrupt generation enabled
3, 2	Reserved	When read, the value after reset is read. When writing, write the value after reset.
1, 0	ECMMIE001, ECMMIE000	ECM EI Level Interrupt Generation Control ECMMIE001 and ECMMIE000 correspond to error sources 1 and 0. 0: Interrupt generation disabled 1: Interrupt generation enabled

32.3.8 ECMMICFG1 — ECM EI Level Interrupt Configuration Register 1

The ECM EI level interrupt configuration register 1 is used to set the generation of EI level interrupts. The generation of EI level interrupts in response to errors is selectable.

Writing to this register is protected by a special sequence of instructions by using the protection command register ECMPCMD1. For details, see **Section 4.3, Write-Protected Registers**.

Access: This register can be read/written in 32-bit units.

Address: <ECM_base> + 08_H

Value after reset: $0000\ 0000_H$

Bit	31	30	29	28	27	26	25	24	23	22	21	20	19	18	17	16
	—	—	—	—	—	—	—	—	—	—	—	—	—	—	—	—
Value after reset	0	0	0	0	0	0	0	0	0	0	0	0	0	0	0	0
R/W	R	R	R	R	R	R	R	R	R	R	R	R	R	R	R	R

Bit	15	14	13	12	11	10	9	8	7	6	5	4	3	2	1	0
	—	—	—	—	—	ECMMIE110	ECMMIE109	ECMMIE108	ECMMIE107	ECMMIE106	ECMMIE105	ECMMIE104	—	ECMMIE102	ECMMIE101	ECMMIE100
Value after reset	0	0	0	0	0	0	0	0	0	0	0	0	0	0	0	0
R/W	R	R	R	R	R	R/W	R/W	R/W	R/W	R/W	R/W	R/W	R	R/W	R/W	R/W

Table 32.15 ECMMICFG1 Register Contents

Bit Position	Bit Name	Function
31 to 11	Reserved	When read, the value after reset is read. When writing, write the value after reset.
10 to 4	ECMMIE110 to ECMMIE104	ECM EI Level Interrupt Generation Control ECMMIE110 to ECMMIE104 correspond to error sources 42 to 36. 0: Interrupt generation disabled 1: Interrupt generation enabled
3	Reserved	When read, the value after reset is read. When writing, write the value after reset.
2 to 0	ECMMIE102 to ECMMIE100	ECM EI Level Interrupt Generation Control ECMMIE102 to ECMMIE100 correspond to error sources 34 to 32. 0: Interrupt generation disabled 1: Interrupt generation enabled

32.3.9 ECMNMICFG0 — ECM FE Level Interrupt Configuration Register 0

The ECM FE level interrupt configuration register 0 is used to set the generation of FE level interrupts. The generation of FE level interrupts in response to errors is selectable.

Writing to this register is protected by a special sequence of instructions by using the protection command register ECMPCMD1. For details, see **Section 4.3, Write-Protected Registers**.

Access: This register can be read/written in 32-bit units.

Address: <ECM_base> + $0C_H$

Value after reset: $0000\ 0000_H$

Bit	31	30	29	28	27	26	25	24	23	22	21	20	19	18	17	16
	ECMNMIE031	ECMNMIE030	ECMNMIE029	ECMNMIE028	ECMNMIE027	ECMNMIE026	—	ECMNMIE024	ECMNMIE023	ECMNMIE022	ECMNMIE021	ECMNMIE020	ECMNMIE019	ECMNMIE018	ECMNMIE017	ECMNMIE016
Value after reset	0	0	0	0	0	0	0	0	0	0	0	0	0	0	0	0
R/W	R/W	R/W	R/W	R/W	R/W	R/W	R	R/W	R/W	R/W	R/W	R/W	R/W	R/W	R/W	R/W

Bit	15	14	13	12	11	10	9	8	7	6	5	4	3	2	1	0
	ECMNMIE015	ECMNMIE014	—	ECMNMIE012	ECMNMIE011	ECMNMIE010	ECMNMIE009	ECMNMIE008	ECMNMIE007	ECMNMIE006	ECMNMIE005	ECMNMIE004	—	—	ECMNMIE001	ECMNMIE000
Value after reset	0	0	0	0	0	0	0	0	0	0	0	0	0	0	0	0
R/W	R/W	R/W	R	R/W	R/W	R/W	R/W	R/W	R/W	R/W	R/W	R/W	R	R	R/W	R/W

Table 32.16 ECMNMICFG0 Register Contents

Bit Position	Bit Name	Function
31 to 26	ECMNMIE031 to ECMNMIE026	ECM FE Level Interrupt Generation Control ECMNMIE031 to ECMNMIE026 correspond to error sources 31 to 26. 0: Interrupt generation disabled 1: Interrupt generation enabled
25	Reserved	When read, the value after reset is read. When writing, write the value after reset.
24 to 14	ECMNMIE024 to ECMNMIE014	ECM FE Level Interrupt Generation Control ECMNMIE024 to ECMNMIE014 correspond to error sources 24 to 14. 0: Interrupt generation disabled 1: Interrupt generation enabled
13	Reserved	When read, the value after reset is read. When writing, write the value after reset.
12 to 4	ECMNMIE012 to ECMNMIE004	ECM FE Level Interrupt Generation Control ECMNMIE012 to ECMNMIE004 correspond to error sources 12 to 4. 0: Interrupt generation disabled 1: Interrupt generation enabled
3, 2	Reserved	When read, the value after reset is read. When writing, write the value after reset.
1, 0	ECMNMIE001, ECMNMIE000	ECM FE Level Interrupt Generation Control ECMNMIE001 and ECMNMIE000 correspond to error sources 1 and 0. 0: Interrupt generation disabled 1: Interrupt generation enabled

32.3.10 ECMNMICFG1 — ECM FE Level Interrupt Configuration Register 1

The ECM FE level interrupt configuration register 1 is used to set the generation of FE level interrupts. The generation of FE level interrupts in response to errors is selectable.

Writing to this register is protected by a special sequence of instructions by using the protection command register ECMPCMD1. For details, see **Section 4.3, Write-Protected Registers**.

Access: This register can be read/written in 32-bit units.

Address: <ECM_base> + 10_H

Value after reset: $0000\ 0000_H$

Bit	31	30	29	28	27	26	25	24	23	22	21	20	19	18	17	16
	—	—	—	—	—	—	—	—	—	—	—	—	—	—	—	—
Value after reset	0	0	0	0	0	0	0	0	0	0	0	0	0	0	0	0
R/W	R	R	R	R	R	R	R	R	R	R	R	R	R	R	R	R

Bit	15	14	13	12	11	10	9	8	7	6	5	4	3	2	1	0
	—	—	—	—	—	ECMNMIE110	ECMNMIE109	ECMNMIE108	ECMNMIE107	ECMNMIE106	ECMNMIE105	ECMNMIE104	—	ECMNMIE102	ECMNMIE101	ECMNMIE100
Value after reset	0	0	0	0	0	0	0	0	0	0	0	0	0	0	0	0
R/W	R	R	R	R	R	R/W	R/W	R/W	R/W	R/W	R/W	R/W	R	R/W	R/W	R/W

Table 32.17 ECMNMICFG1 Register Contents

Bit Position	Bit Name	Function
31 to 11	Reserved	When read, the value after reset is read. When writing, write the value after reset.
10 to 4	ECMNMIE110 to ECMNMIE104	ECM FE Level Interrupt Generation Control ECMNMIE110 to ECMNMIE104 correspond to error sources 42 to 36. 0: Interrupt generation disabled 1: Interrupt generation enabled
3	Reserved	When read, the value after reset is read. When writing, write the value after reset.
2 to 0	ECMNMIE102 to ECMNMIE100	ECM FE Level Interrupt Generation Control ECMNMIE102 to ECMNMIE100 correspond to error sources 34 to 32. 0: Interrupt generation disabled 1: Interrupt generation enabled

32.3.11 ECMIRCFG0 — ECM Internal Reset Configuration Register 0

The ECM internal reset configuration register 0 is used to set the generation of internal resets (ECMRES) in response to internal errors.

Writing to this register is protected by a special sequence of instructions by using the protection command register ECMPCMD1. For details, see **Section 4.3, Write-Protected Registers**.

Access: This register can be read/written in 32-bit units.

Address: <ECM_base> + 14_H

Value after reset: $0000\ 000F_H$

Bit	31	30	29	28	27	26	25	24	23	22	21	20	19	18	17	16
	ECMIRE031	ECMIRE030	ECMIRE029	ECMIRE028	ECMIRE027	ECMIRE026	—	ECMIRE024	ECMIRE023	ECMIRE022	ECMIRE021	ECMIRE020	ECMIRE019	ECMIRE018	ECMIRE017	ECMIRE016
Value after reset	0	0	0	0	0	0	0	0	0	0	0	0	0	0	0	0
R/W	R/W	R/W	R/W	R/W	R/W	R/W	R	R/W	R/W	R/W	R/W	R/W	R/W	R/W	R/W	R/W

Bit	15	14	13	12	11	10	9	8	7	6	5	4	3	2	1	0
	ECMIRE015	ECMIRE014	—	ECMIRE012	ECMIRE011	ECMIRE010	ECMIRE009	ECMIRE008	ECMIRE007	ECMIRE006	ECMIRE005	ECMIRE004	—	—	ECMIRE001	ECMIRE000
Value after reset	0	0	0	0	0	0	0	0	0	0	0	0	1	1	1	1
R/W	R/W	R/W	R	R/W	R/W	R/W	R/W	R/W	R/W	R/W	R/W	R/W	R	R	R/W	R/W

Table 32.18 ECMIRCFG0 Register Contents

Bit Position	Bit Name	Function
31 to 26	ECMIRE031 to ECMIRE026	ECM Internal Reset (ECMRES) Generation Control ECMIRE031 to ECMIRE026 correspond to error sources 31 to 26. 0: internal reset (ECMRES) generation disabled 1: internal reset (ECMRES) generation enabled
25	Reserved	When read, the value after reset is read. When writing, write the value after reset.
24 to 14	ECMIRE024 to ECMIRE014	ECM Internal Reset (ECMRES) Generation Control ECMIRE024 to ECMIRE014 correspond to error sources 24 to 14. 0: Internal reset (ECMRES) generation disabled 1: Internal reset (ECMRES) generation enabled
13	Reserved	When read, the value after reset is read. When writing, write the value after reset.
12 to 4	ECMIRE012 to ECMIRE004	ECM Internal Reset (ECMRES) Generation Control ECMIRE012 to ECMIRE004 correspond to error sources 12 to 4. 0: Internal reset (ECMRES) generation disabled 1: Internal reset (ECMRES) generation enabled
3, 2	Reserved	When read, the value after reset is read. When writing, write the value after reset.
1, 0	ECMIRE001, ECMIRE000	ECM Internal Reset (ECMRES) Generation Control ECMIRE001 and ECMIRE000 correspond to error sources 1 and 0. 0: Internal reset (ECMRES) generation disabled 1: Internal reset (ECMRES) generation enabled

32.3.12 ECMIRCFG1 — ECM Internal Reset Configuration Register 1

The ECM internal reset configuration register 1 is used to set the generation of internal resets (ECMRES) in response to internal errors.

Writing to this register is protected by a special sequence of instructions by using the protection command register ECMPCMD1. For details, see **Section 4.3, Write-Protected Registers**.

Access: This register can be read/written in 32-bit units.

Address: <ECM_base> + 18_H

Value after reset: $0000\ 0000_H$

Bit	31	30	29	28	27	26	25	24	23	22	21	20	19	18	17	16
	—	—	ECMIRE129	—	—	—	—	—	—	—	—	—	—	—	—	—
Value after reset	0	0	0	0	0	0	0	0	0	0	0	0	0	0	0	0
R/W	R	R	R/W	R	R	R	R	R	R	R	R	R	R	R	R	R

Bit	15	14	13	12	11	10	9	8	7	6	5	4	3	2	1	0
	—	—	—	—	—	ECMIRE110	ECMIRE109	ECMIRE108	ECMIRE107	ECMIRE106	ECMIRE105	ECMIRE104	—	ECMIRE102	ECMIRE101	ECMIRE100
Value after reset	0	0	0	0	0	0	0	0	0	0	0	0	0	0	0	0
R/W	R	R	R	R	R	R/W	R/W	R/W	R/W	R/W	R/W	R/W	R	R/W	R/W	R/W

Table 32.19 ECMIRCFG1 Register Contents

Bit Position	Bit Name	Function
31, 30	Reserved	When read, the value after reset is read. When writing, write the value after reset.
29	ECMIRE129	ECM Internal Reset (ECMRES) Generation Control Corresponds to delay timer overflow. 0: internal reset (ECMRES) generation disabled 1: Internal reset (ECMRES) generation enabled
28 to 11	Reserved	When read, the value after reset is read. When writing, write the value after reset.
10 to 4	ECMIRE110 to ECMIRE104	ECM Internal Reset (ECMRES) Generation Control ECMIRE110 to ECMIRE104 correspond to error sources 42 to 36. 0: Internal reset (ECMRES) generation disabled 1: Internal reset (ECMRES) generation enabled
3	Reserved	When read, the value after reset is read. When writing, write the value after reset.
2 to 0	ECMIRE102 to ECMIRE100	ECM Internal Reset (ECMRES) Generation Control ECMIRE102 to ECMIRE100 correspond to error sources 34 to 32. 0: Internal reset (ECMRES) generation disabled 1: Internal reset (ECMRES) generation enabled

32.3.13 ECMEMK0 — ECM Error Mask Register 0

The ECM error mask register 0 is used to mask the individual error sources of the ERROROUT output.

Writing to this register is protected by a special sequence of instructions by using the protection command register ECMPCMD1. For details, see **Section 4.3, Write-Protected Registers**.

Access: This register can be read/written in 32-bit units.

Address: <ECM_base> + $1C_H$

Value after reset: $0000\ 0000_H$

Bit	31	30	29	28	27	26	25	24	23	22	21	20	19	18	17	16
	ECMEMK031	ECMEMK030	ECMEMK029	ECMEMK028	ECMEMK027	ECMEMK026	—	ECMEMK024	ECMEMK023	ECMEMK022	ECMEMK021	ECMEMK020	ECMEMK019	ECMEMK018	ECMEMK017	ECMEMK016
Value after reset	0	0	0	0	0	0	0	0	0	0	0	0	0	0	0	0
R/W	R/W	R/W	R/W	R/W	R/W	R/W	R	R/W	R/W	R/W	R/W	R/W	R/W	R/W	R/W	R/W

Bit	15	14	13	12	11	10	9	8	7	6	5	4	3	2	1	0
	ECMEMK015	ECMEMK014	—	ECMEMK012	ECMEMK011	ECMEMK010	ECMEMK009	ECMEMK008	ECMEMK007	ECMEMK006	ECMEMK005	ECMEMK004	—	—	ECMEMK001	ECMEMK000
Value after reset	0	0	0	0	0	0	0	0	0	0	0	0	0	0	0	0
R/W	R/W	R/W	R	R/W	R/W	R/W	R/W	R/W	R/W	R/W	R/W	R/W	R	R	R/W	R/W

Table 32.20 ECMEMK0 Register Contents

Bit Position	Bit Name	Function
31 to 26	ECMEMK031 to ECMEMK026	ERROROUT Output Mask Control ECMEMK031 to ECMEMK026 correspond to error sources 31 to 26. 0: ERROROUT output not masked 1: ERROROUT output masked
25	Reserved	When read, the value after reset is read. When writing, write the value after reset.
24 to 14	ECMEMK024 to ECMEMK014	ERROROUT Output Mask Control ECMEMK024 to ECMEMK014 correspond to error sources 24 to 14. 0: ERROROUT output not masked 1: ERROROUT output masked
13	Reserved	When read, the value after reset is read. When writing, write the value after reset.
12 to 4	ECMEMK012 to ECMEMK004	ERROROUT Output Mask Control ECMEMK012 to ECMEMK004 correspond to error sources 12 to 4. 0: ERROROUT output not masked 1: ERROROUT output masked
3, 2	Reserved	When read, the value after reset is read. When writing, write the value after reset.
1, 0	ECMEMK001, ECMEMK000	ERROROUT Output Signal Mask Control ECMEMK001 and ECMEMK000 correspond to error sources 1 and 0. 0: Error signal output not masked 1: Error signal output masked

32.3.14 ECMEMK1 — ECM Error Mask Register 1

The ECM error mask register 1 is used to mask the individual error sources of the ERROROUT output. Writing to this register is protected by a sequence of instructions.

Writing to this register is protected by a special sequence of instructions by using the protection command register ECMPCMD1. For details, see **Section 4.3, Write-Protected Registers**.

Access: This register can be read/written in 32-bit units.

Address: <ECM_base> + 20_H

Value after reset: $0000\ 0000_H$

Bit	31	30	29	28	27	26	25	24	23	22	21	20	19	18	17	16
	—	—	ECMEMK129	—	—	—	—	—	—	—	—	—	—	—	—	—
Value after reset	0	0	0	0	0	0	0	0	0	0	0	0	0	0	0	0
R/W	R	R	R/W	R	R	R	R	R	R	R	R	R	R	R	R	R

Bit	15	14	13	12	11	10	9	8	7	6	5	4	3	2	1	0
	—	—	—	—	—	ECMEMK110	ECMEMK109	ECMEMK108	ECMEMK107	ECMEMK106	ECMEMK105	ECMEMK104	—	ECMEMK102	ECMEMK101	ECMEMK100
Value after reset	0	0	0	0	0	0	0	0	0	0	0	0	0	0	0	0
R/W	R	R	R	R	R	R/W	R/W	R/W	R/W	R/W	R/W	R/W	R	R/W	R/W	R/W

Table 32.21 ECMEMK1 Register Contents

Bit Position	Bit Name	Function
31, 30	Reserved	When read, the value after reset is read. When writing, write the value after reset.
29	ECMEMK129	ERROROUT Output Mask Control Corresponds to delay timer overflow. 0: ERROROUT output not masked 1: ERROROUT output masked
28 to 11	Reserved	When read, the value after reset is read. When writing, write the value after reset.
10 to 4	ECMEMK110 to ECMEMK104	ERROROUT Output Mask Control ECMEMK110 to ECMEMK104 correspond to error sources 42 to 36. 0: ERROROUT output not masked 1: ERROROUT output masked
3	Reserved	When read, the value after reset is read. When writing, write the value after reset.
2 to 0	ECMEMK102 to ECMEMK100	ERROROUT Output Mask Control ECMEMK102 to ECMEMK100 correspond to error sources 34 to 32. 0: ERROROUT output not masked 1: ERROROUT output masked

32.3.15 ECMESSTC0 — ECM Error Source Status Clear Trigger Register 0

The ECM error source status clear trigger register 0 is used to clear the individual error source status of the ECM master/checker error source status register 0. Both the error status of the ECM master and the ECM checker are cleared simultaneously.

Writing to this register is protected by a special sequence of instructions by using the protection command register ECMPCMD1. For details, see **Section 4.3, Write-Protected Registers**.

Access: This register can be written in 32-bit units.

Address: <ECM_base> + 24_H

Value after reset: $0000\ 0000_H$

Bit	31	30	29	28	27	26	25	24	23	22	21	20	19	18	17	16
	ECMCLSSE031	ECMCLSSE030	ECMCLSSE029	ECMCLSSE028	ECMCLSSE027	ECMCLSSE026	—	ECMCLSSE024	ECMCLSSE023	ECMCLSSE022	ECMCLSSE021	ECMCLSSE020	ECMCLSSE019	ECMCLSSE018	ECMCLSSE017	ECMCLSSE016
Value after reset	0	0	0	0	0	0	0	0	0	0	0	0	0	0	0	0
R/W	W	W	W	W	W	W	R	W	W	W	W	W	W	W	W	W

Bit	15	14	13	12	11	10	9	8	7	6	5	4	3	2	1	0
	ECMCLSSE015	ECMCLSSE014	—	ECMCLSSE012	ECMCLSSE011	ECMCLSSE010	ECMCLSSE009	ECMCLSSE008	ECMCLSSE007	ECMCLSSE006	ECMCLSSE005	ECMCLSSE004	—	—	ECMCLSSE001	ECMCLSSE000
Value after reset	0	0	0	0	0	0	0	0	0	0	0	0	0	0	0	0
R/W	W	W	R	W	W	W	W	W	W	W	W	W	R	R	W	W

Table 32.22 ECMESSTC0 Register Contents

Bit Position	Bit Name	Function
31 to 26	ECMCLSSE031 to ECMCLSSE026	ECM Error Status Clear ECMCLSSE031 to ECMCLSSE026 correspond to error sources 31 to 26. 0: Corresponding error status unchanged 1: Corresponding error status cleared
25	Reserved	When writing, write the value after reset.
24 to 14	ECMCLSSE024 to ECMCLSSE014	ECM Error Status Clear ECMCLSSE024 to ECMCLSSE014 correspond to error sources 24 to 14. 0: Corresponding error status unchanged 1: Corresponding error status cleared
13	Reserved	When writing, write the value after reset.
12 to 4	ECMCLSSE012 to ECMCLSSE004	ECM Error Status Clear ECMCLSSE012 to ECMCLSSE004 correspond to error sources 12 to 4. 0: Corresponding error status unchanged 1: Corresponding error status cleared
3, 2	Reserved	When writing, write the value after reset.
1, 0	ECMCLSSE001, ECMCLSSE000	ECM Error Status Clear ECMCLSSE001 and ECMCLSSE000 correspond to error sources 1 and 0. 0: Corresponding error status unchanged 1: Corresponding error status cleared

32.3.16 ECMESSTC1 — ECM Error Source Status Clear Trigger Register 1

The ECM error source status clear trigger register 1 is used to clear the individual error source status of the ECM master/checker error source status register 1. Both the error status of the ECM master and the ECM checker are cleared simultaneously.

Writing to this register is protected by a special sequence of instructions by using the protection command register ECMPCMD1. For details, see **Section 4.3, Write-Protected Registers**.

Access: This register can be written in 32-bit units.

Address: <ECM_base> + 28_H

Value after reset: $0000\ 0000_H$

Bit	31	30	29	28	27	26	25	24	23	22	21	20	19	18	17	16
	—	ECMCLSSE130	ECMCLSSE129	—	—	—	—	—	—	—	—	—	—	—	—	—
Value after reset	0	0	0	0	0	0	0	0	0	0	0	0	0	0	0	0
R/W	R	W	W	R	R	R	R	R	R	R	R	R	R	R	R	R

Bit	15	14	13	12	11	10	9	8	7	6	5	4	3	2	1	0
	—	—	—	—	—	ECMCLSSE110	ECMCLSSE109	ECMCLSSE108	ECMCLSSE107	ECMCLSSE106	ECMCLSSE105	ECMCLSSE104	—	ECMCLSSE102	ECMCLSSE101	ECMCLSSE100
Value after reset	0	0	0	0	0	0	0	0	0	0	0	0	0	0	0	0
R/W	R	R	R	R	R	W	W	W	W	W	W	W	R	W	W	W

Table 32.23 ECMESSTC1 Register Contents

Bit Position	Bit Name	Function
31	Reserved	When writing, write the value after reset.
30, 29	ECMCLSSE130, ECMCLSSE129	ECM Error Status Clear ECMCLSSE130 and ECMCLSSE129 correspond to the write status and delay timer overflow of the ECMmESET register. 0: Corresponding error status unchanged 1: Corresponding error status cleared
28 to 11	Reserved	When writing, write the value after reset.
10 to 4	ECMCLSSE110 to ECMCLSSE104	ECM Error Status Clear ECMCLSSE110 to ECMCLSSE104 correspond to error sources 42 to 36. 0: Corresponding error status unchanged 1: Corresponding error status cleared
3	Reserved	When writing, write the value after reset.
2 to 0	ECMCLSSE102 to ECMCLSSE100	ECM Error Status Clear ECMCLSSE102 to ECMCLSSE100 correspond to error sources 34 to 32. 0: Corresponding error status unchanged 1: Corresponding error status cleared

32.3.17 ECMPE0 — ECM Pseudo Error Trigger Register 0

The ECM pseudo error trigger register 0 is used to generate a pseudo error for test purposes. The ECM operation in response to the generation of a pseudo error is identical to that in response to a real error source.

Writing to this register is protected by a special sequence of instructions by using the protection command register ECMPCMD1. For details, see **Section 4.3, Write-Protected Registers**.

Access: This register can be written in 32-bit units.

Address: <ECM_base> + 34_H

Value after reset: $0000\ 0000_H$

Bit	31	30	29	28	27	26	25	24	23	22	21	20	19	18	17	16
	ECMPE031	ECMPE030	ECMPE029	ECMPE028	ECMPE027	ECMPE026	—	ECMPE024	ECMPE023	ECMPE022	ECMPE021	ECMPE020	ECMPE019	ECMPE018	ECMPE017	ECMPE016
Value after reset	0	0	0	0	0	0	0	0	0	0	0	0	0	0	0	0
R/W	W	W	W	W	W	W	R	W	W	W	W	W	W	W	W	W

Bit	15	14	13	12	11	10	9	8	7	6	5	4	3	2	1	0
	ECMPE015	ECMPE014	—	ECMPE012	ECMPE011	ECMPE010	ECMPE009	ECMPE008	ECMPE007	ECMPE006	ECMPE005	ECMPE004	—	—	ECMPE001	ECMPE000
Value after reset	0	0	0	0	0	0	0	0	0	0	0	0	0	0	0	0
R/W	W	W	R	W	W	W	W	W	W	W	W	W	R	R	W	W

Table 32.24 ECMPE0 Register Contents

Bit Position	Bit Name	Function
31 to 26	ECMPE031 to ECMPE026	ECM pseudo error trigger ECMPE031 to ECMPE026 correspond to error sources 31 to 26. 0: Pseudo error not generated 1: Corresponding pseudo error generated
25	Reserved	When writing, write the value after reset.
24 to 14	ECMPE024 to ECMPE014	ECM pseudo error trigger ECMPE024 to ECMPE014 correspond to error sources 24 to 14. 0: Pseudo error not generated 1: Corresponding pseudo error generated
13	Reserved	When writing, write the value after reset.
12 to 4	ECMPE012 to ECMPE004	ECM pseudo error trigger ECMPE012 to ECMPE004 correspond to error sources 12 to 4. 0: Pseudo error not generated 1: Corresponding pseudo error generated
3, 2	Reserved	When writing, write the value after reset.
1, 0	ECMPE001, ECMPE000	ECM Pseudo Error Trigger Clear ECMPE001 and ECMPE000 correspond to error sources 1 and 0. 0: Pseudo error not generated 1: Corresponding pseudo error generated

32.3.18 ECMPE1 — ECM Pseudo Error Trigger Register 1

The ECM pseudo error trigger register 1 is used to generate a pseudo error for test purposes. The ECM operation in response to the generation of a pseudo error is identical to that in response to a real error source.

Writing to this register is protected by a special sequence of instructions by using the protection command register ECMPCMD1. For details, see **Section 4.3, Write-Protected Registers**.

Access: This register can be written in 32-bit units.

Address: <ECM_base> + 38_H

Value after reset: $0000\ 0000_H$

Bit	31	30	29	28	27	26	25	24	23	22	21	20	19	18	17	16
	—	—	ECMPE 129	—	—	—	—	—	—	—	—	—	—	—	—	—
Value after reset	0	0	0	0	0	0	0	0	0	0	0	0	0	0	0	0
R/W	R	R	W	R	R	R	R	R	R	R	R	R	R	R	R	R

Bit	15	14	13	12	11	10	9	8	7	6	5	4	3	2	1	0
	—	—	—	—	—	ECMPE 110	ECMPE 109	ECMPE 108	ECMPE 107	ECMPE 106	ECMPE 105	ECMPE 104	—	ECMPE 102	ECMPE 101	ECMPE 100
Value after reset	0	0	0	0	0	0	0	0	0	0	0	0	0	0	0	0
R/W	R	R	R	R	R	W	W	W	W	W	W	W	R	W	W	W

Table 32.25 ECMPE1 Register Contents

Bit Position	Bit Name	Function
31, 30	Reserved	When writing, write the value after reset.
29	ECMPE129	ECM Pseudo Error Trigger Corresponds to delay timer overflow. 0: Pseudo error not generated 1: Corresponding pseudo error generated
28 to 11	Reserved	When writing, write the value after reset.
10 to 4	ECMPE110 to ECMPE104	ECM Pseudo Error Trigger ECMPE110 to ECMPE104 correspond to error sources 42 to 36. 0: Pseudo error not generated 1: Corresponding pseudo error generated
3	Reserved	When writing, write the value after reset.
2 to 0	ECMPE102 to ECMPE100	ECM Pseudo Error Trigger ECMPE102 to ECMPE100 correspond to error sources 34 to 32. 0: Pseudo error not generated 1: Corresponding pseudo error generated

32.3.19 ECMDTMCTL — ECM Delay Timer Control Register

The ECM delay timer control register is used to control the delay timer.

Writing to this register is protected by a special sequence of instructions by using the protection command register ECMPCMD1. For details, see **Section 4.3, Write-Protected Registers**.

Access: This register can be written in 8-bit units.

Address: <ECM_base> + $3C_H$

Value after reset: 00_H

Bit	7	6	5	4	3	2	1	0
	—	—	—	—	—	—	ECMSTP	ECMSTA
Value after reset	0	0	0	0	0	0	0	0
R/W	R	R	R	R	R	R	W	W

Table 32.26 ECMDTMCTL Register Contents

Bit Position	Bit Name	Function
7 to 2	Reserved	When writing, write the value after reset.
1	ECMSTP	Delay Timer Stop Writing 1 to this bit initializes the delay timer register, causing the delay timer to stop. Simultaneously, the ECMSTA bit is set to 0.
0	ECMSTA	Delay Timer Start Writing 1 to this bit starts delay timer counting upon occurrence of an interrupt. (Writing 0 to this bit stops the delay timer).

32.3.20 ECMDTMR — ECM Delay Timer Register

The ECM delay timer register indicates the value of the delay timer counter. The ECM delay timer register is initialized by setting the ECMSTA bit of the ECM delay timer control register from 1 (timer in operation) to 0 (timer stops). The ECM delay timer uses a high-speed peripheral clock signal for counting.

Access: This register can be read in 16-bit units.

Address: <ECM_base> + 40_H

Value after reset: 0000_H

Bit	15	14	13	12	11	10	9	8	7	6	5	4	3	2	1	0
	ECMDTMR[15:0]															
Value after reset	0	0	0	0	0	0	0	0	0	0	0	0	0	0	0	0
R/W	R	R	R	R	R	R	R	R	R	R	R	R	R	R	R	R

32.3.21 ECMDTMCMP — ECM Delay Timer Compare Register

When the value of the ECM delay timer compare register matches with the value of the delay timer counter, the ECMmSSE129 bit is set. Writing data to this register has to be conducted while the delay timer is stopped.

Writing to this register is protected by a special sequence of instructions by using the protection command register ECMPCMD1. For details, see **Section 4.3, Write-Protected Registers**.

Access: This register can be read/written in 16-bit units.

Address: <ECM_base> + 44_H

Value after reset: 0000_H

Bit	15	14	13	12	11	10	9	8	7	6	5	4	3	2	1	0
	ECMDTMCMP[15:0]															
Value after reset	0	0	0	0	0	0	0	0	0	0	0	0	0	0	0	0
R/W	R/W	R/W	R/W	R/W	R/W	R/W	R/W	R/W	R/W	R/W	R/W	R/W	R/W	R/W	R/W	R/W

32.3.22 ECMDTMCFG0 — ECM Delay Timer Configuration Register 0

The ECM delay timer configuration register 0 is used to set enable/disable of the delay timer start caused by EI level interrupts in response to errors. Writing to this register is protected by a sequence of instructions.

Writing to this register is protected by a special sequence of instructions by using the protection command register ECMPCMD1. For details, see **Section 4.3, Write-Protected Registers**.

Do not set the delay timer for clock monitor upper limit/lower limit errors (errors no. 4 to 11).

Access: This register can be read/written in 32-bit units.

Address: <ECM_base> + 48_H

Value after reset: $0000\ 0000_H$

Bit	31	30	29	28	27	26	25	24	23	22	21	20	19	18	17	16
	ECMTE031	ECMTE030	ECMTE029	ECMTE028	ECMTE027	ECMTE026	—	ECMTE024	ECMTE023	ECMTE022	ECMTE021	ECMTE020	ECMTE019	ECMTE018	ECMTE017	ECMTE016
Value after reset	0	0	0	0	0	0	0	0	0	0	0	0	0	0	0	0
R/W	R/W	R/W	R/W	R/W	R/W	R/W	R	R/W	R/W	R/W	R/W	R/W	R/W	R/W	R/W	R/W

Bit	15	14	13	12	11	10	9	8	7	6	5	4	3	2	1	0
	ECMTE015	ECMTE014	—	ECMTE012	ECMTE011	ECMTE010	ECMTE009	ECMTE008	ECMTE007	ECMTE006	ECMTE005	ECMTE004	—	—	ECMTE001	ECMTE000
Value after reset	0	0	0	0	0	0	0	0	0	0	0	0	0	0	0	0
R/W	R/W	R/W	R	R/W	R/W	R/W	R/W	R/W	R/W	R/W	R/W	R/W	R	R	R/W	R/W

Table 32.27 ECMDTMCFG0 Register Contents

Bit Position	Bit Name	Function
31 to 26	ECMTE031 to ECMTE026	ECM Delay Timer Start Control ECMTE031 to ECMTE026 correspond to EI level interrupts generated by error sources 31 to 26. 0: Delay timer start disabled 1: Delay timer start enabled
25	Reserved	When read, the value after reset is read. When writing, write the value after reset.
24 to 14	ECMTE024 to ECMTE014	ECM Delay Timer Start Control ECMTE024 to ECMTE014 correspond to EI level interrupts generated by error sources 24 to 14. 0: Delay timer start disabled 1: Delay timer start enabled
13	Reserved	When read, the value after reset is read. When writing, write the value after reset.
12 to 4	ECMTE012 to ECMTE004	ECM Delay Timer Start Control ECMTE012 to ECMTE004 correspond to EI level interrupts generated by error sources 24 to 4. 0: Delay timer start disabled 1: Delay timer start enabled
3, 2	Reserved	When read, the value after reset is read. When writing, write the value after reset.
1, 0	ECMTE001, ECMTE000	ECM Delay Timer Start Control ECMTE001 and ECMTE000 correspond to EI level interrupts generated by error sources 1 and 0. 0: Delay timer start disabled 1: Delay timer start enabled

32.3.23 ECMDTMCFG1 — ECM Delay Timer Configuration Register 1

The ECM delay timer configuration register 1 is used to set enable/disable of the delay timer start caused by EI level interrupts in response to errors.

Writing to this register is protected by a special sequence of instructions by using the protection command register ECMPCMD1. For details, see **Section 4.3, Write-Protected Registers**.

Do not set the delay timer for clock monitor upper limit/lower limit errors (errors no. 4 to 11).

Access: This register can be read/written in 32-bit units.

Address: <ECM_base> + $4C_H$

Value after reset: $0000\ 0000_H$

Bit	31	30	29	28	27	26	25	24	23	22	21	20	19	18	17	16
	—	—	—	—	—	—	—	—	—	—	—	—	—	—	—	—
Value after reset	0	0	0	0	0	0	0	0	0	0	0	0	0	0	0	0
R/W	R	R	R	R	R	R	R	R	R	R	R	R	R	R	R	R

Bit	15	14	13	12	11	10	9	8	7	6	5	4	3	2	1	0
	—	—	—	—	—	ECMTE110	ECMTE109	ECMTE108	ECMTE107	ECMTE106	ECMTE105	ECMTE104	—	ECMTE102	ECMTE101	ECMTE100
Value after reset	0	0	0	0	0	0	0	0	0	0	0	0	0	0	0	0
R/W	R	R	R	R	R	R/W	R/W	R/W	R/W	R/W	R/W	R/W	R	R/W	R/W	R/W

Table 32.28 ECMDTMCFG1 Register Contents

Bit Position	Bit Name	Function
31 to 11	Reserved	When read, the value after reset is read. When writing, write the value after reset.
10 to 4	ECMTE110 to ECMTE104	ECM Delay Timer Start Control ECMTE110 to ECMTE104 correspond to EI level interrupts generated by error sources 42 to 36. 0: Delay timer start disabled 1: Delay timer start enabled
3	Reserved	When read, the value after reset is read. When writing, write the value after reset.
2 to 0	ECMTE102 to ECMTE100	ECM Delay Timer Start Control ECMTE102 to ECMTE100 correspond to EI level interrupts generated by error sources 34 to 32. 0: Delay timer start disabled 1: Delay timer start enabled

32.3.24 ECMDTMCFG2 — ECM Delay Timer Configuration Register 2

The ECM delay timer configuration register 2 is used to set enable/disable of the delay timer start caused by FE level interrupts in response to errors.

Writing to this register is protected by a special sequence of instructions by using the protection command register ECMPCMD1. For details, see **Section 4.3, Write-Protected Registers**.

Do not set the delay timer for clock monitor upper limit/lower limit errors (errors no. 4 to 11).

Access: This register can be read/written in 32-bit units.

Address: <ECM_base> + 50_H

Value after reset: $0000\ 0000_H$

Bit	31	30	29	28	27	26	25	24	23	22	21	20	19	18	17	16
	ECMTE231	ECMTE230	ECMTE229	ECMTE228	ECMTE227	ECMTE226	—	ECMTE224	ECMTE223	ECMTE222	ECMTE221	ECMTE220	ECMTE219	ECMTE218	ECMTE217	ECMTE216
Value after reset	0	0	0	0	0	0	0	0	0	0	0	0	0	0	0	0
R/W	R/W	R/W	R/W	R/W	R/W	R/W	R	R/W	R/W	R/W	R/W	R/W	R/W	R/W	R/W	R/W

Bit	15	14	13	12	11	10	9	8	7	6	5	4	3	2	1	0
	ECMTE215	ECMTE214	—	ECMTE212	ECMTE211	ECMTE210	ECMTE209	ECMTE208	ECMTE207	ECMTE206	ECMTE205	ECMTE204	—	—	ECMTE201	ECMTE200
Value after reset	0	0	0	0	0	0	0	0	0	0	0	0	0	0	0	0
R/W	R/W	R/W	R	R/W	R/W	R/W	R/W	R/W	R/W	R/W	R/W	R/W	R	R	R/W	R/W

Table 32.29 ECMDTMCFG2 Register Contents

Bit Position	Bit Name	Function
31 to 26	ECMTE231 to ECMTE226	ECM Delay Timer Start Control ECMTE231 to ECMTE226 correspond to FE level interrupts generated by error sources 31 to 26. 0: Delay timer start disabled 1: Delay timer start enabled
25	Reserved	When read, the value after reset is read. When writing, write the value after reset.
24 to 14	ECMTE224 to ECMTE214	ECM Delay Timer Start Control ECMTE224 to ECMTE214 correspond to FE level interrupts generated by error sources 24 to 14. 0: Delay timer start disabled 1: Delay timer start enabled
13	Reserved	When read, the value after reset is read. When writing, write the value after reset.
12 to 4	ECMTE212 to ECMTE204	ECM Delay Timer Start Control ECMTE212 to ECMTE204 correspond to FE level interrupts generated by error sources 12 to 4. 0: Delay timer start disabled 1: Delay timer start enabled
3, 2	Reserved	When read, the value after reset is read. When writing, write the value after reset.
1, 0	ECMTE201, ECMTE200	ECM Delay Timer Start Control ECMTE201 and ECMTE200 correspond to FE level interrupts generated by error sources 1 and 0. 0: Delay timer start disabled 1: Delay timer start enabled

32.3.25 ECMDTMCFG3 — ECM Delay Timer Configuration Register 3

The ECM delay timer configuration register 3 enables or disables the delay timer start caused by FE level interrupts in response to errors.

Writing to this register is protected by a special sequence of instructions by using the protection command register ECMPCMD1. For details, see **Section 4.3, Write-Protected Registers**.

Do not set the delay timer for clock monitor upper limit/lower limit errors (errors no. 4 to 11).

Access: This register can be read/written in 32-bit units.

Address: <ECM_base> + 54_H

Value after reset: $0000\ 0000_H$

Bit	31	30	29	28	27	26	25	24	23	22	21	20	19	18	17	16
	—	—	—	—	—	—	—	—	—	—	—	—	—	—	—	—
Value after reset	0	0	0	0	0	0	0	0	0	0	0	0	0	0	0	0
R/W	R	R	R	R	R	R	R	R	R	R	R	R	R	R	R	R

Bit	15	14	13	12	11	10	9	8	7	6	5	4	3	2	1	0
	—	—	—	—	—	ECMTE310	ECMTE309	ECMTE308	ECMTE307	ECMTE306	ECMTE305	ECMTE304	—	ECMTE302	ECMTE301	ECMTE300
Value after reset	0	0	0	0	0	0	0	0	0	0	0	0	0	0	0	0
R/W	R	R	R	R	R	R/W	R/W	R/W	R/W	R/W	R/W	R/W	R	R/W	R/W	R/W

Table 32.30 ECMDTMCFG3 Register Contents

Bit Position	Bit Name	Function
31 to 11	Reserved	When read, the value after reset is read. When writing, write the value after reset.
10 to 4	ECMTE310 to ECMTE304	ECM Delay Timer Start Control ECMTE310 to ECMTE304 correspond to FE level interrupts generated by error sources 42 to 36. 0: Delay timer start disabled 1: Delay timer start enabled
3	Reserved	When read, the value after reset is read. When writing, write the value after reset.
2 to 0	ECMTE302 to ECMTE300	ECM Delay Timer Start Control ECMTE302 to ECMTE300 correspond to FE level interrupts generated by error sources 34 to 32. 0: Delay timer start disabled 1: Delay timer start enabled

32.3.26 ECMEPCTL — ECM Error Pulse Control Register

This register selects the timer output in dynamic mode.

Access: This register can be read/written in 8-bit units.

Address: FFD6 3000_H

Value after reset: 00_H

Bit	7	6	5	4	3	2	1	0
	—	—	—	—	—	—	—	ECMTMSL
Value after reset	0	0	0	0	0	0	0	0
R/W	R	R	R	R	R	R	R	R/W

Table 32.31 ECMEPCTL Register Contents

Bit Position	Bit Name	Function
7 to 1	Reserved	When read, the value after reset is read. When writing, write the value after reset.
0	ECMTMSL	Timer Output Selection to $\overline{\text{ERROROUT}}$ Pin 0: Channel 15 in TAUD1 1: OSTM1

Section 33 Data CRC (DCRA)

This section contains a generic description of the Data CRC function A (DCRA).

The first part of this section describes all RH850/P1x specific properties, such as the number of units, register base addresses, etc.

The remainder of the section describes the functions and registers of the DCRA.

33.1 Features of RH850/P1x DCRA

33.1.1 Number of Units

This microcontroller has the following number of DCRA units.

Table 33.1 Units

Product	RH850/P1x 100 pins	RH850/P1x 144 pins
Number of Units	4	4
Name	DCRAn (n = 0 to 3)	DCRAn (n = 0 to 3)

Table 33.2 DCRA Unit Configurations and Channels

Unit Name (Channel Name) DCRAn	Channels per Unit	RH850/P1x 100 pins (4 ch)	RH850/P1x 144 pins (4 ch)
DCRA0	1	√	√
DCRA1	1	√	√
DCRA2	1	√	√
DCRA3	1	√	√

Table 33.3 Index

Index	Meaning
n	Throughout this section, the individual Data CRC function A units are identified by the index “n” (n = 0 to 3); for example, DCRAnCTL indicates the DCRAn control register.

33.1.2 Register Base Address

DCRAn base addresses are listed in the following table.

DCRAn register addresses are given as offsets from the base addresses in general.

Table 33.4 Register Base Address

Base Address Name	Base Address
<DCRA0_base>	FFD5 0000_H
<DCRA1_base>	FFD5 1000_H
<DCRA2_base>	FFD5 2000_H
<DCRA3_base>	FFD5 3000_H

33.1.3 Clock Supply

Clock supply by and to DCRAn is listed in the following table.

Table 33.5 Clock Supply

Unit Name	Clock for the Unit	Internal Clock Signal
DCRAn	PCLK	High-speed peripheral clock CLK_HSB

33.1.4 Reset Sources

DCRAn reset sources are listed in the following table. DCRAn is initialized by these reset sources.

Table 33.6 Reset Sources

Unit Name	Reset Source
DCRAn	Reset controller SYSRES

33.2 Overview

33.2.1 Functional Overview

The Data CRC function A can be used to verify or generate CRC protected data streams of arbitrary length and different bit widths.

- 32-bit Ethernet CRC
  $(X^{32} + X^{26} + X^{23} + X^{22} + X^{16} + X^{12} + X^{11} + X^{10} + X^{8} + X^{7} + X^{5} + X^{4} + X^{2} + X^{1} + 1)$
- 16-bit CCITT CRC
  $(X^{16} + X^{12} + X^{5} + 1)$
- 8-bit SAE J1850
  $(X^{8} + X^{4} + X^{3} + X^{2} + 1)$
- 8-bit 0x2F
  $(X^{8} + X^{5} + X^{3} + X^{2} + X^{1} + 1)$
- CRC generation to an arbitrary data block length.
- After initialization of the CRC input register every write access to the CRC data register generates a new CRC according to the chosen polynomial and the result is stored in the CRC data register.

33.2.2 Block Diagram

The following picture shows the block diagram of the Data CRC function A.

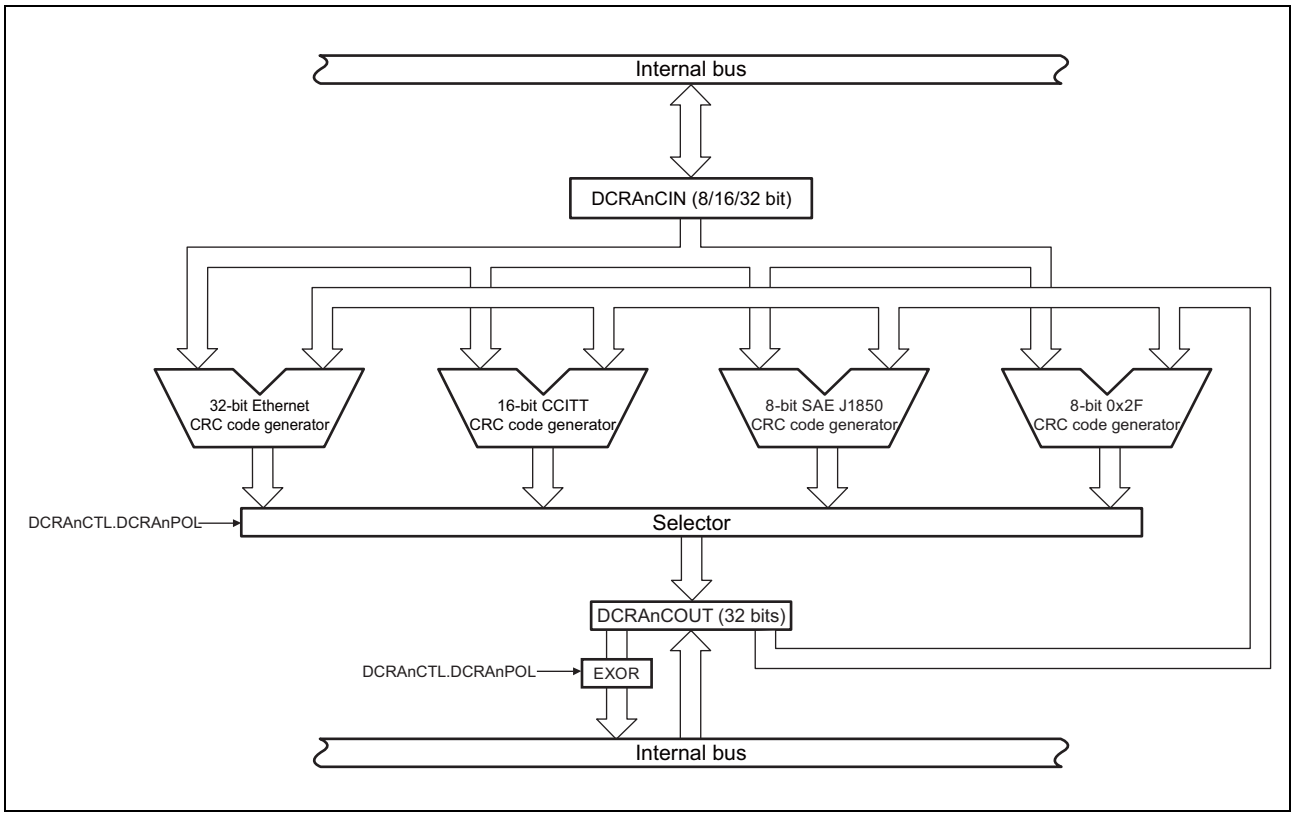

Figure 33.1 Block diagram of Data CRC Function A

33.2.3 Operation Circuit

- 32-bit ethernet

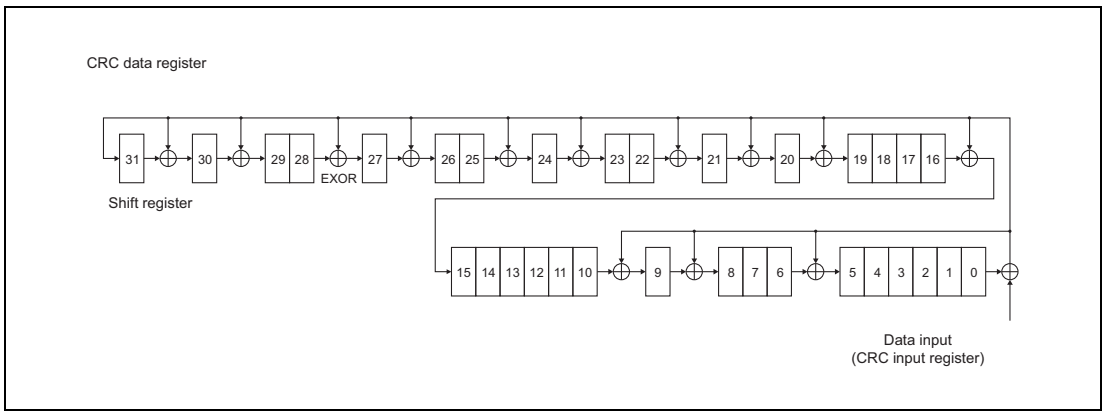

- 16-bit CCITT

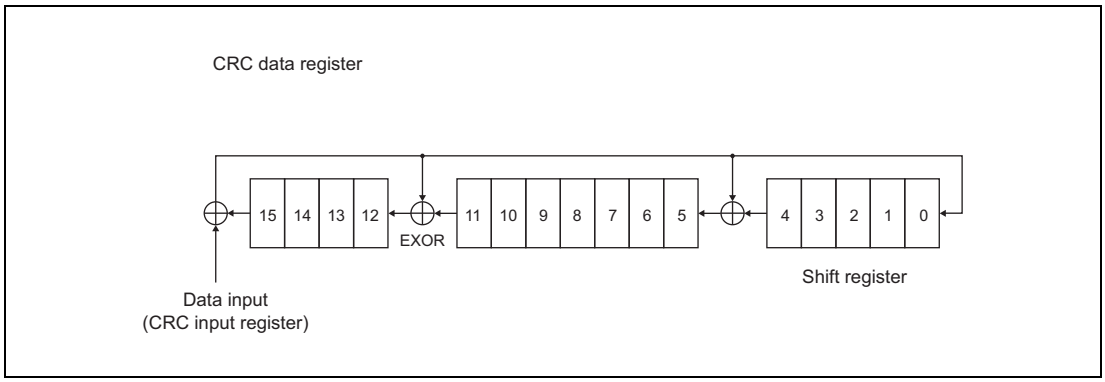

- 8-bit SAE J1850

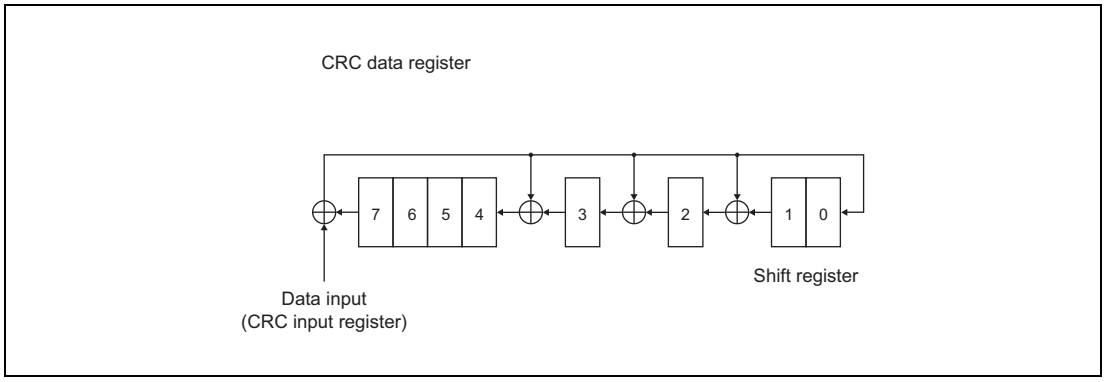

- 8-bit 0x2F

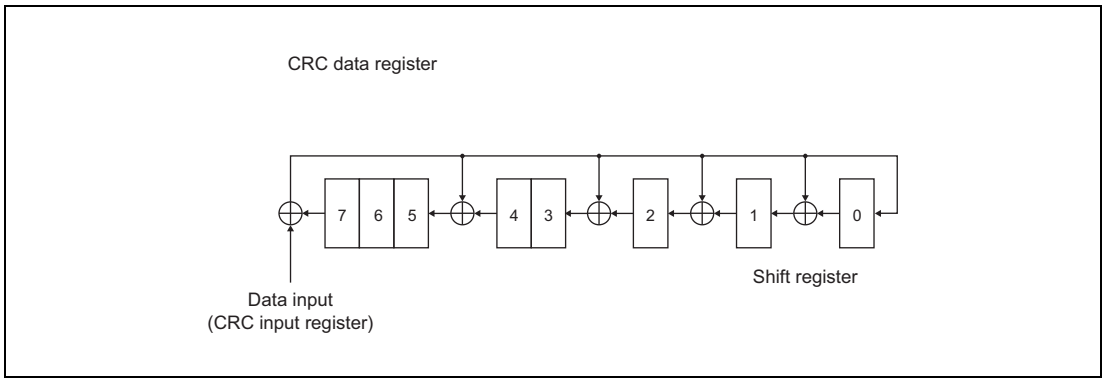
CRC data register
7
6
5
4
3
2
1
0
Shift register
Data input
(CRC input register)

33.3 Registers

33.3.1 List of Registers

DCRA registers are listed in the following table.

<DCRAn_base> is defined in **Section 33.1.2, Register Base Address**.

Table 33.7 Registers

Module	Register	Symbol	Address
DCRAn	CRC input register	DCRAnCIN	<DCRAn_base> + 00_H
DCRAn	CRC data register	DCRAnCOUT	<DCRAn_base> + 04_H
DCRAn	CRC control register	DCRAnCTL	<DCRAn_base> + 20_H

33.3.2 DCRAnCIN — CRC Input Register

This register holds the input data for the CRC calculation. The effective bit width used for CRC calculation must be set by DCRAnCTL.DCRAnISZ[1:0].

When data is written to this register, the CRC code is generated.

The CRC calculation is immediately started after the DCRAnCIN register is written. The DCRAnCOUT register must be initialized, with the initial starting value, before the first data of the data block is written to DCRAnCIN register.

Access: This register can be read/written in 32-bit units.

Address: <DCRAn_base>

Value after reset: $0000\ 0000_H$ This register is initialized by any reset.

Bit	31	30	29	28	27	26	25	24	23	22	21	20	19	18	17	16
	DCRAnCIN[31:16]															
Value after reset	0	0	0	0	0	0	0	0	0	0	0	0	0	0	0	0
R/W	R/W	R/W	R/W	R/W	R/W	R/W	R/W	R/W	R/W	R/W	R/W	R/W	R/W	R/W	R/W	R/W

Bit	15	14	13	12	11	10	9	8	7	6	5	4	3	2	1	0
	DCRAnCIN[15:0]															
Value after reset	0	0	0	0	0	0	0	0	0	0	0	0	0	0	0	0
R/W	R/W	R/W	R/W	R/W	R/W	R/W	R/W	R/W	R/W	R/W	R/W	R/W	R/W	R/W	R/W	R/W

Table 33.8 DCRAnCIN Register Contents

Bit Position	Bit Name	Function
31 to 0	DCRAnCIN [31:0]	Input Data for CRC Calculation The valid bits are: • For 32 bit effective bit width: DCRAnCIN[31:0] • For 16 bit effective bit width: DCRAnCIN[15:0] • For 8 bit effective bit width: DCRAnCIN[7:0]

33.3.3 DCRAnCOUT — CRC Data Register

This register stores the result of the CRC code generated by any of the following polynomials.

- 32-bit Ethernet
- 16-bit CCITT
- 8-bit SAE J1850
- 8-bit 0x2F

Access: This register can be read/written in 32-bit units.

Address: <DCRAn_base> + 4_H

Value after reset: 0000 0000_H

Bit	31	30	29	28	27	26	25	24	23	22	21	20	19	18	17	16
	DCRAnCOUT[31:16]															
Value after reset *1	1	1	1	1	1	1	1	1	1	1	1	1	1	1	1	1
R/W	R/W	R/W	R/W	R/W	R/W	R/W	R/W	R/W	R/W	R/W	R/W	R/W	R/W	R/W	R/W	R/W

Bit	15	14	13	12	11	10	9	8	7	6	5	4	3	2	1	0
	DCRAnCOUT[15:0]															
Value after reset *1	1	1	1	1	1	1	1	1	1	1	1	1	1	1	1	1
R/W	R/W	R/W	R/W	R/W	R/W	R/W	R/W	R/W	R/W	R/W	R/W	R/W	R/W	R/W	R/W	R/W

Note 1. The read value after reset is 0000 0000_H since the 32-bit ethernet CRC polynomial is selected as the CRC generating function after reset.

Table 33.9 DCRAnCOUT Register Contents

Bit Position	Bit Name	Function
31 to 0	DCRAnCOUT [31:0]	Result of the CRC Code Generation When the 16-bit CCITT polynomial is enabled, bits 15 to 0 show the CRC result. The values of bits 31 to 16 are undefined. When the 8-bit SAE J1850 or 0x2F polynomial is enabled, bits 7 to 0 show the CRC result. The values of bits 31 to 8 are undefined. The read value of this register is a value obtained by performing EXOR calculation for the following value: • For 32-bit ethernet polynomial: FFFF $FFFF_H$ • For 16-bit CCITT polynomial: 0000_H • For 8-bit SAE J1850 or 0x2F polynomial: 0000 $00FF_H$ For example, when DCRAnCOUT = 5555 5555_H for the 32-bit Ethernet polynomial, AAAA $AAAA_H$ is read.

CAUTION

This register must initialized by setting the initial start value before the first data of the data block is written to DCRAnCIN register.

33.3.4 DCRAnCTL — CRC Control Register

This register controls the CRC generation process.

Access: This register can be read/written in 8-bit units.

Address: <DCRAn_base> + 20_H

Value after reset: 00_H This register is initialized by any reset.

Bit	7	6	5	4	3	2	1	0
	—	—	DCRAnISZ[1:0]		—	—	DCRAnPOL[1:0]	
Value after reset	0	0	0	0	0	0	0	0
R/W	R	R	R/W	R/W	R	R	R/W	R/W

Table 33.10 DCRAnCTL Register Contents

Bit Position	Bit Name	Function
7, 6	Reserved	When read, the value after reset is read. When writing, write the value after reset.
5, 4	DCRAnISZ[1:0]	Specifies the CRC input bit width: 00: 32 bit (DCRAnCIN[31:0]) 01: 16 bit (DCRAnCIN[15:0]) 10: 8 bit (DCRAnCIN[7:0]) 11: Setting prohibited
3, 2	Reserved	When read, the value after reset is read. When writing, write the value after reset.
1, 0	DCRAnPOL[1:0]	Specifies the CRC generating function: 00: 32-bit ethernet CRC polynomial The byte order of the DCRAnCIN register is LSB (least significant byte) first. This means that if the CRC input bit width is 8 bits (DCRAnISZ[1:0] = 10_B), the input values are in bits 7 to 0 of the DCRAnCIN register and bit 0 (the LSB) is the first bit of the input data. 01: 16-bit CCITT CRC polynomial The byte order of the DCRAnCIN register is MSB (most significant byte) first, meaning input values are in bits 7 to 0 of the DCRAnCIN register and bit 7 (the MSB) is the first bit of the input data if the CRC input bit width is 8 bits (DCRAnISZ[1:0] = 10_B). 10: 8-bit SAE J1850 polynomial The byte order of the DCRAnCIN register is MSB (most significant byte) first, meaning input values are in bits 7 to 0 of the DCRAnCIN register and bit 7 (the MSB) is the first bit of the input data if the CRC input bit width is 8 bits (DCRAnISZ[1:0] = 10_B). 11: 8-bit 0x2F polynomial The byte order of the DCRAnCIN register is MSB (most significant byte) first, meaning input values are in bits 7 to 0 of the DCRAnCIN register and bit 7 (the MSB) is the first bit of the input data if the CRC input bit width is 8 bits (DCRAnISZ[1:0] = 10_B).

NOTE

If the CRC generation method (DCRAnCTL.DCRAnPOL) is changed, the DCRAnCOUT register must be initialized by setting the initial start value.

CAUTION

The CRC input bit width (DCRAnCTL.DCRAnISZ[1:0]) must be set according to the data block bit width. Changing the CRC input bit width is not allowed during processing of a data block (a data block consists of N bytes, half-words or one word). After the final CRC result is read from DCRAnCOUT register, the CRC input bit width can be changed. In that case, the DCRAnCOUT register must be initialized with the initial start value.

33.4 Operation

The Data CRC Function A generates a CRC (cyclic redundancy check) value of an arbitrary block length. The data for the CRC function is forwarded in 8-, 16-, or 32-bit units. The CRC polynomial can either be selected from 32-bit ethernet CRC or 16-bit CCITT CRC. The initial starting value must be set at the DCRAnCOUT register before the first write access to the CRC input register (DCRAnCIN) is performed.

The flow chart below shows the CRC value generating procedure.

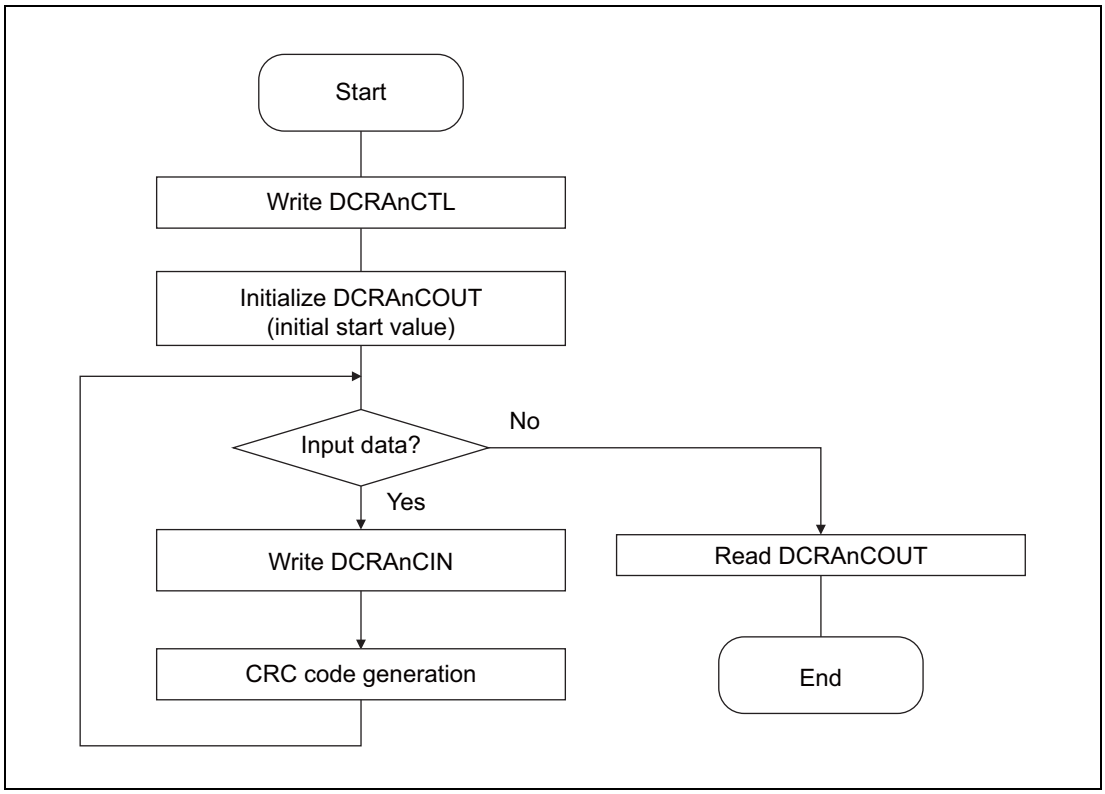

Figure 33.2 Data CRC Function A Flow Diagram

NOTES

1. Before writing the first data to DCRAnCIN, the CRC output register DCRAnCOUT must be initialized with the initial start value.
2. DCRAnCOUT must be initialized by setting the initial start value when the polynomial is changed by changing DCRAnCTL.DCRAnPOL.
3. Setting example of the initial start values of the respective polynomials
   The following is the example of setting values.

Table 33.11 Setting Example of the Initial Start Values (Reset when read)

	Initial Start Value	EXOR Value	DCRAnCOUT Read Value
8-bit SAE J1850/0x2F	XXXX $XXFF_H$	XXXX $XXFF_H$	XXXX $XX00_H$
16-bit CCITT	XXXX $FFFF_H$	XXXX 0000_H	XXXX $FFFF_H$
32-bit ethernet	FFFF $FFFF_H$	FFFF $FFFF_H$	0000 0000_H

Note: x: Undefined

Section 34 On-Chip Debugging Unit (OCD)

34.1 Debug Function

This product has an on-chip debug function. Using an on-chip debug emulator, the micro controller included in the target system debugs programs.

CAUTION

The debug function described in this section is supported by the microcontroller, but whether it can be used or not depends on the debugger. For details of the debugger, see the debugger's user's manual. For the necessary tool connection circuitry, please refer to the corresponding tool documentation.

(1) Debug Interface

This product supports the NEXUS JTAG Interface, Low Pin Debug Interface (1 pin) (hereinafter referred to as LPD (1 pin)), and Low Pin Debug Interface (4 pins) (hereinafter referred to as LPD (4 pins)) as the debug interfaces. Also this product incorporates the AUD-RAM monitor and supports the AUD-RAM monitor interfaces to monitor and tune on-chip RAM data, the peripheral registers, and the like.

For the AUD-RAM monitor, see **Section 34.5, AUD-RAM Monitor (AUDR)**.

(2) Debug Monitor Function

In debug mode, the monitor program proceeds in the debug-specific area.

Execution of the monitor program enables the following basic debug functions:

- Download of user programs
- Reading and writing of user resources including memory and registers while a user program is suspended.
- Execution of user programs starting from any addresses

(3) On-chip Break Function

Twelve break points are included in the CPU. Four of them can be designated for any accesses (access address and access data).

(4) Software Break Function

A software break point can be designated for any addresses on the user programs stored in the RAM.

(5) Forced Break Function

Execution of a user program can be forcibly suspended.

(6) Debug Interrupt Interface Function

Execution of a user program can be forcibly suspended by asserting an input to the $\overline{\text{EVTI}}$ pin from the outside.

(7) Forced Reset Function

The micro controller (this product) can be forcibly reset.

(8) Real-time RAM Monitor (RRM)

A memory can be read during execution of a program. This read access can minimize the impact on program execution because it uses the debug-specific DMA.

(9) Dynamic Memory Modify (DMM)

A memory can be written during execution of a program. This write access can minimize the impact on program execution because it uses the debug-specific DMA.

(10) Timer Function

When a 32-bit counter is used, the time period during execution of a user program can be measured on the basis of a debug-specific clock.

(11) Mask Function

A reset factor (pin reset, software reset, or ECM reset) can be masked.

(12) Event Detection Function

Events can be detected by the following: execution address, access address, access data, range (comparison in size), and sequential execution.

(13) Trigger Input Interface

This product incorporates an event trigger input interface to accept external events. It can accept an external event in response to an input from the $\overline{\text{EVTI}}$ pin.

(14) Trigger Output Interface

An event trigger output interface is included in this product to notify the external debug device of event detection and the like. Output from the $\overline{\text{EVTO}}$ pin can output a trigger of event detection to the outside.

(15) Hot Plug-in Function

Debugging can be started in normal operating mode without an input of a pin reset.

(16) Security Function

To prevent the contents of the flash memory from being read by an unauthorized person, a 128-bit ID code (OCD_ID) can be written to the microcontroller. If the code the user inputs when starting a debugger does not match the ID code, the flash memory cannot be accessed.

(17) Calibration Function

Emulation of the flash memory and tuning of ROM data can be executed by using the ERAM, the memory for emulation. For details, **Section 34.2, Calibration Function**.

(18) Tracing Function

User program execution history, data variation, and the like can be obtained. For details, see **Section 34.3, Trace Control Function**.

34.2 Calibration Function

This product includes the Emulation RAM as an emulation memory for the on-chip flash memory.

(1) Emulation RAM

This product includes 8-Kbyte emulation RAM with products with 1-MB/512-KB flash memory and 32-Kbyte emulation RAM with products with 2-MB memory.

(2) Flash Emulation Function

The emulation RAM can be mapped to any areas in the flash area. For details, see Section 36.4, Emulation RAM.

(3) Tuning Function

The ROM data can be dynamically tuned during execution of a user program via the Emulation RAM that been mapped to the flash area.

(4) Flash Cache Clear Function

The flash cache is cleared when the Emulation RAM mapping is set. This preserves coherency of the contents between the on-chip flash memory or the Emulation RAM and the flash cache memory.

34.3 Trace Control Function

This product provides several trace functions including branch PC trace of the CPU, data trace, and DMA data trace.

(1) Trace RAM

This product has 32 KB for the trace RAM.

The trace information in the trace RAM is accessible via the debug interfaces: NEXUS, LPD (1 pin), and LPD (4 pins).

(2) Software Trace

This function enables the obtaining of histories of user program execution, data variation, and the like.

The software trace information can be output via the debug interfaces, LPD (1 pin).

34.4 Peripheral Break Control

Peripheral break is a function for stopping the peripheral modules when a user program is halted (at a break point, etc.).

The on-chip modules can be classified into two by its operation at the time of peripheral break as follows:

1. Modules that are unconditionally stopped: WDTA0
2. Modules that can select abeyance or continuation: OSTM0, OSTM1, OSTM3, OSTM4, OSTM5, OSTM6, OSTM7, TAPA0, TAPA1, TAPA2, TAPA3, TPBA0, TPBA1, TSG30, TSG31, ENCA0, ENCA1, TAUJ0, TAUJ1, TAUJ2, TAUD0, TAUD1, TAUD2, CSIG0, CSIH0, CSIH1, CSIH2, CSIH3, RLIN30, RLIN31

34.5 AUD-RAM Monitor (AUDR)

34.5.1 Overview

This LSI includes the AUD (Advanced User Debugger) -RAM Monitor (AUDR) that is implemented on the system and supports debugging of user programs. The AUDR can read and write the resources mapped to memory spaces including an on-chip memory and a peripheral register during LSI operation.

CAUTION

This function is not supported in the 100-pin version.

Table 34.1 lists the outlines of the AUDR and **Figure 34.1** shows the block diagram of the AUDR.

Table 34.1 Outlines of the AUDR

Item	Outline
Transfer method	Clock-synchronous parallel interface (4 bits)
Transfer clock generation	Generates at the external host (RAM monitor tool) side.
Transfer clock frequency	Maximum 20 MHz
Access area	Physical address area on the system bus
Access data size	8, 16, 32, and 64 bits
Access address input bit width	8, 16, 24, and 32 bits The same values as those of the previous access address are used for the upper bits of access address, which are not input.
Data transfer method	• Single transfer: Single data is transferred to the access address that has been input. • Continuous transfer: Up to 16 data are continuously transferred from the access address that has been input. The access address is automatically incremented depending on data size.
I/O pin	7 pins ($\overline{\text{AUDRST}}$, AUDCK, $\overline{\text{AUDSYNC}}$, and AUDATA3 to AUDATA0)
Function	• RAM monitor function: Read and write are performed from a system bus to an accessible physical address area. This function enables reference to and modification of on-chip memory, a peripheral register, and the like. • Synchronization communication (message board) function: This flag register is used for communication of the firmware operated by the CPU with a RAM monitor tool.

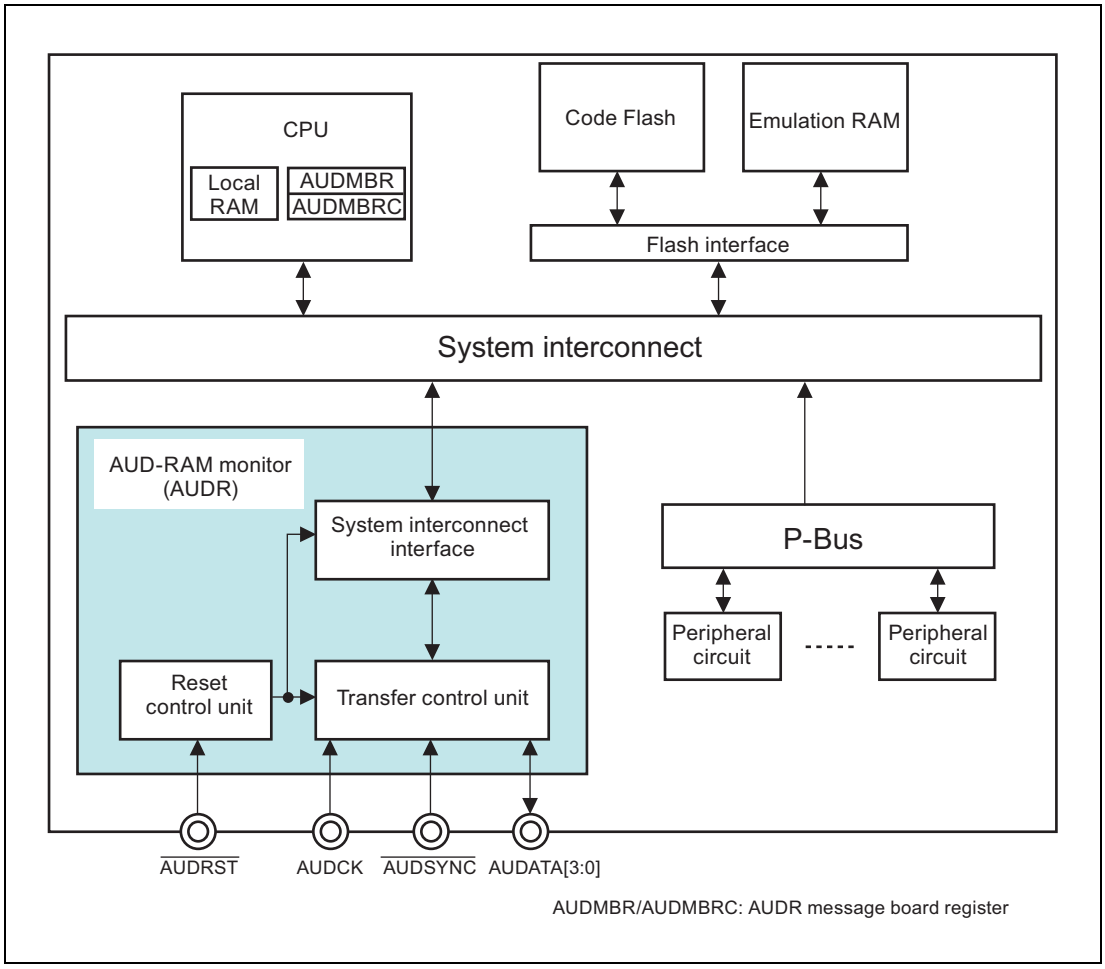

Figure 34.1 Block Diagram of the AUDR

34.5.2 I/O Pins

Table 34.2 lists the I/O pins of the AUDR.

Table 34.2 I/O Pins of AUDR

Pin Name	I/O	Description
$\overline{\text{AUDRST}}$	Input	This is the AUDR reset input pin. Input of the low level on this pin resets the AUDR. It is always pulled-down internally.
AUDCK	Input	This is the external clock input pin. The frequency of clock that can be input is less than 20 MHz. It is always pulled-up internally.
$\overline{\text{AUDSYNC}}$	Input	This is the timing control signal input pin. L: A command, an address, and write data are input and the status flag is output. H: The read-out data is output, and it causes an idle state. It is always pulled-up internally. **CAUTION** This pin should not be negated (to H) until made to enter the ready state by inputting a command or the like from the outside to the AUDATA. For details, see the protocol mentioned below.
AUDATA3 to AUDATA0	Input/Output	This is the 4-bit parallel data I/O pin. The following information is input and output by time division. • Command (input) • Address (input) • Write data (input)/Read data (output) • Status flag (output) In input mode, it is always pulled-up internally.

34.5.3 Description of Registers

Table 34.3 lists the registers related to the AUDR.

This register can be accessed only from CPU1.

Table 34.3 List of Registers

Register Name	Abbreviation	Value after reset	R/W	Address	Access Size	Reference section
AUDR message board register	AUDMBR	0000_H	R/W*1	FA00 5004_H (CPU)*3 F900 5004_H (AUDR)*3	16*4	**34.5.3.1**
	AUDMBRC	0000_H	R/W*1,*2	FA00 5008_H (CPU)*3 F900 5008_H (AUDR)*3	16*4	

Note 1. Only 1 can be written to the bits that have been set to 0. 0 cannot be written to the bits that have been set to 1.

Note 2. All bits are cleared to 0 after read.

Note 3. The addresses of the AUDMBR/AUDMBRC registers vary depending on the origin of access, the program or the AUDR tool. Although these addresses are “reserved” areas, it is possible to access these addresses for the communication with the AUDR tool.

Note 4. If an access in a data size other than 16 bits (half-word) is performed, the correct operation is not guaranteed.

34.5.3.1 AUDMBR/AUDMBRC — AUDR Message Board Register

The AUDMBR/AUDMBRC register is a 16-bit readable/writable register. It can be read and written from the program and the AUDR tool.

Use FA00 5004_H or FA00 5008_H for an access from the program. Use F900 5004_H or F900 5008_H for an access from the AUDR tool.

When the program reads out the AUDMBRC in FA00 5008_H, all bits of the AUDMBR/AUDMBRC are cleared to 0 after reading. When the program reads out the AUDMBR in FA00 5004_H, the bits of the AUDMBR/AUDMBRC are not cleared.

When the AUDR tool reads out the AUDMBR in F900 5008_H, all bits of the AUDMBR/AUDMBRC are cleared to 0 after reading. When the AUDR tool reads out the AUDMBR in F900 5004_H, the bits of the AUDMBR/AUDMBRC are not cleared.

A program and the AUDR tool can write to the AUDMBR/AUDMBRC from the above addresses. However, writing 0 to the bits that have been set to 1 is ignored. (Only setting to 1 is available).

Table 34.5 summarizes the recommended accesses to the AUDMBR/AUDMBRC.

The AUDMBR/AUDMBRC register is not initialized by AUDR reset. The AUDMBR/AUDMBRC can be read and written from the program during reset.

Bit	15	14	13	12	11	10	9	8	7	6	5	4	3	2	1	0
	AUDMBR															
Value after reset	0	0	0	0	0	0	0	0	0	0	0	0	0	0	0	0
R/W	R/W	R/W	R/W	R/W	R/W	R/W	R/W	R/W	R/W	R/W	R/W	R/W	R/W	R/W	R/W	R/W

Table 34.4 AUDMBR/AUDMBRC register contents

Bit Position	Bit Name	Function
15 to 0	AUDMBR	Communication flag between the AUDR and the CPU

Table 34.5 Recommended Access to the AUDMBR/AUDMBRC

Accessing Master	Address	R/W	Access	Remarks
CPU	FA00 5004_H (AUDMBR)	Write	Only 1 can be written. Writing 0 is ignored.	—
		Read	Reading is enabled.	Not cleared after reading.
AUDR tool	F900 5008_H (AUDMBRC)	Write	Only 1 can be written. Writing 0 is ignored.	—
		Read	Reading is enabled.	All bits are cleared to 0 after reading.

34.5.4 RAM Monitor Function

34.5.4.1 Communication Protocol

Input a command, a counter value, an address, and data to the AUDATA pin in the format shown in **Figure 34.2**. For details, see **Section 34.5.4.2, Description of Operation**.

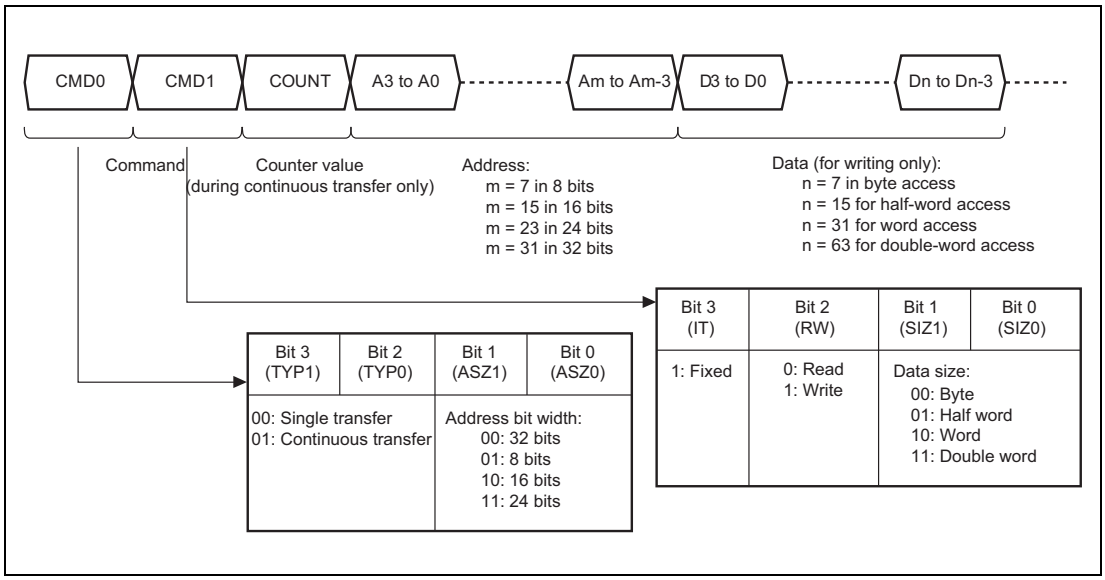

Figure 34.2 AUDATA Pin Input Format

34.5.4.2 Description of Operation

(1) Single Transfer

Single transfer is a method of transmitting single data to an address that has been input for access. **Figure 34.3** shows an example of reading operation during single transfer and **Figure 34.4** shows an example of writing operation during single transfer.

When the $\overline{\text{AUDSYNC}}$ pin is asserted and a command, an address and data (only for writing) are input to the AUDATA pin in the format shown in **Figure 34.2**, the AUDR starts a reading or writing operation for the specified address. The AUDR outputs the Not Ready flag (0000) to the AUDATA pin during this internal execution. After successful completion of the internal execution, the AUDR outputs the Ready flag (0001) to the AUDATA pin. (See **Figure 34.3** and **Figure 34.4**).

For reading, after the Ready flag is output and the $\overline{\text{AUDSYNC}}$ pin is negated, the read-out data is output from the AUDATA pin (see **Figure 34.3**).

If a command other than those shown in **Figure 34.2** is input to the CMD0 and CMD1, the AUDR disables this processing as a command error and sets the CFLG bit in the Ready flag to 1. When a bus error occurs during the internal execution, the AUDR also disables this processing and sets the BFLG bit in the Ready flag to 1 (see **Figure 34.5**).

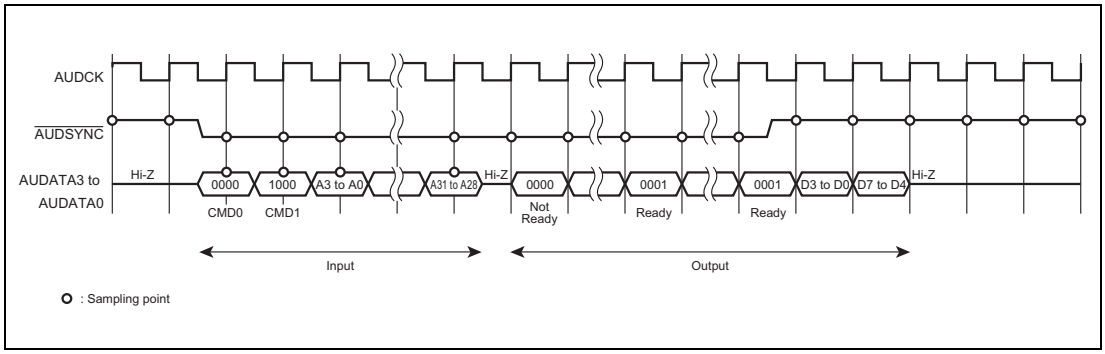

Figure 34.3 Example of Reading Operation in Single Transfer (address 32 bits; byte read)

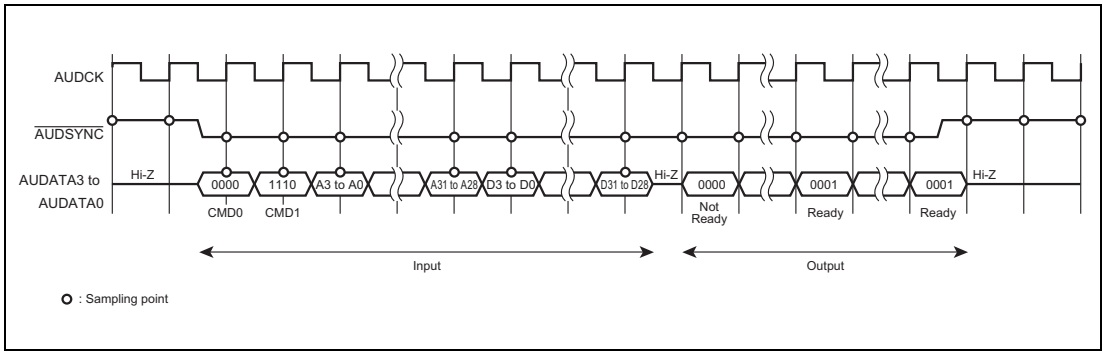

Figure 34.4 Example of Writing Operation in Single Transfer (address 32 bits; word write)

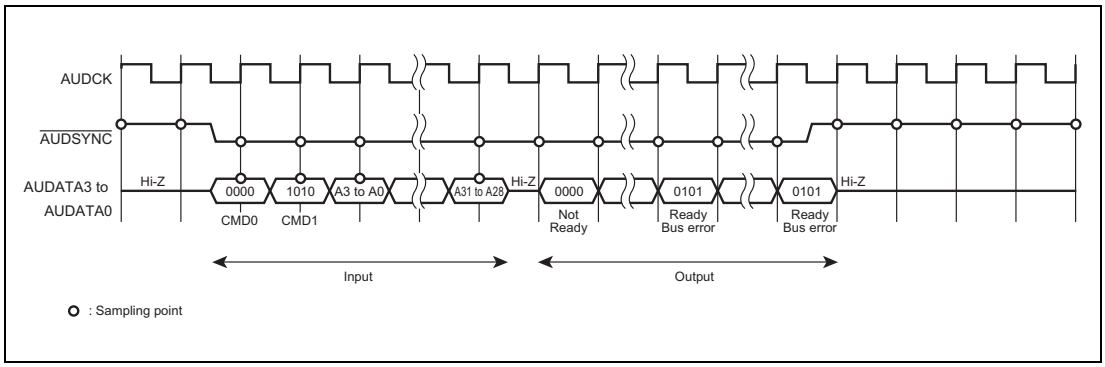

Figure 34.5 Example of Error Occurrence in Single Transfer (address 32 bits; word read)

(2) Continuous Transfer

Continuous transfer is a continuous transmitting method of up to 16 data to the address that has been input. The address to be accessed is automatically incremented depending on the data size after completion of each data transfer. **Figure 34.6** shows an example of reading operation during continuous transfer and **Figure 34.7** shows an example of writing operation during continuous transfer.

The first data transfer is equivalent to single transfer except that the COUNT (counter value) shown in **Figure 34.2** should be input. The number of data to be transferred minus 1 is input to the COUNT.

In data transfer after the second time, the CMD0, CMD1, COUNT, and addresses are skipped to input. The data transfers after the second time for reading and writing proceed as follows, respectively.

For reading, when the $\overline{\text{AUDSYNC}}$ pin is asserted after completion of the previous data transfer, the AUDR outputs the Not Ready flag (0000) to the AUDATA pin during this internal execution. After successful completion of the internal execution, the AUDR outputs the Ready flag (0001) to the AUDATA pin. The $\overline{\text{AUDSYNC}}$ pin is subsequently negated, and the read-out data is output from the AUDATA pin. This operation is repeated until the number of data specified in the COUNT is read (see **Figure 34.6**).

For writing, when the $\overline{\text{AUDSYNC}}$ pin is asserted after completion of the previous data transfer, the AUDR inputs the data to be written from the AUDATA pin. After inputting, the AUDR starts the internal execution. The AUDR outputs the Not Ready flag (0000) to the AUDATA pin during this operation. After successful completion of the internal execution, the AUDR outputs the Ready flag (0001) to the AUDATA pin. Then this operation is repeated until all data of the number specified in the COUNT is finished writing (see **Figure 34.7**).

If a bus error occurs during the internal execution, the AUDR suspends data transfer operation and sets the BFLG bit in the Ready flag to 1 (see **Figure 34.8**).

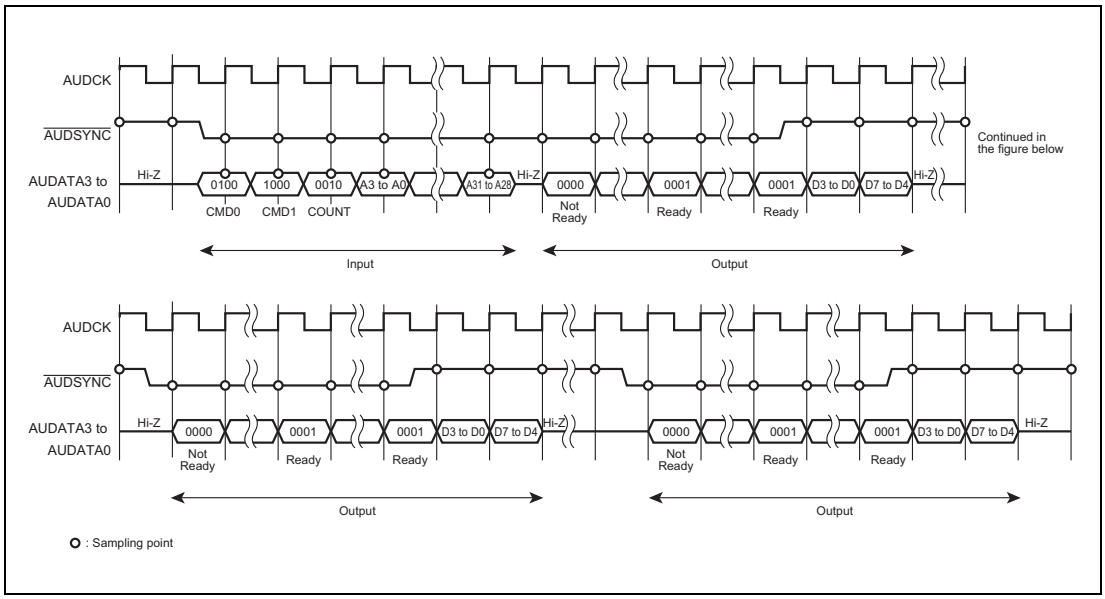

Figure 34.6 Example of Reading Operation in Continuous Transfer (address 32 bits; byte read × three units of data)

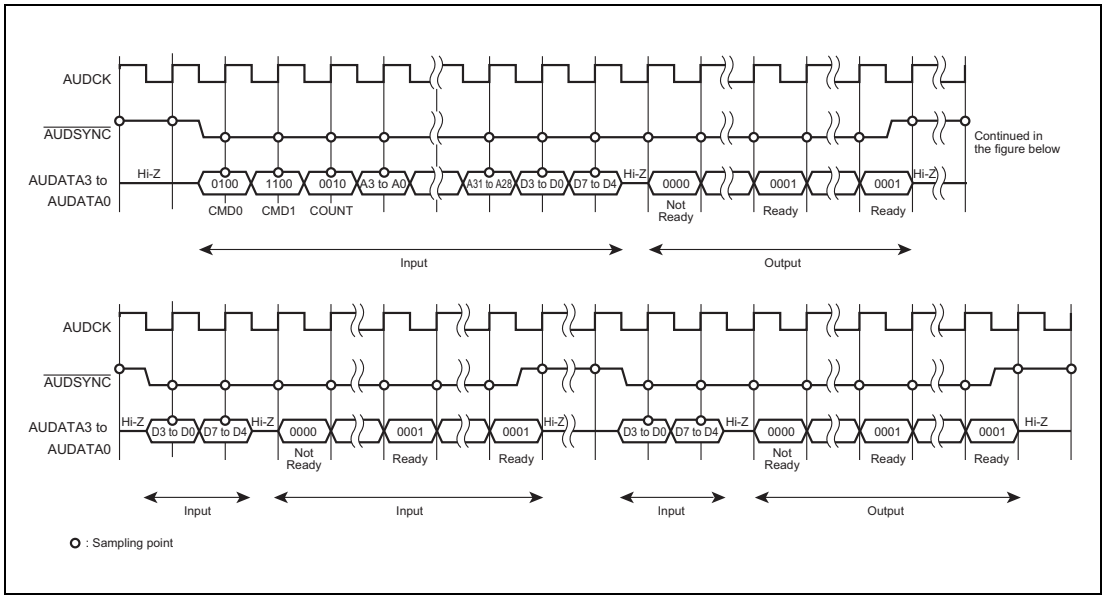

Figure 34.7 Example of Writing Operation in Continuous Transfer (address 32 bits; byte write × three units of data)

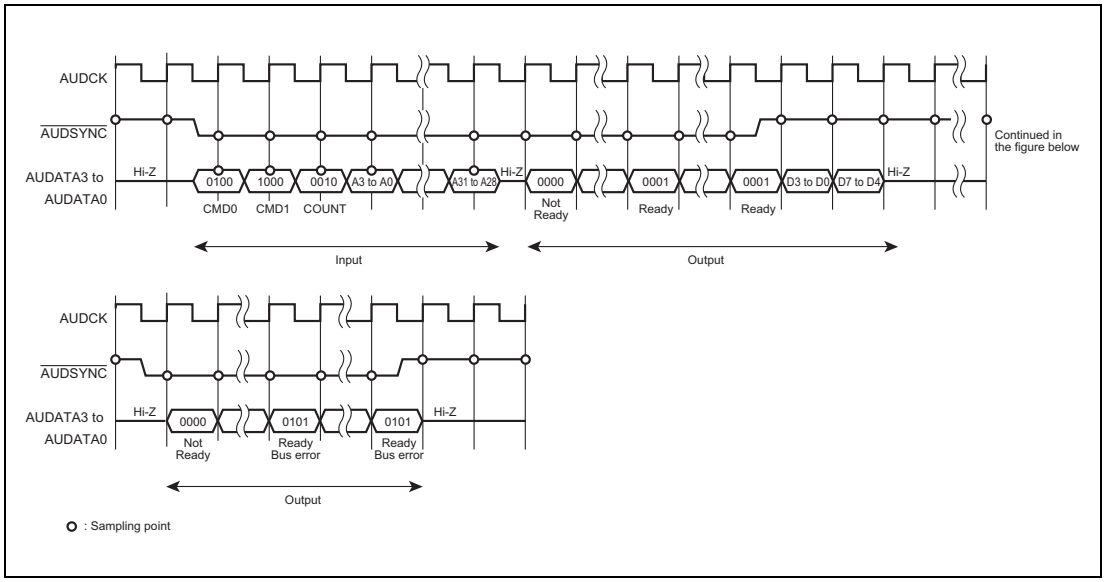

Figure 34.8 Example of Error Occurrence in Continuous Transfer (address 32 bits; byte read × three units of data)

(3) Command Error Conditions

Table 34.6 Command (CMD0) Error Conditions

Bit 3 (TYP1)	Bit 2 (TYP0)	Bit 1 (ASZ1)	Bit 0 (ASZ0)	Description
0	0	0	0	Single transfer Address bit width: 32 bits
0	0	0	1	Single transfer Address bit width: 8 bits
0	0	1	0	Single transfer Address bit width: 16 bits
0	0	1	1	Single transfer Address bit width: 24 bits
0	1	0	0	Continuous transfer Address bit width: 32 bits
0	1	0	1	Continuous transfer Address bit width: 8 bits
0	1	1	0	Continuous transfer Address bit width: 16 bits
0	1	1	1	Continuous transfer Address bit width: 24 bits
1	×	×	×	Command error

Table 34.7 Command (CMD1) Error Conditions

Bit 3 (IT)	Bit 2 (RW)	Bit 1 (SIZ1)	Bit 0 (SIZ0)	Description
0	×	×	×	Command error
1	0	0	0	Read: Byte
1	0	0	1	Read: Half word
1	0	1	0	Read: Word
1	0	1	1	Read: Double word
1	1	0	0	Write: Byte
1	1	0	1	Write: Half word
1	1	1	0	Write: Word
1	1	1	1	Write: Double word

(4) Bus Error Conditions

- Half-word access is made to the address of 4n+1 or 4n+3.
- Word access is made to the address of 4n+1, 4n+2, or 4n+3.
- Double-word access is made to the address of 8n+1, 8n+2, 8n+3, 8n+4, 8n+5, 8n+6, or 8n+7.
- An error response is received from the system bus.

(5) AUDATA Pin Input Format

Table 34.8 Input Format Bit Position

Input Order	Format Name	Bit Position				√: Needed; —: Not needed			
		AUDATA3	AUDATA2	AUDATA1	AUDATA0				
Earlier	CMD0	TYP1	TYP0	ASZ1	ASZ0	√			
	CMD1	IT	RW	SIZ1	SIZ0	√			
	COUNT	C3	C2	C1	C0	—: Single transfer; √: Continuous transfer			
	Address					8 bits	16 bits	24 bits	32 bits
		A3	A2	A1	A0	√	√	√	√
		A7	A6	A5	A4	√	√	√	√
		A11	A10	A9	A8	—	√	√	√
		A15	A14	A13	A12	—	√	√	√
		A19	A18	A17	A16	—	—	√	√
		A23	A22	A21	A20	—	—	√	√
		A27	A26	A25	A24	—	—	—	√
		A31	A30	A29	A28	—	—	—	√
	Data (for writing only)					Byte write	Half-word write	Word write	Double-word write
		D3	D2	D1	D0	√	√	√	√
		D7	D6	D5	D4	√	√	√	√
		D11	D10	D9	D8	—	√	√	√
		D15	D14	D13	D12	—	√	√	√
		D19	D18	D17	D16	—	—	√	√
		D23	D22	D21	D20	—	—	√	√
		D27	D26	D25	D24	—	—	√	√
		D31	D30	D29	D28	—	—	√	√
		D35	D34	D33	D32	—	—	—	√
		D39	D38	D37	D36	—	—	—	√
		D43	D42	D41	D40	—	—	—	√
		D47	D46	D45	D44	—	—	—	√
		D51	D50	D49	D48	—	—	—	√
		D55	D54	D53	D52	—	—	—	√
		D59	D58	D57	D56	—	—	—	√
Later		D63	D62	D61	D60	—	—	—	√

Table 34.9 CMD0 Format

Bit Name	Function	Description
TYP[1:0]	Type of transfer	00: Single transfer 01: Continuous transfer
ASZ[1:0]	Specify an address bit width	This bit specifies the bit width of an address input from the AUDATA pin. When 8-, 16-, or 24-bits are specified, the same values as the previous access address are used for the upper bits that are not input from the AUDATA pin. Input a 32-bit address for the first access right after reset release or occurrence of a command or a bus error. 00: 32 bits 01: 8 bits 10: 16 bits 11: 24 bits

Note 1. Settings other than those mentioned above are handled as a command error.

Table 34.10 CMD1 Format

Bit Name	Function	Description
IT	Specify access space	Set to 1.
RW	Specify read or write	0: Read 1: Write
SIZ[1:0]	Specify data size	This bit specifies the size of data to be accessed. 00: Byte (8 bits) 01: Half word (16 bits) 10: Word (32 bits) 11: Double word (64 bits)

Note 1. Settings other than those mentioned above are handled as a command error.

Table 34.11 COUNT Format

Bit Name	Function	Description
C3 to C0	Specify the number of data to be transferred	This bit specifies the number of data to be transferred in continuous transfer. 0000: 1 data 0001: 2 data 0010: 3 data 0011: 4 data 0100: 5 data 0101: 6 data 0110: 7 data 0111: 8 data 1000: 9 data 1001: 10 data 1010: 11 data 1011: 12 data 1100: 13 data 1101: 14 data 1110: 15 data 1111: 16 data

Table 34.12 Address Format

Bit Name	Function	Description
A31 to A0	Specify addresses	This bit specifies an address to be accessed. The necessary number of bits varies according to the setting of the ASZ[1:0] bit in the CMD0 (for details, see **Table 34.8**).

Table 34.13 Write Data Format

Bit Name	Function	Description
D63 to D0	Specify write data	This bit specifies write data. The necessary number of bits varies according to the setting of the SIZ[1:0] bit in the CMD1 (for details, see **Table 34.8**).

(6) AUDATA Pin Output Format

Table 34.14 Ready Flag Format

Bit Position	Bit Name	Function	Description
AUDATA3	0	—	—
AUDATA2	BFLG	This bit indicates occurrence of a bus error.	0: Successful 1: A bus error occurs.
AUDATA1	CFLG	This bit indicates occurrence of a command error.	0: Successful 1: A command error occurs.
AUDATA0	RFLG	This bit indicates completion of AUDR operation.	0: Not Ready 1: Ready

Table 34.15 Bit Allocation of Read Data

Output Order	Bit Position				√: Needed; —: Not needed			
	AUDATA3	AUDATA2	AUDATA1	AUDATA0	Byte read	Half-word read	Word read	Double-word read
Earlier	D3	D2	D1	D0	√	√	√	√
	D7	D6	D5	D4	√	√	√	√
	D11	D10	D9	D8	—	√	√	√
	D15	D14	D13	D12	—	√	√	√
	D19	D18	D17	D16	—	—	√	√
	D23	D22	D21	D20	—	—	√	√
	D27	D26	D25	D24	—	—	√	√
	D31	D30	D29	D28	—	—	√	√
	D35	D34	D33	D32	—	—	—	√
	D39	D38	D37	D36	—	—	—	√
	D43	D42	D41	D40	—	—	—	√
	D47	D46	D45	D44	—	—	—	√
	D51	D50	D49	D48	—	—	—	√
	D55	D54	D53	D52	—	—	—	√
	D59	D58	D57	D56	—	—	—	√
Later	D63	D62	D61	D60	—	—	—	√

Table 34.16 Read Data Format

Bit Name	Function	Description
D63 to D0	Output read data	The necessary number of bits varies according to the setting of the SIZ[1:0] bit in the CMD1 (for details, see **Table 34.15**).

34.5.4.3 Usage Noted for the RAM Monitor Function

Do not negate the $\overline{\text{AUDSYNC}}$ pin until a command is input to the AUDATA pin and the Ready flag is returned.

34.5.4.4 Enabling and Disabling the RAM Monitor Function

The AUDR is enabled or disabled by option bytes (stored in the flash memory and set by reset transfer).

AUDREN: AUDR Enable Bit

For setting of option bytes, see **Section 35, Flash Memory**.

NOTE

In serial programming mode, the AUDR is disabled regardless of this setting.

34.6 Usage Notes for On-chip Debugging

(1) Caution of Devices Used for Debugging
Do not mount a device used for debugging on mass-produced products. The number of times data can be written to the flash memory cannot be guaranteed because the memory has already been rewritten.

(2) When a debugger is used, before preparation for communications between the OCD emulator and microcomputer, the program written in the microcomputer is executed from the reset vector.

Section 35 Flash Memory

This section describes the flash memory mounted on RH850/P1x.

The first part in this section describes the characteristics of the mounted flash memory and the characteristics specific to RH850/P1x, such as the memory map, flash memory programming, and ECC.

35.1 Features

- Code flash memory capacity: Up to 2 Mbytes of user area and up to an additional 32 Kbytes of extended user area
- Data flash memory capacity: Up to 64 Kbytes for data area
- Methods of programming
  - Programming by communicating with the dedicated flash memory programmer via the serial interface (serial programming)
  - Flash memory programming by a user program (self-programming)
- Support for security functions to protect against illicit tampering with or reading out of data in flash memory
- Support for protection functions to protect against erroneous overwriting of the flash memory
- Support for the detection and correction of errors in the flash memory
- Support for BGOs (background operations)
  - The program on the code flash memory can be executed while the data flash memory is being programmed or erased.
- The initial settings of RH850/P1x can be configured in the extended area (option bytes) of flash memory
- Unit of erasure
  Code flash: 1 block (8 or 32 Kbytes)
  Data flash: 1 block (64 bytes)
- Unit of programming
  Code flash: 256 bytes
  Data flash: 4 bytes
- ECC
  - ECC is implemented on the code flash memory and the data flash memory. For details, see **Section 31, Functional Safety**.

35.2 Structure of Memory

The user area of the code flash memory of RH850/P1x is divided into 8-Kbyte or 32-Kbyte blocks, which serve as the units of erasure. However, the ECC test area cannot be programmed or erased.

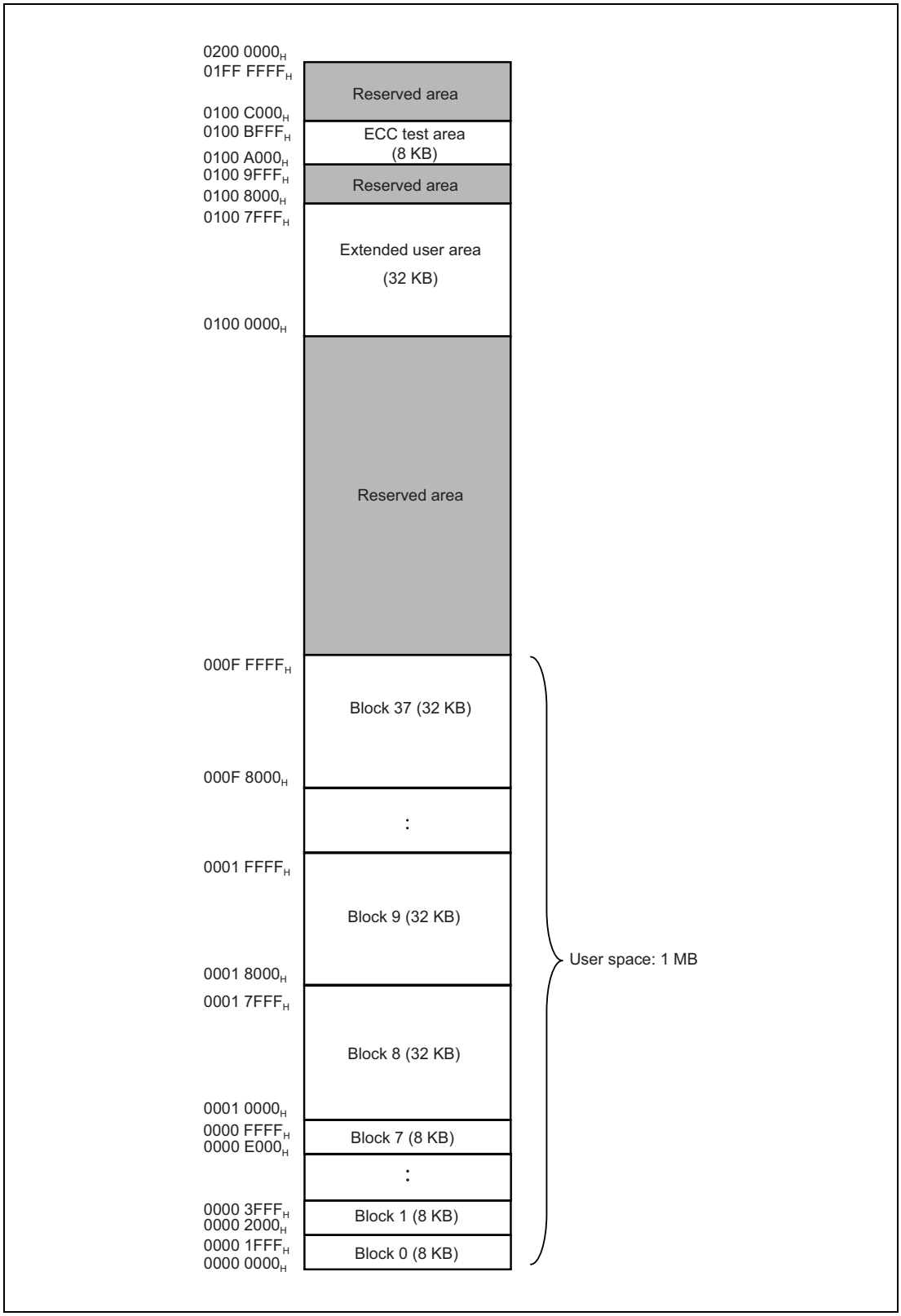

Figure 35.1 Code Flash Memory Map (8 Kbytes × 8 + 32 Kbytes × 30 configuration)

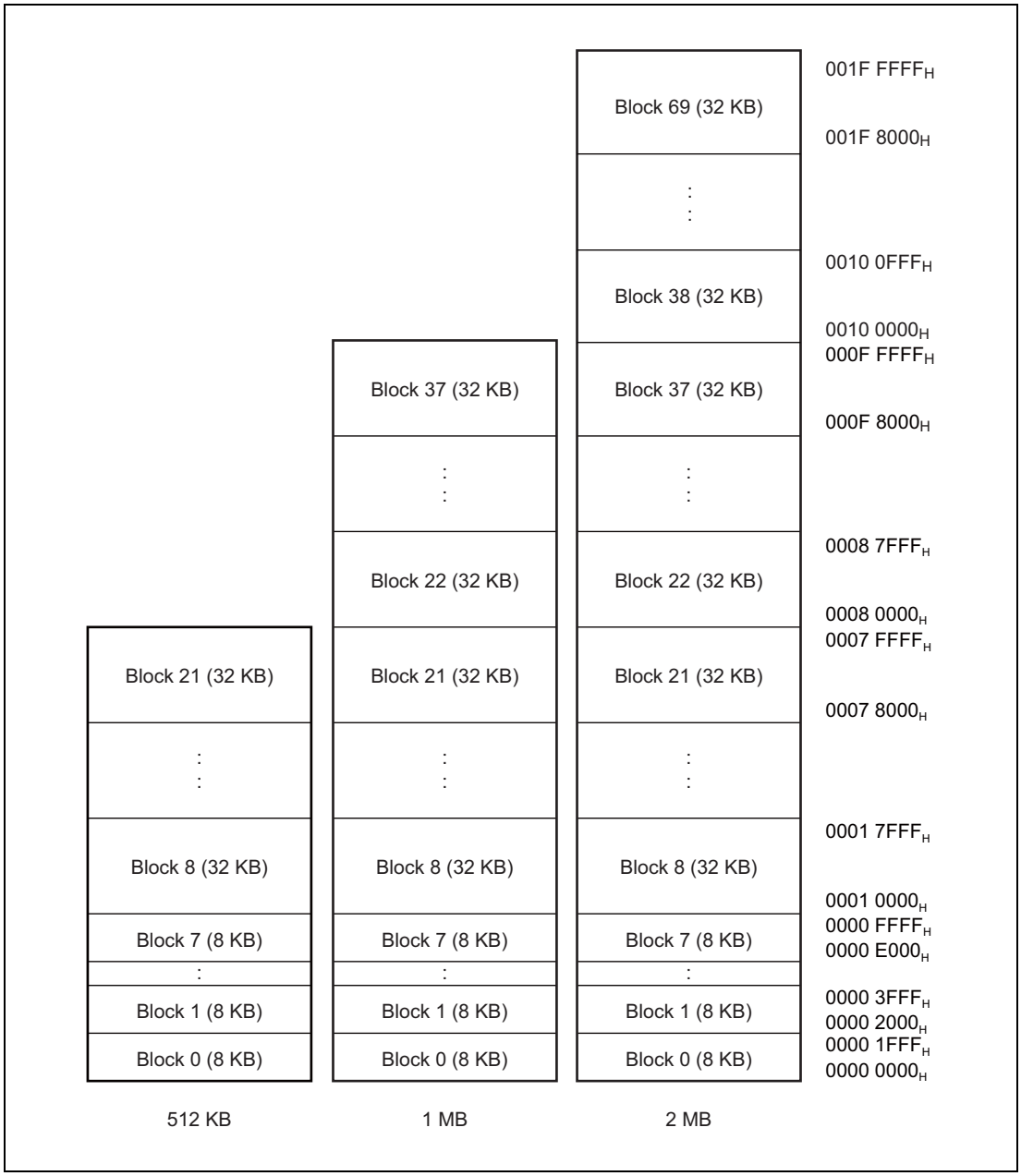

Figure 35.2 Relation between Memory Capacity and Blocks of the User Space

The data area of the data flash memory of RH850/P1x is divided into 64-byte blocks, which serve as the units of erasure.

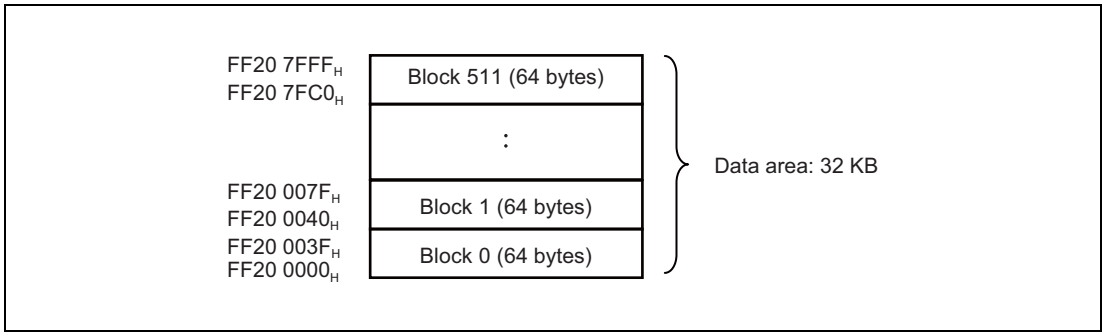

Figure 35.3 Data Flash Memory Map (64 bytes × 512 configuration)

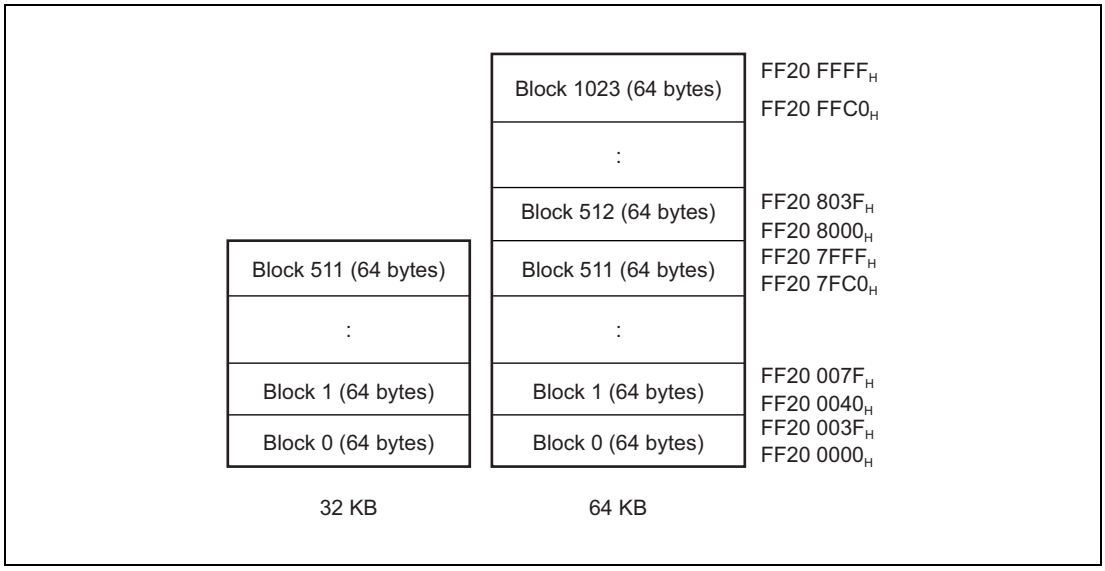

Figure 35.4 Relation between Memory Capacity and Blocks of the Data Space

35.3 Operating Modes Associated with Flash Memory

Figure 35.5 is a diagram of the mode transitions associated with the flash memory. For the procedures for setting the modes, refer to **Section 5, Operating Modes**.

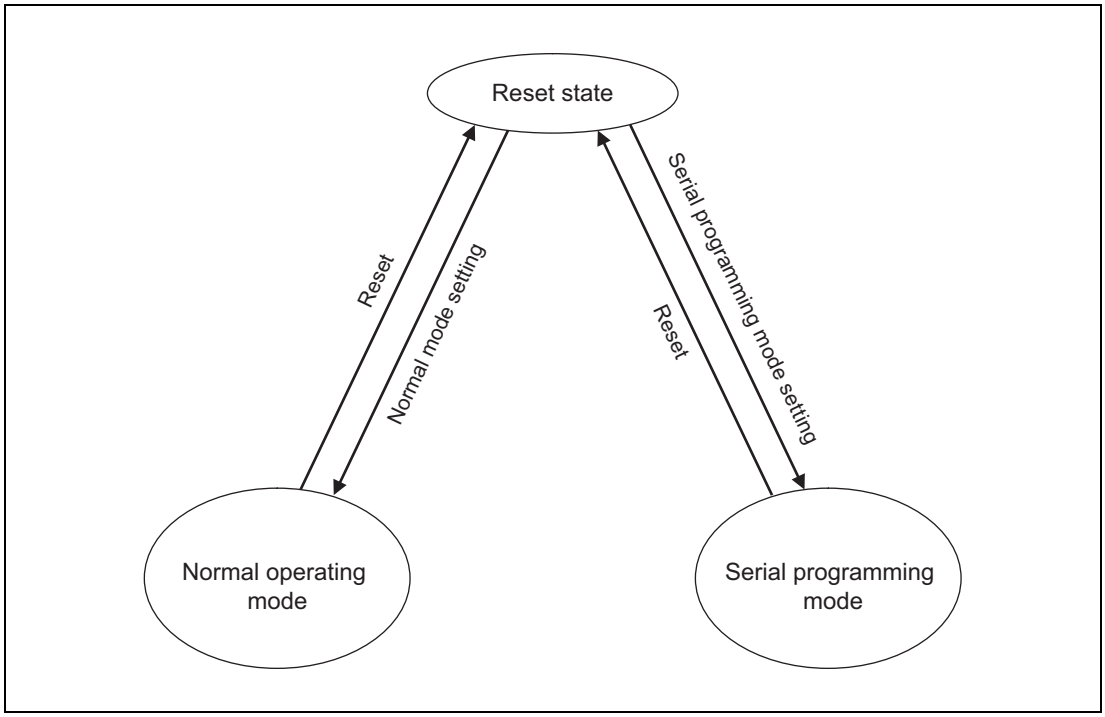

Figure 35.5 Mode Transition Associated with Flash Memory

The flash memory areas which are programmable and erasable and the boot program after a reset depend on the selected mode. The differences between modes are indicated in **Table 35.1**.

Table 35.1 Differences between Modes

Item	Normal Operating Mode	Serial Programming Mode
Programmable and erasable area	• User area • Extended user area • Data area	• User area • Extended user area • Data area
Boot program at a reset	Program in user area or extended user area	Firmware program for serial programming

35.4 Functional Overview

On-chip flash memory of RH850/P1x can be programmed regardless of before and after the mounting to the target system with the programming function that employs the dedicated flash memory programmer (serial programming).

In addition, a security function that prohibits the programming of a user program written in on-chip flash memory is supported to address the protection against falsification of programs by outsiders.

The programming function using a user program (self-programming) is the method suitable for applications where modifying the program after the production or shipment of the target system is expected. A protection function for secure programming to flash memory area is also supported. Furthermore, programming can be conducted under various conditions, such as in parallel with communicating with outside, by utilizing the support for interrupt processing during self-programming.

Table 35.2 gives an overview of the methods of programming and the corresponding operating modes.

Table 35.2 Programming Methods

Programming Method	Functional Overview	Operating Mode
Serial programming	A dedicated flash-memory programmer is capable of on-board programming the flash memory after the device is mounted on the target system.	Serial programming mode
	A dedicated flash memory programmer and dedicated programming adapter board allow off-board programming of the flash memory, i.e. programming of the device before it is mounted on the target system.	
Self-programming	The user program that is written to code flash memory in advance of serial programming executing is capable of programming the flash memory. The background operation capability makes it possible to fetch instructions or otherwise read data from code flash memory while the data flash memory is being programmed. For this reason, it is possible to program the data flash memory by executing a program written to the code flash memory. Instructions in the code flash memory cannot be fetched and data cannot be read while the code flash memory is being programmed by self-programming. In such cases, a program for programming from the local RAM must be transferred in advance and executed.	Normal operating mode

Table 35.3 lists the functions of the on-chip flash memory. Serial programmer commands realize serial programming, while reading of the on-chip flash memory by the user program realizes self-programming.

Table 35.3 Basic Functions at a Glance

Function	Description in Overview	Level of Support (√: Supported, △: Conditionally Supported, ×: Not Supported)	
		Serial Programming	Self-programming
Blank checking	This is used to check a specified block to ensure that writing to it has not already proceeded. Results of reading from code flash memory and data flash memory to which nothing has been written after erasure are not guaranteed, so use blank checking to confirm that writing to memory has not proceeded after erasure.	√	√
Block erasure	This is for erasing the contents of a specified block of memory.	√	√
Programming	This is for writing to a specified address.	√	√
Verification and checksum	Data that are read out from flash memory are compared with data transferred from the flash memory programmer.	√	× (reading of data by the user program is possible)
Reading	Data that have been written to the flash memory are read out.	√	√
Setting for OTP (one-time programming)	A specified block of code flash memory is set for OTP (OTP can only be set, that is, it is not possible to release a block's OTP setting).	√	√
Setting an ID	An ID setting is made for use in controlling the connection of a serial programmer for serial programming, and programming of the code flash memory by self-programming.	√	√
Security settings	Security settings are for use in serial programming.	√	△ (only when setting is prohibited after being permitted)
Protection settings	Protection settings specify the lock bits for all blocks of code flash memory and the reset vector value for the function of variable reset vector.	△ (reset vector value for the function of variable reset vector is not supported)	√
Setting of option bytes	Option bytes are set to change them from the initial values for the RH850/P1x.	√	√
Clearing the configuration	ID setting, security settings, protection settings, and option byte settings are initialized.	√	×

For details on serial programming, see the user's manual of each flash writer.

For details on self-programming, see the user's manuals for the flash memory hardware interface.

The OTP setting and authentication of the ID code are security functions for use with serial programming and self-programming.

In serial programming, authentication of the ID code, prohibiting connection of a serial programmer, and prohibition of commands (for block erasure, programming, and reading) are available for use as security functions.

Table 35.4 Summary of Security Functions

Function	Description
OTP	OTP can be individually set for each block of the user area and the extended user area of code flash memory. When the OTP setting is made for an area, programming by serial programming and by self-programming is prohibited. Once set, the OTP setting cannot be released. Furthermore, since execution of the configuration clearing command is prohibited for any area for which OTP has been set, changing a security setting from "prohibited" to "permitted" is not possible.
ID authentication	The result of ID authentication can be used to control the connection of a dedicated flash memory programmer for serial programming. The result of ID authentication can also be used to control enabling of self-programming.
Prohibition of connection of a serial programmer	The connection of a serial programmer for serial programming is prohibited. Since execution of the configuration clearing command is also prohibited when the connection of a dedicated flash memory programmer is prohibited, changing a security setting from "prohibited" to "permitted" is not possible.
Prohibition of block erasure commands	Block erasure commands at the time of serial programming are prohibited. Since execution of the configuration clearing command is also prohibited when block erasure commands are prohibited, changing a security setting from "prohibited" to "permitted" is not possible.
Prohibition of programming commands	Block erasure commands and programming commands at the time of serial programming are prohibited. Only through execution of the configuration clearing command can the prohibition be lifted.
Prohibition of read commands	Read commands at the time of serial programming are prohibited. Only through execution of the configuration clearing command can the prohibition be lifted.

Table 35.5 Available Operations and Security Settings

Function	All Security Settings and Erasure, Programming, and Read Operations (√: Executable, ×: Not Executable, —: Not Supported)		Point for Caution Regarding the Security Setting	
	Serial programming	Self-programming	Serial programming	Self-programming
OTP	• Areas for which OTP is set - Block erasure commands: × - Programming commands: × - Read commands: √ • Areas for which OTP is not set - Block erasure commands: √ - Programming commands: √ - Read commands: √	• Areas for which OTP is set - Block erasure: × - Programming: × - Reading: √ • Areas for which OTP is not set - Block erasure: √ - Programming: √ - Reading: √	• The OTP setting cannot be released. • Execution of the configuration clearing command is not possible.	The OTP setting cannot be released.
ID authentication	• When the ID codes do not match - Block erasure commands: × - Programming commands: × - Read commands: × • When the ID codes match - Block erasure commands: √ - Programming commands: √ - Read commands: √	• When the ID codes do not match - Code flash memory - Block erasure: × - Programming: × - Reading: √ - Data flash memory - Block erasure: √ - Programming: √ - Reading: √ • When the ID codes match - Block erasure: √ - Programming: √ - Reading: √	• The configuration clearing command can initialize the setting for prohibition. • The setting for prohibition of block erasure commands is not available. • The setting for prohibition of programming commands is not available. • The setting for prohibition of read commands is not available.	ID authentication is always in effect.
Prohibition of the connection of a serial programmer	• Block erasure commands: × • Programming commands: × • Read commands: ×	• Block erasure: √ • Programming: √ • Reading: √	Since execution of the configuration clearing command is not supported, initialization of the setting for prohibition is not possible.	Initialization of the settings prohibited is impossible because the configuration clearing command is not supported.
Prohibition of block erasure commands	• Block erasure commands: × • Programming commands: √ • Read commands: √	• Block erasure: √ • Programming: √ • Reading: √	• Since execution of the configuration clearing command is prohibited, initialization of the setting for prohibition is not possible. • The setting for prohibition of serial programmer connection is not available. • The setting for ID authentication to be effective for serial programming is not available.	Initialization of the settings prohibited is impossible because the configuration clearing command is not supported.
Prohibition of programming commands	• Block erasure commands: × • Programming commands: × • Read commands: √	• Block erasure: √ • Programming: √ • Reading: √	• Executing the configuration clearing command only can initialize the settings prohibited. • The setting for ID authentication to be effective for serial programming is not available.	Initialization of the settings prohibited is impossible because the configuration clearing command is not supported.
Prohibition of read commands	• Block erasure commands: √ • Programming commands: √ • Read commands: ×	• Block erasure: √ • Programming: √ • Reading: √		

Table 35.6 Summary of Protection Functions

Function	Description
Block protection	Block protection can be individually made to enable or disable programming and erasure of each block of the user area and the extended user area of code flash memory. Programming and erasure by self-programming of an area for which the lock bit is set and the lock bit function is enabled are prohibited. Programming or erasure can proceed again when the lock bit function is disabled after having been enabled. When a block of code flash memory is erased, the lock bit for that block is also erased.
Hardware protection	The level on the FLMD0 pin can be set to prohibit programming and erasure of the code flash memory. - FLMD0 = 0: Programming prohibited - FLMD0 = 1: Programming permitted
Variable reset vector	The protection settings include control of the reset vector. As shown in **Figure 35.6**, after programming of a new boot program while leaving the existing boot program in place, changing the reset vector is a safe way to change to the area holding the new boot program. The reset vector can specify a location in the user or extended user areas.

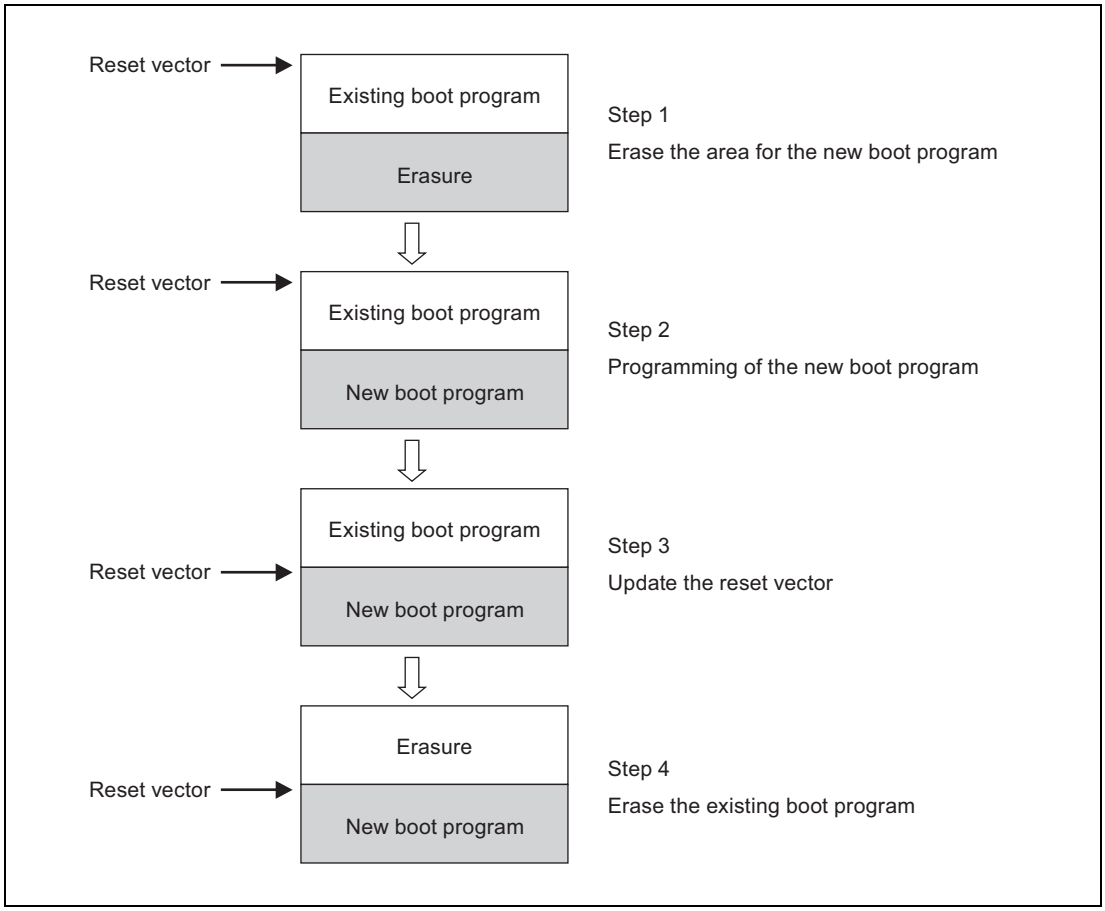

Figure 35.6 Utilizing the variable reset vector function to update the boot program

NOTE

Issuing a reset after step 4 updates the reset vector with modified RBASE.

35.5 Serial Programming

A dedicated flash-memory programmer can be used to program the flash memory in serial programming mode.

Serial programming

The microcontroller is mounted on the system board at the time of serial programming. Providing a connector to the board enables programming of the target microcontroller by the flash memory programmer to proceed.

35.5.1 Environments for Programming

The recommended environments for programming the flash memory of the microcontroller with data are described below.

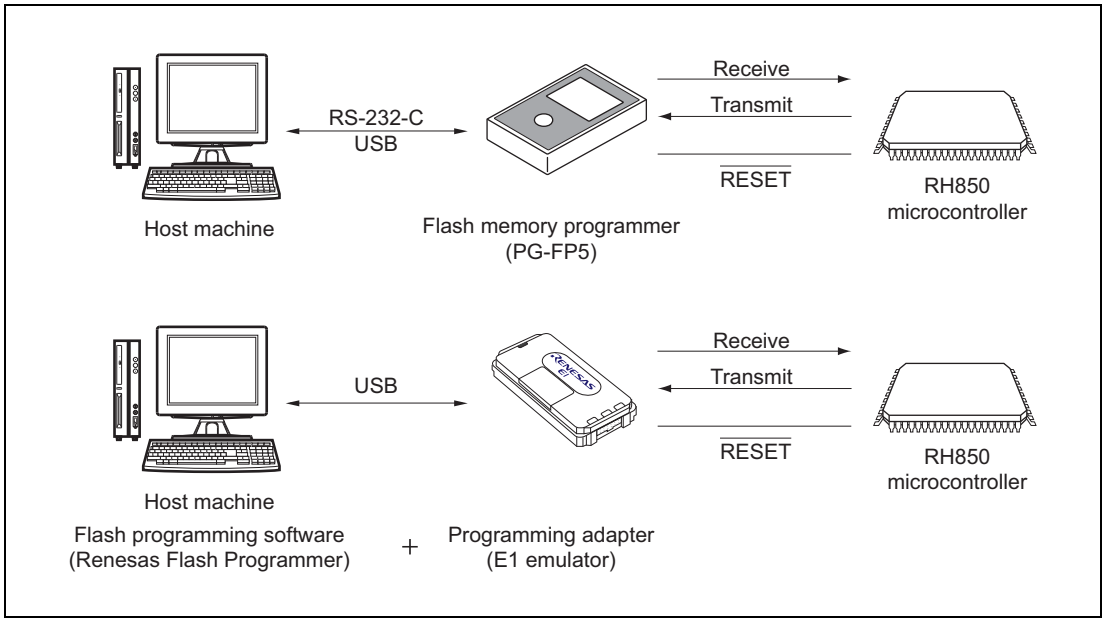

Figure 35.7 Environments for Programming Flash Memory

By using the PG-FP5 flash memory programmer or the combination of the Renesas Flash Programmer (software for writing to flash memory) running on the host machine and the E1 emulator as an programming adapter, the user is easily able to erase, program, and verify the contents of the on-chip memory of flash-memory-equipped microcontrollers from Renesas Electronics.

The PG-FP5 flash memory programmer handles programming from a host machine or programming in stand-alone mode while the Renesas Flash Programmer only handles programming from a host machine.

NOTE

See the *PG-FP5 Flash Memory Programmer User's Manual* for the details of PG-FP5, and *Renesas Flash Programmer Flash Programming Software User's Manual* for the details of Renesas Flash Programmer flash programming software.

35.6 Communications Mode

35.6.1 One-wire UART as an Asynchronous Flash Programming Interface

To use a one-wire UART as a single-wire asynchronous serial programming interface, connect the following pins and the flash memory programmer.

- FLSCI3RXD (FPDR), FLSCI3TXD (FPDT): Receive data input/transmit data output

35.6.2 Two-wire UART as an Asynchronous Flash Programming Interface

To use a two-wire UART as a double-wire asynchronous serial programming interface, connect the following pins and the flash memory programmer.

- FLSCI3RXD (FPDR): Receive data input
- FLSCI3TXD (FPDT): Transmit data output

35.6.3 CSI as a Synchronous Flash Programming Interface

To use a CSI as a synchronous serial programming interface, connect the following pins and the flash memory programmer.

- FLSCI3RXD (FPDR): Receive data input
- FLSCI3TXD (FPDT): Transmit data output
- FLSCI3SCKI (FPCK): Serial clock input

The flash memory programmer outputs the serial data clock signal (SCK) and the microcontroller operates as a slave.

NOTE

See the *PG-FP5 Flash Memory Programmer User's Manual* for the details of PG-FP5, and *Renesas Flash Programmer Flash Programming Software User's Manual* for the details of Renesas Flash Programmer flash programming software.

35.6.4 Selecting the Communications System

In the RH850/P1x, the communications system is selected by the input of pulses (up to 7) to the FLMD0 pin after the chip shifts to the flash memory programming mode. These pulses are generated by the dedicated flash memory programmer.

The relationship between the communications system and the number of pulses is shown below.

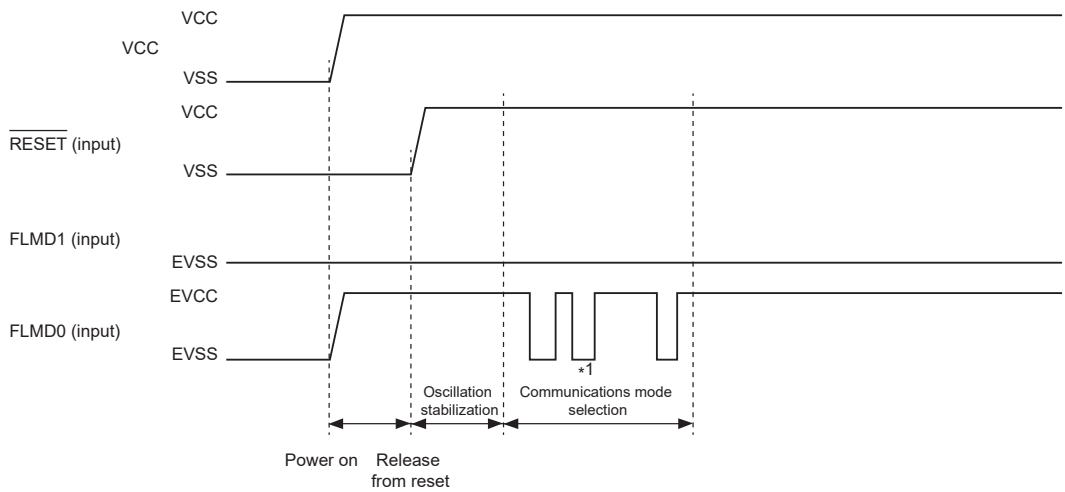

Note 1. The number of input clocks depends on the communications system as shown below.

Pulses on FLMD0	Communications System
0	Two-wire UART
7	One-wire UART
3	CSI
Others	Setting prohibited

Figure 35.8 Selecting the Communications Mode

35.7 Self-Programming

35.7.1 Overview

RH850/P1x supports programming of the flash memory by user program itself.

When the data flash memory is programmed, the background operation facility makes it possible to execute a programming program from the code flash memory to program the data flash memory. Furthermore, the programming program can be copied to local RAM in advance of the programming operation, and executed from the given destination to perform the programming.

When programming code flash memory, the programming program can be copied to the local RAM in advance and executed to program the code flash memory.

35.7.2 Background Operation

Background operations can be used when the combination of the flash memory for writing and the flash memory for reading is any of those listed below.

Table 35.7 Conditions under which Background Operation is Usable

Range for Writing	Range for Reading
Data flash memory	Code flash memory

35.7.3 Enabling of Self-Programming

The self-programming function can be activated in normal operating mode.

Erasure and programming of the code flash memory by the self-programming function is enabled by making the FLMD0 pin high level.

This prevents unnecessary overwriting of the program if the device operates incorrectly.

The FLMD0 pin is made high level by using one of the following methods.

- The FLMD0 pin is externally pulled up.
- The FLMD0 pin is pulled up by the FLMDCNT register.

The outline of the FLMDCNT register is described in **Section 35.7.3.1, FLMDCNT Register**.

35.7.3.1 FLMDCNT Register

This register specifies the internal pull-up or pull-down of the FLMD0 pin.

Writing to this register requires correctly following a sequence that also includes writing to FLMDPCMD. For details, see **Section 4.3, Write-Protected Registers**.

Access: This register can be read/written in 32-bit units.

Address: FFA0 0000_H

Value after reset: $0000\ 0000_H$

Bit	31	30	29	28	27	26	25	24	23	22	21	20	19	18	17	16
	—	—	—	—	—	—	—	—	—	—	—	—	—	—	—	—
Value after reset	0	0	0	0	0	0	0	0	0	0	0	0	0	0	0	0
R/W	R	R	R	R	R	R	R	R	R	R	R	R	R	R	R	R

Bit	15	14	13	12	11	10	9	8	7	6	5	4	3	2	1	0
	—	—	—	—	—	—	—	—	—	—	—	—	—	—	—	FLMDPUP
Value after reset	0	0	0	0	0	0	0	0	0	0	0	0	0	0	0	0
R/W	R	R	R	R	R	R	R	R	R	R	R	R	R	R	R	R/W

Table 35.8 FLMDCNT Register Contents

Bit Position	Bit Name	Function
31 to 1	Reserved	When read, the value after reset is read. When writing, write the value after reset.
0	FLMDPUP	FLMD0 Pin Software Control 0: Pull-down selected 1: Pull-up selected

35.8 Flash Memory Read

35.8.1 Code Flash Memory Read

Special settings are not required to read code flash memory in normal mode. Data can simply be read out through access to addresses in the code flash memory.

Reading from an area of code flash memory that has been erased but not yet been programmed again (i.e. that is in the non-programmed state) may lead to the detection of an ECC error and generation of the corresponding exception. Furthermore, since the values of data cannot be guaranteed when an ECC error has been generated, use blank checking when you need to confirm that an area is in the non-programmed state.

35.8.2 Data Flash Memory Read

Configure the number of read cycles in the EEPRDCYCL register prior to reading data from data flash memory in normal mode. Once this register is properly configured, data can be read by simply accessing addresses in the data flash memory. Once the setting for the number of cycles is made, data can simply be read out through access to addresses in the data flash memory.

Values read from data flash memory that has been erased but not yet been programming again are undefined. When an area of data flash memory that is in non-programmed state is read, an undefined value is read. Note that reading of an undefined value can lead to the detection of an ECC error and generation of the corresponding exception. Use blank checking when you need to confirm that an area is in the non-programmed state.

35.9 Description of Registers

35.9.1 Registers Related to Data Flash Memory

Table 35.9 shows the list of registers related to data flash memory.

Table 35.9 List of Registers Related to Data Flash Memory

Register Name	Abbreviation	R/W	Value after Reset	Address	Access Size
Data flash memory read cycle setting register	EEPRDCYCL	R/W	$0F_H$	$FFC5\ 9810_H$	8

35.9.1.1 EEPRDCYCL — Data Flash Memory Read Cycle Setting Register

This register sets the read cycle of data flash memory.

This register is reset by any reset sources.

Access: This register can be read/written in 8-bit units.

Address: $FFC5\ 9810_H$

Value after reset: $0F_H$

Bit	7	6	5	4	3	2	1	0
	—	—	—	—	FRDCYCLD[3:0]			
Value after reset	0	0	0	0	1	1	1	1
R/W	R	R	R	R	R/W	R/W	R/W	R/W

Table 35.10 EEPRDCYCL Register Contents

Bit Position	Bit Name	Function
7 to 4	Reserved	When read, the value after reset is read. When writing, write the value after reset.
3 to 0	FRDCYCLD[3:0]	Number of data flash memory read cycles Data flash memory is read in setting value + 1 cycle. 0x0 to 0x2: Setting prohibited 0x3: Read cycle 4 0x4: Read cycle 5 0x5: Read cycle 6 0x6: Read cycle 7 0x7: Read cycle 8 0x8: Read cycle 9 0x9 to 0xF: Read cycle 10

35.9.2 Registers Related to Write and Erase Protect of Flash Memory

Table 35.11 shows the list of registers related to write and erase protect of flash memory.

Table 35.11 Registers Related to Write and Erase Protect of Flash Memory

Register Name	Abbreviation	R/W	Value after Reset	Address	Access Size
FHVE15 control register	FHVE15	R/W	$0000\ 0000_H$	$FFF8\ A430_H$	32
FHVE3 control register	FHVE3	R/W	$0000\ 0000_H$	$FFF8\ 2410_H$	32

35.9.2.1 FHVE15 — FHVE15 Control Register

FHVE15 is a readable/writable register for software protection of flash memory against programming, erasure, and blank checking. Set both the FHVE15 and FHVE3 registers in the programmable, erasable, and blank-checkable state ($0000\ 0001_H$) to program, erase, or blank-check flash memory.

This register is initialized by a reset from any source.

Access: This register can be read/written in 32-bit units.

Address: $FFF8\ A430_H$

Value after reset: $0000\ 0000_H$

Bit	31	30	29	28	27	26	25	24	23	22	21	20	19	18	17	16
	—	—	—	—	—	—	—	—	—	—	—	—	—	—	—	—
Value after reset	0	0	0	0	0	0	0	0	0	0	0	0	0	0	0	0
R/W	R	R	R	R	R	R	R	R	R	R	R	R	R	R	R	R

Bit	15	14	13	12	11	10	9	8	7	6	5	4	3	2	1	0
	—	—	—	—	—	—	—	—	—	—	—	—	—	—	—	FHVE15 CNT
Value after reset	0	0	0	0	0	0	0	0	0	0	0	0	0	0	0	0
R/W	R	R	R	R	R	R	R	R	R	R	R	R	R	R	R	R/W

Table 35.12 FHVE15 Register Contents

Bit Position	Bit Name	Function
31 to 1	Reserved	When read, the value after reset is read. When writing, write the value after reset.
0	FHVE15CNT	0: Programming, erasure, and blank checking are disabled. 1: Programming, erasure, and blank checking are enabled.

35.9.2.2 FHVE3 — FHVE3 Control Register

FHVE3 is a readable/writable register for software protection of flash memory against programming, erasure, and blank checking. Set both the FHVE15 and FHVE3 registers in the programmable, erasable, and blank-checkable state ($0000\ 0001_H$) to program, erase, or blank-check flash memory.

This register is initialized by a reset from any source.

Access: This register can be read/written in 32-bit units.

Address: $FFF8\ 2410_H$

Value after reset: $0000\ 0000_H$

Bit	31	30	29	28	27	26	25	24	23	22	21	20	19	18	17	16
	—	—	—	—	—	—	—	—	—	—	—	—	—	—	—	—
Value after reset	0	0	0	0	0	0	0	0	0	0	0	0	0	0	0	0
R/W	R	R	R	R	R	R	R	R	R	R	R	R	R	R	R	R

Bit	15	14	13	12	11	10	9	8	7	6	5	4	3	2	1	0
	—	—	—	—	—	—	—	—	—	—	—	—	—	—	—	FHVE3 CNT
Value after reset	0	0	0	0	0	0	0	0	0	0	0	0	0	0	0	0
R/W	R	R	R	R	R	R	R	R	R	R	R	R	R	R	R	R/W

Table 35.13 FHVE3 Register Contents

Bit Position	Bit Name	Function
31 to 1	Reserved	When read, the value after reset is read. When writing, write the value after reset.
0	FHVE3CNT	0: Programming, erasure, and blank checking are disabled. 1: Programming, erasure, and blank checking are enabled.

35.9.3 Registers Related to Product Information

Table 35.14 lists the registers related to product information.

Table 35.14 List of Registers Related to Product Information (1/3)

Register Name	Abbreviation	R/W	Value after Reset					
			R7F701304	R7F701305	R7F701310	R7F701311	R7F701312	R7F701313
			(LFQFP 100 pins)		(LFQFP 144 pins)		(LFQFP 100 pins)	
Product name storage register (1)	PRDNAME1	R	3746 3752_H	3746 3752_H	3746 3752_H	3746 3752_H	3746 3752_H	3746 3752_H
Product name storage register (2)	PRDNAME2	R	3033 3130_H	3033 3130_H	3133 3130_H	3133 3130_H	3133 3130_H	3133 3130_H
Product name storage register (3)	PRDNAME3	R	2020 2034_H	2020 2035^H	2020 2030_H	2020 2031_H	2020 2032_H	2020 2033_H
Product name storage register (4)	PRDNAME4	R	2020 2020_H	2020 2020_H	2020 2020_H	2020 2020_H	2020 2020_H	2020 2020_H

Table 35.14 List of Registers Related to Product Information (2/3)

Register Name	Abbreviation	R/W	Value after Reset					
			R7F701314	R7F701315	R7F701318	R7F701319	R7F701320	R7F701321
			(LFQFP 144 pins)		(LFQFP 144 pins)		(LFQFP 100 pins)	
Product name storage register (1)	PRDNAME1	R	3746 3752_H	3746 3752_H	3746 3752_H	3746 3752_H	3746 3752_H	3746 3752_H
Product name storage register (2)	PRDNAME2	R	3133 3130_H	3133 3130_H	3133 3130_H	3133 3130_H	3233 3130_H	3233 3130_H
Product name storage register (3)	PRDNAME3	R	2020 2034_H	2020 2035_H	2020 2038_H	2020 2039_H	2020 2030_H	2020 2031_H
Product name storage register (4)	PRDNAME4	R	2020 2020_H	2020 2020_H	2020 2020_H	2020 2020_H	2020 2020_H	2020 2020_H

Table 35.14 List of Registers Related to Product Information (3/3)

Register Name	Abbreviation	R/W	Value after Reset	
			R7F701322	R7F701323
			(LFQFP 144 pins)	
Product name storage register (1)	PRDNAME1	R	3746 3752_H	3746 3752_H
Product name storage register (2)	PRDNAME2	R	3233 3130_H	3233 3130_H
Product name storage register (3)	PRDNAME3	R	2020 2032_H	2020 2033_H
Product name storage register (4)	PRDNAME4	R	2020 2020_H	2020 2020_H

35.9.3.1 PRDNAMEn — Product Name Storage Register (n = 1 to 4)

This register stores the product name. The product model name is stored in 16-byte ASCII code, and PRDNAME1, PRDNAME2, PRDNAME3, and PRDNAME4 correspond to the fourth to first bytes, eighth to fifth bytes, twelfth to ninth bytes, and sixteenth to thirteenth bytes of the product model name respectively.

Access: This register can only be read in 32-bit units.

Address: PRDNAME1: FFCD $00D0_H$
PRDNAME2: FFCD $00D4_H$
PRDNAME3: FFCD $00D8_H$
PRDNAME4: FFCD $00DC_H$

Value after reset: See **Table 35.14**.

Bit	31	30	29	28	27	26	25	24
	PRDNAMEn[31:24]*1							
Value after reset	0/1	0/1	0/1	0/1	0/1	0/1	0/1	0/1
R/W	R	R	R	R	R	R	R	R

Bit	23	22	21	20	19	18	17	16
	PRDNAMEn[23:16]*1							
Value after reset	0/1	0/1	0/1	0/1	0/1	0/1	0/1	0/1
R/W	R	R	R	R	R	R	R	R

Bit	15	14	13	12	11	10	9	8
	PRDNAMEn[15:8]*1							
Value after reset	0/1	0/1	0/1	0/1	0/1	0/1	0/1	0/1
R/W	R	R	R	R	R	R	R	R

Bit	7	6	5	4	3	2	1	0
	PRDNAMEn[7:0]*1							
Value after reset	0/1	0/1	0/1	0/1	0/1	0/1	0/1	0/1
R/W	R	R	R	R	R	R	R	R

Note 1. n = 1 to 4

Table 35.15 Contents of Product Name Storage Register

Bit Position	Bit Name	Function
31 to 24	—	Product name fourth byte (PRDNAME1), eighth byte (PRDNAME2) twelfth byte (PRDNAME3), sixteenth byte (PRDNAME4)
23 to 16	—	Product name third byte (PRDNAME1), seventh byte (PRDNAME2) eleventh byte (PRDNAME3), fifteenth byte (PRDNAME4)
15 to 8	—	Product name second byte (PRDNAME1), sixth byte (PRDNAME2) tenth byte (PRDNAME3), fourteenth byte (PRDNAME4)
7 to 0	—	Product name first byte (PRDNAME1), fifth byte (PRDNAME2) ninth byte (PRDNAME3), thirteenth byte (PRDNAME4)

35.10 Option Bytes

The flash memory has the extended area (option bytes) to store data specified by the user for various purposes. Changes in settings such as initial setting of peripheral functions using option bytes become effective after release from the reset state.

35.10.1 Option Byte Setting

When programming the flash memory, make sure to set option bytes that correspond to the following options.

The optional functions to be determined by option bytes are listed below.

- WDTA0 start-up sources
- Setting of OPWDOVF in WDTA0
- Setting of OPWDVAC in WDTA0
- Setting of the counter clock source of WDTA0
- Setting of the sampling clock source of CLMA2
- EVTO/EVTI setting
- AUDRAM monitor setting
- Debug interface (port group JP0) function

35.10.1.1 Setting of Option Byte 0

Bit	31	30	29	28	27	26	25	24	23	22	21	20	19	18	17	16
	OPWD RUN	—	—	—	OPWDOVF[2:0]			—	—	OPWD VAC	OPWD MDS	OPCM2 MDS	—	—	—	—

Bit	15	14	13	12	11	10	9	8	7	6	5	4	3	2	1	0
	OPEVT O	OPEVTI	—	—	—	—	—	—	—	—	—	OPAUD R0	—	—	—	—

Table 35.16 OPBT0 Setting (1/2)

Bit Position	Bit Name	Function
31	OPWDRUN	Specifies the start mode for WDTA0. 0: Software trigger start mode 1: Default start mode
30 to 28	Reserved	When writing, write 1.
27 to 25	OPWDOVF[2:0]	Specifies the reset value of the overflow interval time control bits WDTAnMD.WDTAnOVF[2:0].

OPWDOVF2	OPWDOVF1	OPWDOVF0	Overflow Time
0	0	0	2^9 / WDTATCKI
0	0	1	2^{10} / WDTATCKI
0	1	0	2^{11} / WDTATCKI
0	1	1	2^{12} / WDTATCKI
1	0	0	2^{13} / WDTATCKI
1	0	1	2^{14} / WDTATCKI
1	1	0	2^{15} / WDTATCKI
1	1	1	2^{16} / WDTATCKI

24, 23	Reserved	When writing, write 1.
22	OPWDVAC	Specifies the trigger register for generating a counter restart trigger to avoid counter overflow. 0: WDTAnWDTE (fixed) 1: WDTAnEVAC (variable) Note: For details, see **Table 21.8, WDTA Start-up Options**.
21	OPWDMDS	Selects the counter clock source of WDTA0. 0: High-speed mode (high-speed internal oscillation circuit (HS IntOSC): 8 MHz) 1: Low-speed mode (high-speed internal oscillation circuit (HS IntOSC)/32: 250 kHz)
20	OPCM2MDS	Selects the sampling clock source of CLMA2. 0: High-speed mode (Main OSC/16) 1: Low-speed mode (Main OSC/512)
19 to 16	Reserved	When writing, write 1.
15	OPEVTO	EVTO Setting 0: $\overline{\text{EVTO}}$ is used 1: $\overline{\text{EVTO}}$ is not used
14	OPEVTI	EVTI Setting 0: $\overline{\text{EVTI}}$ is used 1: $\overline{\text{EVTI}}$ is not used
13 to 5	Reserved	When writing, write 1.
4	OPAUDR0	AUD RAM Monitor Control 0: AUD RAM monitor is enabled 1: AUD RAM monitor is disabled
3	Reserved	When writing, write 1.

Table 35.16 OPBT0 Setting (2/2)

Bit Position	Bit Name	Function
2	Reserved	When writing, write 0.
1, 0	Reserved	When writing, write 1.

35.10.1.2 Setting of Option Byte 2

Bit	31	30	29	28	27	26	25	24	23	22	21	20	19	18	17	16
	—	OPJTAG[1:0]		—	—	—	—	—	—	—	—	—	—	—	—	—

Bit	15	14	13	12	11	10	9	8	7	6	5	4	3	2	1	0
	—	—	—	—	—	—	—	—	—	—	—	—	—	—	—	—

Table 35.17 OPBT2 Setting

Bit Position	Bit Name	Function
31	Reserved	When writing, write 1.
30, 29	OPJTAG[1:0]	Switch of the Debug Interfaces The following debug interface is selected depending on the combination of the OPJTAG1 and OPJTAG0. OPJTAG1 / OPJTAG0 / Debug Interface 0 / 0 / GPIO 0 / 1 / LPD (4 pins) 1 / 0 / LPD (1 pin) 1 / 1 / Nexus (JTAG)
28 to 0	Reserved	When writing, write 1.

35.10.2 OPBT0 — Option Byte 0

Access: This register can only be read in 32-bit units.

Address: FFCD 0030_H

Value after reset: Specified by the user

Bit	31	30	29	28	27	26	25	24	23	22	21	20	19	18	17	16
	OPWD RUN	—	—	—	OPWDOVF[2:0]			—	—	OPWD VAC	OPWD MDS	OPCM2 MDS	—	—	—	—
Value after reset	0/1	1	1	1	0/1	0/1	0/1	1	1	0/1	0/1	0/1	1	1	1	1
R/W	R	R	R	R	R	R	R	R	R	R	R	R	R	R	R	R

Bit	15	14	13	12	11	10	9	8	7	6	5	4	3	2	1	0
	OPEVT O	OPEVTI	—	—	—	—	—	—	—	—	—	OPAUD R0	—	—	—	—
Value after reset	0/1	0/1	1	1	1	1	1	1	1	1	1	0/1	1	0	1	1
R/W	R	R	R	R	R	R	R	R	R	R	R	R	R	R	R	R

Table 35.18 OPBT0 Contents (1/2)

Bit Position	Bit Name	Function
31	OPWDRUN	Specifies the start mode for WDTA0. 0: Software trigger start mode 1: Default start mode
30 to 28	Reserved	When read, the value after reset is read.
27 to 25	OPWDOVF[2:0]	Specifies the reset value of the overflow interval time control bits WDTAnMD.WDTAnOVF[2:0]. OPWDOVF2 / OPWDOVF1 / OPWDOVF0 / Overflow Time 0 / 0 / 0 / 2^9 / WDTATCKI 0 / 0 / 1 / 2^{10} / WDTATCKI 0 / 1 / 0 / 2^{11} / WDTATCKI 0 / 1 / 1 / 2^{12} / WDTATCKI 1 / 0 / 0 / 2^{13} / WDTATCKI 1 / 0 / 1 / 2^{14} / WDTATCKI 1 / 1 / 0 / 2^{15} / WDTATCKI 1 / 1 / 1 / 2^{16} / WDTATCKI
24, 23	Reserved	When read, the value after reset is read.
22	OPWDVAC	Specifies the trigger register for generating a counter restart trigger to avoid counter overflow. 0: WDTAnWDTE (fixed) 1: WDTAnEVAC (variable) Note: For details, see **Table 21.8, WDTA Start-up Options**.
21	OPWDMDS	Selects the counter clock source of WDTA0. 0: High-speed mode (high-speed internal oscillation: 8 MHz) 1: Low-speed mode (high-speed internal oscillation/32: 250 kHz)
20	OPCM2MDS	Selects the sampling clock source of CLMA2. 0: High-speed mode (Main OSC/16) 1: Low-speed mode (Main OSC/512)
19 to 16	Reserved	When read, the value after reset is read.
15	OPEVTO	EVTO Setting 0: $\overline{\text{EVTO}}$ is used 1: $\overline{\text{EVTO}}$ is not used

Table 35.18 OPBT0 Contents (2/2)

Bit Position	Bit Name	Function
14	OPEVTI	EVTI Setting 0: $\overline{\text{EVTI}}$ is used 1: $\overline{\text{EVTI}}$ is not used
13 to 5	Reserved	When read, the value after reset is read.
4	OPAUDR0	AUD RAM Monitor Control 0: AUD RAM monitor is enabled 1: AUD RAM monitor is disabled
3	Reserved	When read, the value after reset is read.
2	Reserved	When read, the value after reset is read.
1, 0	Reserved	When read, the value after reset is read.

35.10.3 OPBT2 — Option Byte 2

Access: This register can only be read in 32-bit units.

Address: FFCD 0038_H

Value after reset: Specified by the user

Bit	31	30	29	28	27	26	25	24	23	22	21	20	19	18	17	16
	—	OPJTAG[1:0]		—	—	—	—	—	—	—	—	—	—	—	—	—
Value after reset	1	0/1	0/1	1	1	1	1	1	1	1	1	1	1	1	1	1
R/W	R	R	R	R	R	R	R	R	R	R	R	R	R	R	R	R

Bit	15	14	13	12	11	10	9	8	7	6	5	4	3	2	1	0
	—	—	—	—	—	—	—	—	—	—	—	—	—	—	—	—
Value after reset	1	1	1	1	1	1	1	1	1	1	1	1	1	1	1	1
R/W	R	R	R	R	R	R	R	R	R	R	R	R	R	R	R	R

Table 35.19 OPBT2 Contents

Bit Position	Bit Name	Function
31	Reserved	When read, the value after reset is read.
30, 29	OPJTAG[1:0]	Switch of the Debug Interfaces The following debug interface is selected depending on the combination of the OPJTAG1 and OPJTAG0.

OPJTAG1	OPJTAG0	Debug Interface
0	0	GPIO
0	1	LPD (4 pins)
1	0	LPD (1 pin)
1	1	Nexus (JTAG)

28 to 0	Reserved	When read, the value after reset is read.

35.11 ECC Test Area

In the ECC test area in **Figure 35.1**, data to test the ECC decoder of code flash is stored (**Table 35.20, ECC Test Data**). The user can attempt intentional error injection to the ECC decoder by reading data from this area.

Table 35.20 ECC Test Data

Address	Pattern name	Flash content																									
		ECC (bit)									Data (bit)																
		8	7	6	5	4	3	2	1	0	127	126	125	124	123	122	121	120	...	7	6	5	4	3	2	1	0
0100 A000$_H$	Walking-1	0	0	1	0	0	1	0	1	1	0	0	0	0	0	0	0	0	...	0	0	0	0	0	0	0	0
0100 A010$_H$	Walking-1	1	1	1	0	0	1	0	1	1	0	0	0	0	0	0	0	0	...	0	0	0	0	0	0	0	0
0100 A020$_H$	Walking-1	1	0	0	0	0	1	0	1	1	0	0	0	0	0	0	0	0	...	0	0	0	0	0	0	0	0
0100 A030$_H$	Walking-1	1	0	1	1	0	1	0	1	1	0	0	0	0	0	0	0	0	...	0	0	0	0	0	0	0	0
0100 A040$_H$	Walking-1	1	0	1	0	1	1	0	1	1	0	0	0	0	0	0	0	0	...	0	0	0	0	0	0	0	0
0100 A050$_H$	Walking-1	1	0	1	0	0	0	0	1	1	0	0	0	0	0	0	0	0	...	0	0	0	0	0	0	0	0
0100 A060$_H$	Walking-1	1	0	1	0	0	1	1	1	1	0	0	0	0	0	0	0	0	...	0	0	0	0	0	0	0	0
0100 A070$_H$	Walking-1	1	0	1	0	0	1	0	0	1	0	0	0	0	0	0	0	0	...	0	0	0	0	0	0	0	0
0100 A080$_H$	Walking-1	1	0	1	0	0	1	0	1	0	0	0	0	0	0	0	0	0	...	0	0	0	0	0	0	0	0
0100 A090$_H$	Walking-1	1	0	1	0	0	1	0	1	1	1	0	0	0	0	0	0	0	...	0	0	0	0	0	0	0	0
0100 A0A0$_H$	Walking-1	1	0	1	0	0	1	0	1	1	0	1	0	0	0	0	0	0	...	0	0	0	0	0	0	0	0
0100 A0B0$_H$	Walking-1	1	0	1	0	0	1	0	1	1	0	0	1	0	0	0	0	0	...	0	0	0	0	0	0	0	0
0100 A0C0$_H$	Walking-1	1	0	1	0	0	1	0	1	1	0	0	0	1	0	0	0	0	...	0	0	0	0	0	0	0	0
0100 A0D0$_H$	Walking-1	1	0	1	0	0	1	0	1	1	0	0	0	0	1	0	0	0	...	0	0	0	0	0	0	0	0
0100 A0E0$_H$	Walking-1	1	0	1	0	0	1	0	1	1	0	0	0	0	0	1	0	0	...	0	0	0	0	0	0	0	0
0100 A0F0$_H$	Walking-1	1	0	1	0	0	1	0	1	1	0	0	0	0	0	0	1	0	...	0	0	0	0	0	0	0	0
0100 A100$_H$	Walking-1	1	0	1	0	0	1	0	1	1	0	0	0	0	0	0	0	1	...	0	0	0	0	0	0	0	0
...	Walking-1	1	0	1	0	0	1	0	1	1	0	0	0	0	0	0	0	0	...	0	0	0	0	0	0	0	0
0100 A810$_H$	Walking-1	1	0	1	0	0	1	0	1	1	0	0	0	0	0	0	0	0	...	1	0	0	0	0	0	0	0
0100 A820$_H$	Walking-1	1	0	1	0	0	1	0	1	1	0	0	0	0	0	0	0	0	...	0	1	0	0	0	0	0	0
0100 A830$_H$	Walking-1	1	0	1	0	0	1	0	1	1	0	0	0	0	0	0	0	0	...	0	0	1	0	0	0	0	0
0100 A840$_H$	Walking-1	1	0	1	0	0	1	0	1	1	0	0	0	0	0	0	0	0	...	0	0	0	1	0	0	0	0
0100 A850$_H$	Walking-1	1	0	1	0	0	1	0	1	1	0	0	0	0	0	0	0	0	...	0	0	0	0	1	0	0	0
0100 A860$_H$	Walking-1	1	0	1	0	0	1	0	1	1	0	0	0	0	0	0	0	0	...	0	0	0	0	0	1	0	0
0100 A870$_H$	Walking-1	1	0	1	0	0	1	0	1	1	0	0	0	0	0	0	0	0	...	0	0	0	0	0	0	1	0
0100 A880$_H$	Walking-1	1	0	1	0	0	1	0	1	1	0	0	0	0	0	0	0	0	...	0	0	0	0	0	0	0	1
0100 A890$_H$	ALL-1	1	0	1	0	0	1	0	1	1	1	1	1	1	1	1	1	1	...	1	1	1	1	1	1	1	1
0100 A8A0$_H$	ALL-0	1	0	1	0	0	1	0	1	1	0	0	0	0	0	0	0	0	...	0	0	0	0	0	0	0	0
0100 A8B0$_H$	Double bit	1	0	1	0	0	1	0	1	1	1	1	0	0	0	0	0	0	...	0	0	0	0	0	0	0	0
0100 A8C0$_H$	ALL-1	1	0	1	0	0	1	0	1	1	1	1	1	1	1	1	1	1	...	1	1	1	1	1	1	1	1
0100 A8D0$_H$	ALL-1	1	0	1	0	0	1	0	1	1	1	1	1	1	1	1	1	1	...	1	1	1	1	1	1	1	1
...	ALL-1	1	0	1	0	0	1	0	1	1	1	1	1	1	1	1	1	1	...	1	1	1	1	1	1	1	1
0100 BFF0$_H$	ALL-1	1	0	1	0	0	1	0	1	1	1	1	1	1	1	1	1	1	...	1	1	1	1	1	1	1	1

35.12 Usage Notes

1. Reading areas where programming or erasure was interrupted
   When programming or erasure of an area of flash memory is interrupted, the data stored in the area become undefined. To avoid undefined data that are read out becoming the source of faulty operation, take care not to fetch instructions or read data from areas where programming or erasure was interrupted.

2. Reading the code flash memory that has been erased but not yet been programming again
   Note that reading from an area of code flash memory that has been erased but not yet been programming again (i.e. that is in the non-programmed state) can lead to the detection of an ECC error and generation of the corresponding exception. Use blank checking when you need to confirm that an area is in the non-programmed state.

3. Prohibition of additional writing
   Writing to a given area twice is not possible. If you want to overwrite data in an area of flash memory after writing to the area has been completed, erase the area first.

4. Resets during programming and erasure
   In the case of a reset due to the signal on the $\overline{\text{RESET}}$ pin during programming and erasure, wait for at least 20 μs once the operating voltage is within the range stipulated in the electrical characteristics after assertion of the reset signal before releasing the device from the reset state.

5. Allocation of vectors for interrupts and other exceptions during programming and erasure
   Generation of an interrupt or other exception during programming or erasure may lead to fetching of the vector from the code flash memory. If this does not satisfy the conditions for using background operation, set the address for vector fetching to an address that is not in the code flash memory.

6. Abnormal termination of programming and erasure (1)
   Even if programming/erasure ends abnormally due to reset input or power off, the programming/erasure state of the flash memory with undefined data cannot be verified or checked. Therefore, before using the area where programming/erasure has ended abnormally, erase the area again to prove that the corresponding area is completely erased.

7. Abnormal termination of programming and erasure (2)
   If programming and erasure of code flash memory are not completed normally, the lock bit for the target area may be enabled. In such cases, erase the block to erase the lock bit while the lock bit is in the disabled state.

8. Items prohibited during programming and erasure and blank checking
   Do not perform the following operations during programming and erasure and blank checking.
   - Have the operating voltage from the power supply go beyond the allowed range.
   - Update the values of FHVE15 and FHVE3.

Section 36 RAM

36.1 List of On-Chip RAMs

RH850/P1x includes the following RAMs.

- Local RAM (PE1): 128 Kbytes (for products with 2 Mbytes or 1 Mbyte of flash memory)
  64 Kbytes (for products with 512 Kbytes of flash memory)
- Emulation RAM: 32 Kbytes (for products with 2 Mbytes of flash memory)
  8 Kbytes (for products with 1 Mbyte or 512 Kbytes of flash memory)

36.2 Features

Access:

The CPU, DMAC, and H-Bus can access the local RAM (PE1).

Backup Registers:

The values in the on-chip RAM will be undefined after self-diagnosis (BIST) is executed. Storing data in backup registers before self-diagnosis (BIST) enables the retention of data during self-diagnosis (BIST). There are four backup registers (128 bits in total).

Emulation RAM:

The specific area of the code flash can be replaced with this RAM per page. The access latency from the CPU after replacement is the same as that of the code flash.

ECC:

The Local RAM (PE1) includes the ECC.

For details, see **Section 31, Functional Safety**.

36.3 Backup Register

36.3.1 List of Registers

Backup registers are listed in the following table.

Table 36.1 List of Registers

Register Name	Symbol	Address
Backup register 0	BRAMDAT0	FFC0 $A000_H$
Backup register 1	BRAMDAT1	FFC0 $A004_H$
Backup register 2	BRAMDAT2	FFC0 $A008_H$
Backup register 3	BRAMDAT3	FFC0 $A00C_H$

36.3.2 BRAMDATn — Backup Register

BRAMDATn registers can be read/written in 32-bit units.

Storing data in backup registers before self-diagnosis (BIST) enables the retention of data during this test.

This register is not initialized by any reset source.

Access This register can be read/written in 32-bit units.

Address FFC0 $A000_H$ + n x 4_H (n = 0 to 3)

Bit	31	30	29	28	27	26	25	24	23	22	21	20	19	18	17	16
	BRAMDTn[31:16]															
R/W	R/W	R/W	R/W	R/W	R/W	R/W	R/W	R/W	R/W	R/W	R/W	R/W	R/W	R/W	R/W	R/W

Bit	15	14	13	12	11	10	9	8	7	6	5	4	3	2	1	0
	BRAMDTn[15:0]															
R/W	R/W	R/W	R/W	R/W	R/W	R/W	R/W	R/W	R/W	R/W	R/W	R/W	R/W	R/W	R/W	R/W

36.4 Emulation RAM

36.4.1 Emulation RAM

RH850/P1x includes the emulation RAM to emulate the code flash. RH850/P1x has the one-bank code flash memory. The emulation RAM is configured of 8 Kbytes (one 8-Kbyte bank) of flash memory for products with 512 Kbytes or 1 Mbyte of flash memory and 32 Kbytes (four 8-Kbyte banks) for products with 2 Mbytes of flash memory. The emulation RAM is available in the code flash emulation described below.

36.4.2 Code Flash Emulation Function Using the Emulation RAM

Mapping to the code flash area enables code flash to move to the emulation RAM and it enables the emulation RAM to emulate the code flash. The ROM data can be dynamically modified during execution of a user program via the emulation RAM which has mapped to the code flash area.

Figure 36.1 shows the circuit configuration around the emulation RAM.

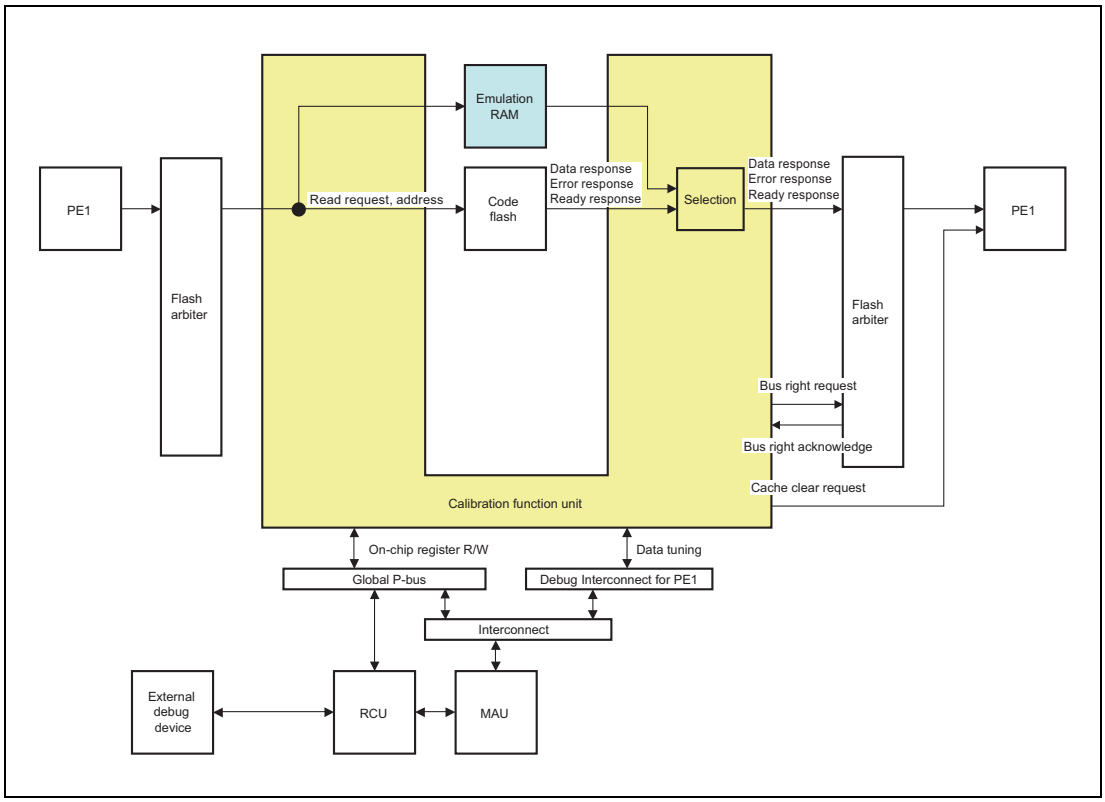

Figure 36.1 Circuit Configuration around the Emulation RAM

36.4.3 Memory Map of Emulation RAM

The memory map of the ERAM in this product is shown below.

In the ERAM area, banks 0 to 3 of the ERAM are mapped in order to addresses that are 8-Kbyte boundaries. The ERAM has 32 banks. Banks 0 to 3 each have 8 Kbytes (for a total of 32 Kbytes).

Bank 0 is mapped with 8 Kbytes for flash 512-KB and 1-MB products.

The ERAM area can be read and written only in 32-bits unit.

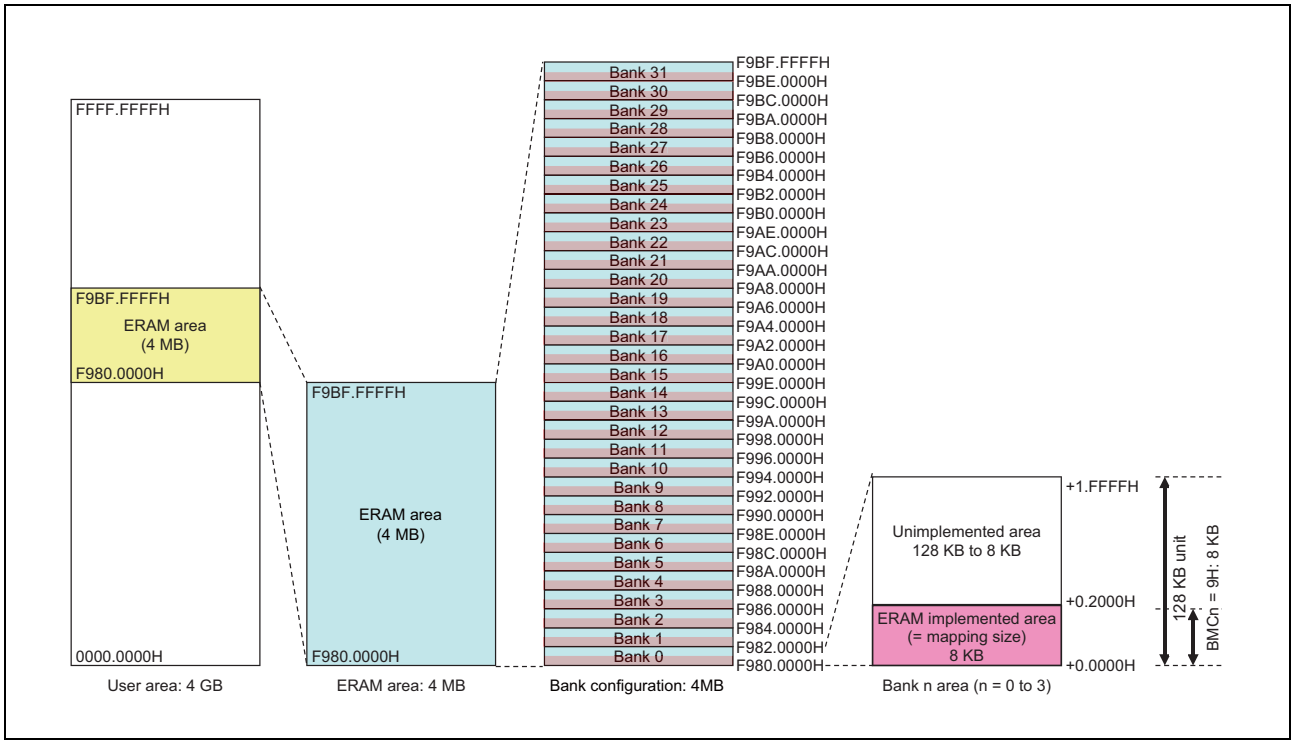

Figure 36.2 Memory Map of Emulation RAM

36.4.4 List of CFU Registers

The list below shows function registers that control operations of the calibration function unit (CFU). Flash 512-KB and 1-MB products have only bank 0.

The base address of the CFU is FFFF 7800_H.

Table 36.2 List of Function Registers

Address	Register Name	Function
<CFU_base> + 10_H	TM_ME	ERAM banks 0 to 3 mapping enable register
<CFU_base> + 14_H	TM_MS	ERAM banks 0 to 3 mapping status register
<CFU_base> + 30_H	TM_BMC0	ERAM banks 0 to 3 mapping size configuration register
<CFU_base> + 40_H	TM_MA0	ERAM bank 0 mapping address register
<CFU_base> + 44_H	TM_MA1	ERAM bank 1 mapping address register
<CFU_base> + 48_H	TM_MA2	ERAM bank 2 mapping address register
<CFU_base> + $4C_H$	TM_MA3	ERAM bank 3 mapping address register

36.4.5 TM_ME — Tuning Memory Mapping Enable Register

This register is used to control mapping of ERAM banks 0 to 3 to the flash memory area.

Access: This register can be read/written in 32-bit units.

Address: FFFF 7810_H

Value after reset $0000\ 0000_H$

Bit	31	30	29	28	27	26	25	24	23	22	21	20	19	18	17	16
	—	—	—	—	—	—	—	—	—	—	—	—	—	—	—	—
Value after reset	0	0	0	0	0	0	0	0	0	0	0	0	0	0	0	0
R/W	R	R	R	R	R	R	R	R	R	R	R	R	R	R	R	R

Bit	15	14	13	12	11	10	9	8	7	6	5	4	3	2	1	0
	—	—	—	—	—	—	—	—	—	—	—	—	TME[3:0]			
Value after reset	0	0	0	0	0	0	0	0	0	0	0	0	0	0	0	0
R/W	R	R	R	R	R	R	R	R	R	R	R	R	R/W	R/W	R/W	R/W

Table 36.3 TM_ME Register Contents

Bit Position	Bit name	Functions
31 to 4	Reserved	When read, the value after reset is read. When writing, write the value after reset.
3 to 0	TME[3:0]	Tuning memory bank n mapping enable (n = 0 to 3) Control the mapping of ERAM banks n (n = 0 to 3) to the user area (flash memory area). 0: Mapping is disabled 1: Mapping is enabled

Note 1. When the mapping enable bit TMEn is updated (including writing of its current value again), the cache is cleared.

Note 2. The corresponding mapping enable bit TMEn must be set to 0 (bank n is not mapped) before ERAM bank n and the tuning memory mapping address register n (TM_Man register) is updated.

Note 3. After an update of the TM_ME register, wait and verify that the value in the TM_MS register has become the same as the setting of the TM_ME register.

36.4.6 TM_MS — Tuning Memory Mapping Status Register

This register is used to indicate the state of mapping to the flash memory area of ERAM banks 0 to 3.

Access: This register can be read in 32-bit units.

Address: FFFF 7814_H

Value after reset $0000\ 0000_H$

Bit	31	30	29	28	27	26	25	24	23	22	21	20	19	18	17	16
	—	—	—	—	—	—	—	—	—	—	—	—	—	—	—	—
Value after reset	0	0	0	0	0	0	0	0	0	0	0	0	0	0	0	0
R/W	R	R	R	R	R	R	R	R	R	R	R	R	R	R	R	R

Bit	15	14	13	12	11	10	9	8	7	6	5	4	3	2	1	0
	—	—	—	—	—	—	—	—	—	—	—	—	MES[3:0]			
Value after reset	0	0	0	0	0	0	0	0	0	0	0	0	0	0	0	0
R/W	R	R	R	R	R	R	R	R	R	R	R	R	R	R	R	R

Table 36.4 TM_MS Register Contents

Bit Position	Bit name	Functions
31 to 4	Reserved	When read, the value after reset is read.
3 to 0	MES[3:0]	Tuning memory bank n mapping enable status (n = 0 to 3) These bits indicate the state of mapping of ERAM banks n (n = 0 to 3) to the user area (flash area). 0: The bank is not being mapped. 1: The bank is being mapped.

36.4.7 TM_BMC0 — Tuning Memory Bank Mapping Size Configuration Registers 0

These registers are used to set mapping size of banks 0 to 3 of the ERAM.

Access: This register can be read/written in 32-bit units.

Address: FFFF 7830_H

Value after reset $0000\ 0000_H$

Bit	31	30	29	28	27	26	25	24	23	22	21	20	19	18	17	16
	—	—	—	—	—	—	—	—	—	—	—	—	—	—	—	—
Value after reset	0	0	0	0	0	0	0	0	0	0	0	0	0	0	0	0
R/W	R	R	R	R	R	R	R	R	R	R	R	R	R	R	R	R

Bit	15	14	13	12	11	10	9	8	7	6	5	4	3	2	1	0
	—	—	—	—	—	—	—	—	—	—	—	—	BMC0			
Value after reset	0	0	0	0	0	0	0	0	0	0	0	0	0	0	0	0
R/W	R	R	R	R	R	R	R	R	R	R	R	R	R/W*1	R/W*1	R/W*1	R/W*1

Note 1. Mapping size can only be set for bank 0. The setting of bank 0 is automatically reflected to banks 1 to 3 for the products with flash 2-MB memory.

Table 36.5 TM_BMC0 Register Contents

Bit Position	Bit name	Functions
31 to 4	Reserved	When read, the value after reset is read. When writing, write the value after reset.
3 to 0	BMC0	Bank 0 mapping size setting

Mapping size of each bank (banks 0 to 3) of the ERAM is set.

BMC0 value setting	Mapping Size	BMC0 value setting	Mapping Size
0_H	Reserved (setting prohibited)	8_H	Reserved (setting prohibited)
1_H	Reserved (setting prohibited)	9_H	8 KB/bank
2_H	Reserved (setting prohibited)	A_H	Reserved (setting prohibited)
3_H	Reserved (setting prohibited)	B_H	Reserved (setting prohibited)
4_H	Reserved (setting prohibited)	C_H	Reserved (setting prohibited)
5_H	Reserved (setting prohibited)	D_H	Reserved (setting prohibited)
6_H	Reserved (setting prohibited)	E_H	Reserved (setting prohibited)
7_H	Reserved (setting prohibited)	F_H	Reserved (setting prohibited)

Only the following combinations of settings for mapping size are available.

ERAM Capacity	Bank 0 to 3 Mapping Size Setting
32 KB*1	9_H (8 KB/bank)

Note 1. Products with 512-BM or 1-MB memory is 8 KB.

CAUTION

The corresponding all mapping enable bit TMEn must be set to 0 (bank n is not mapped) before updating the tuning memory bank mapping size configuration register (TM_BMC0 register) (n = 0 to 3).

36.4.8 TM_MA0 to 3 — Tuning Memory Mapping Address Registers 0 to 3

These registers are used to set mapping addresses for banks 0 to 3 of the ERAM.

Access: This register can be read/written in 32-bit units.

Address: FFFF 7840_H to FFFF $784C_H$

Value after reset $0000\ 0000_H$

Bit	31	30	29	28	27	26	25	24	23	22	21	20	19	18	17	16
	TMAn[31:16]															
Value after reset	0	0	0	0	0	0	0	0	0	0	0	0	0	0	0	0
R/W	R	R	R	R	R	R	R	R/W	R/W	R/W	R/W	R/W	R/W	R/W	R/W	R/W

Bit	15	14	13	12	11	10	9	8	7	6	5	4	3	2	1	0
	TMAn[15:0]															
Value after reset	0	0	0	0	0	0	0	0	0	0	0	0	0	0	0	0
R/W	R/W	R/W	R/W	R	R	R	R	R	R	R	R	R	R	R	R	R

Table 36.6 TM_MA0 to 3 Register Contents

Bit Position	Bit name	Functions
31 to 0	TMAn[31:0]	Tuning memory mapping address n (n = 0 to 3) Specify addresses for mapping ERAM banks n. **CAUTION** ● TMAn31 to 25 and TMAn12 to 0 are fixed to 0.

BMCn	Mapping Unit	Mapping Judge Bit	Bit to be Ignored
9_H	8 KB/bank	TMAn24 to 13	TMAn31 to 25, 12 to 0

CAUTIONS

1. The corresponding mapping enable bit TMEn must be set to 0 (bank n is not mapped) before updating the tuning memory mapping address register n (TM_MAn registers).
2. Mapping settings of banks 0 to 3 of the ERAM (mapping addresses of banks specified as being mapped) must be controlled so that the settings do not overlap. Correct operation is not guaranteed when mapping settings are such that multiple banks overlap.
3. Specify the address in the code flash area as the mapping address. Correct operation is not guaranteed if any other address is specified.

36.4.9 Flow of Processing for Tuning

The flow of processing for tuning is shown below.

(1)	Mapping initial setting handling
(1-0)	Set the size and address of bank n to be tuned[*1] Tuning memory bank mapping size configuration register 0 TM_BMC0 Tuning memory mapping address register 0 to 3 TM_MA0 to TM_MA3
(2)	Handling tuning data
(2-1)	Write data to the ERAM area for use in tuning
(3)	Mapping the banks
(3-1)	Set the mapping enable bits TMEn in banks n for which tuning is complete (n = 0 to 3) to 1 (mapping bank).
(3-2)	Read the mapping status bit MESn to verify the completion of mapping settings.

Note 1. Set the corresponding mapping enable bit TMEn to 0 (de-mapping bank) to update the register.

When data are tuned (programming of data in the ERAM area) in a mapped bank, the cache must be cleared after tuning of the data.

36.4.10 Notes on Access to ERAM

When accessing from CPU1 to the ERAM area, a lock step compare error may occur.

Disable interrupts, resets, and error output due to the lock step compare error by setting the ECM.

Register access by the CFU does not cause the lock step compare error.

36.5 Usage Notes

When the ECC error detection/correction function is enabled for the local RAM, initialize the RAM using a write instruction with the maximum bit length of its access size before using the RAM.

If the RAM is accessed before its initialization, an ECC error may be detected. Also if initialization with the maximum bit length is not performed (e.g. if a 32-bit RAM is initialized by an 8-bit or 16-bit access), an ECC error may be detected.

On path between Local RAM and CPU, buffers are implemented to realize fast Local RAM access.

Threfore when a load instruction is executed for the same address after a store instruction to Local RAM, the load instruction may read out data from buffers istead of data on Lacal RAM. Either of following procedure is to surely read data on Local RAM, Eithre of following procedures can be used to surely read data on Local RAM.

1. Read out the first written data, only after more than 32 bytes of data are written into Local RAM.
2. Execute a SYNCM instruction before a load instruction is executed on the same address after a store instruction to the Local RAM.

Section 37 Electrical Specifications

37.1 Overview

The specifications in this section are for devices operating under the following conditions. Where a special condition is required for a given specification, the condition will be indicated. Furthermore, the specifications in this section are not guaranteed unless the conditions listed below are met.

37.1.1 General Measurement Conditions

37.1.1.1 Common Conditions

- Power supply
  - VCC = 3.0 V to 5.5 V
  - EVCC = 3.0 V to 5.5 V
  - VDD = 1.20 V to 1.35 V*1
  - A0VCC, A1VCC = 3.0 V to 5.5 V
  - A0VREFH = 3.0 V to 5.5 V
  - A1VREFH = 3.0 V to 5.5 V
  - EVSS = VSS = A0VSS = A1VSS = 0 V
- Capacitance of the internal regulator
  - CVCL: 0.1 µF +/– 30%*2
- Operating temperature
  - Tj = –40 to +150°C
- Load conditions
  - CL = 30 pF

Note 1. Only applicable for DPS products

Note 2. See **Section 37.7, Regulator Characteristics**.

37.1.1.2 AC Characteristic Measurement Condition

(1) AC test input measurement points

(2) AC test output measurement points

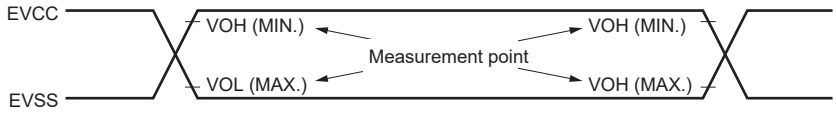

(3) Load conditions

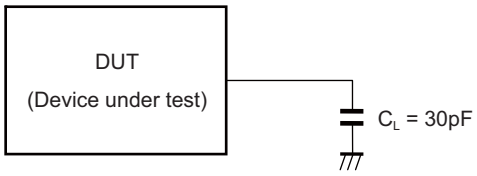

CAUTION

If the load capacitance exceeds 30 pF due to the circuit configuration, it is recommended to insert a buffer in order to reduce capacitance till less than 30 pF.

37.2 Absolute Maximum Ratings

Absolute maximum ratings are shown in the table below.

Item	Symbol	Condition	MIN.	TYP.	MAX.	Unit
Power voltage	VCC		–0.3		6.5	V
	EVCC		–0.3		6.5	V
	A0VCC		–0.3		6.5	V
	A1VCC		–0.3		6.5	V
	VDD		–0.3		1.8	V
Input voltage	VI	EVCC pin	–0.3		EVCC + 0.3	V
		VCC pin	–0.3		VCC + 0.3	V
Analogue reference voltage	A0VREFH		–0.3		A0VCC + 0.3	V
	A1VREFH		–0.3		A1VCC + 0.3	V
Analog input voltage	VAIN	A0VCC pin	–0.3		A0VCC + 0.3	V
		A1VCC pin	–0.3		A1VCC + 0.3	V
Low level output current	IOL	1 pin			10	mA
		Total			80	mA
High level output current	IOH	1 pin			–10	mA
		Total			–80	mA
Junction temperature	Tj		–40		150	°C
Storage temperature	Tstg		–55		150	°C

Note: Ta = 25°C
VSS = EVSS = A0VSS = A1VSS = 0 V

CAUTIONS

1. Using this device without observing these absolute maximum ratings may result in permanent breakdown of the it.
2. This device is used in combination of multiple power voltages simultaneously in some cases. Use this device conforming to power pin connections, conditions for combination of power voltages to be applied, voltages that can be applied to pins, and output voltage conditions, which are specified in the manual. Using this device with unspecified power connection or voltage may result in permanent breakdown of the device or damage to the system that contains the device.
3. Input voltage, analog reference voltage and analog input voltage must not exceed 6.5 V.

37.3 Supply Voltage Characteristics

Symbol	MIN.	TYP.	MAX.	Unit
VCC*1	3.0		5.5	V
EVCC*1	3.0		5.5	V
VDD*2	1.20		1.35	V
A0VCC A1VCC	3.0		5.5	V
A0VREFH*3 A1VREFH	3.0		5.5	V

Note: VSS = EVSS = A0VSS = A1VSS = 0 V

Note 1. VCC and EVCC should be supplied from the same power source.

Note 2. Applicable only for DPS products.

Note 3. Do not exceed A0VCC or A1VCC.

CAUTION

During operations, supply the specified voltages to all power lines. When stopping operation, turn off all of the power supplies.

37.4 Oscillator Characteristics

Conditions: See **Section 37.1.1.1, Common Conditions**.

Item	Symbol	Condition	MIN.	TYP.	MAX.	Unit
MainOSC frequency	f_{MOSC}			16		MHz

CAUTION

Oscillation stabilization times differ according to matching with the resonator. Secure an oscillation stabilization time determined through evaluation of matching.

37.5 Characteristics of High-Speed Internal Oscillator Circuit

Conditions: See **Section 37.1.1.1, Common Conditions**.

Item	Symbol	Condition	MIN.	TYP.	MAX.	Unit
High-speed internal oscillator circuit (HS IntOSC) frequency	f_{RH}		7.2	8	8.8	MHz

37.6 PLL Characteristics

Conditions: See **Section 37.1.1.1, Common Conditions**.

Item	Symbol	Condition	MIN.	TYP.	MAX.	Unit
Input frequency	$f_{PLLICLK}$			16		MHz
Output frequency (PLL for CPU)	f_{CPLL}	—		160		MHz

37.7 Regulator Characteristics

Conditions: See **Section 37.1.1.1, Common Conditions**.

Item	Symbol	Condition	MIN.	TYP.	MAX.	Unit
Input voltage	VCC		3.0		5.5	V
Output voltage	VCL		1.15	1.25	1.35	V
Capacitance	CVCL	Per pin[*1]	0.07	0.1	0.13	μF

Note 1. For the connection of the VCL pin, see **Section 2.4.2, Handling of Unused Pins**.

37.8 DC Characteristics

37.8.1 Relationship between Power Name and Pin

Table below shows the relationship between power name and pin.

Pin Name	Power Name	I/O	Input Buffer Type	Note
JP0_4	VCC	I	SchmittA	5 V tolerant
JP0_2	EVCC	I	CMOS/SchmittA	
JPx_x other than the above	EVCC	I/O	CMOS/SchmittB	Output driving ability selectable
P0_10	EVCC	I/O	CMOS	Output driving ability selectable
Py_y Pins listed in **Table 2.34, Selection of Input Buffer Characteristics**	EVCC	I/O	CMOS/SchmittB	Output driving ability selectable
Pz_z other than the above	EVCC	I/O	SchmittB	Output driving ability selectable
ADCD0Ixx	A0VCC	I	Analog (ADC)	
ADCD1Ixx	A1VCC	I	Analog (ADC)	
$\overline{\text{RESET}}$	VCC	I	SchmittA	5 V tolerant
FLMD0	EVCC	I	SchmittC	5 V tolerant
$\overline{\text{ERROROUT}}$	EVCC	O	—	
$\overline{\text{CVMOUT}}$	EVCC	O	—	
X1	VCC	I	—	
X2	VCC	O	—	

37.8.2 Buffer Characteristics

Conditions: See **Section 37.1.1.1, Common Conditions**.

Item	Symbol	Measuring Condition		MIN.	TYP.	MAX.	Unit
High level input voltage	VIH	CMOS	3.0 V ≤ EVCC < 4.3 V	0.65 × EVCC		EVCC + 0.3	V
			4.3 V ≤ EVCC ≤ 5.5 V	0.65 × EVCC		EVCC + 0.3	V
		SchmittA	3.0 V ≤ EVCC < 4.3 V	0.8 × EVCC 0.8 × VCC		EVCC + 0.3 VCC + 0.3	V
			4.3 V ≤ EVCC ≤ 5.5 V	0.75 × EVCC 0.75 × VCC		EVCC + 0.3 VCC + 0.3	V
		SchmittB	3.0 V ≤ EVCC < 4.3 V	0.75 × EVCC		EVCC + 0.3	V
			4.3 V ≤ EVCC ≤ 5.5 V	0.75 × EVCC		EVCC + 0.3	V
		SchmittC	3.0 V ≤ EVCC < 4.3 V	0.75 × EVCC		EVCC + 0.3	V
			4.3 V ≤ EVCC ≤ 5.5 V	0.7 × EVCC		EVCC + 0.3	V
Low level input voltage	VIL	CMOS	3.0 V ≤ EVCC < 4.3 V	–0.3		0.35 × EVCC	V
			4.3 V ≤ EVCC ≤ 5.5 V	–0.3		0.35 × EVCC	V
		SchmittA	3.0 V ≤ EVCC < 4.3 V	–0.3		0.25 × EVCC 0.25 × VCC	V
			4.3 V ≤ EVCC ≤ 5.5 V	–0.3		0.25 × EVCC 0.25 × VCC	V
		SchmittB	3.0 V ≤ EVCC < 4.3 V	–0.3		0.4 × EVCC	V
			4.3 V ≤ EVCC ≤ 5.5 V	–0.3		0.42 × EVCC	V
		SchmittC	3.0 V ≤ EVCC ≤ 5.5V	–0.3		0.3 × EVCC	V
High level output voltage	VOH	IOH = –3mA[*1]	3.0 V ≤ EVCC < 4.3 V	EVCC – 1.0			V
			4.3 V ≤ EVCC ≤ 5.5 V	EVCC – 1.0			V
		IOH = –1mA[*1]	3.0 V ≤ EVCC < 4.3 V	EVCC – 1.0			V
			4.3 V ≤ EVCC ≤ 5.5 V	EVCC – 1.0			V
		IOH = –0.1mA[*1]	3.0 V ≤ EVCC < 4.3 V	EVCC – 0.5			V
			4.3 V ≤ EVCC ≤ 5.5 V	EVCC – 0.5			V
Low level output voltage	VOL	IOL = 3mA[*1]	3.0 V ≤ EVCC < 4.3 V			0.6	V
			4.3 V ≤ EVCC ≤ 5.5 V			0.5	V
		IOL = 1mA[*1]	3.0 V ≤ EVCC < 4.3 V			0.4	V
			4.3 V ≤ EVCC ≤ 5.5 V			0.4	V
Pull-up resistance	RU	Other than the below	3.0V ≤ EVCC < 4.3 V	30	60	150	kΩ
			4.3V ≤ EVCC ≤ 5.5V	20	40	100	kΩ
		FLMD0	3.0V ≤ EVCC < 4.3V	10	19	50	kΩ
			4.3V ≤ EVCC ≤ 5.5V	10	19	50	kΩ
Pull-down resistance	RD	Other than the below	3.0 V ≤ EVCC < 4.3 V	15	40	125	kΩ
			4.3 V ≤ EVCC ≤ 5.5 V	15	40	100	kΩ
		$\overline{\text{RESET}}$, FLMD0	3.0 V ≤ EVCC < 3.6 V	20	60	150	kΩ
			3.6 V ≤ EVCC < 4.3 V	20	60	150	kΩ
			4.3 V ≤ EVCC ≤ 5.5 V	20	40	100	kΩ
Input leak current	ILIH1	Other than the below	Vin = VCC, EVCC			2	μA
		ADCDnIm (n = 0,1, m = 0 to 11)	Vin = A0VCC, A1VCC When AD conversion is not performed:			0.2	μA
	ILIL1	Other than the below	Vin = 0 V			–2	μA
		ADCDnIm (n = 0,1, m = 0 to 11)	Vin = 0 V When AD conversion is not performed:			–0.2	μA

Item	Symbol	Measuring Condition	MIN.	TYP.	MAX.	Unit
Hysteresis width	VH	SchmittA		0.27 × EVCC		V
		SchmittB		0.1 × EVCC		V
		SchmittC		0.2 × EVCC		V

Note 1. Total load current is 48 mA for the pins when everything is switched on at the same time. However, the total load current must be no greater than 12 mA for pins 38 to 53 pins on 100-pin devices.

37.8.3 Allowed Output Current

Conditions: See **Section 37.1.1.1, Common Conditions**.

Item	Symbol	MIN.	TYP.	MAX.	Unit
Output high-level allowable current (per pin)	I_{OH}			–3	mA
Output high-level allowable current (total)[*1]	ΣI_{OH}			–48	mA
Output low-level allowable current (per pin)	I_{OL}			3	mA
Output low-level allowable current (total)[*1]	ΣI_{OL}			48	mA

Note 1. Total load current is 48 mA for the pins when everything is switched on at the same time. However, the total load current must be no greater than 12 mA for pins 38 to 53 pins on 100-pin devices.

CAUTION

This item affects the calorific value and Tj of the chip. In addition to these restrictions, take thermal design into consideration.

37.8.4 Injection Current

Conditions: See **Section 37.1.1.1, Common Conditions**.

Item		Symbol	MIN.	TYP.	MAX.	Unit
DC injection current (per pin)	Digital pin	IINJ_DIN	–2		2	mA
	Analogue pin	IINJ_AIN	–3		3	mA
DC injection current (Total)		IINJ_TOT	–50		50	mA

37.8.5 Input Capacitance

Conditions: See **Section 37.1.1.1, Common Conditions**.
As for temperature conditions, refer measurement conditions.

Item	Symbol	MIN.	TYP.	MAX.	Unit	Measuring Condition
Input capacitance	CI			10	pF	f = 1 MHz Pins not to be measured: 0 V Tj = 25°C
Input/output capacitance	CIO			10	pF	
Output capacitance	CO			10	pF	
Input capacitance for X1	CX1			20	pF	

NOTE

For analogue input pin (ADCDnIm), see the description of the equal input capacitance in related **Section 37.15, A/D Convertor Characteristics**.

37.8.6 Power Current Characteristics

Table 37.1 Power Current of eVR Product

Conditions: See **Section 37.1.1.1, Common Conditions**.

Item		Symbol	MIN.	TYP.	MAX.	Unit
VCC power current*1	Run mode	IVCCEVR			200	mA
	When BIST is executed	IVCCBEVR			200	mA
	When rewriting flash memory*2	IVCCFEVR			200	mA
AnVCC power current		IAVCC			6.5	mA
AnVREFH current		IAVREF			0.5	mA

Note 1. The MAX. value includes the operating current of peripheral devices. However, the current in A/D converter, I/O port, or on-chip pull-up/-down resistor is not included.

Note 2. This is the value of the power current at the time of rewriting code flash memory or data flash memory.

Table 37.2 Power Current of DPS Product

Conditions: See **Section 37.1.1.1, Common Conditions**.

Item		Symbol	MIN.	TYP.	MAX.	Unit
VDD power current*1	Run mode	IVDDDPS			180	mA
	When BIST is executed	IVDDBDPS			180	mA
	When rewriting flash memory*2	IVDDFDPS			155	mA
VCC power current	Run mode	IVCCDPS			20	mA
	When BIST is executed	IVCCBDPS			20	mA
	When rewriting flash memory*2	IVDDFDPS			45	mA

Note 1. The MAX. value includes the operating current of peripheral devices. However, the current in A/D converter, I/O port, or on-chip pull-up/-down resistor is not included.

Note 2. This is the value of the power current at the time of rewriting code flash memory or data flash memory.

Note 3. AnVCC and AnVREFH current are the same as those of the eVR products.

37.9 AC Characteristics

37.9.1 Power UP/Down Timing

Table 37.3 eVR Products

Conditions: See **Section 37.1.1.1, Common Conditions**.

Item	Symbol	MIN.	MAX.	Unit	Remarks
Pin reset time at low level for power on	t_{RESW1}	13		ms	*1
Pin reset time at low level for power off	t_{RESW2}	2		μs	*2
Operating mode setup time	t_{MDS}	1		ms	
Operating mode hold time	t_{MDH}	1		ms	
PLL lock-in time	t_{PLLLT}		1	ms	*3
VCC/AnVCC voltage ramp	t_{VS1}	0.02	500	V/ms	

Note 1. t_{RESW1} is the time over which assertion of the reset signal is required to continue until the supply of internal clock signals becomes stable after all power supplies have been turned on. Release the pin reset after the periods of tRESW1 and tOSC + tPLLLT have elapsed. VCC and EVCC should be supplied from the same source.
No restriction applies to potential differences between the levels of the VCC/EVCC supplies, the AnVCC supply during power up.

Note 2. t_{RESW2} is the time over which assertion of the reset signal is required until either of the power voltages has dropped below the lower limit.

Note 3. t_{PLLLT} is the time the PLL requires to lock in after MOSC oscillation has become stable.

Note 4. The states of I/O pins are not reset during the noise cancellation interval (max. 1.2 μs) of the reset signal following its assertion while power is being turned off. During that time, do not allow any input of mid-range potential to a pin or the contention of output data.

Note 5. Disconnecting the power during the programming or erasure of flash memory is prohibited.

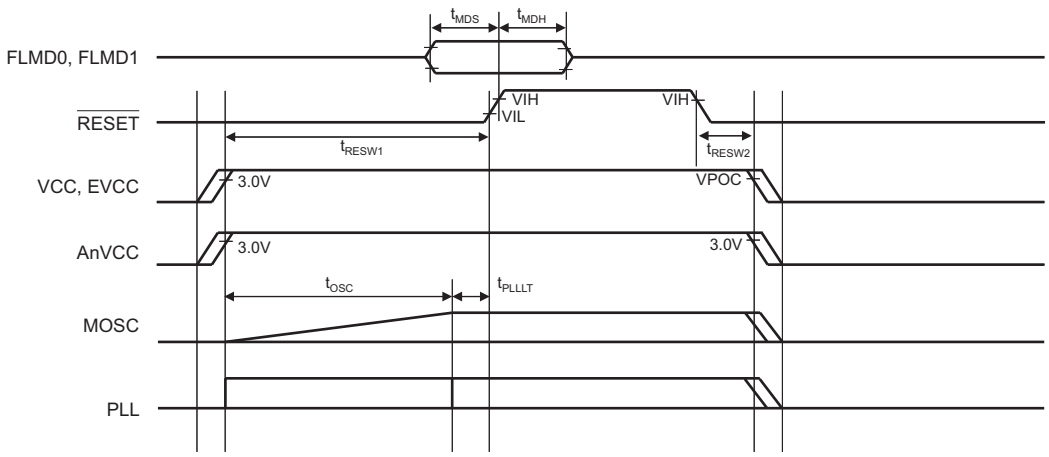

Note: t_{OSC}: OSC oscillation stabilization time

Table 37.4 DPS Products

Conditions: See **Section 37.1.1.1, Common Conditions**.

Item	Symbol	MIN.	MAX.	Unit	Remarks
Pin reset time at low level for power on	t_{RESW1}	13		ms	*1
Pin reset time at low level for power off	t_{RESW2}	2		μs	*2
Operating mode setup time	t_{MDS}	1		ms	
Operating mode hold time	t_{MDH}	1		ms	
PLL lock-in time	t_{PLLLT}		1	ms	*3
VCC/AnVCC voltage ramp	t_{VS1}	0.02	500	V/ms	
VDD voltage ramp	t_{VS2}	2	500	V/ms	

Note 1. t_{RESW1} is the time over which assertion of the reset signal is required to continue until the supply of internal clock signals becomes stable after all power supplies have been turned on. Release the pin reset after the periods of tRESW1 and tOSC + tPLLLT has elapsed. VCC and EVCC should be supplied from the same source.
No restriction applies to potential differences between the levels of the VCC/EVCC supplies and the AnVCC supply, and the VDD supply during power up.

Note 2. t_{RESW2} is the time over which assertion of the reset signal is required until either of the power voltages has dropped below the lower limit.

Note 3. t_{PLLLT} is the time the PLL requires to lock in after MOSC oscillation has become stable.

Note 4. The states of I/O pins are not reset during the noise cancellation interval (max. 1.2 μs) of the reset signal following its assertion while power is being turned off. During that time, do not allow any input of mid-range potential to a pin or the contention of output data.

Note 5. Disconnecting the power during the programming or erasure of flash memory is prohibited.

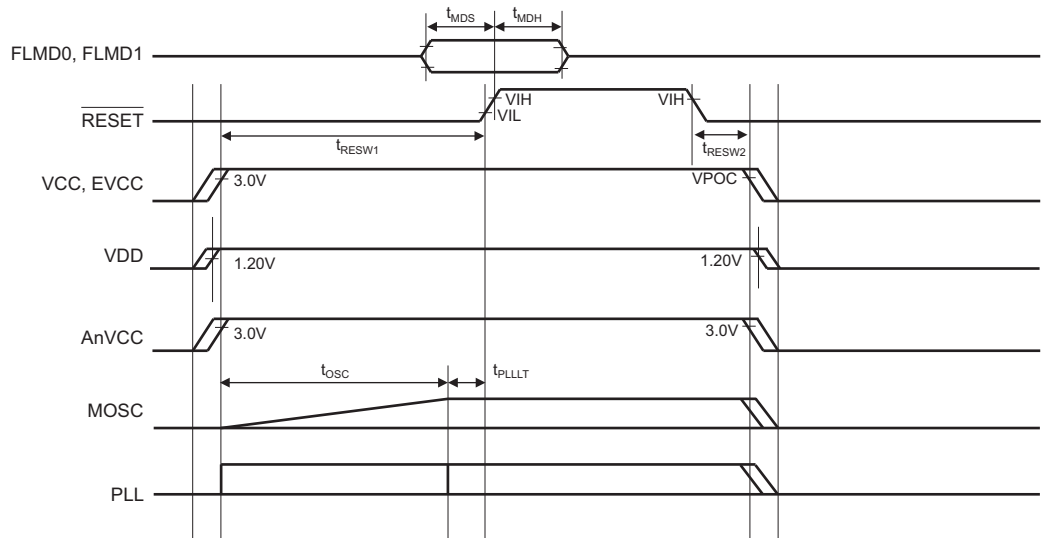

Note: t_{OSC}: OSC oscillation stabilization time

37.9.2 Driving Ability

Conditions: See **Section 37.1.1.1, Common Conditions**.

Item	Symbol	Condition	MIN.	TYP.	MAX.	Unit
Output frequency		High-speed mode			20	MHz
		Medium-speed mode			14	MHz
		Low-speed mode			4	MHz
Output rising/falling time		High-speed mode			10	ns
		Medium-speed mode			20	ns
		Low-speed mode			50	ns

37.9.3 Clock Timing

Conditions: See **Section 37.1.1.1, Common Conditions**.
The output pins are in high-speed mode.

Item	Symbol	Condition	MIN.	TYP.	MAX.	Unit
EXTCLKnO output cycle	t_{CYK}		0.05 (20 MHz)		4 (250 KHz)	μs
EXTCLKnO high level width	t_{WKH}	M: 1 or an even value*1	$t_{CYK}/2 - 12$			ns
		M: An odd value (M ≥ 3)*1	$t_{CYK} \times (M + 1)/2M - 12$			ns
EXTCLKnO low level width	t_{WKL}	M: 1 or an even value*1	$t_{CYK}/2 - 12$			ns
		M: An odd value (M ≥ 3)*1	$t_{CYK} \times (M + 1)/2M - 12$			ns
EXTCLKnO rising time	t_{KR}				10	ns
EXTCLKnO falling time	t_{KF}				10	ns

Note: n = 0, 1

Note 1. M represents the value in the CLKDnDIV register.

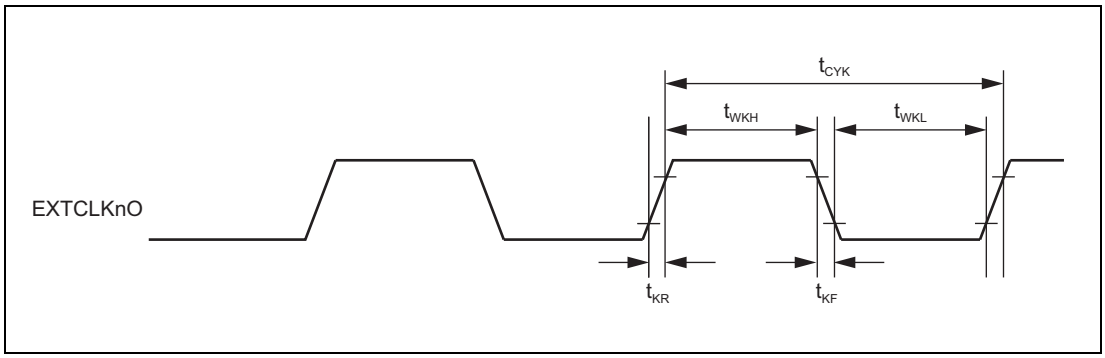

Figure 37.1 Clock Output Timing

37.9.4 Control Signal Timing

37.9.4.1 Reset

Conditions: See **Section 37.1.1.1, Common Conditions**.

Item	Symbol	Condition	MIN.	TYP.	MAX.	Unit
$\overline{\text{RESET}}$ input low level width	t_{WRSL}	Other than power-on	1.5	—	—	μs
$\overline{\text{DCUTRST}}$ input low level width	t_{WTRL}		1.5	—	—	μs

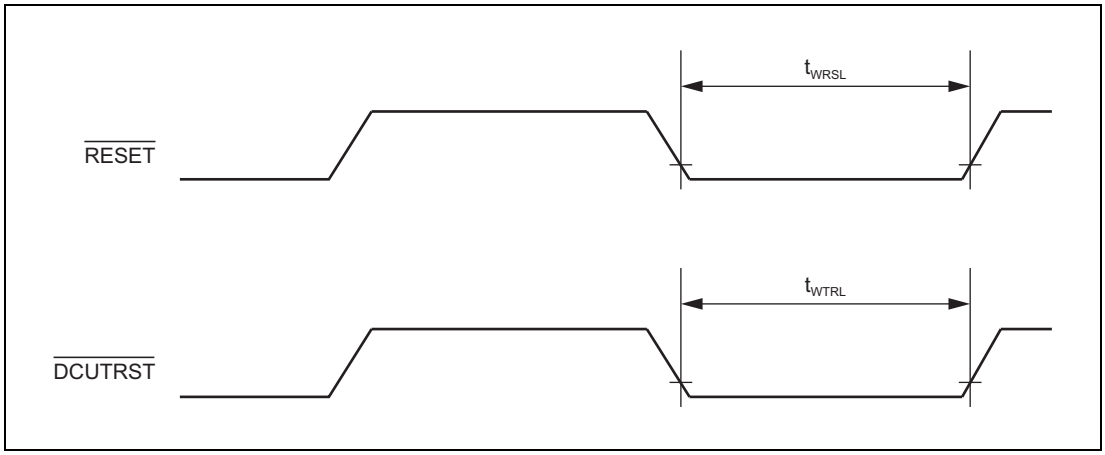

37.9.4.2 Interrupts/ADTRG

Conditions: See **Section 37.1.1.1, Common Conditions**.

Item	Symbol	Condition	MIN.	TYP.	MAX.	Unit
NMI input high level width	t_{WNIH}	Digital filter	k × Tsamp + 20*1			ns
NMI input low level width	t_{WNIL}	Digital filter	k × Tsamp + 20*1			ns
INTPn input high level width	t_{WITH}	Digital filter	k × Tsamp + 20*1			ns
		Analog filter, n = 7, 8	600			ns
INTPn input low level width	t_{WITL}	Digital filter	k × Tsamp + 20*1			ns
		Analog filter, n = 7, 8	600			ns
ADCDnTRGm input high level width	t_{WNIH}	Digital filter, n = 0,1, m = 0,1	k × Tsamp + 20*1			ns
ADCDnTRGm input low level width	t_{WNIL}	Digital filter, n = 0, 1, m = 0, 1	k × Tsamp + 20*1			ns

Note 1. k is the number of samples taken by the digital noise filter for the input.
Tsamp is the sampling interval of the digital noise filter for the input.

CAUTION

The specifications above indicate the pulse width to be always detected as an effective edge. Even when a value smaller pulse width than the above is input, such value may be detected as an effective edge.

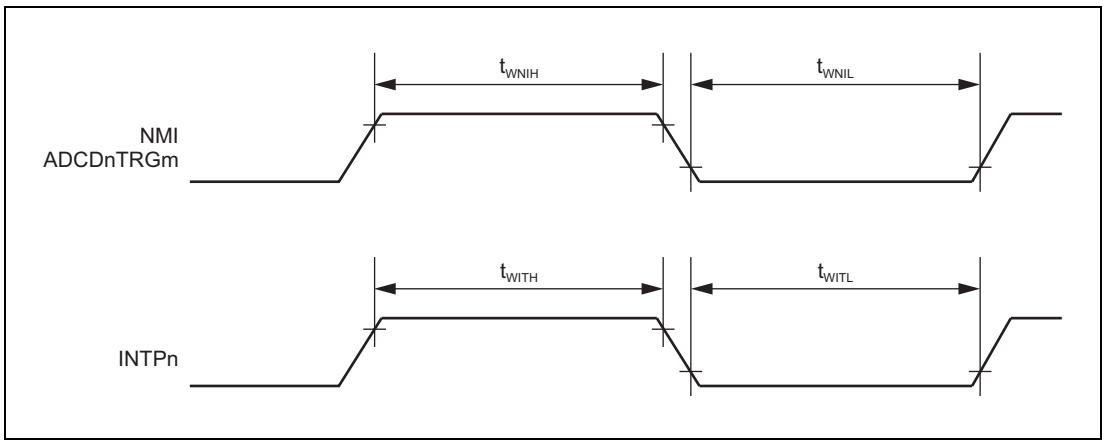

37.9.4.3 Mode

Conditions: See **Section 37.1.1.1, Common Conditions**.

Item	Symbol	Condition	MIN.	TYP.	MAX.	Unit
FLMD0,1 input high level width	t_{WFMDH}		600			ns
FLMD0,1 input low level width	t_{WFMDL}		600			ns

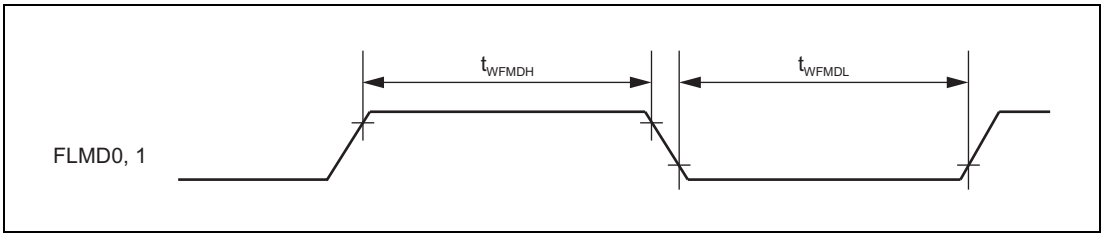

37.9.5 Timer Timing

Conditions: See **Section 37.1.1.1, Common Conditions**.

Item	Symbol	Condition	MIN.	TYP.	MAX.	Unit
TAUDnIm input high/low level width (n = 3, m = 0 to 15)	t_{WTDIH}/ t_{WTDIL}		k × Tsamp + 20[*1]			ns
TAUJnIm input high/low level width (n = 3, m = 0 to 3)	t_{WTJIH}/ t_{WTJIL}		k × Tsamp + 20[*1]			ns
ENCAnTINm input high/low level width (n = 0, 1; m = 0, 1)	t_{WTDIH}/ t_{WTDIL}		k × Tsamp + 20[*1]			ns
ENCAnIm input high/low level width (n = 0, 1; m = 0, 1)	t_{WENIH}/ t_{WENIL}		k × Tsamp + 20[*1]			ns
TAPAnESO input high/low level width (n = 0, 1)	t_{WESIH}/ t_{WESIL}		600			ns

Note 1. k is the number of samples taken by the digital noise filter for the input.
Tsamp is the sampling interval of the digital noise filter for the input.

37.9.6 CSI Timing

37.9.6.1 CSIG Timing

Conditions: See **Section 37.1.1.1, Common Conditions**.
The output pins are in high-speed mode.

Table 37.5 CSIG Timing (Master Mode)

Item	Symbol	Condition	MIN.	TYP.	MAX.	Unit
Macro operation clock cycle time	t_{KCYGn}		12.5 (max. 80 MHz)			ns
CSIGnSC cycle time	t_{KCYMGn}		125			ns
CSIGnSC high level width	t_{KWHMGn}		t_{KCYMGn} /2 - 12			ns
CSIGnSC low level width	t_{KWLMGn}		t_{KCYMGn} /2 - 12			ns
CSIGnSI setup time (vs. CSIGnSC)	t_{SSIMGn}		30			ns
CSIGnSI hold time (vs. CSIGnSC)	t_{HSIMGn}		0			ns
CSIGnSO output delay time (vs. CSIGnSC)	t_{DSOMGn}				7	ns
CSIGnRYI setup time (vs. CSIGnSC)	t_{SRYIGn}	CSIGnCTL1.CSIGnSIT = x CSIGnCTL1.CSIGnHSE = 1	2 × t_{KCYGn} + 25			ns

Table 37.6 CSIG Timing (Slave Mode)

Item	Symbol	Condition	MIN.	TYP.	MAX.	Unit
Macro operation clock cycle time	t_{KCYGn}		12.5 (max. 80 MHz)			ns
CSIGnSC cycle time	t_{KCYSGn}		150			ns
CSIGnSC high level width	t_{KWHSGn}		t_{KCYSGn} /2 - 12			ns
CSIGnSC low level width	t_{KWLSGn}		t_{KCYSGn} /2 - 12			ns
CSIGnSI setup time (vs. CSIGnSC)	t_{SSISGn}		20			ns
CSIGnSI hold time (vs. CSIGnSC)	t_{HSISGn}		t_{KCYGn} + 5			ns
CSIGnSO output delay time (vs. CSIGnSC)	t_{DSOSGn}				30	ns
CSIGnRYO output delay time (vs. CSIGnSC)	t_{SRYOGn}				38	ns

37.9.6.2 CSIH Timing

Conditions: See **Section 37.1.1.1, Common Conditions**.
The output pins are in high-speed mode.

Table 37.7 CSIH Timing (Master Mode)

Item	Symbol	Condition	MIN.	TYP.	MAX.	Unit
Macro Operation clock cycle time	t_{KCYHn}		12.5 (max. 80 MHz)			ns
CSIHnSC cycle time	t_{KCYMHn}		100			ns
CSIHnSC high level width	t_{KWHMHn}		t_{KCYMHn} /2 - 12			ns
CSIHnSC low level width	t_{KWLMHn}		t_{KCYMHn} /2 - 12			ns
CSIHnSI setup time (vs. CSIHnSC)	t_{SSIMHn}		25			ns
CSIHnSI hold time (vs. CSIHnSC)	t_{HSIMHn}		0			ns
CSIHnSO output delay (vs. CSIHnSC)	t_{DSOMHn}				7	ns
CSIHnRYI setup time (vs. CSIHnSC)	t_{SRYIHn}	CSIHnCTL1.CSIHnSIT = x CSIHnCTL1.CSIHnHSE = 1	2 × t_{KCYMHn} + 25			ns
CSIHnCSS0 to CSIHnCSS7 inactive level width	$t_{WSCSBHn}$		CSIDLE × t_{KCYMHn} – 20			ns
CSIHnCSS0 to CSIHnCSS7 setup time (vs. CSIHnSC)	$t_{SSCSBHn0}$	CSIHnCFGx.CSIHnDAPx = 0	CSSETUP × t_{KCYMHn} – 10			ns
	$t_{SSCSBHn1}$	CSIHnCFGx.CSIHnDAPx = 1	(CSSETUP + 0.5) × t_{KCYMHn} – 10			ns
CSIHnCSS0 to CSIHnCSS7 hold time (vs. CSIHnSC)	$t_{HSCSBHn0}$	CSIHnCTL1.CSIHnSIT = 0	CSHOLD × t_{KCYMHn} – 10			ns
	$t_{HSCSBHn1}$	CSIHnCTL1.CSIHnSIT = 1	(CSHOLD + 0.5) × t_{KCYMHn} – 10			ns

Note: CSSETUP: The values set in CSIHnCFGx.CSIHnSPx[3:0]
CSHOLD: The values set in CSIHnCFGx.CSIHnHDx[3:0]
CSIDLE: The value set in CSIHnCFGx.CSIHnIDLx

Table 37.8 CSIH Timing (Slave Mode)

Item	Symbol	Condition	MIN.	TYP.	MAX.	Unit
Macro Operation clock cycle time	t_{KCYHn}		12.5 (max. 80 MHz)			ns
CSIHnSC cycle time	t_{KCYSHn}		150			ns
CSIHnSC high level width	t_{KWHSHn}		t_{KCYSHn} /2 - 12			ns
CSIHnSC low level width	t_{KWLSHn}		t_{KCYSHn} /2 - 12			ns
CSIHnSI setup time (vs. CSIHnSC)	t_{SSISHn}		20			ns
CSIHnSI hold time (vs. CSIHnSC)	t_{HSISHn}		t_{KCYHn} + 5			ns
CSIHnSO output delay time (vs. CSIHnSC)	t_{DSOSHn}				30	ns
CSIHnRYO output delay time (vs. CSIHnSC)	t_{SRYOHn}				38	ns
CSIHnSSI setup time (vs. CSIHnSC)	$t_{SSSISHn}$		t_{KCYSHn} /2 - 5			ns
CSIHnSSI hold time (vs. CSIHnSC)	$t_{HSSISHn}$		t_{KCYHn} + 30			ns

37.9.6.3 CSIG/CSIH Timing Charts

(1) SCKO/SI/SO

Master Mode:

- CSIG (CSIGnCTL1: CSIGnCKR/CSIGnCFG0: CSIGnDAP = 0/0 or 1/1)
- CSIH (CSIHnCFGx: CSIHnCKPx/CSIHnCFGx: CSIHnDAPx = 0/0 or 1/1)

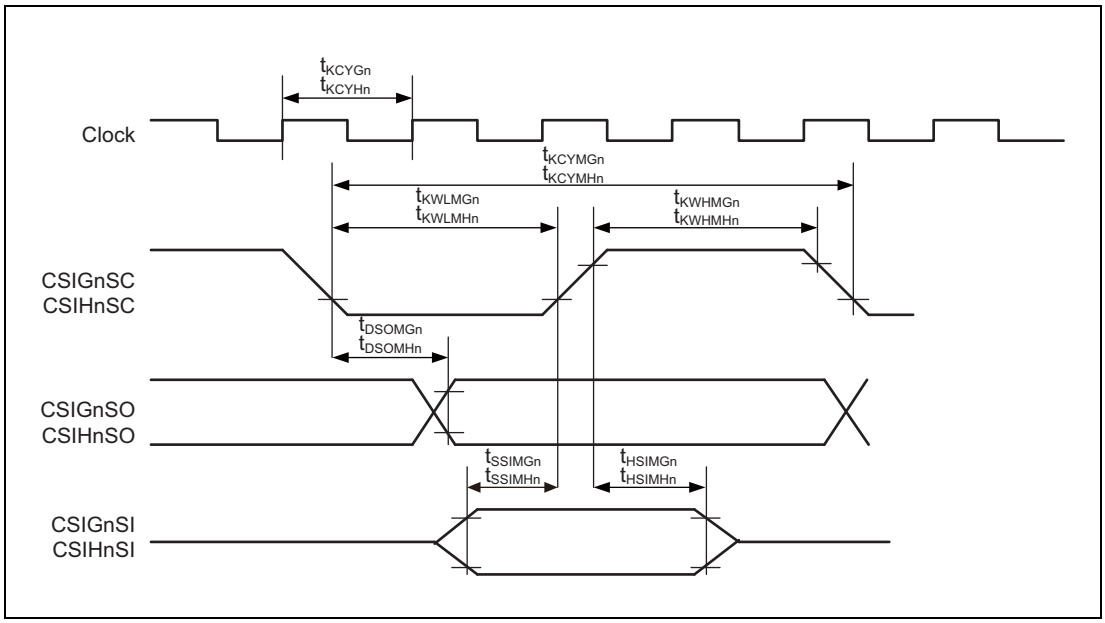

- CSIG (CSIGnCTL1: CSIGnCKR/CSIGnCFG0: CSIGnDAP = 1/0 or 0/1)
- CSIH (CSIHnCFGx: CSIHnCKPx/CSIHnCFGx: CSIHnDAPx = 1/0 or 0/1)

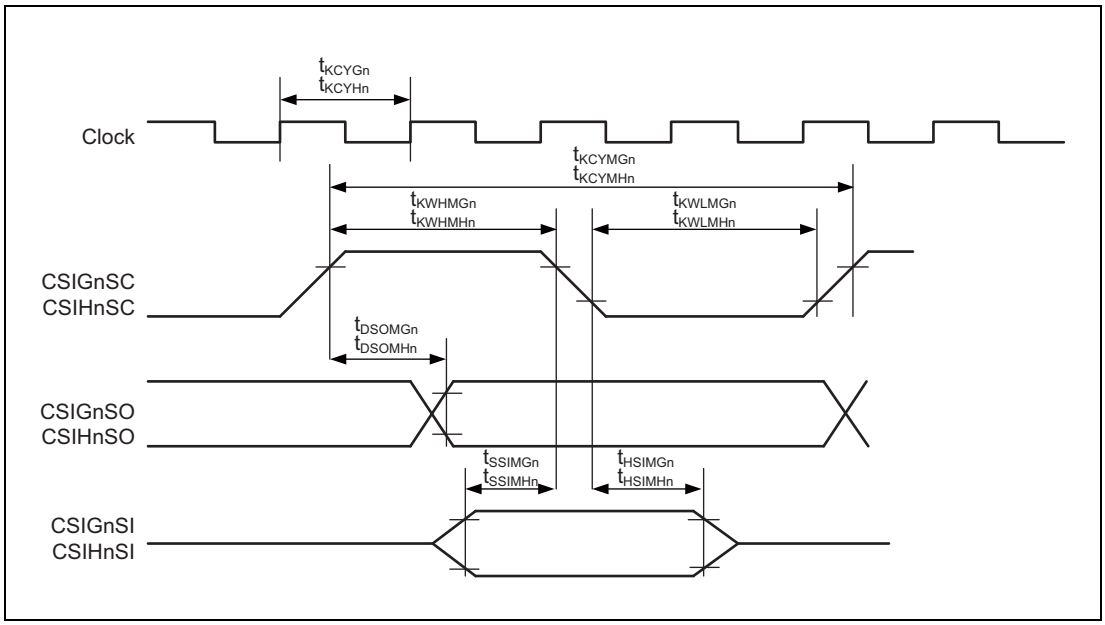

(2) RYI

- CSIG: Only master mode (CSIGnCTL1: CSIGnHSE = 1, CSIGnCTL1: CSIGnSIT = 0)
- CSIH: Only master mode (CSIHnCTL1: CSIHnHSE = 1, CSIHnCTL1: CSIHnSIT = 0)

  – CSIG (CSIGnCTL1: CSIGnCKR = 0)
  – CSIH (CSIHnCFGx: CSIHnCKPx = 0)

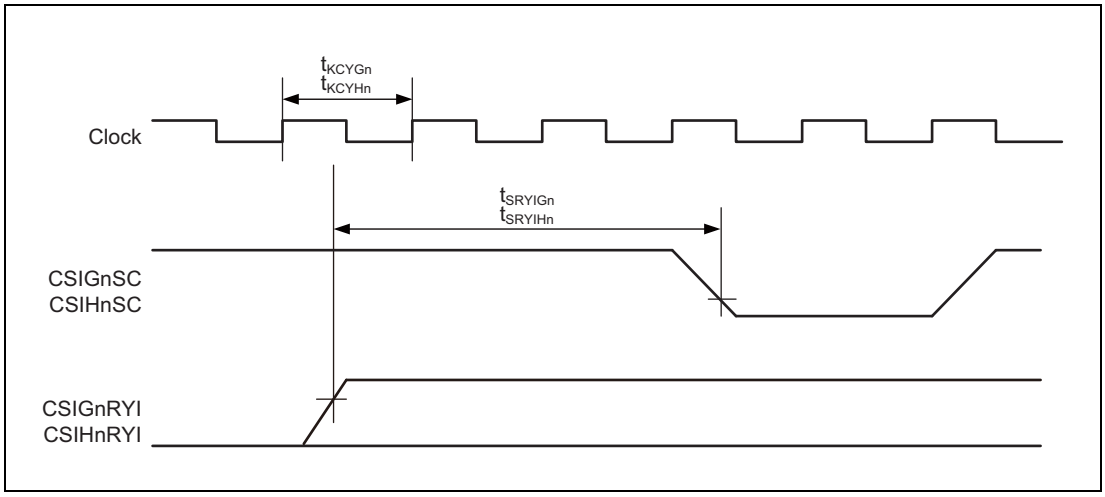

  – CSIG (CSIGnCTL1: CSIGnCKR = 1)
  – CSIH (CSIHnCFGx: CSIHnCKPx = 1)

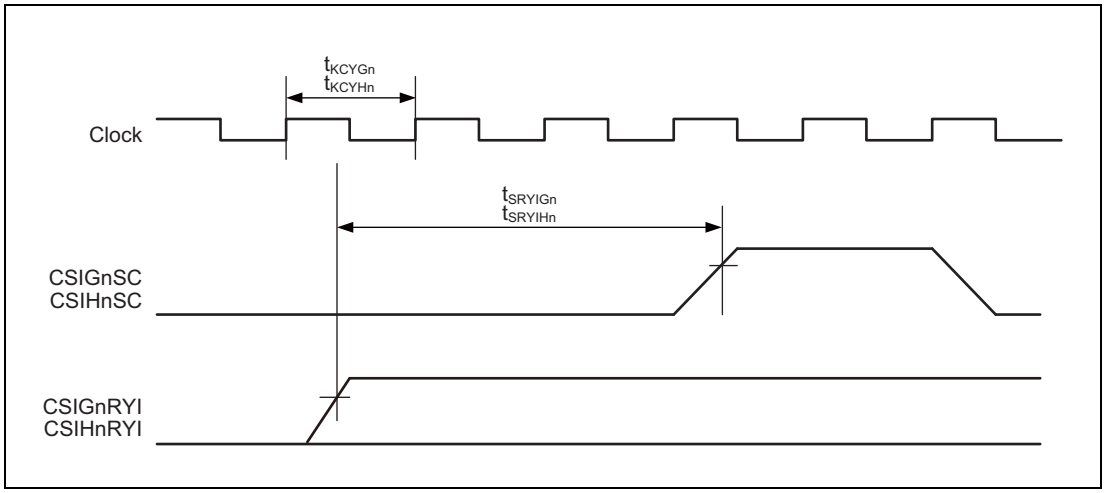

(3) CSSn

Only Master Mode (Inactive Level Width):

- CSIHnCFGx: CSIHnCKPx = 0, CSIHnCFGx: CSIHnDAPx = 0

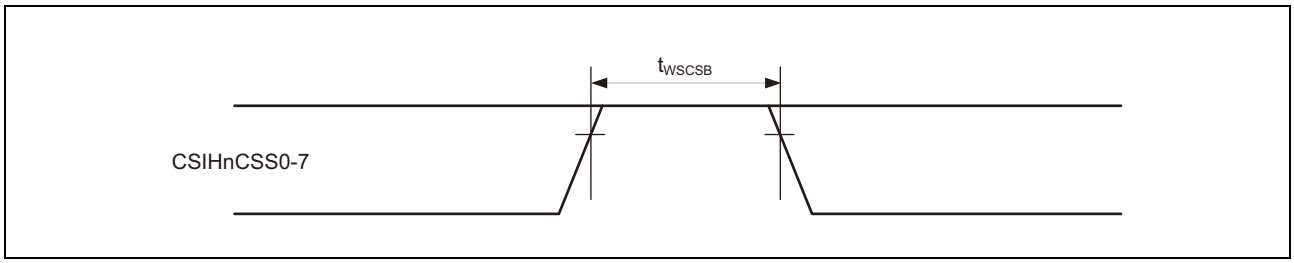

Only Master Mode (Setup Time):

- CSIHnCFGx: CSIHnCKPx = 0, CSIHnCFGx: CSIHnDAPx = 0

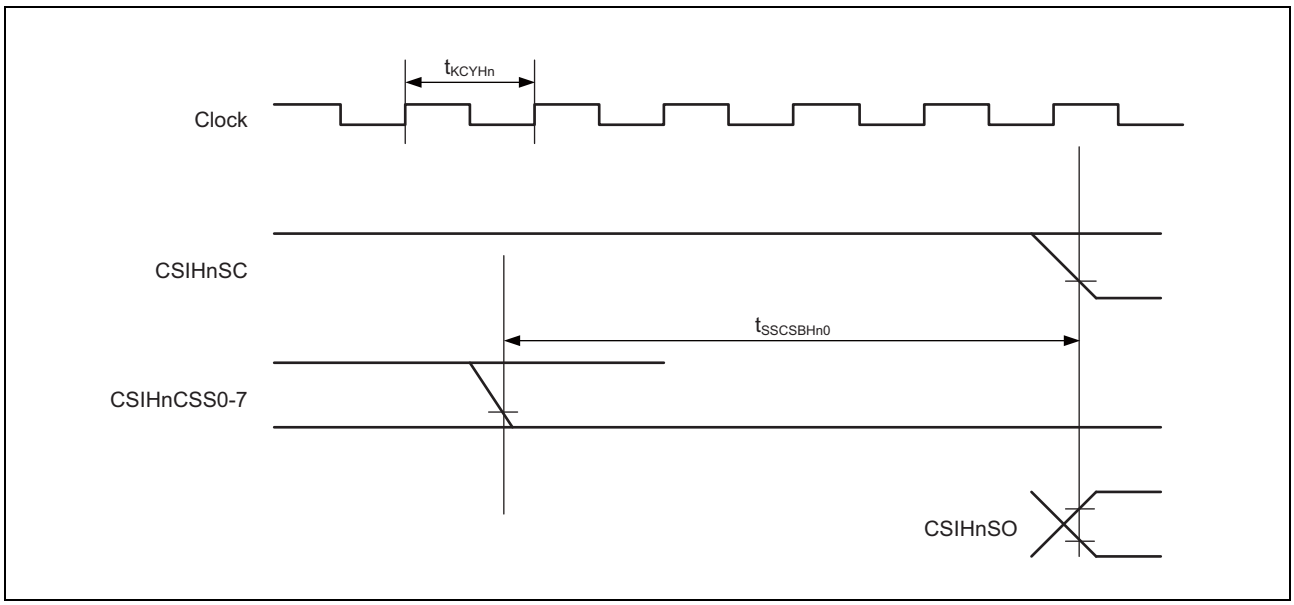

- CSIHnCFGx: CSIHnCKPx = 0, CSIHnCFGx: CSIHnDAPx = 1

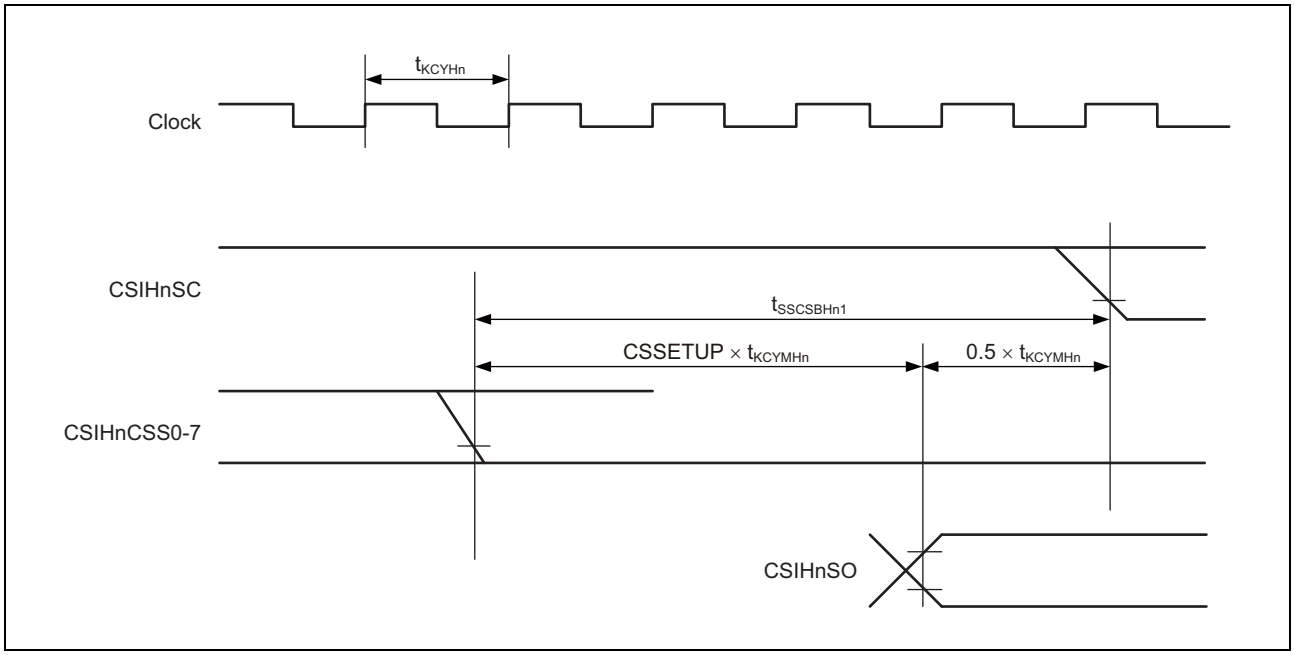

Only Master Mode (Hold Time):

- CSIHnCTL1: CSIHnSIT = 0, CSIHnCFGx: CSIHnCKPx = 0, CSIHnCFGx: CSIHnDAPx = 0

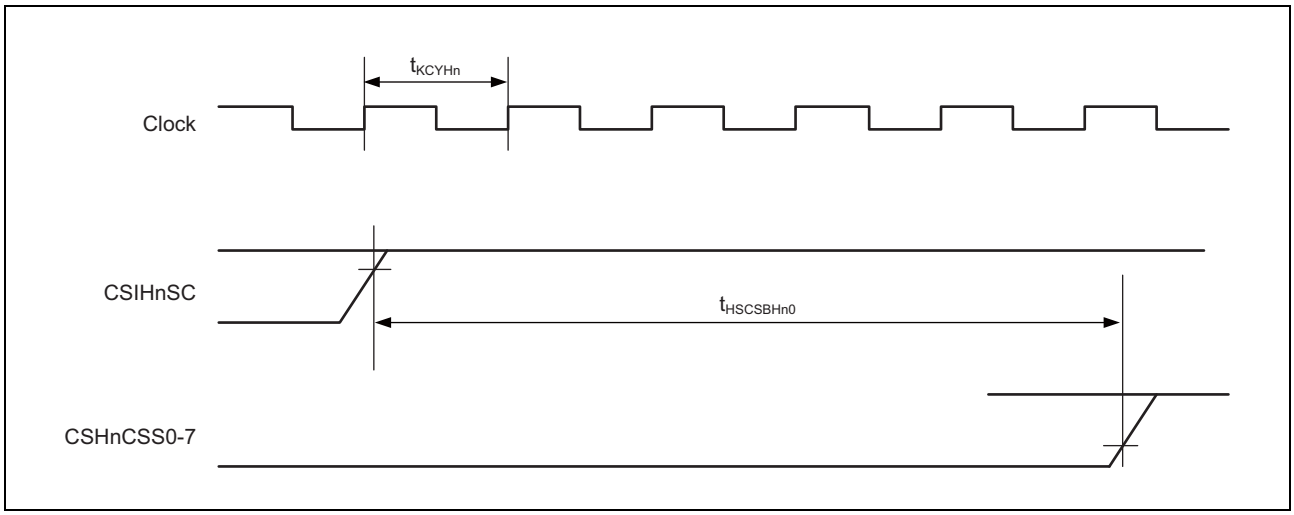

- CSIHnCTL1: CSIHnSIT = 1, CSIHnCFGx: CSIHnCKPx = 0, CSIHnCFGx: CSIHnDAPx = 0

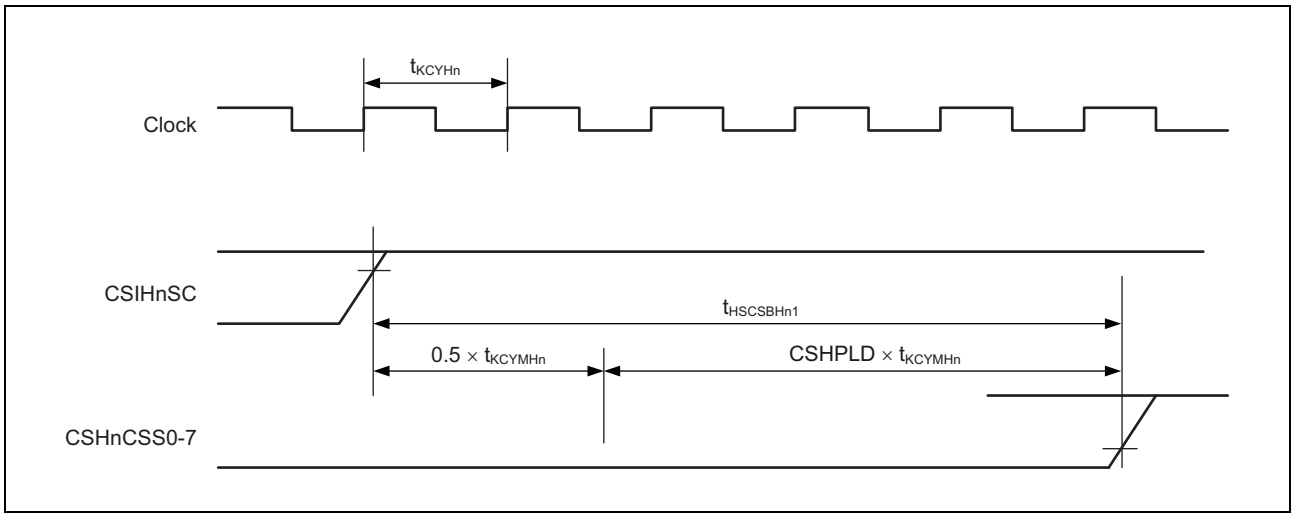

(4) SCKO/SI/SO

Slave Mode:

- CSIG (CSIGnCTL1: CSIGnCKR/CSIGnCFG0: CSIGnDAP = 0/0 or 1/1)
- CSIH (CSIHnCFGx: CSIHnCKPx/CSIHnCFGx: CSIHnDAPx = 0/0 or 1/1)

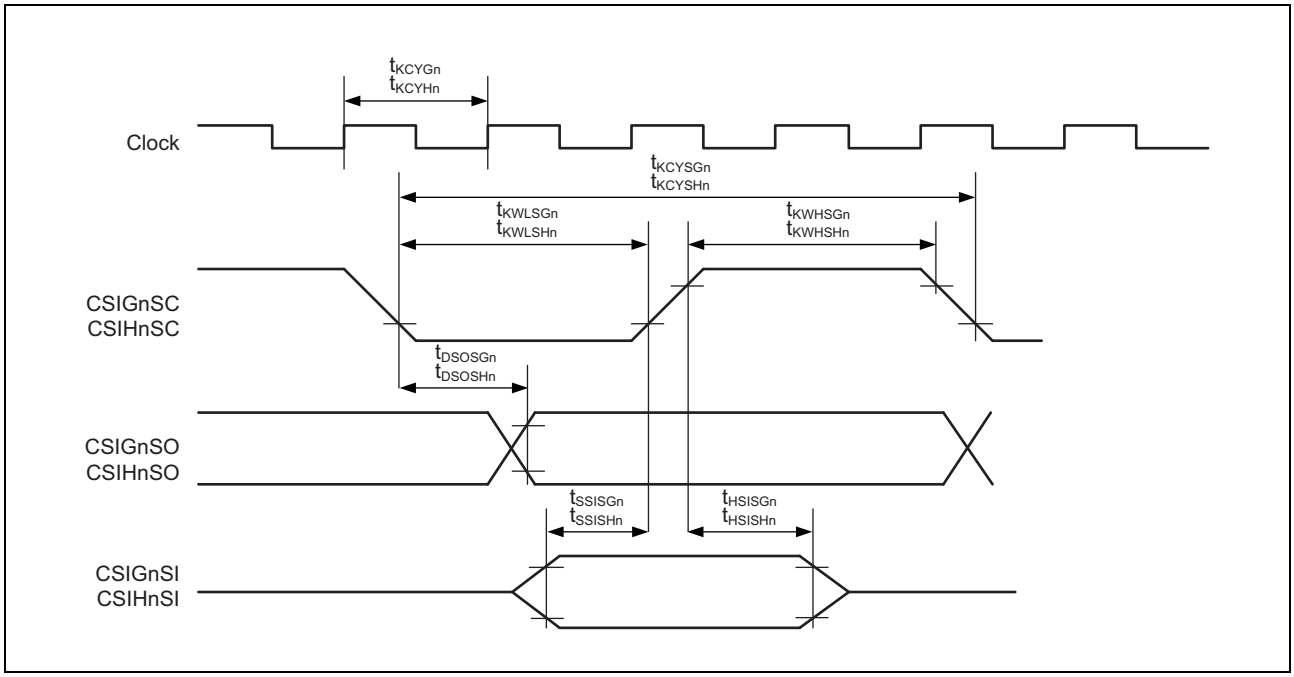

- CSIG (CSIGnCTL1: CSIGnCKR/CSIGnCFG0: CSIGnDAP = 1/0 or 0/1)
- CSIH (CSIHnCFGx: CSIHnCKPx/CSIHnCFGx: CSIHnDAPx = 1/0 or 0/1)

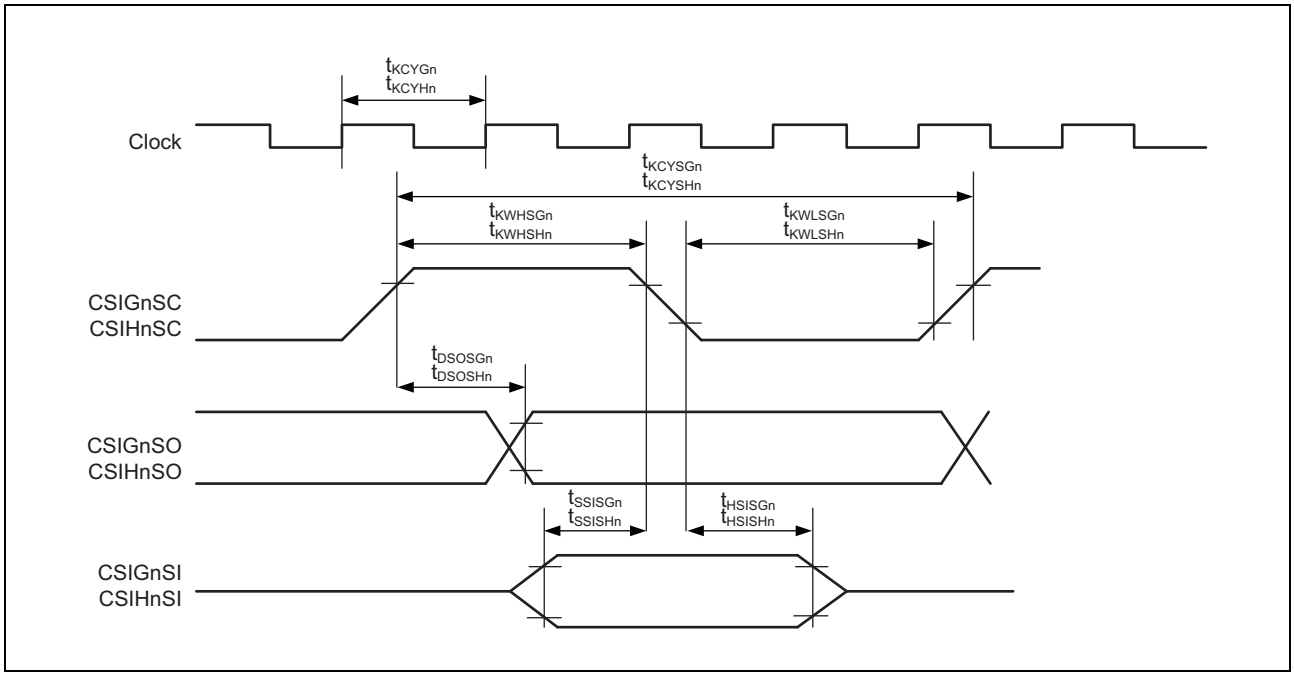

(5) RYO

- CSIG (CSIGnCTL1: CSIGnCKR/CSIGnCFG0: CSIGnDAP0 = 0/0)
- CSIH (CSIHnCFGx: CSIHnCKPx/CSIHnCFGx: CSIHnDAPx = 0/0)

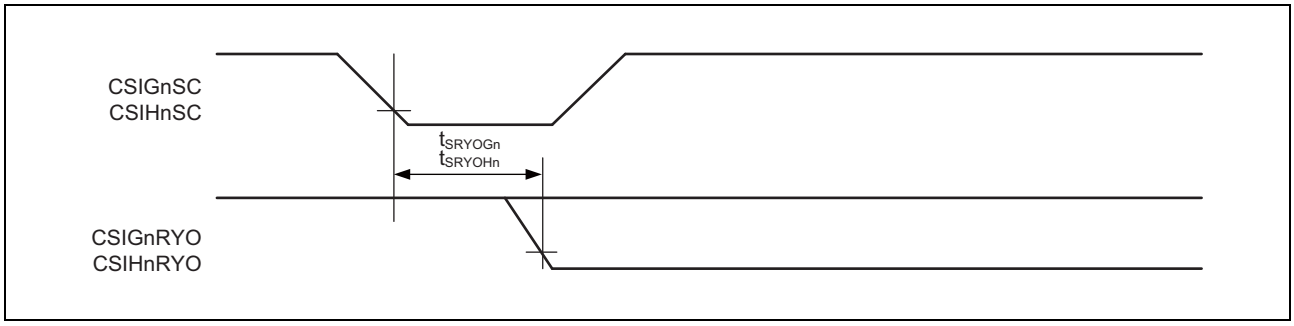

- CSIG (CSIGnCTL1: CSIGnCKR/CSIGnCFG0: CSIGnDAP = 0/1)
- CSIH (CSIHnCFGx: CSIHnCKPx/CSIHnCFGx: CSIHnDAPx = 0/1)

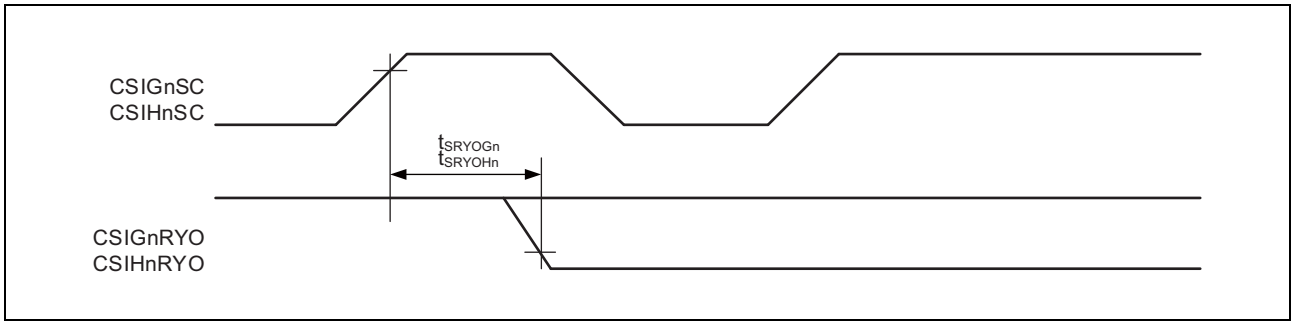

- CCSIG (CSIGnCTL1: CSIGnCKR/CSIGnCFG0: CSIGnDAP = 1/0)
- CSIH (CSIHnCFGx: CSIHnCKPx/CSIHnCFGx: CSIHnDAPx = 1/0

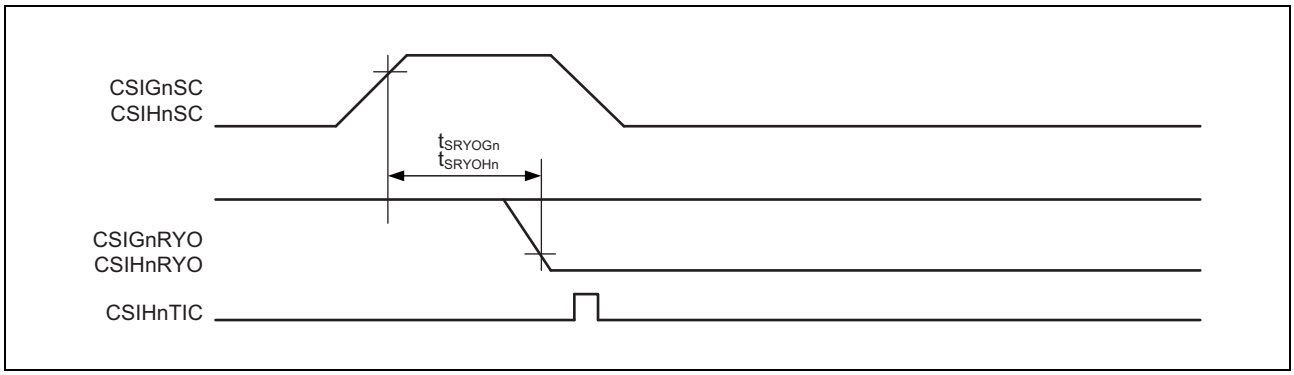

- CSIG (CSIGnCTL1: CSIGnCKR/CSIGnCFG0: CSIGnDAP = 1/1)
- CSIH (CSIHnCFGx: CSIHnCKPx/CSIHnCFGx: CSIHnDAPx = 1/1)

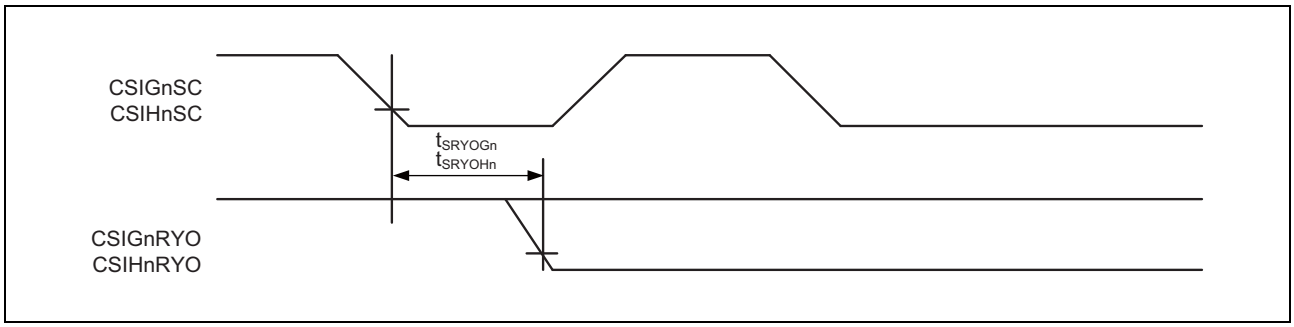

(6) SSI

Slave Mode:

- CSIH (CSIHnCTL1: CSIHnSSE=1, CSIHnCFGx: CSIHnCKPx/CSIHnCFGx: CSIHnDAPx = 0/0 or 1/1)

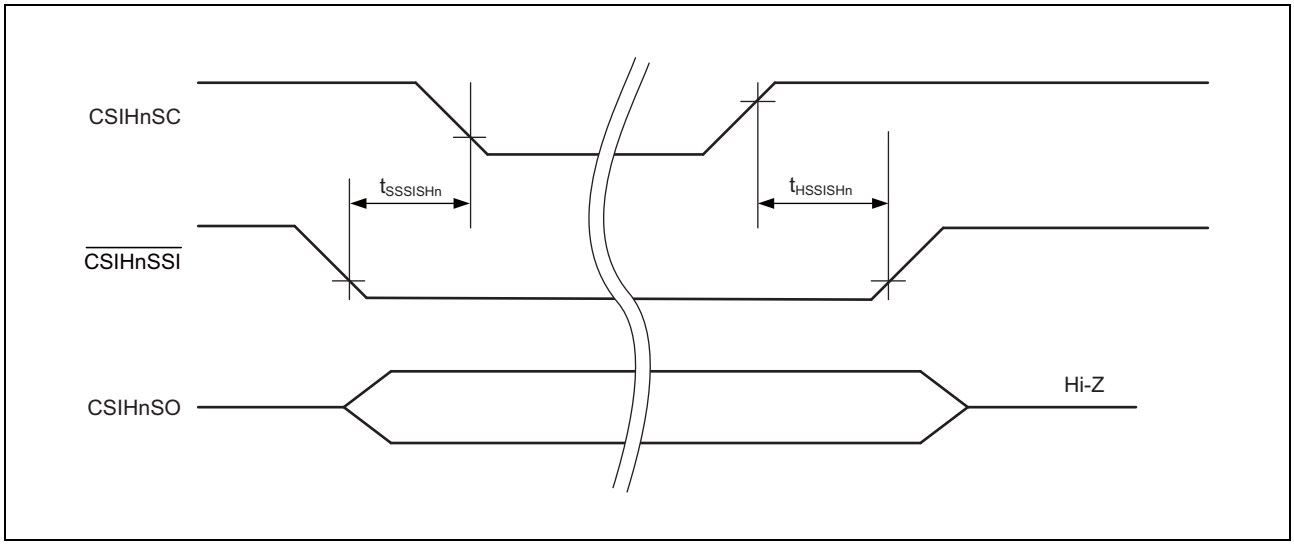

- CSIH (CSIHnCTL1: CSIHnSSE=1, CSIHnCFGx: CSIHnCKPx/CSIHnCFGx: CSIHnDAPx = 1/0 or 0/1)

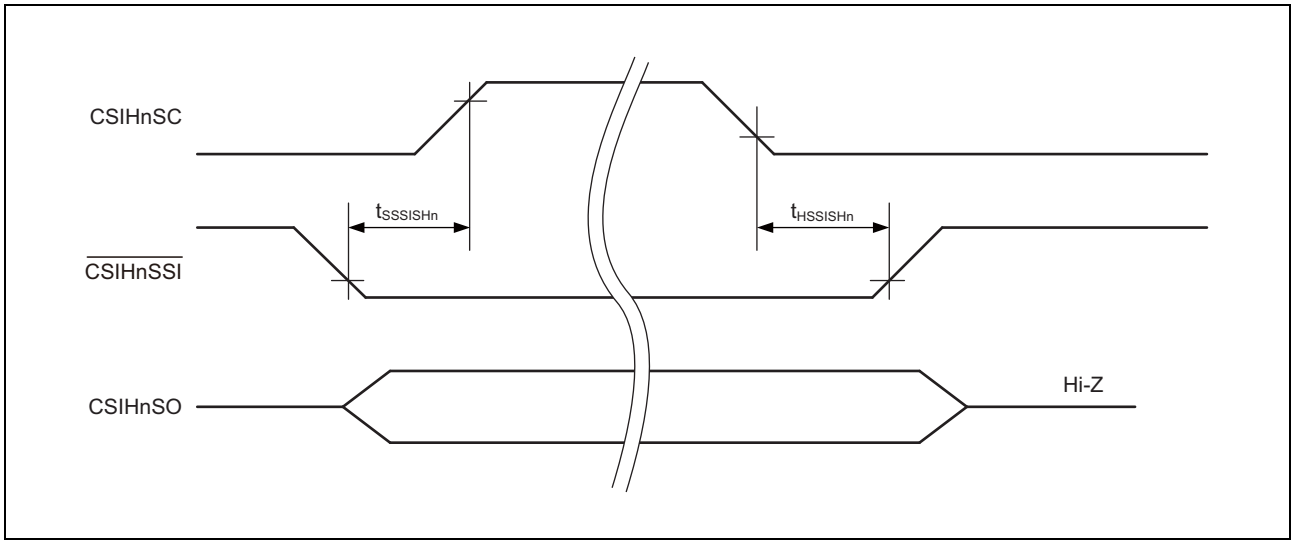

37.9.7 SCI3 Timing

Conditions: See **Section 37.1.1.1, Common Conditions**.
The specification in this section is only applicable for high speed mode.

Table 37.9 SCI3 Timing (Master Mode)

Item	Symbol	Condition	MIN.	TYP.	MAX.	Unit
Output cycle time	t_{Scyc}	Asynchronous	16 × t_{PCLK}			ns
		Clock synchronous	16 × t_{PCLK}			ns
Output clock pulse width	t_{SCKW}		0.4 × t_{Scyc}		0.6 × t_{Scyc}	ns
Transmit data delay time	t_{TXD}				40	ns
Receive data setup time	t_{RXS}	Clock synchronous	2 × t_{PCLK}			ns
Receive data hold time	t_{RXH}	Clock synchronous	2 × t_{PCLK}			ns

Note: t_{PCLK} is the operating clock of SCI3.

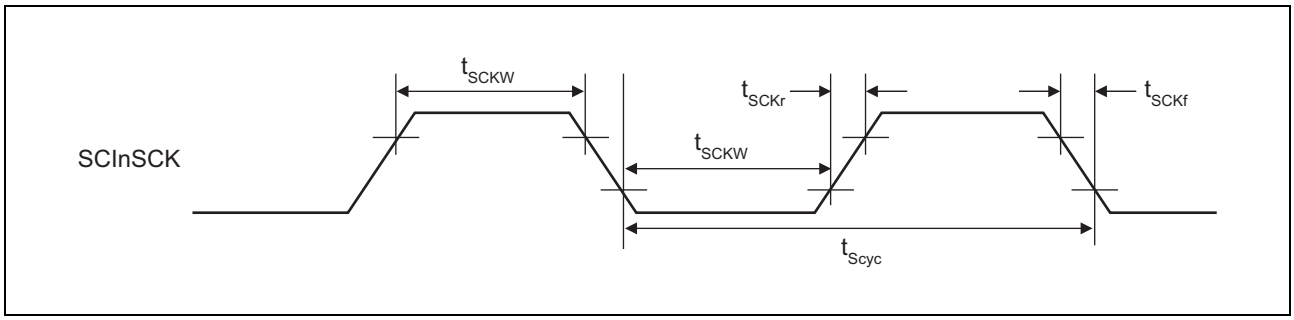

Figure 37.2 SCI Clock Input/Output Timing

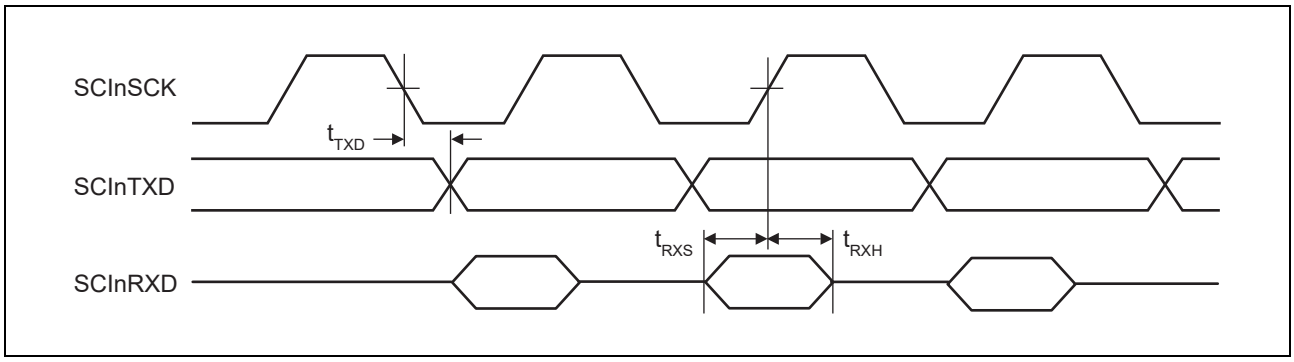

Figure 37.3 SCI Input/Output Timing, Clock Synchronous Mode (in Master Mode)

Table 37.10 SCI3 Timing (Slave Mode)

Item	Symbol	MIN.	TYP.	MAX.	Unit
Input cycle time	t_{Scyc}	12 × t_{PCLK}			ns
Input clock pulse width	t_{SCKW}	0.4 × t_{Scyc}		0.6 × t_{Scyc}	ns
Transmit data delay time*1	t_{TXD}	2 × t_{PCLK}		50 + 3 × t_{PCLK}	ns
Input clock rising time	t_{SCKr}			20	ns
Input clock falling time	t_{SCKf}			20	ns
Receive data setup time	t_{RXS}	2 × t_{PCLK}			ns
Receive data hold time	t_{RXH}	2 × t_{PCLK}			ns

Note 1. This does not apply to transmission of Data 0 (the first bit) which is transferred not in continuous transfer mode.
Transmission of Data 0 (the first bit) which is transferred not in continuous transfer mode starts when TDRE becomes 0.

Note: t_{PCLK} is the operating clock of SCI3.

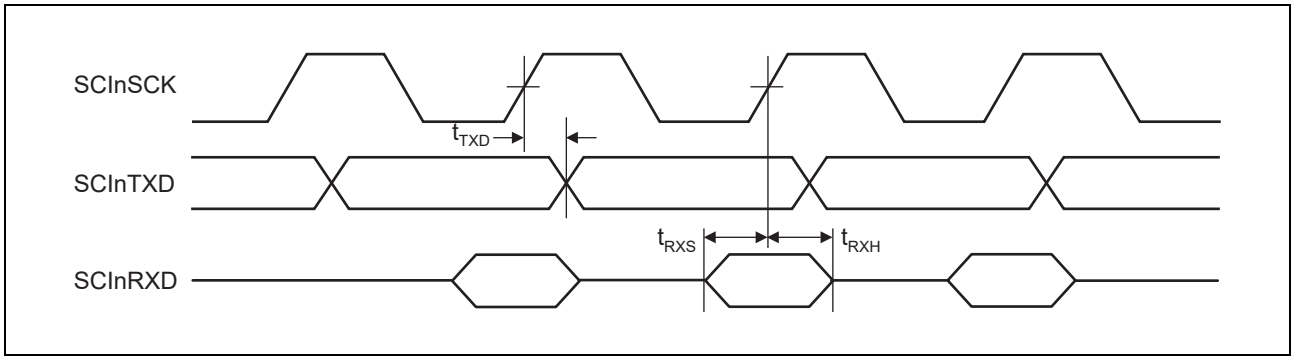

Figure 37.4 SCI Input/Output Timing, Clock Synchronous Mode (in Slave Mode)

37.9.8 RS-CAN Timing

Conditions: See **Section 37.1.1.1, Common Conditions**.
The specification in this section is only applicable for high speed mode.

Item	Symbol	Condition	MIN.	TYP.	MAX.	Unit
Transfer rate					1	Mbps
CAN node delay time	t_{NODE}				100	ns

Internal delay time (t_{NODE}) = Internal transmit delay time (t_{OUTPUT}) + Internal receive delay time (t_{INPUT})

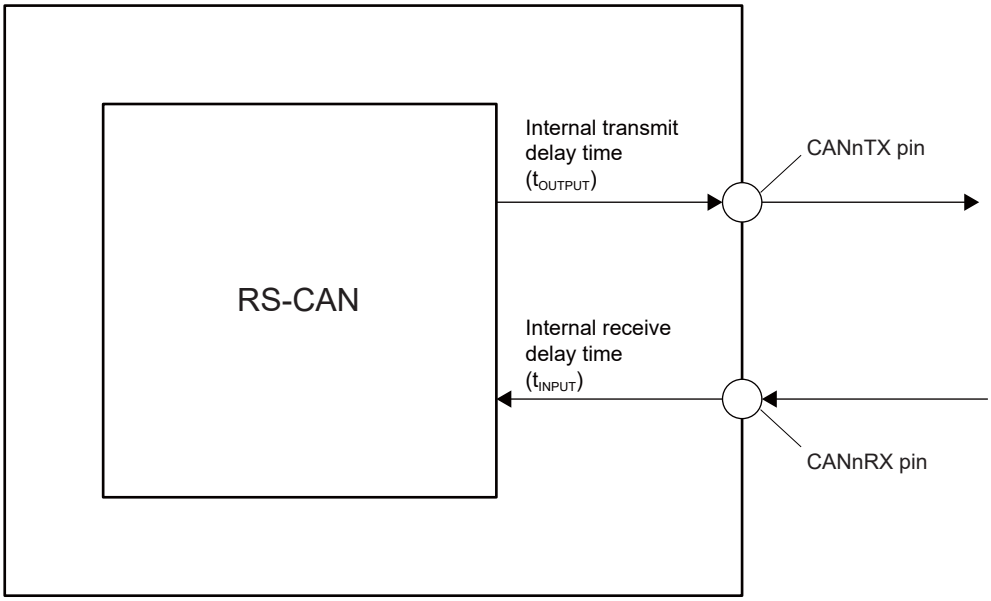

Figure 37.5 RS-CAN Timing

37.9.9 RLIN3 Timing

Conditions: See **Section 37.1.1.1, Common Conditions**.

Item	Symbol	Condition	MIN.	TYP.	MAX.	Unit
RLIN3 transfer rate		LIN function	1		20	Kbps
		UART function			8	Mbps

37.9.10 FlexRay Timing

Conditions: See **Section 37.1.1.1, Common Conditions**.
The specification in this section is only applicable for high speed mode.

Item	Symbol	Condition	MIN.	TYP.	MAX.	Unit
Transfer rate					10	Mbps

37.9.11 PSI5 Timing

Conditions: See **Section 37.1.1.1, Common Conditions**.

Item	Symbol	Condition	MIN.	TYP.	MAX.	Unit
Bit time	(1)	125 Kbps	7.6	8.0	8.4	μs
	(2)	189 Kbps	5.0	5.3	5.6	μs
	(3)	250 Kbps		4.0		μs
Gap time	(4)	125 Kbps	8.4			μs
	(5)	189 Kbps	5.6			μs
	(6)	250 Kbps	2.0			μs

37.9.12 RSENT Timing

Conditions: See **Section 37.1.1.1, Common Conditions**.

Item	Symbol	Condition	MIN.	TYP.	MAX.	Unit
Tick Time			1		90	μs

37.10 POC Characteristics

Conditions: See **Section 37.1.1.1, Common Conditions**.

Item	Symbol	Condition	MIN.	TYP.	MAX.	Unit
Detection voltage	VPOC	Rising	2.7	2.85	3.0	V
		Falling	2.7	2.8	2.9	V
Response time 2	t_{D_POC2}	After power on Voltage ramp (t_{VS3}) = 0.02 V/ms to 20 V/ms			2	ms
VCC minimum width	t_{W_POC}		0.2			ms
VCC voltage ramp	t_{VS3}		0.02		20	V/ms

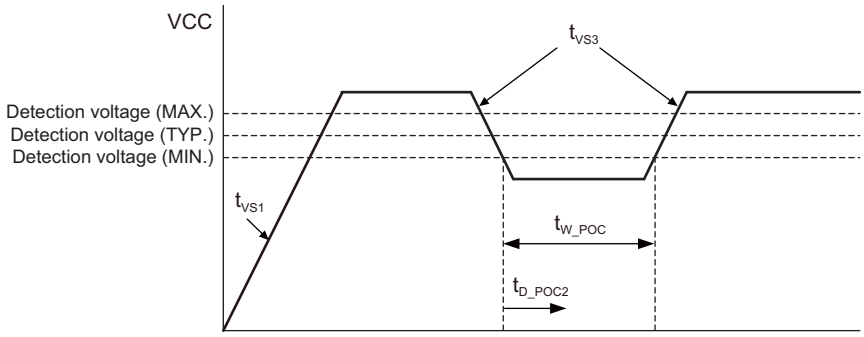

37.11 LVI Characteristics

Conditions: See **Section 37.1.1.1, Common Conditions**.

Item	Symbol	Condition	MIN.	TYP.	MAX.	Unit
Detection voltage	VLVI0	Rising	4.36	4.51	4.7	V
		Falling	4.35	4.5	4.65	V
	VLVI2	Rising	3.01	3.11	3.25	V
		Falling	3.0	3.1	3.24	V
Response time	t_{D_LVI}				2	ms
VCC minimum width	t_{W_LVI}		0.2			ms
VCC voltage ramp	t_{VS}		0.02		20	V/ms
Startup stabilization time	t_{S_LVI}				80	μs

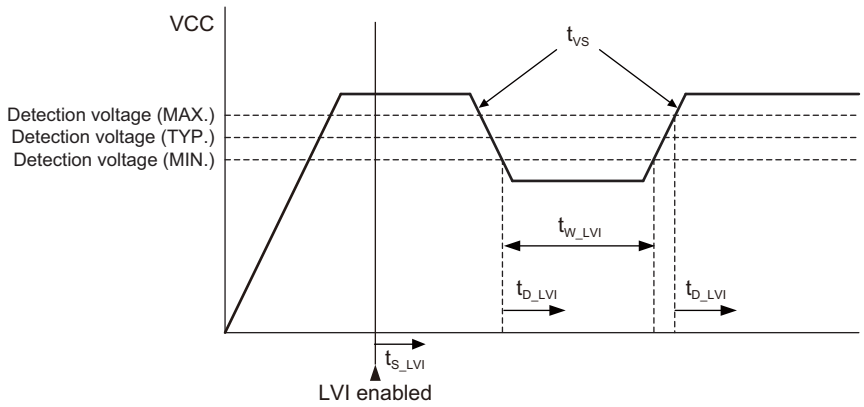

37.12 Core Voltage Monitor Characteristics

Conditions: See **Section 37.1.1.1, Common Conditions**.

Item	Symbol	Condition	MIN.	TYP.	MAX.	Unit
High VDD Detection voltage	VCVMH		1.35	1.40	1.45	V
Low VDD Detection voltage	VCVML		1.10	1.15	1.20	V
Response time	t_{D_CVM}				12	μs

37.13 Temperature Sensor

Conditions: See **Section 37.1.1.1, Common Conditions**.

Item	Symbol	Condition	MIN.	TYP.	MAX.	Unit
Temperature precision		Tj = +25 to +150°C	–6		6	°C
		Tj = –40 to +25°C	–12		12	°C
Operation stabilization waiting time	t_{TSSB}		200			μs

37.14 BIST Execution Time

Conditions: See **Section 37.1.1.1, Common Conditions**.

Item	Symbol	Condition	MIN.	TYP.	MAX.	Unit
BIST execution time					30	ms

37.15 A/D Convertor Characteristics

Conditions: See **Section 37.1.1.1, Common Conditions**.

(1/2)

Item	Symbol	Condition		MIN.	TYP.	MAX.	Unit
Macro operation clock						40	MHz
Resolution	RESn				12		bit
Conversion time	t_{CONn}	ADCDnSMPCR = 0000_H, CLK_ADC = 40 MHz			1		μs
		ADCDnSMPCR = $90CC_H$, CLK_ADC = 20 MHz			11.3		μs
Total errors[*1]	TOEn	AnVCC, AnVREFH = 4.3 V to 5.5 V, AnVCC – AnVREFH < 1V	ADCDnIm, When channel T&H is not used			±4.0	LSB
			ADCDnIm, When channel T&H is used			±6.0	LSB
		AnVCC, AnVREFH = 3.0 V to 3.6 V, AnVCC – AnVREFH < 1V	ADCDnIm, When channel T&H is not used			±6.0	LSB
			ADCDnIm, When channel T&H is used			±8.0	LSB
Integral nonlinear [*1]	ILEn	AnVCC, AnVREFH = 4.3 V to 5.5 V, AnVCC – AnVREFH < 1V	ADCDnIm, When channel T&H is not used			±2.0	LSB
			ADCDnIm, When channel T&H is used			±3.0	LSB
		AnVCC, AnVREFH = 3.0 V to 3.6 V, AnVCC – AnVREFH < 1V	ADCDnIm, When channel T&H is not used			±3.0	LSB
			ADCDnIm, When channel T&H is used			±4.0	LSB
Differential nonlinear[*1]	DLEn	AnVCC, AnVREFH = 4.3 V to 5.5 V, AnVCC – AnVREFH < 1V	ADCDnIm, When channel T&H is not used			±1.0	LSB
			ADCDnIm, When channel T&H is used			±1.0	LSB
		AnVCC, AnVREFH = 3.0 V to 3.6 V, AnVCC – AnVREFH < 1V	ADCDnIm, When channel T&H is not used			±2.0, –1.0	LSB
			ADCDnIm, When channel T&H is used			±3.0, –1.0	LSB

(2/2)

Item	Symbol	Condition		MIN.	TYP.	MAX.	Unit
Offset error*1	ZSEn	AnVCC, AnVREFH = 4.3 V to 5.5 V, AnVCC – AnVREFH < 1V	ADCDnIm, When channel T&H is not used			±3.5	LSB
			ADCDnIm, When channel T&H is used			±5.5	LSB
		AnVCC, AnVREFH = 3.0 V to 3.6 V, AnVCC – AnVREFH < 1V	ADCDnIm, When channel T&H is not used			±5.5	LSB
			ADCDnIm, When channel T&H is used			±7.5	LSB
Full-scale error*1	FSEn	AnVCC, AnVREFH = 4.3 V to 5.5 V, AnVCC – AnVREFH < 1V	ADCDnIm, When channel T&H is not used			±3.5	LSB
			ADCDnIm, When channel T&H is used			±5.5	LSB
		AnVCC, AnVREFH = 3.0 V to 3.6 V, AnVCC – AnVREFH < 1V	ADCDnIm, When channel T&H is not used			±5.5	LSB
			ADCDnIm, When channel T&H is used			±7.5	LSB
Analog input voltage	VAINmSN	AnVCC – AnVREFH < 1 V	When channel T&H is not used	AnVSS		AnVREFH	V
			When channel T&H is used	AnVSS + 0.2 V		AnVREFH – 0.2 V	V
Sampling time	t_{SMP}	ADCDnSMPCR = 0000_H, CLK_ADC = 40 MHz			t_{CONn} × (18/40)		μs
		ADCDnSMPCR = $90CC_H$, CLK_ADC = 20 MHz			t_{CONn} × (204/226)		μs
Channel T&H hold time*2	t_{THHOLD}					10	μs
Pull-up resistor for A/D wiring break detection	RU_AIN			10	20	40	KΩ
Pull-down resistor for A/D wiring break	RD_AIN			10	20	40	KΩ
Total errors at self-diagnosis	TESH0SN	When A/D conversion circuit self-diagnostic function is used				±40	LSB
		When pin-level self-diagnosis is used	AnVREFH = 4.3 V to 5.5 V			±80	LSB
			AnVREFH = 3.0 V to 3.6 V			±170	LSB
Equivalent input capacitance	CIN	During standby				10	pF
		During sampling				20	pF
Allowable analog signal impedance	—	Apply 0.1uF to analog pin		—	—	20	KΩ

Note: n = 0,1 (number of units)
m = 0 to 11 (number of channels)

Note 1. The values in the above table do not include quantization errors.

Note 2. Available retain time of sampling value by T&H circuit. Between sampling completion by T&H circuit and sampling completion of 12 bit SAR-AD by S/H circuit need to be executed within this time.

CAUTIONS

1. **If the current is injected to an analog input pin during the pin-level self-diagnosis, the conversion accuracy of the diagnostic voltage for the corresponding channel is not guaranteed.**
2. **When analog input pin which is applied injection current just before A/D Conversion Circuit Self-Diagnostic is converted, conversion accuracy of diagnostic voltage for A/D Conversion Circuit Self-Diagnostic is not guaranteed.**

37.16 Code Flash Characteristics

Table 37.11 Code Flash Basic Characteristics

Item	Symbol	Condition	MIN.	TYP.	MAX.	Unit
Flash sequencer operation frequency	f_{CLKP_L}				40	MHz
Programming endurance*1	CWRT	Retained for 20 years*2	1000			Times
Temperature range of programming	TPRG	Tj	–40		+150	°C
Temperature range of reading	TREAD	Tj	–40		+150	°C

Note 1. Programming endurance is defined as the number of times each block is erased. Where programming endurance is n times (n = 1000 in this case), each block is erasable n times. For example, given a memory device that has 32-Kbyte erasure blocks, programming in the address range of each 256-byte programming block (128 programming operations, one for each block) in an erasure block and then erasing the block counts as one time in terms of programming endurance. However, programming of a given address range more than once after erasure is not possible (overwriting after programming is prohibited).

Note 2. This is the case when the average Ta is 85°C.

Table 37.12 Code Flash Programming Characteristics

Conditions: See **Section 37.1.1.1, Common Conditions**.

Item	Condition	Block Size	MIN.	TYP.	MAX.	Unit
Programming time*1	Programming endurance < 100 times	256B		2*1	6*1	ms
		32KB		200	360	ms
	Programming endurance ≥ 100 times	256B		2.4*1	7.2*1	ms
		32KB		240	432	ms
Erasing time*1	Programming endurance < 100 times	8KB		50	120	ms
		32KB		200	480	ms
	Programming endurance ≥ 100 times	8KB		60	144	ms
		32KB		240	576	ms

Note 1. Values are only for processing by hardware. Software overhead is not taken into account.

37.17 Data Flash Characteristics

Item	Symbol	Condition	MIN.	TYP.	MAX.	Unit
Flash sequencer operation frequency	f_{CLKP_L}				40	MHz
Programming endurance[*1]	DWRT	Retained for 20 years[*2]	125000			Times
		Retained for 3 years[*2]	250000			Times
Temperature range of programming	TPRG	Tj	–40		+150	°C
Temperature range of reading	TREAD	Tj	–40		+150	°C

Note 1. Programming endurance is defined as the number of times each block is erased. Where programming endurance is n times (n = 125000 in this case), each block is erasable n times. For example, given a memory device that has 64-byte erasure blocks, programming in the address range of each 4-byte programming block (16 programming operations, one for each block) in an erasure block and then erasing the block counts as one time in terms of programming endurance. However, programming of a given address range more than once after erasure is not possible (overwriting after programming is prohibited).

Note 2. This is the case when the average Ta is 85°C.

Table 37.13 Data Flash Programing Characteristics

Conditions: See **Section 37.1.1.1, Common Conditions**.

Item	Block Size	MIN.	TYP.	MAX.	Unit
Programming time	4 B		0.3[*1]	1.7[*1]	ms
	32 KB		2.5	6.8	s
Erasing time	64 B		3[*1]	10[*1]	ms
	32 KB		1.6	5.2	s
Blank check time	4 B			30[*1]	μs
	64 B			100[*1]	μs

Note 1. Values are only for processing by hardware. Software overhead is not taken into account.

37.18 Debug Interface

37.18.1 JTAG/NEXUS Timing

Table 37.14 JTAG/NEXUS Timing

Conditions: Tj = –40°C to 150°C, CL = 30 pF

Item	Symbol	Condition	MIN.	MAX.	Unit
TCK cycle time	t_{TCKW}		40	—	ns
TCK high level width	t_{TCKWH}		16	—	ns
TCK low level width	t_{TCKWL}		16	—	ns
TMS/TDI setup time (up to TCK↑)	t_{TISU}		12	—	ns
TMS/TDI retaining time (up to TCK ↑)	t_{TIH}		12	—	ns
TDO output delay time (up to TCK↓)	t_{TDOD}		—	t_{TCKW} –20	ns
RDY output delay time (up to TCK ↓)	t_{RDYD}		—	t_{TCKW} –20	ns
$\overline{TRST}$ low level width	t_{TRSTWL}		1500	—	ns
TCK/$\overline{TRST}$/TMS/TDI input rising time	t_{TIR}		—	12	ns
TCK/$\overline{TRST}$/TMS/TDI input falling time	t_{TIF}		—	12	ns

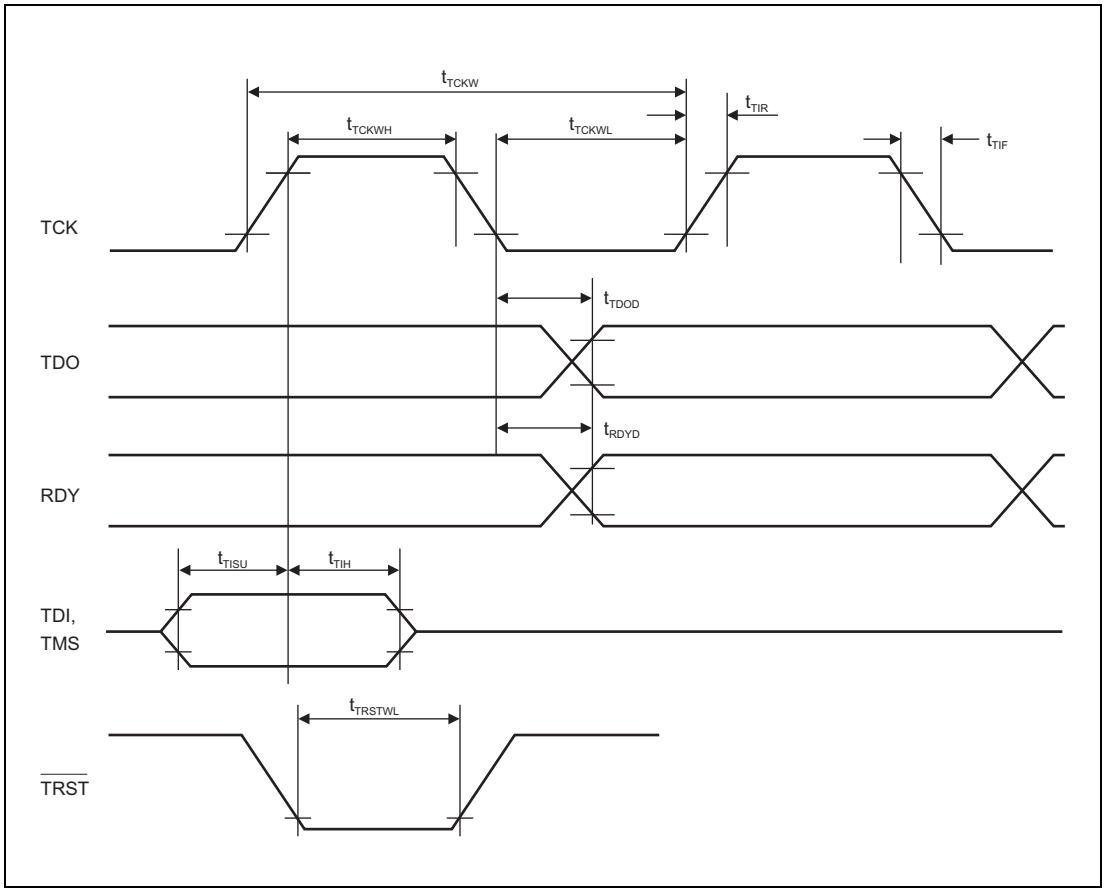

Figure 37.6 JTAG/NEXUS Timing

37.18.2 LDU 4-Wire Timing

Table 37.15 LDU 4-Wire Timing

Conditions: Tj = –40°C to 150°C, CL = 30 pF

Item	Symbol	Condition	MIN.	MAX.	Unit
LPDCLK cycle time	t_{LPDCKW}		83.3 (max.12 MHz)	—	ns
LPDCLK high level width	$t_{LPDCKWH}$		t_{LPDCKW}/2–10	—	ns
LPDCLK low level width	$t_{LPDCKWL}$		t_{LPDCKW}/2–10	—	ns
LPDCLK input rising time	t_{LPDCKR}		—	12	ns
LPDCLK input falling time	t_{LPDCKF}		—	12	ns
LPDI setup time (up to LPDCLK ↑)	t_{LPDSU}		41	—	ns
LPDI retaining time (up to LPDCLK ↑)	t_{LPDH}		3	—	ns
LPDCLKO cycle time	$t_{LPDCKOW}$		83.3 (max.12 MHz)	—	ns
LPDCLKO high level width	$t_{LPDCKOWH}$		$t_{LPDCKWH}$/2–12	—	ns
LPDCLKO low level width	$t_{LPDCKOWL}$		$t_{LPDCKWL}$/2–12	—	ns
LPDCLKO rising time	$t_{LPDCKOR}$		—	12	ns
LPDCLKO falling time	$t_{LPDCKOF}$		—	12	ns
LPDO output delay (up to LPDCLKO ↑)	t_{LPDOD}		0	15	ns

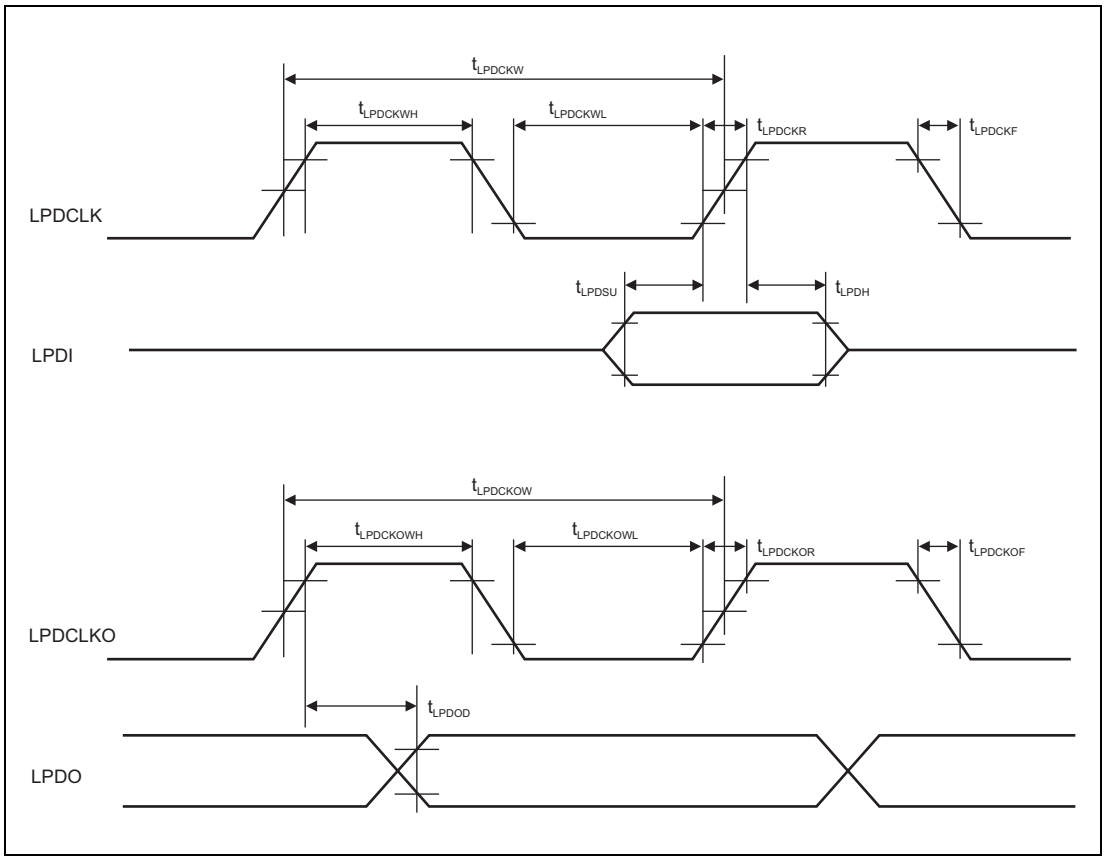

Figure 37.7 LDU 4-Wire Timing

37.18.3 AUD RAM Monitoring

Table 37.16 Timing of AUD RAM Monitoring

Conditions: Tj = –40°C to 125°C, CL = 30 pF

Item	Symbol	MIN.	MAX.	Unit
AUDCK cycle time (monitoring mode)	$t_{AUCKMcyc}$	50	—	ns
AUDCK high level width (monitoring mode)	t_{AUCKMH}	0.4		$t_{AUCKMcyc}$
AUDCK low level width (monitoring mode)	t_{AUCKML}	0.4		$t_{AUCKMcyc}$
AUDRST setup time (monitoring mode)	$t_{AMRSTMS}$	30		ns
AUDRST pulse width (monitoring mode)	$t_{AURSTMW}$	5		$t_{AUCKMcyc}$
Monitoring data output delay time	t_{AUDTMD}	—	35	ns
Monitoring data input setup time	t_{AUDTMS}	15		ns
Monitoring data input hold time	t_{AUDTMH}	5		ns
AUDSYNC input setup time	t_{AUDSYS}	15		ns
AUDSYNC input hold time	t_{AUDSYH}	5		ns

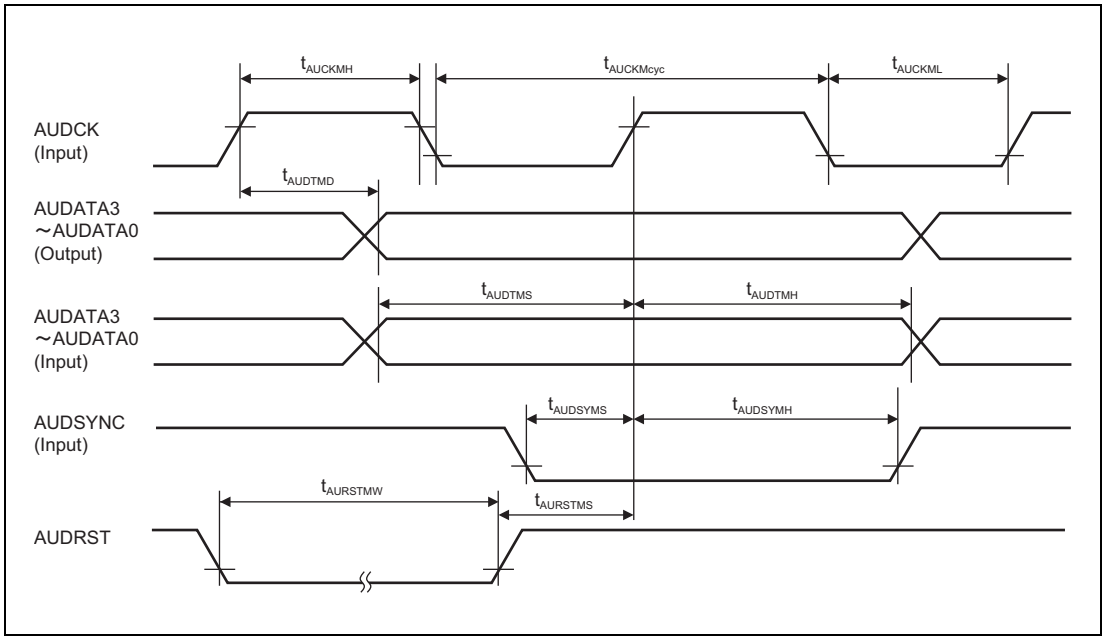

Figure 37.8 Timing of AUD RAM Monitoring

37.19 Thermal Characteristics

Table 37.17 Thermal Resistance of RH850/P1x

Device	Parameter	Package	Condition	Estimated Value	Unit
P1M	ψjb1	LFQFP100 (14 × 14)	JEDEC, JESD51-7, f_{CPLL} = 160MHz, TJ, max = 150°C	26.5	°C/W
	ψjb2	LFQFP144 (16 × 16)	JEDEC, JESD51-7, f_{CPLL} = 160MHz, TJ, max = 150°C	24.7	°C/W
	ψjb3	LFQFP144 (20 × 20)	JEDEC, JESD51-7, f_{CPLL} = 160MHz, TJ, max = 150°C	25.9	°C/W

Note: The parameter values of thermal resistance and characteristics vary depending on the usage environment.

Appendix A. List of Registers

Table A.1 List of Registers (1/124)

Module	Register	Symbol	Value after Reset	Number of Bits	Address	Peripheral IP group	Access Size	Reset Source*1							Access Authority*1	
								POCRES	CVMRES	EXTRES	DBRES	ECMRES	BISTRES	SWRES	SV	UM
FLXA0	FlexRay Operation Control Register	FLXA0FROC	0000 0000$_H$	32	1002 0004$_H$	H-Bus (FlexRay)	8, 16, 32	√	√	√	√	√	√	√	√	√
FLXA0	FlexRay Operation Status Register	FLXA0FROS	0000 0000$_H$	32	1002 000C$_H$	H-Bus (FlexRay)	8, 16, 32	√	√	√	√	√	√	√	√	√
FLXA0	FlexRay Lock Register	FLXA0FRLCK	0000 0000$_H$	32	1002 001C$_H$	H-Bus (FlexRay)	8, 16, 32	√	√	√	√	√	√	√	√	√
FLXA0	FlexRay Error Interrupt Register	FLXA0FREIR	0000 0000$_H$	32	1002 0020$_H$	H-Bus (FlexRay)	8, 16, 32	√	√	√	√	√	√	√	√	√
FLXA0	FlexRay Status Interrupt Register	FLXA0FRSIR	0000 0000$_H$	32	1002 0024$_H$	H-Bus (FlexRay)	8, 16, 32	√	√	√	√	√	√	√	√	√
FLXA0	FlexRay Error Interrupt Line Select	FLXA0FREILS	0000 0000$_H$	32	1002 0028$_H$	H-Bus (FlexRay)	8, 16, 32	√	√	√	√	√	√	√	√	√
FLXA0	FlexRay Status Interrupt Line Select	FLXA0FRSILS	0303 FFFF$_H$	32	1002 002C$_H$	H-Bus (FlexRay)	8, 16, 32	√	√	√	√	√	√	√	√	√
FLXA0	FlexRay Error Interrupt Enable Set Register	FLXA0FREIES	0000 0000$_H$	32	1002 0030$_H$	H-Bus (FlexRay)	8, 16, 32	√	√	√	√	√	√	√	√	√
FLXA0	FlexRay Error Interrupt Enable Reset Register	FLXA0FREIER	0000 0000$_H$	32	1002 0034$_H$	H-Bus (FlexRay)	8, 16, 32	√	√	√	√	√	√	√	√	√
FLXA0	FlexRay Status Interrupt Enable Set Register	FLXA0FRSIES	0000 0000$_H$	32	1002 0038$_H$	H-Bus (FlexRay)	8, 16, 32	√	√	√	√	√	√	√	√	√
FLXA0	FlexRay Status Interrupt Enable Reset Register	FLXA0FRSIER	0000 0000$_H$	32	1002 003C$_H$	H-Bus (FlexRay)	8, 16, 32	√	√	√	√	√	√	√	√	√
FLXA0	FlexRay Interrupt Line Enable Register	FLXA0FRILE	0000 0000$_H$	32	1002 0040$_H$	H-Bus (FlexRay)	8, 16, 32	√	√	√	√	√	√	√	√	√
FLXA0	FlexRay Timer 0 Configuration Register	FLXA0FRT0C	0000 0000$_H$	32	1002 0044$_H$	H-Bus (FlexRay)	8, 16, 32	√	√	√	√	√	√	√	√	√
FLXA0	FlexRay Timer 1 Configuration Register	FLXA0FRT1C	0002 0000$_H$	32	1002 0048$_H$	H-Bus (FlexRay)	8, 16, 32	√	√	√	√	√	√	√	√	√
FLXA0	FlexRay Stop Watch Register 1	FLXA0FRSTPW1	0000 0000$_H$	32	1002 004C$_H$	H-Bus (FlexRay)	8, 16, 32	√	√	√	√	√	√	√	√	√
FLXA0	FlexRay Stop Watch Register 2	FLXA0FRSTPW2	0000 0000$_H$	32	1002 0050$_H$	H-Bus (FlexRay)	8, 16, 32	√	√	√	√	√	√	√	√	√
FLXA0	FlexRay SUC Configuration Register 1	FLXA0FRSUCC1	0C40 1080$_H$	32	1002 0080$_H$	H-Bus (FlexRay)	8, 16, 32	√	√	√	√	√	√	√	√	√
FLXA0	FlexRay SUC Configuration Register 2	FLXA0FRSUCC2	0100 0504$_H$	32	1002 0084$_H$	H-Bus (FlexRay)	8, 16, 32	√	√	√	√	√	√	√	√	√
FLXA0	FlexRay SUC Configuration Register 3	FLXA0FRSUCC3	0000 0011$_H$	32	1002 0088$_H$	H-Bus (FlexRay)	8, 16, 32	√	√	√	√	√	√	√	√	√
FLXA0	FlexRay NEM Configuration Register	FLXA0FRNEMC	0000 0000$_H$	32	1002 008C$_H$	H-Bus (FlexRay)	8, 16, 32	√	√	√	√	√	√	√	√	√
FLXA0	FlexRay PRT Configuration Register 1	FLXA0FRPRTC1	084C 0633$_H$	32	1002 0090$_H$	H-Bus (FlexRay)	8, 16, 32	√	√	√	√	√	√	√	√	√
FLXA0	FlexRay PRT Configuration Register 2	FLXA0FRPRTC2	0F2D 0A0E$_H$	32	1002 0094$_H$	H-Bus (FlexRay)	8, 16, 32	√	√	√	√	√	√	√	√	√
FLXA0	FlexRay MHD Configuration Register	FLXA0FRMHDC	0000 0000$_H$	32	1002 0098$_H$	H-Bus (FlexRay)	8, 16, 32	√	√	√	√	√	√	√	√	√
FLXA0	FlexRay GTU Configuration Register 1	FLXA0FRGTUC1	0000 0280$_H$	32	1002 00A0$_H$	H-Bus (FlexRay)	8, 16, 32	√	√	√	√	√	√	√	√	√
FLXA0	FlexRay GTU Configuration Register 2	FLXA0FRGTUC2	0002 000A$_H$	32	1002 00A4$_H$	H-Bus (FlexRay)	8, 16, 32	√	√	√	√	√	√	√	√	√
FLXA0	FlexRay GTU Configuration Register 3	FLXA0FRGTUC3	0202 0000$_H$	32	1002 00A8$_H$	H-Bus (FlexRay)	8, 16, 32	√	√	√	√	√	√	√	√	√
FLXA0	FlexRay GTU Configuration Register 4	FLXA0FRGTUC4	0008 0007$_H$	32	1002 00AC$_H$	H-Bus (FlexRay)	8, 16, 32	√	√	√	√	√	√	√	√	√
FLXA0	FlexRay GTU Configuration Register 5	FLXA0FRGTUC5	0E00 0000$_H$	32	1002 00B0$_H$	H-Bus (FlexRay)	8, 16, 32	√	√	√	√	√	√	√	√	√
FLXA0	FlexRay GTU Configuration Register 6	FLXA0FRGTUC6	0002 0000$_H$	32	1002 00B4$_H$	H-Bus (FlexRay)	8, 16, 32	√	√	√	√	√	√	√	√	√
FLXA0	FlexRay GTU Configuration Register 7	FLXA0FRGTUC7	0002 0004$_H$	32	1002 00B8$_H$	H-Bus (FlexRay)	8, 16, 32	√	√	√	√	√	√	√	√	√
FLXA0	FlexRay GTU Configuration Register 8	FLXA0FRGTUC8	0000 0002$_H$	32	1002 00BC$_H$	H-Bus (FlexRay)	8, 16, 32	√	√	√	√	√	√	√	√	√
FLXA0	FlexRay GTU Configuration Register 9	FLXA0FRGTUC9	0000 0101$_H$	32	1002 00C0$_H$	H-Bus (FlexRay)	8, 16, 32	√	√	√	√	√	√	√	√	√
FLXA0	FlexRay GTU Configuration Register 10	FLXA0FRGTUC10	0002 0005$_H$	32	1002 00C4$_H$	H-Bus (FlexRay)	8, 16, 32	√	√	√	√	√	√	√	√	√

Table A.1 List of Registers (2/124)

Module	Register	Symbol	Value after Reset	Number of Bits	Address	Peripheral IP group	Access Size	Reset Source*1							Access Authority*1	
								POCRES	CVMRES	EXTRES	DBRES	ECMRES	BISTRES	SWRES	SV	UM
FLXA0	FlexRay GTU Configuration Register 11	FLXA0FRGTUC11	0000 0000$_H$	32	1002 00C8$_H$	H-Bus (FlexRay)	8, 16, 32	√	√	√	√	√	√	√	√	√
FLXA0	FlexRay CC Status Vector Register	FLXA0FRCCSV	0010 4000$_H$	32	1002 0100$_H$	H-Bus (FlexRay)	8, 16, 32	√	√	√	√	√	√	√	√	√
FLXA0	FlexRay CC Error Vector Register	FLXA0FRCCEV	0000 0000$_H$	32	1002 0104$_H$	H-Bus (FlexRay)	8, 16, 32	√	√	√	√	√	√	√	√	√
FLXA0	FlexRay Slot Counter Value Register	FLXA0FRSCV	0000 0000$_H$	32	1002 0110$_H$	H-Bus (FlexRay)	8, 16, 32	√	√	√	√	√	√	√	√	√
FLXA0	FlexRay Macrotick and Cycle Counter Value Register	FLXA0FRMTCCV	0000 0000$_H$	32	1002 0114$_H$	H-Bus (FlexRay)	8, 16, 32	√	√	√	√	√	√	√	√	√
FLXA0	FlexRay Rate Correction Value Register	FLXA0FRRCV	0000 0000$_H$	32	1002 0118$_H$	H-Bus (FlexRay)	8, 16, 32	√	√	√	√	√	√	√	√	√
FLXA0	FlexRay Offset Correction Value Register	FLXA0FROCV	0000 0000$_H$	32	1002 011C$_H$	H-Bus (FlexRay)	8, 16, 32	√	√	√	√	√	√	√	√	√
FLXA0	FlexRay Sync Frame Status Register	FLXA0FRSFS	0000 0000$_H$	32	1002 0120$_H$	H-Bus (FlexRay)	8, 16, 32	√	√	√	√	√	√	√	√	√
FLXA0	FlexRay Symbol Window and NIT Status Register	FLXA0FRSWNIT	0000 0000$_H$	32	1002 0124$_H$	H-Bus (FlexRay)	8, 16, 32	√	√	√	√	√	√	√	√	√
FLXA0	FlexRay Aggregated Channel Status Register	FLXA0FRACS	0000 0000$_H$	32	1002 0128$_H$	H-Bus (FlexRay)	8, 16, 32	√	√	√	√	√	√	√	√	√
FLXA0	FlexRay Even Sync ID Register 1	FLXA0FRESID1	0000 0000$_H$	32	1002 0130$_H$	H-Bus (FlexRay)	8, 16, 32	√	√	√	√	√	√	√	√	√
FLXA0	FlexRay Even Sync ID Register 2	FLXA0FRESID2	0000 0000$_H$	32	1002 0134$_H$	H-Bus (FlexRay)	8, 16, 32	√	√	√	√	√	√	√	√	√
FLXA0	FlexRay Even Sync ID Register 3	FLXA0FRESID3	0000 0000$_H$	32	1002 0138$_H$	H-Bus (FlexRay)	8, 16, 32	√	√	√	√	√	√	√	√	√
FLXA0	FlexRay Even Sync ID Register 4	FLXA0FRESID4	0000 0000$_H$	32	1002 013C$_H$	H-Bus (FlexRay)	8, 16, 32	√	√	√	√	√	√	√	√	√
FLXA0	FlexRay Even Sync ID Register 5	FLXA0FRESID5	0000 0000$_H$	32	1002 0140$_H$	H-Bus (FlexRay)	8, 16, 32	√	√	√	√	√	√	√	√	√
FLXA0	FlexRay Even Sync ID Register 6	FLXA0FRESID6	0000 0000$_H$	32	1002 0144$_H$	H-Bus (FlexRay)	8, 16, 32	√	√	√	√	√	√	√	√	√
FLXA0	FlexRay Even Sync ID Register 7	FLXA0FRESID7	0000 0000$_H$	32	1002 0148$_H$	H-Bus (FlexRay)	8, 16, 32	√	√	√	√	√	√	√	√	√
FLXA0	FlexRay Even Sync ID Register 8	FLXA0FRESID8	0000 0000$_H$	32	1002 014C$_H$	H-Bus (FlexRay)	8, 16, 32	√	√	√	√	√	√	√	√	√
FLXA0	FlexRay Even Sync ID Register 9	FLXA0FRESID9	0000 0000$_H$	32	1002 0150$_H$	H-Bus (FlexRay)	8, 16, 32	√	√	√	√	√	√	√	√	√
FLXA0	FlexRay Even Sync ID Register 10	FLXA0FRESID10	0000 0000$_H$	32	1002 0154$_H$	H-Bus (FlexRay)	8, 16, 32	√	√	√	√	√	√	√	√	√
FLXA0	FlexRay Even Sync ID Register 11	FLXA0FRESID11	0000 0000$_H$	32	1002 0158$_H$	H-Bus (FlexRay)	8, 16, 32	√	√	√	√	√	√	√	√	√
FLXA0	FlexRay Even Sync ID Register 12	FLXA0FRESID12	0000 0000$_H$	32	1002 015C$_H$	H-Bus (FlexRay)	8, 16, 32	√	√	√	√	√	√	√	√	√
FLXA0	FlexRay Even Sync ID Register 13	FLXA0FRESID13	0000 0000$_H$	32	1002 0160$_H$	H-Bus (FlexRay)	8, 16, 32	√	√	√	√	√	√	√	√	√
FLXA0	FlexRay Even Sync ID Register 14	FLXA0FRESID14	0000 0000$_H$	32	1002 0164$_H$	H-Bus (FlexRay)	8, 16, 32	√	√	√	√	√	√	√	√	√
FLXA0	FlexRay Even Sync ID Register 15	FLXA0FRESID15	0000 0000$_H$	32	1002 0168$_H$	H-Bus (FlexRay)	8, 16, 32	√	√	√	√	√	√	√	√	√
FLXA0	FlexRay Odd Sync ID Register 1	FLXA0FROSID1	0000 0000$_H$	32	1002 0170$_H$	H-Bus (FlexRay)	8, 16, 32	√	√	√	√	√	√	√	√	√
FLXA0	FlexRay Odd Sync ID Register 2	FLXA0FROSID2	0000 0000$_H$	32	1002 0174$_H$	H-Bus (FlexRay)	8, 16, 32	√	√	√	√	√	√	√	√	√
FLXA0	FlexRay Odd Sync ID Register 3	FLXA0FROSID3	0000 0000$_H$	32	1002 0178$_H$	H-Bus (FlexRay)	8, 16, 32	√	√	√	√	√	√	√	√	√
FLXA0	FlexRay Odd Sync ID Register 4	FLXA0FROSID4	0000 0000$_H$	32	1002 017C$_H$	H-Bus (FlexRay)	8, 16, 32	√	√	√	√	√	√	√	√	√
FLXA0	FlexRay Odd Sync ID Register 5	FLXA0FROSID5	0000 0000$_H$	32	1002 0180$_H$	H-Bus (FlexRay)	8, 16, 32	√	√	√	√	√	√	√	√	√
FLXA0	FlexRay Odd Sync ID Register 6	FLXA0FROSID6	0000 0000$_H$	32	1002 0184$_H$	H-Bus (FlexRay)	8, 16, 32	√	√	√	√	√	√	√	√	√
FLXA0	FlexRay Odd Sync ID Register 7	FLXA0FROSID7	0000 0000$_H$	32	1002 0188$_H$	H-Bus (FlexRay)	8, 16, 32	√	√	√	√	√	√	√	√	√
FLXA0	FlexRay Odd Sync ID Register 8	FLXA0FROSID8	0000 0000$_H$	32	1002 018C$_H$	H-Bus (FlexRay)	8, 16, 32	√	√	√	√	√	√	√	√	√
FLXA0	FlexRay Odd Sync ID Register 9	FLXA0FROSID9	0000 0000$_H$	32	1002 0190$_H$	H-Bus (FlexRay)	8, 16, 32	√	√	√	√	√	√	√	√	√
FLXA0	FlexRay Odd Sync ID Register 10	FLXA0FROSID10	0000 0000$_H$	32	1002 0194$_H$	H-Bus (FlexRay)	8, 16, 32	√	√	√	√	√	√	√	√	√

Table A.1 List of Registers (3/124)

Module	Register	Symbol	Value after Reset	Number of Bits	Address	Peripheral IP group	Access Size	Reset Source*1							Access Authority*1	
								POCRES	CVMRES	EXTRES	DBRES	ECMRES	BISTRES	SWRES	SV	UM
FLXA0	FlexRay Odd Sync ID Register 11	FLXA0FROSID11	$0000\ 0000_H$	32	$1002\ 0198_H$	H-Bus (FlexRay)	8, 16, 32	√	√	√	√	√	√	√	√	√
FLXA0	FlexRay Odd Sync ID Register 12	FLXA0FROSID12	$0000\ 0000_H$	32	$1002\ 019C_H$	H-Bus (FlexRay)	8, 16, 32	√	√	√	√	√	√	√	√	√
FLXA0	FlexRay Odd Sync ID Register 13	FLXA0FROSID13	$0000\ 0000_H$	32	$1002\ 01A0_H$	H-Bus (FlexRay)	8, 16, 32	√	√	√	√	√	√	√	√	√
FLXA0	FlexRay Odd Sync ID Register 14	FLXA0FROSID14	$0000\ 0000_H$	32	$1002\ 01A4_H$	H-Bus (FlexRay)	8, 16, 32	√	√	√	√	√	√	√	√	√
FLXA0	FlexRay Odd Sync ID Register 15	FLXA0FROSID15	$0000\ 0000_H$	32	$1002\ 01A8_H$	H-Bus (FlexRay)	8, 16, 32	√	√	√	√	√	√	√	√	√
FLXA0	FlexRay Network Management Vector Register 1	FLXA0FRNMV1	$0000\ 0000_H$	32	$1002\ 01B0_H$	H-Bus (FlexRay)	8, 16, 32	√	√	√	√	√	√	√	√	√
FLXA0	FlexRay Network Management Vector Register 2	FLXA0FRNMV2	$0000\ 0000_H$	32	$1002\ 01B4_H$	H-Bus (FlexRay)	8, 16, 32	√	√	√	√	√	√	√	√	√
FLXA0	FlexRay Network Management Vector Register 3	FLXA0FRNMV3	$0000\ 0000_H$	32	$1002\ 01B8_H$	H-Bus (FlexRay)	8, 16, 32	√	√	√	√	√	√	√	√	√
FLXA0	FlexRay Message RAM Configuration Register	FLXA0FRMRC	$0180\ 0000_H$	32	$1002\ 0300_H$	H-Bus (FlexRay)	8, 16, 32	√	√	√	√	√	√	√	√	√
FLXA0	FlexRay FIFO Rejection Filter Register	FLXA0FRFRF	$0180\ 0000_H$	32	$1002\ 0304_H$	H-Bus (FlexRay)	8, 16, 32	√	√	√	√	√	√	√	√	√
FLXA0	FlexRay FIFO Rejection Filter Mask Register	FLXA0FRFRFM	$0000\ 0000_H$	32	$1002\ 0308_H$	H-Bus (FlexRay)	8, 16, 32	√	√	√	√	√	√	√	√	√
FLXA0	FlexRay FIFO Critical Level Register	FLXA0FRFCL	$0000\ 0080_H$	32	$1002\ 030C_H$	H-Bus (FlexRay)	8, 16, 32	√	√	√	√	√	√	√	√	√
FLXA0	FlexRay Message Handler Status Register	FLXA0FRMHDS	$0000\ 0080_H$	32	$1002\ 0310_H$	H-Bus (FlexRay)	8, 16, 32	√	√	√	√	√	√	√	√	√
FLXA0	FlexRay Last Dynamic Transmit Slot Register	FLXA0FRLDTS	$0000\ 0000_H$	32	$1002\ 0314_H$	H-Bus (FlexRay)	8, 16, 32	√	√	√	√	√	√	√	√	√
FLXA0	FlexRay FIFO Status Register	FLXA0FRFSR	$0000\ 0000_H$	32	$1002\ 0318_H$	H-Bus (FlexRay)	8, 16, 32	√	√	√	√	√	√	√	√	√
FLXA0	FlexRay Message Handler Constraints Flags Register	FLXA0FRMHDF	$0000\ 0000_H$	32	$1002\ 031C_H$	H-Bus (FlexRay)	8, 16, 32	√	√	√	√	√	√	√	√	√
FLXA0	FlexRay Transmission Register 1	FLXA0FRTXRQ1	$0000\ 0000_H$	32	$1002\ 0320_H$	H-Bus (FlexRay)	8, 16, 32	√	√	√	√	√	√	√	√	√
FLXA0	FlexRay Transmission Register 2	FLXA0FRTXRQ2	$0000\ 0000_H$	32	$1002\ 0324_H$	H-Bus (FlexRay)	8, 16, 32	√	√	√	√	√	√	√	√	√
FLXA0	FlexRay Transmission Register 3	FLXA0FRTXRQ3	$0000\ 0000_H$	32	$1002\ 0328_H$	H-Bus (FlexRay)	8, 16, 32	√	√	√	√	√	√	√	√	√
FLXA0	FlexRay Transmission Register 4	FLXA0FRTXRQ4	$0000\ 0000_H$	32	$1002\ 032C_H$	H-Bus (FlexRay)	8, 16, 32	√	√	√	√	√	√	√	√	√
FLXA0	FlexRay New Data Register 1	FLXA0FRNDAT1	$0000\ 0000_H$	32	$1002\ 0330_H$	H-Bus (FlexRay)	8, 16, 32	√	√	√	√	√	√	√	√	√
FLXA0	FlexRay New Data Register 2	FLXA0FRNDAT2	$0000\ 0000_H$	32	$1002\ 0334_H$	H-Bus (FlexRay)	8, 16, 32	√	√	√	√	√	√	√	√	√
FLXA0	FlexRay New Data Register 3	FLXA0FRNDAT3	$0000\ 0000_H$	32	$1002\ 0338_H$	H-Bus (FlexRay)	8, 16, 32	√	√	√	√	√	√	√	√	√
FLXA0	FlexRay New Data Register 4	FLXA0FRNDAT4	$0000\ 0000_H$	32	$1002\ 033C_H$	H-Bus (FlexRay)	8, 16, 32	√	√	√	√	√	√	√	√	√
FLXA0	FlexRay Message Buffer Status Changed Register 1	FLXA0FRMBSC1	$0000\ 0000_H$	32	$1002\ 0340_H$	H-Bus (FlexRay)	8, 16, 32	√	√	√	√	√	√	√	√	√
FLXA0	FlexRay Message Buffer Status Changed Register 2	FLXA0FRMBSC2	$0000\ 0000_H$	32	$1002\ 0344_H$	H-Bus (FlexRay)	8, 16, 32	√	√	√	√	√	√	√	√	√
FLXA0	FlexRay Message Buffer Status Changed Register 3	FLXA0FRMBSC3	$0000\ 0000_H$	32	$1002\ 0348_H$	H-Bus (FlexRay)	8, 16, 32	√	√	√	√	√	√	√	√	√
FLXA0	FlexRay Message Buffer Status Changed Register 4	FLXA0FRMBSC4	$0000\ 0000_H$	32	$1002\ 034C_H$	H-Bus (FlexRay)	8, 16, 32	√	√	√	√	√	√	√	√	√
FLXA0	FlexRay Write Data Section Register 1	FLXA0FRWRDS1	$0000\ 0000_H$	32	$1002\ 0400_H$	H-Bus (FlexRay)	8, 16, 32	√	√	√	√	√	√	√	√	√
FLXA0	FlexRay Write Data Section Register 2	FLXA0FRWRDS2	$0000\ 0000_H$	32	$1002\ 0404_H$	H-Bus (FlexRay)	8, 16, 32	√	√	√	√	√	√	√	√	√
FLXA0	FlexRay Write Data Section Register 3	FLXA0FRWRDS3	$0000\ 0000_H$	32	$1002\ 0408_H$	H-Bus (FlexRay)	8, 16, 32	√	√	√	√	√	√	√	√	√
FLXA0	FlexRay Write Data Section Register 4	FLXA0FRWRDS4	$0000\ 0000_H$	32	$1002\ 040C_H$	H-Bus (FlexRay)	8, 16, 32	√	√	√	√	√	√	√	√	√
FLXA0	FlexRay Write Data Section Register 5	FLXA0FRWRDS5	$0000\ 0000_H$	32	$1002\ 0410_H$	H-Bus (FlexRay)	8, 16, 32	√	√	√	√	√	√	√	√	√
FLXA0	FlexRay Write Data Section Register 6	FLXA0FRWRDS6	$0000\ 0000_H$	32	$1002\ 0414_H$	H-Bus (FlexRay)	8, 16, 32	√	√	√	√	√	√	√	√	√
FLXA0	FlexRay Write Data Section Register 7	FLXA0FRWRDS7	$0000\ 0000_H$	32	$1002\ 0418_H$	H-Bus (FlexRay)	8, 16, 32	√	√	√	√	√	√	√	√	√

Table A.1 List of Registers (4/124)

Module	Register	Symbol	Value after Reset	Number of Bits	Address	Peripheral IP group	Access Size	Reset Source*1							Access Authority*1	
								POCRES	CVMRES	EXTRES	DBRES	ECMRES	BISTRES	SWRES	SV	UM
FLXA0	FlexRay Write Data Section Register 8	FLXA0FRWRDS8	$0000\ 0000_H$	32	$1002\ 041C_H$	H-Bus (FlexRay)	8, 16, 32	√	√	√	√	√	√	√	√	√
FLXA0	FlexRay Write Data Section Register 9	FLXA0FRWRDS9	$0000\ 0000_H$	32	$1002\ 0420_H$	H-Bus (FlexRay)	8, 16, 32	√	√	√	√	√	√	√	√	√
FLXA0	FlexRay Write Data Section Register 10	FLXA0FRWRDS10	$0000\ 0000_H$	32	$1002\ 0424_H$	H-Bus (FlexRay)	8, 16, 32	√	√	√	√	√	√	√	√	√
FLXA0	FlexRay Write Data Section Register 11	FLXA0FRWRDS11	$0000\ 0000_H$	32	$1002\ 0428_H$	H-Bus (FlexRay)	8, 16, 32	√	√	√	√	√	√	√	√	√
FLXA0	FlexRay Write Data Section Register 12	FLXA0FRWRDS12	$0000\ 0000_H$	32	$1002\ 042C_H$	H-Bus (FlexRay)	8, 16, 32	√	√	√	√	√	√	√	√	√
FLXA0	FlexRay Write Data Section Register 13	FLXA0FRWRDS13	$0000\ 0000_H$	32	$1002\ 0430_H$	H-Bus (FlexRay)	8, 16, 32	√	√	√	√	√	√	√	√	√
FLXA0	FlexRay Write Data Section Register 14	FLXA0FRWRDS14	$0000\ 0000_H$	32	$1002\ 0434_H$	H-Bus (FlexRay)	8, 16, 32	√	√	√	√	√	√	√	√	√
FLXA0	FlexRay Write Data Section Register 15	FLXA0FRWRDS15	$0000\ 0000_H$	32	$1002\ 0438_H$	H-Bus (FlexRay)	8, 16, 32	√	√	√	√	√	√	√	√	√
FLXA0	FlexRay Write Data Section Register 16	FLXA0FRWRDS16	$0000\ 0000_H$	32	$1002\ 043C_H$	H-Bus (FlexRay)	8, 16, 32	√	√	√	√	√	√	√	√	√
FLXA0	FlexRay Write Data Section Register 17	FLXA0FRWRDS17	$0000\ 0000_H$	32	$1002\ 0440_H$	H-Bus (FlexRay)	8, 16, 32	√	√	√	√	√	√	√	√	√
FLXA0	FlexRay Write Data Section Register 18	FLXA0FRWRDS18	$0000\ 0000_H$	32	$1002\ 0444_H$	H-Bus (FlexRay)	8, 16, 32	√	√	√	√	√	√	√	√	√
FLXA0	FlexRay Write Data Section Register 19	FLXA0FRWRDS19	$0000\ 0000_H$	32	$1002\ 0448_H$	H-Bus (FlexRay)	8, 16, 32	√	√	√	√	√	√	√	√	√
FLXA0	FlexRay Write Data Section Register 20	FLXA0FRWRDS20	$0000\ 0000_H$	32	$1002\ 044C_H$	H-Bus (FlexRay)	8, 16, 32	√	√	√	√	√	√	√	√	√
FLXA0	FlexRay Write Data Section Register 21	FLXA0FRWRDS21	$0000\ 0000_H$	32	$1002\ 0450_H$	H-Bus (FlexRay)	8, 16, 32	√	√	√	√	√	√	√	√	√
FLXA0	FlexRay Write Data Section Register 22	FLXA0FRWRDS22	$0000\ 0000_H$	32	$1002\ 0454_H$	H-Bus (FlexRay)	8, 16, 32	√	√	√	√	√	√	√	√	√
FLXA0	FlexRay Write Data Section Register 23	FLXA0FRWRDS23	$0000\ 0000_H$	32	$1002\ 0458_H$	H-Bus (FlexRay)	8, 16, 32	√	√	√	√	√	√	√	√	√
FLXA0	FlexRay Write Data Section Register 24	FLXA0FRWRDS24	$0000\ 0000_H$	32	$1002\ 045C_H$	H-Bus (FlexRay)	8, 16, 32	√	√	√	√	√	√	√	√	√
FLXA0	FlexRay Write Data Section Register 25	FLXA0FRWRDS25	$0000\ 0000_H$	32	$1002\ 0460_H$	H-Bus (FlexRay)	8, 16, 32	√	√	√	√	√	√	√	√	√
FLXA0	FlexRay Write Data Section Register 26	FLXA0FRWRDS26	$0000\ 0000_H$	32	$1002\ 0464_H$	H-Bus (FlexRay)	8, 16, 32	√	√	√	√	√	√	√	√	√
FLXA0	FlexRay Write Data Section Register 27	FLXA0FRWRDS27	$0000\ 0000_H$	32	$1002\ 0468_H$	H-Bus (FlexRay)	8, 16, 32	√	√	√	√	√	√	√	√	√
FLXA0	FlexRay Write Data Section Register 28	FLXA0FRWRDS28	$0000\ 0000_H$	32	$1002\ 046C_H$	H-Bus (FlexRay)	8, 16, 32	√	√	√	√	√	√	√	√	√
FLXA0	FlexRay Write Data Section Register 29	FLXA0FRWRDS29	$0000\ 0000_H$	32	$1002\ 0470_H$	H-Bus (FlexRay)	8, 16, 32	√	√	√	√	√	√	√	√	√
FLXA0	FlexRay Write Data Section Register 30	FLXA0FRWRDS30	$0000\ 0000_H$	32	$1002\ 0474_H$	H-Bus (FlexRay)	8, 16, 32	√	√	√	√	√	√	√	√	√
FLXA0	FlexRay Write Data Section Register 31	FLXA0FRWRDS31	$0000\ 0000_H$	32	$1002\ 0478_H$	H-Bus (FlexRay)	8, 16, 32	√	√	√	√	√	√	√	√	√
FLXA0	FlexRay Write Data Section Register 32	FLXA0FRWRDS32	$0000\ 0000_H$	32	$1002\ 047C_H$	H-Bus (FlexRay)	8, 16, 32	√	√	√	√	√	√	√	√	√
FLXA0	FlexRay Write Data Section Register 33	FLXA0FRWRDS33	$0000\ 0000_H$	32	$1002\ 0480_H$	H-Bus (FlexRay)	8, 16, 32	√	√	√	√	√	√	√	√	√
FLXA0	FlexRay Write Data Section Register 34	FLXA0FRWRDS34	$0000\ 0000_H$	32	$1002\ 0484_H$	H-Bus (FlexRay)	8, 16, 32	√	√	√	√	√	√	√	√	√
FLXA0	FlexRay Write Data Section Register 35	FLXA0FRWRDS35	$0000\ 0000_H$	32	$1002\ 0488_H$	H-Bus (FlexRay)	8, 16, 32	√	√	√	√	√	√	√	√	√
FLXA0	FlexRay Write Data Section Register 36	FLXA0FRWRDS36	$0000\ 0000_H$	32	$1002\ 048C_H$	H-Bus (FlexRay)	8, 16, 32	√	√	√	√	√	√	√	√	√
FLXA0	FlexRay Write Data Section Register 37	FLXA0FRWRDS37	$0000\ 0000_H$	32	$1002\ 0490_H$	H-Bus (FlexRay)	8, 16, 32	√	√	√	√	√	√	√	√	√
FLXA0	FlexRay Write Data Section Register 38	FLXA0FRWRDS38	$0000\ 0000_H$	32	$1002\ 0494_H$	H-Bus (FlexRay)	8, 16, 32	√	√	√	√	√	√	√	√	√
FLXA0	FlexRay Write Data Section Register 39	FLXA0FRWRDS39	$0000\ 0000_H$	32	$1002\ 0498_H$	H-Bus (FlexRay)	8, 16, 32	√	√	√	√	√	√	√	√	√
FLXA0	FlexRay Write Data Section Register 40	FLXA0FRWRDS40	$0000\ 0000_H$	32	$1002\ 049C_H$	H-Bus (FlexRay)	8, 16, 32	√	√	√	√	√	√	√	√	√
FLXA0	FlexRay Write Data Section Register 41	FLXA0FRWRDS41	$0000\ 0000_H$	32	$1002\ 04A0_H$	H-Bus (FlexRay)	8, 16, 32	√	√	√	√	√	√	√	√	√
FLXA0	FlexRay Write Data Section Register 42	FLXA0FRWRDS42	$0000\ 0000_H$	32	$1002\ 04A4_H$	H-Bus (FlexRay)	8, 16, 32	√	√	√	√	√	√	√	√	√

Table A.1 List of Registers (5/124)

Module	Register	Symbol	Value after Reset	Number of Bits	Address	Peripheral IP group	Access Size	Reset Source*1							Access Authority*1	
								POCRES	CVMRES	EXTRES	DBRES	ECMRES	BISTRES	SWRES	SV	UM
FLXA0	FlexRay Write Data Section Register 43	FLXA0FRWRDS43	0000 0000H	32	1002 04A8H	H-Bus (FlexRay)	8, 16, 32	√	√	√	√	√	√	√	√	√
FLXA0	FlexRay Write Data Section Register 44	FLXA0FRWRDS44	0000 0000H	32	1002 04ACH	H-Bus (FlexRay)	8, 16, 32	√	√	√	√	√	√	√	√	√
FLXA0	FlexRay Write Data Section Register 45	FLXA0FRWRDS45	0000 0000H	32	1002 04B0H	H-Bus (FlexRay)	8, 16, 32	√	√	√	√	√	√	√	√	√
FLXA0	FlexRay Write Data Section Register 46	FLXA0FRWRDS46	0000 0000H	32	1002 04B4H	H-Bus (FlexRay)	8, 16, 32	√	√	√	√	√	√	√	√	√
FLXA0	FlexRay Write Data Section Register 47	FLXA0FRWRDS47	0000 0000H	32	1002 04B8H	H-Bus (FlexRay)	8, 16, 32	√	√	√	√	√	√	√	√	√
FLXA0	FlexRay Write Data Section Register 48	FLXA0FRWRDS48	0000 0000H	32	1002 04BCH	H-Bus (FlexRay)	8, 16, 32	√	√	√	√	√	√	√	√	√
FLXA0	FlexRay Write Data Section Register 49	FLXA0FRWRDS49	0000 0000H	32	1002 04C0H	H-Bus (FlexRay)	8, 16, 32	√	√	√	√	√	√	√	√	√
FLXA0	FlexRay Write Data Section Register 50	FLXA0FRWRDS50	0000 0000H	32	1002 04C4H	H-Bus (FlexRay)	8, 16, 32	√	√	√	√	√	√	√	√	√
FLXA0	FlexRay Write Data Section Register 51	FLXA0FRWRDS51	0000 0000H	32	1002 04C8H	H-Bus (FlexRay)	8, 16, 32	√	√	√	√	√	√	√	√	√
FLXA0	FlexRay Write Data Section Register 52	FLXA0FRWRDS52	0000 0000H	32	1002 04CCH	H-Bus (FlexRay)	8, 16, 32	√	√	√	√	√	√	√	√	√
FLXA0	FlexRay Write Data Section Register 53	FLXA0FRWRDS53	0000 0000H	32	1002 04D0H	H-Bus (FlexRay)	8, 16, 32	√	√	√	√	√	√	√	√	√
FLXA0	FlexRay Write Data Section Register 54	FLXA0FRWRDS54	0000 0000H	32	1002 04D4H	H-Bus (FlexRay)	8, 16, 32	√	√	√	√	√	√	√	√	√
FLXA0	FlexRay Write Data Section Register 55	FLXA0FRWRDS55	0000 0000H	32	1002 04D8H	H-Bus (FlexRay)	8, 16, 32	√	√	√	√	√	√	√	√	√
FLXA0	FlexRay Write Data Section Register 56	FLXA0FRWRDS56	0000 0000H	32	1002 04DCH	H-Bus (FlexRay)	8, 16, 32	√	√	√	√	√	√	√	√	√
FLXA0	FlexRay Write Data Section Register 57	FLXA0FRWRDS57	0000 0000H	32	1002 04E0H	H-Bus (FlexRay)	8, 16, 32	√	√	√	√	√	√	√	√	√
FLXA0	FlexRay Write Data Section Register 58	FLXA0FRWRDS58	0000 0000H	32	1002 04E4H	H-Bus (FlexRay)	8, 16, 32	√	√	√	√	√	√	√	√	√
FLXA0	FlexRay Write Data Section Register 59	FLXA0FRWRDS59	0000 0000H	32	1002 04E8H	H-Bus (FlexRay)	8, 16, 32	√	√	√	√	√	√	√	√	√
FLXA0	FlexRay Write Data Section Register 60	FLXA0FRWRDS60	0000 0000H	32	1002 04ECH	H-Bus (FlexRay)	8, 16, 32	√	√	√	√	√	√	√	√	√
FLXA0	FlexRay Write Data Section Register 61	FLXA0FRWRDS61	0000 0000H	32	1002 04F0H	H-Bus (FlexRay)	8, 16, 32	√	√	√	√	√	√	√	√	√
FLXA0	FlexRay Write Data Section Register 62	FLXA0FRWRDS62	0000 0000H	32	1002 04F4H	H-Bus (FlexRay)	8, 16, 32	√	√	√	√	√	√	√	√	√
FLXA0	FlexRay Write Data Section Register 63	FLXA0FRWRDS63	0000 0000H	32	1002 04F8H	H-Bus (FlexRay)	8, 16, 32	√	√	√	√	√	√	√	√	√
FLXA0	FlexRay Write Data Section Register 64	FLXA0FRWRDS64	0000 0000H	32	1002 04FCH	H-Bus (FlexRay)	8, 16, 32	√	√	√	√	√	√	√	√	√
FLXA0	FlexRay Write Header Section Register 1	FLXA0FRWRHS1	0000 0000H	32	1002 0500H	H-Bus (FlexRay)	8, 16, 32	√	√	√	√	√	√	√	√	√
FLXA0	FlexRay Write Header Section Register 2	FLXA0FRWRHS2	0000 0000H	32	1002 0504H	H-Bus (FlexRay)	8, 16, 32	√	√	√	√	√	√	√	√	√
FLXA0	FlexRay Write Header Section Register 3	FLXA0FRWRHS3	0000 0000H	32	1002 0508H	H-Bus (FlexRay)	8, 16, 32	√	√	√	√	√	√	√	√	√
FLXA0	FlexRay Input Buffer Command Mask Register	FLXA0FRIBCM	0000 0000H	32	1002 0510H	H-Bus (FlexRay)	8, 16, 32	√	√	√	√	√	√	√	√	√
FLXA0	FlexRay Input Buffer Command Request Register	FLXA0FRIBCR	0000 0000H	32	1002 0514H	H-Bus (FlexRay)	8, 16, 32	√	√	√	√	√	√	√	√	√
FLXA0	FlexRay Read Data Section Register 1	FLXA0FRRDDS1	0000 0000H	32	1002 0600H	H-Bus (FlexRay)	8, 16, 32	√	√	√	√	√	√	√	√	√
FLXA0	FlexRay Read Data Section Register 2	FLXA0FRRDDS2	0000 0000H	32	1002 0604H	H-Bus (FlexRay)	8, 16, 32	√	√	√	√	√	√	√	√	√
FLXA0	FlexRay Read Data Section Register 3	FLXA0FRRDDS3	0000 0000H	32	1002 0608H	H-Bus (FlexRay)	8, 16, 32	√	√	√	√	√	√	√	√	√
FLXA0	FlexRay Read Data Section Register 4	FLXA0FRRDDS4	0000 0000H	32	1002 060CH	H-Bus (FlexRay)	8, 16, 32	√	√	√	√	√	√	√	√	√
FLXA0	FlexRay Read Data Section Register 5	FLXA0FRRDDS5	0000 0000H	32	1002 0610H	H-Bus (FlexRay)	8, 16, 32	√	√	√	√	√	√	√	√	√
FLXA0	FlexRay Read Data Section Register 6	FLXA0FRRDDS6	0000 0000H	32	1002 0614H	H-Bus (FlexRay)	8, 16, 32	√	√	√	√	√	√	√	√	√
FLXA0	FlexRay Read Data Section Register 7	FLXA0FRRDDS7	0000 0000H	32	1002 0618H	H-Bus (FlexRay)	8, 16, 32	√	√	√	√	√	√	√	√	√
FLXA0	FlexRay Read Data Section Register 8	FLXA0FRRDDS8	0000 0000H	32	1002 061CH	H-Bus (FlexRay)	8, 16, 32	√	√	√	√	√	√	√	√	√

Table A.1 List of Registers (6/124)

Module	Register	Symbol	Value after Reset	Number of Bits	Address	Peripheral IP group	Access Size	Reset Source*1							Access Authority*1	
								POCRES	CVMRES	EXTRES	DBRES	ECMRES	BISTRES	SWRES	SV	UM
FLXA0	FlexRay Read Data Section Register 9	FLXA0FRRDDS9	0000 0000$_H$	32	1002 0620$_H$	H-Bus (FlexRay)	8, 16, 32	√	√	√	√	√	√	√	√	√
FLXA0	FlexRay Read Data Section Register 10	FLXA0FRRDDS10	0000 0000$_H$	32	1002 0624$_H$	H-Bus (FlexRay)	8, 16, 32	√	√	√	√	√	√	√	√	√
FLXA0	FlexRay Read Data Section Register 11	FLXA0FRRDDS11	0000 0000$_H$	32	1002 0628$_H$	H-Bus (FlexRay)	8, 16, 32	√	√	√	√	√	√	√	√	√
FLXA0	FlexRay Read Data Section Register 12	FLXA0FRRDDS12	0000 0000$_H$	32	1002 062C$_H$	H-Bus (FlexRay)	8, 16, 32	√	√	√	√	√	√	√	√	√
FLXA0	FlexRay Read Data Section Register 13	FLXA0FRRDDS13	0000 0000$_H$	32	1002 0630$_H$	H-Bus (FlexRay)	8, 16, 32	√	√	√	√	√	√	√	√	√
FLXA0	FlexRay Read Data Section Register 14	FLXA0FRRDDS14	0000 0000$_H$	32	1002 0634$_H$	H-Bus (FlexRay)	8, 16, 32	√	√	√	√	√	√	√	√	√
FLXA0	FlexRay Read Data Section Register 15	FLXA0FRRDDS15	0000 0000$_H$	32	1002 0638$_H$	H-Bus (FlexRay)	8, 16, 32	√	√	√	√	√	√	√	√	√
FLXA0	FlexRay Read Data Section Register 16	FLXA0FRRDDS16	0000 0000$_H$	32	1002 063C$_H$	H-Bus (FlexRay)	8, 16, 32	√	√	√	√	√	√	√	√	√
FLXA0	FlexRay Read Data Section Register 17	FLXA0FRRDDS17	0000 0000$_H$	32	1002 0640$_H$	H-Bus (FlexRay)	8, 16, 32	√	√	√	√	√	√	√	√	√
FLXA0	FlexRay Read Data Section Register 18	FLXA0FRRDDS18	0000 0000$_H$	32	1002 0644$_H$	H-Bus (FlexRay)	8, 16, 32	√	√	√	√	√	√	√	√	√
FLXA0	FlexRay Read Data Section Register 19	FLXA0FRRDDS19	0000 0000$_H$	32	1002 0648$_H$	H-Bus (FlexRay)	8, 16, 32	√	√	√	√	√	√	√	√	√
FLXA0	FlexRay Read Data Section Register 20	FLXA0FRRDDS20	0000 0000$_H$	32	1002 064C$_H$	H-Bus (FlexRay)	8, 16, 32	√	√	√	√	√	√	√	√	√
FLXA0	FlexRay Read Data Section Register 21	FLXA0FRRDDS21	0000 0000$_H$	32	1002 0650$_H$	H-Bus (FlexRay)	8, 16, 32	√	√	√	√	√	√	√	√	√
FLXA0	FlexRay Read Data Section Register 22	FLXA0FRRDDS22	0000 0000$_H$	32	1002 0654$_H$	H-Bus (FlexRay)	8, 16, 32	√	√	√	√	√	√	√	√	√
FLXA0	FlexRay Read Data Section Register 23	FLXA0FRRDDS23	0000 0000$_H$	32	1002 0658$_H$	H-Bus (FlexRay)	8, 16, 32	√	√	√	√	√	√	√	√	√
FLXA0	FlexRay Read Data Section Register 24	FLXA0FRRDDS24	0000 0000$_H$	32	1002 065C$_H$	H-Bus (FlexRay)	8, 16, 32	√	√	√	√	√	√	√	√	√
FLXA0	FlexRay Read Data Section Register 25	FLXA0FRRDDS25	0000 0000$_H$	32	1002 0660$_H$	H-Bus (FlexRay)	8, 16, 32	√	√	√	√	√	√	√	√	√
FLXA0	FlexRay Read Data Section Register 26	FLXA0FRRDDS26	0000 0000$_H$	32	1002 0664$_H$	H-Bus (FlexRay)	8, 16, 32	√	√	√	√	√	√	√	√	√
FLXA0	FlexRay Read Data Section Register 27	FLXA0FRRDDS27	0000 0000$_H$	32	1002 0668$_H$	H-Bus (FlexRay)	8, 16, 32	√	√	√	√	√	√	√	√	√
FLXA0	FlexRay Read Data Section Register 28	FLXA0FRRDDS28	0000 0000$_H$	32	1002 066C$_H$	H-Bus (FlexRay)	8, 16, 32	√	√	√	√	√	√	√	√	√
FLXA0	FlexRay Read Data Section Register 29	FLXA0FRRDDS29	0000 0000$_H$	32	1002 0670$_H$	H-Bus (FlexRay)	8, 16, 32	√	√	√	√	√	√	√	√	√
FLXA0	FlexRay Read Data Section Register 30	FLXA0FRRDDS30	0000 0000$_H$	32	1002 0674$_H$	H-Bus (FlexRay)	8, 16, 32	√	√	√	√	√	√	√	√	√
FLXA0	FlexRay Read Data Section Register 31	FLXA0FRRDDS31	0000 0000$_H$	32	1002 0678$_H$	H-Bus (FlexRay)	8, 16, 32	√	√	√	√	√	√	√	√	√
FLXA0	FlexRay Read Data Section Register 32	FLXA0FRRDDS32	0000 0000$_H$	32	1002 067C$_H$	H-Bus (FlexRay)	8, 16, 32	√	√	√	√	√	√	√	√	√
FLXA0	FlexRay Read Data Section Register 33	FLXA0FRRDDS33	0000 0000$_H$	32	1002 0680$_H$	H-Bus (FlexRay)	8, 16, 32	√	√	√	√	√	√	√	√	√
FLXA0	FlexRay Read Data Section Register 34	FLXA0FRRDDS34	0000 0000$_H$	32	1002 0684$_H$	H-Bus (FlexRay)	8, 16, 32	√	√	√	√	√	√	√	√	√
FLXA0	FlexRay Read Data Section Register 35	FLXA0FRRDDS35	0000 0000$_H$	32	1002 0688$_H$	H-Bus (FlexRay)	8, 16, 32	√	√	√	√	√	√	√	√	√
FLXA0	FlexRay Read Data Section Register 36	FLXA0FRRDDS36	0000 0000$_H$	32	1002 068C$_H$	H-Bus (FlexRay)	8, 16, 32	√	√	√	√	√	√	√	√	√
FLXA0	FlexRay Read Data Section Register 37	FLXA0FRRDDS37	0000 0000$_H$	32	1002 0690$_H$	H-Bus (FlexRay)	8, 16, 32	√	√	√	√	√	√	√	√	√
FLXA0	FlexRay Read Data Section Register 38	FLXA0FRRDDS38	0000 0000$_H$	32	1002 0694$_H$	H-Bus (FlexRay)	8, 16, 32	√	√	√	√	√	√	√	√	√
FLXA0	FlexRay Read Data Section Register 39	FLXA0FRRDDS39	0000 0000$_H$	32	1002 0698$_H$	H-Bus (FlexRay)	8, 16, 32	√	√	√	√	√	√	√	√	√
FLXA0	FlexRay Read Data Section Register 40	FLXA0FRRDDS40	0000 0000$_H$	32	1002 069C$_H$	H-Bus (FlexRay)	8, 16, 32	√	√	√	√	√	√	√	√	√
FLXA0	FlexRay Read Data Section Register 41	FLXA0FRRDDS41	0000 0000$_H$	32	1002 06A0$_H$	H-Bus (FlexRay)	8, 16, 32	√	√	√	√	√	√	√	√	√
FLXA0	FlexRay Read Data Section Register 42	FLXA0FRRDDS42	0000 0000$_H$	32	1002 06A4$_H$	H-Bus (FlexRay)	8, 16, 32	√	√	√	√	√	√	√	√	√
FLXA0	FlexRay Read Data Section Register 43	FLXA0FRRDDS43	0000 0000$_H$	32	1002 06A8$_H$	H-Bus (FlexRay)	8, 16, 32	√	√	√	√	√	√	√	√	√

Table A.1 List of Registers (7/124)

Module	Register	Symbol	Value after Reset	Number of Bits	Address	Peripheral IP group	Access Size	Reset Source*1							Access Authority*1	
								POCRES	CVMRES	EXTRES	DBRES	ECMRES	BISTRES	SWRES	SV	UM
FLXA0	FlexRay Read Data Section Register 44	FLXA0FRRDDS44	0000 0000$_H$	32	1002 06AC$_H$	H-Bus (FlexRay)	8, 16, 32	√	√	√	√	√	√	√	√	√
FLXA0	FlexRay Read Data Section Register 45	FLXA0FRRDDS45	0000 0000$_H$	32	1002 06B0$_H$	H-Bus (FlexRay)	8, 16, 32	√	√	√	√	√	√	√	√	√
FLXA0	FlexRay Read Data Section Register 46	FLXA0FRRDDS46	0000 0000$_H$	32	1002 06B4$_H$	H-Bus (FlexRay)	8, 16, 32	√	√	√	√	√	√	√	√	√
FLXA0	FlexRay Read Data Section Register 47	FLXA0FRRDDS47	0000 0000$_H$	32	1002 06B8$_H$	H-Bus (FlexRay)	8, 16, 32	√	√	√	√	√	√	√	√	√
FLXA0	FlexRay Read Data Section Register 48	FLXA0FRRDDS48	0000 0000$_H$	32	1002 06BC$_H$	H-Bus (FlexRay)	8, 16, 32	√	√	√	√	√	√	√	√	√
FLXA0	FlexRay Read Data Section Register 49	FLXA0FRRDDS49	0000 0000$_H$	32	1002 06C0$_H$	H-Bus (FlexRay)	8, 16, 32	√	√	√	√	√	√	√	√	√
FLXA0	FlexRay Read Data Section Register 50	FLXA0FRRDDS50	0000 0000$_H$	32	1002 06C4$_H$	H-Bus (FlexRay)	8, 16, 32	√	√	√	√	√	√	√	√	√
FLXA0	FlexRay Read Data Section Register 51	FLXA0FRRDDS51	0000 0000$_H$	32	1002 06C8$_H$	H-Bus (FlexRay)	8, 16, 32	√	√	√	√	√	√	√	√	√
FLXA0	FlexRay Read Data Section Register 52	FLXA0FRRDDS52	0000 0000$_H$	32	1002 06CC$_H$	H-Bus (FlexRay)	8, 16, 32	√	√	√	√	√	√	√	√	√
FLXA0	FlexRay Read Data Section Register 53	FLXA0FRRDDS53	0000 0000$_H$	32	1002 06D0$_H$	H-Bus (FlexRay)	8, 16, 32	√	√	√	√	√	√	√	√	√
FLXA0	FlexRay Read Data Section Register 54	FLXA0FRRDDS54	0000 0000$_H$	32	1002 06D4$_H$	H-Bus (FlexRay)	8, 16, 32	√	√	√	√	√	√	√	√	√
FLXA0	FlexRay Read Data Section Register 55	FLXA0FRRDDS55	0000 0000$_H$	32	1002 06D8$_H$	H-Bus (FlexRay)	8, 16, 32	√	√	√	√	√	√	√	√	√
FLXA0	FlexRay Read Data Section Register 56	FLXA0FRRDDS56	0000 0000$_H$	32	1002 06DC$_H$	H-Bus (FlexRay)	8, 16, 32	√	√	√	√	√	√	√	√	√
FLXA0	FlexRay Read Data Section Register 57	FLXA0FRRDDS57	0000 0000$_H$	32	1002 06E0$_H$	H-Bus (FlexRay)	8, 16, 32	√	√	√	√	√	√	√	√	√
FLXA0	FlexRay Read Data Section Register 58	FLXA0FRRDDS58	0000 0000$_H$	32	1002 06E4$_H$	H-Bus (FlexRay)	8, 16, 32	√	√	√	√	√	√	√	√	√
FLXA0	FlexRay Read Data Section Register 59	FLXA0FRRDDS59	0000 0000$_H$	32	1002 06E8$_H$	H-Bus (FlexRay)	8, 16, 32	√	√	√	√	√	√	√	√	√
FLXA0	FlexRay Read Data Section Register 60	FLXA0FRRDDS60	0000 0000$_H$	32	1002 06EC$_H$	H-Bus (FlexRay)	8, 16, 32	√	√	√	√	√	√	√	√	√
FLXA0	FlexRay Read Data Section Register 61	FLXA0FRRDDS61	0000 0000$_H$	32	1002 06F0$_H$	H-Bus (FlexRay)	8, 16, 32	√	√	√	√	√	√	√	√	√
FLXA0	FlexRay Read Data Section Register 62	FLXA0FRRDDS62	0000 0000$_H$	32	1002 06F4$_H$	H-Bus (FlexRay)	8, 16, 32	√	√	√	√	√	√	√	√	√
FLXA0	FlexRay Read Data Section Register 63	FLXA0FRRDDS63	0000 0000$_H$	32	1002 06F8$_H$	H-Bus (FlexRay)	8, 16, 32	√	√	√	√	√	√	√	√	√
FLXA0	FlexRay Read Data Section Register 64	FLXA0FRRDDS64	0000 0000$_H$	32	1002 06FC$_H$	H-Bus (FlexRay)	8, 16, 32	√	√	√	√	√	√	√	√	√
FLXA0	FlexRay Read Header Section Register 1	FLXA0FRRDHS1	0000 0000$_H$	32	1002 0700$_H$	H-Bus (FlexRay)	8, 16, 32	√	√	√	√	√	√	√	√	√
FLXA0	FlexRay Read Header Section Register 2	FLXA0FRRDHS2	0000 0000$_H$	32	1002 0704$_H$	H-Bus (FlexRay)	8, 16, 32	√	√	√	√	√	√	√	√	√
FLXA0	FlexRay Read Header Section Register 3	FLXA0FRRDHS3	0000 0000$_H$	32	1002 0708$_H$	H-Bus (FlexRay)	8, 16, 32	√	√	√	√	√	√	√	√	√
FLXA0	FlexRay Message Buffer Status Register	FLXA0FRMBS	0000 0000$_H$	32	1002 070C$_H$	H-Bus (FlexRay)	8, 16, 32	√	√	√	√	√	√	√	√	√
FLXA0	FlexRay Output Buffer Command Mask Register	FLXA0FROBCM	0000 0000$_H$	32	1002 0710$_H$	H-Bus (FlexRay)	8, 16, 32	√	√	√	√	√	√	√	√	√
FLXA0	FlexRay Output Buffer Command Request Register	FLXA0FROBCR	0000 0000$_H$	32	1002 0714$_H$	H-Bus (FlexRay)	8, 16, 32	√	√	√	√	√	√	√	√	√
FLXA0	FlexRay Input Transfer Configuration Register	FLXA0FRITC	0000 0000$_H$	32	1002 0800$_H$	H-Bus (FlexRay)	8, 16, 32	√	√	√	√	√	√	√	√	√
FLXA0	FlexRay Output Transfer Configuration Register	FLXA0FROTC	0000 0000$_H$	32	1002 0804$_H$	H-Bus (FlexRay)	8, 16, 32	√	√	√	√	√	√	√	√	√
FLXA0	FlexRay Input pointer table Base Address Register	FLXA0FRIBA	0000 0000$_H$	32	1002 0808$_H$	H-Bus (FlexRay)	8, 16, 32	√	√	√	√	√	√	√	√	√
FLXA0	FlexRay FIFO pointer table Base Address Register	FLXA0FRFBA	0000 0000$_H$	32	1002 080C$_H$	H-Bus (FlexRay)	8, 16, 32	√	√	√	√	√	√	√	√	√
FLXA0	FlexRay Output pointer table Base Address Register	FLXA0FROBA	0000 0000$_H$	32	1002 0810$_H$	H-Bus (FlexRay)	8, 16, 32	√	√	√	√	√	√	√	√	√
FLXA0	FlexRay Input Queue Control Register	FLXA0FRIQC	0000 0000$_H$	32	1002 0814$_H$	H-Bus (FlexRay)	8, 16, 32	√	√	√	√	√	√	√	√	√
FLXA0	FlexRay User Input transfer Request Register	FLXA0FRUIR	0000 0000$_H$	32	1002 0818$_H$	H-Bus (FlexRay)	8, 16, 32	√	√	√	√	√	√	√	√	√
FLXA0	FlexRay User Output transfer Request Register	FLXA0FRUOR	0000 0000$_H$	32	1002 081C$_H$	H-Bus (FlexRay)	8, 16, 32	√	√	√	√	√	√	√	√	√

Table A.1 List of Registers (8/124)

Module	Register	Symbol	Value after Reset	Number of Bits	Address	Peripheral IP group	Access Size	Reset Source*1							Access Authority*1	
								POCRES	CVMRES	EXTRES	DBRES	ECMRES	BISTRES	SWRES	SV	UM
FLXA0	FlexRay Input Transfer Status Register	FLXA0FRITS	$0000\ 0000_H$	32	$1002\ 0820_H$	H-Bus (FlexRay)	8, 16, 32	√	√	√	√	√	√	√	√	√
FLXA0	FlexRay Output Transfer Status Register	FLXA0FROTS	$0000\ 0000_H$	32	$1002\ 0824_H$	H-Bus (FlexRay)	8, 16, 32	√	√	√	√	√	√	√	√	√
FLXA0	FlexRay Access Error Status Register	FLXA0FRAES	$0000\ 0000_H$	32	$1002\ 0828_H$	H-Bus (FlexRay)	8, 16, 32	√	√	√	√	√	√	√	√	√
FLXA0	FlexRay Access Error Address Register	FLXA0FRAEA	$0000\ 0000_H$	32	$1002\ 082C_H$	H-Bus (FlexRay)	8, 16, 32	√	√	√	√	√	√	√	√	√
FLXA0	FlexRay message Data Available Register 0	FLXA0FRDA0	$0000\ 0000_H$	32	$1002\ 0830_H$	H-Bus (FlexRay)	8, 16, 32	√	√	√	√	√	√	√	√	√
FLXA0	FlexRay message Data Available Register 1	FLXA0FRDA1	$0000\ 0000_H$	32	$1002\ 0834_H$	H-Bus (FlexRay)	8, 16, 32	√	√	√	√	√	√	√	√	√
FLXA0	FlexRay message Data Available Register 2	FLXA0FRDA2	$0000\ 0000_H$	32	$1002\ 0838_H$	H-Bus (FlexRay)	8, 16, 32	√	√	√	√	√	√	√	√	√
FLXA0	FlexRay message Data Available Register 3	FLXA0FRDA3	$0000\ 0000_H$	32	$1002\ 083C_H$	H-Bus (FlexRay)	8, 16, 32	√	√	√	√	√	√	√	√	√
FLXA0	FlexRay H-Bus Configuration Register	FLXA0FRAHBC	$0000\ 0000_H$	32	$1002\ 0840_H$	H-Bus (FlexRay)	8, 16, 32	√	√	√	√	√	√	√	√	√
FLXA0	FlexRay Timer 2 Configuration Register	FLXA0FRT2C	$0000\ 0000_H$	32	$1002\ 0844_H$	H-Bus (FlexRay)	8, 16, 32	√	√	√	√	√	√	√	√	√
AUD	AUDR message board register	AUDMBR	0000_H	16	$FA00\ 5004_H$	CPU (DEBUG)	16	√	√	√	√	√	√	√	√	√
AUD	AUDR message board register	AUDMBRC	0000_H	16	$FA00\ 5008_H$	CPU (DEBUG)	16	√	√	√	√	√	√	√	√	√
FLMD	FLMDCNT Register	FLMDCNT	$0000\ 0000_H$	32	$FFA0\ 0000_H$	3	32	√	√	√	√	√	√	√	√	√
FLMD	FLMD Write-Protection Command Register	FLMDPCMD	$0000\ 0000_H$	32	$FFA0\ 0004_H$	3	32	√	√	√	√	√	√	√	√	√
FLMD	FLMD Write Sequence Status Register	FLMDPS	$0000\ 0000_H$	32	$FFA0\ 0008_H$	3	32	√	√	√	√	√	√	√	√	√
FLASH	Self-programming ID input register 0	SELFID0	$0000\ 0000_H$	32	$FFA0\ 8000_H$	3	32	√	√	√	√	√	√	√	√	√
FLASH	Self-programming ID input register 0	SELFID1	$0000\ 0000_H$	32	$FFA0\ 8004_H$	3	32	√	√	√	√	√	√	√	√	√
FLASH	Self-programming ID input register 0	SELFID2	$0000\ 0000_H$	32	$FFA0\ 8008_H$	3	32	√	√	√	√	√	√	√	√	√
FLASH	Self-programming ID input register 0	SELFID3	$0000\ 0000_H$	32	$FFA0\ 800C_H$	3	32	√	√	√	√	√	√	√	√	√
FLASH	Self-programming ID authentication status register	SELFIDST	$0000\ 000X_H$	32	$FFA0\ 8010_H$	3	8, 16, 32	√	√	√	√	√	√	√	√	√
FACI	Flash pin monitoring register	FPMON	The value depends on the state of the FLMD0 pin.	8	$FFA1\ 0000_H$	3	8	√	√	√	√	√	√	—	√	√
FACI	Flash access status register	FASTAT	00_H	8	$FFA1\ 0010_H$	3	8	√	√	√	√	√	√	—	√	√
FACI	Flash access error interrupt enable register	FAEINT	99_H	8	$FFA1\ 0014_H$	3	8	√	√	√	√	√	√	—	√	√
FACI	Code Flash memory area selecting register	FAREASELC	0000_H	16	$FFA1\ 002_{H0}$	3	16	√	√	√	√	√	√	—	√	√
FACI	FACI command processing start address register	FSADDR	$0000\ 0000_H$	32	$FFA1\ 0030_H$	3	32	√	√	√	√	√	√	—	√	√
FACI	FACI command processing end address register	FEADDR	$0000\ 0000_H$	32	$FFA1\ 0034_H$	3	32	√	√	√	√	√	√	—	√	√
FACI	FCURAM enable register	FCURAME	0000_H	16	$FFA1\ 0054_H$	3	16	√	√	√	√	√	√	—	√	√
FACI	Flash status register	FSTATR	$0000\ 8000_H$	32	$FFA1\ 0080_H$	3	8, 16, 32	√	√	√	√	√	√	—	√	√
FACI	Flash P/E protection register	FENTRYR	0000_H	16	$FFA1\ 0084_H$	3	16	√	√	√	√	√	√	—	√	√
FACI	Code Flash protection register	FPROTR	0000_H	16	$FFA1\ 0088_H$	3	16	√	√	√	√	√	√	—	√	√
FACI	Flash sequencer configuration initializing register	FSUINITR	0000_H	16	$FFA1\ 008C_H$	3	16	√	√	√	√	√	√	—	√	√
FACI	Lock bit status register	FLKSTAT	00_H	8	$FFA1\ 0090_H$	3	8	√	√	√	√	√	√	—	√	√
FACI	FCURAM first error address register	FRFSTEADR	$0000\ 0000_H$	32	$FFA1\ 0094_H$	3	32	√	√	√	√	√	√	—	√	√
FACI	FACI reset transfer status register	FRTSTAT	The value depends on the state of the FLMD0 pin.	8	$FFA1\ 0098_H$	3	8	√	√	√	√	√	√	—	√	√
FACI	FACI reset transfer error interrupt enable register	FRTEINT	03_H	8	$FFA1\ 009C_H$	3	8	√	√	√	√	√	√	—	√	√
FACI	FACI command register	FCMDR	$FFFF_H$	16	$FFA1\ 00A0_H$	3	16	√	√	√	√	√	√	—	√	√
FACI	FCURAM ECC control register	FRAMECCR	0000_H	16	$FFA1\ 00B0_H$	3	16	√	√	√	√	√	√	—	√	√
FACI	Flash P/E status register	FPESTAT	0000_H	16	$FFA1\ 00C0_H$	3	16	√	√	√	√	√	√	—	√	√
FACI	Data Flash blank check control register	FBCCNT	00_H	8	$FFA1\ 00D0_H$	3	8	√	√	√	√	√	√	—	√	√
FACI	Data Flash blank check status register	FBCSTAT	00_H	8	$FFA1\ 00D4_H$	3	8	√	√	√	√	√	√	—	√	√
FACI	Data Flash programming start address register	FPSADDR	$0000\ 0000_H$	32	$FFA1\ 00D8_H$	3	32	√	√	√	√	√	√	—	√	√
FACI	Flash sequencer process switching register	FCPSR	0000_H	16	$FFA1\ 00E0_H$	3	16	√	√	√	√	√	√	—	√	√
FACI	Flash sequencer process clock notification register	FPCKAR	$00FF_H$	16	$FFA1\ 00E4_H$	3	16	√	√	√	√	√	√	—	√	√
FACI	Flash emulation control register	FLEMU	00_H	8	$FFA1\ 00F0_H$	3	8	√	√	√	√	√	√	—	√	√

Table A.1 List of Registers (9/124)

Module	Register	Symbol	Value after Reset	Number of Bits	Address	Peripheral IP group	Access Size	Reset Source*1							Access Authority*1	
								POCRES	CVMRES	EXTRES	DBRES	ECMRES	BISTRES	SWRES	SV	UM
FACI	Flash emulation address specifying register	FLEAD	$0000\ 0000_H$	32	$FFA1\ 00F4_H$	3	32	√	√	√	√	√	√	—	√	√
FACI	Flash ECC encoder monitoring register	FECCEMON	$FFFF_H$	16	$FFA1\ 0100_H$	3	16	√	√	√	√	√	√	—	√	√
FACI	Flash ECC test mode register	FECCTMD	0030_H	16	$FFA1\ 0104_H$	3	16	√	√	√	√	√	√	—	√	√
FACI	Flash dummy ECC register	FDMYECC	$FFFF_H$	16	$FFA1\ 0108_H$	3	16	√	√	√	√	√	√	—	√	√
SINT	FCU firm area selecting register	SINTR0	00_H	8	$FFC0\ 0000_H$	3	8	√	√	√	√	√	√	√	√	√
SINT	Software interrupt register 1	SINTR1	00_H	8	$FFC0\ 0004_H$	3	8	√	√	√	√	√	√	√	√	√
SINT	Software interrupt register 2	SINTR2	00_H	8	$FFC0\ 0008_H$	3	8	√	√	√	√	√	√	√	√	√
SINT	Software interrupt register 3	SINTR3	00_H	8	$FFC0\ 000C_H$	3	8	√	√	√	√	√	√	√	√	√
SINT	Software interrupt register 4	SINTR4	00_H	8	$FFC0\ 0010_H$	3	8	√	√	√	√	√	√	√	√	√
BRAM	Backup register 0	BRAMDAT0	Data is retained.	32	$FFC0\ A000_H$	3	32	—	—	—	—	—	—	—	√	√
BRAM	Backup register 1	BRAMDAT1	Data is retained.	32	$FFC0\ A004_H$	3	32	—	—	—	—	—	—	—	√	√
BRAM	Backup register 2	BRAMDAT2	Data is retained.	32	$FFC0\ A008_H$	3	32	—	—	—	—	—	—	—	√	√
BRAM	Backup register 3	BRAMDAT3	Data is retained.	32	$FFC0\ A00C_H$	3	32	—	—	—	—	—	—	—	√	√
PORT	Port register	P0	0000_H	16	$FFC1\ 0000_H$	3	16	√	√	√	√	√	√	√	√	√
PORT	Port set/reset register	PSR0	$0000\ 0000_H$	32	$FFC1\ 0004_H$	3	32	√	√	√	√	√	√	√	√	√
PORT	Port NOT register	PNOT0	0000_H	16	$FFC1\ 0008_H$	3	16	√	√	√	√	√	√	√	√	√
PORT	Port pin read register	PPR0	0000_H	16	$FFC1\ 000C_H$	3	16	√	√	√	√	√	√	√	√	√
PORT	Port mode register	PM0	$FBFF_H$	16	$FFC1\ 0010_H$	3	16	√	√	√	√	√	√	√	√	√
PORT	Port mode control register	PMC0	0000_H	16	$FFC1\ 0014_H$	3	16	√	√	√	√	√	√	√	√	√
PORT	Port function control register	PFC0	0000_H	16	$FFC1\ 0018_H$	3	16	√	√	√	√	√	√	√	√	√
PORT	Port function control expansion register	PFCE0	0000_H	16	$FFC1\ 001C_H$	3	16	√	√	√	√	√	√	√	√	√
PORT	Port mode set/reset register	PMSR0	$0000\ FBFF_H$	32	$FFC1\ 0020_H$	3	32	√	√	√	√	√	√	√	√	√
PORT	Port mode control set/reset register	PMCSR0	$0000\ 0000_H$	32	$FFC1\ 0024_H$	3	32	√	√	√	√	√	√	√	√	√
PORT	Port function control addition expansion register	PFCAE0	0000_H	16	$FFC1\ 0028_H$	3	16	√	√	√	√	√	√	√	√	√
PORT	Port output level inversion register	PINV0	$0000\ 0000_H$	32	$FFC1\ 0030_H$	3	32	√	√	√	√	√	√	√	√	√
PORT	Port register	P1	0000_H	16	$FFC1\ 0040_H$	3	16	√	√	√	√	√	√	√	√	√
PORT	Port set/reset register	PSR1	$0000\ 0000_H$	32	$FFC1\ 0044_H$	3	32	√	√	√	√	√	√	√	√	√
PORT	Port NOT register	PNOT1	0000_H	16	$FFC1\ 0048_H$	3	16	√	√	√	√	√	√	√	√	√
PORT	Port pin read register	PPR1	0000_H	16	$FFC1\ 004C_H$	3	16	√	√	√	√	√	√	√	√	√
PORT	Port mode register	PM1	$FFFF_H$	16	$FFC1\ 0050_H$	3	16	√	√	√	√	√	√	√	√	√
PORT	Port mode control register	PMC1	0000_H	16	$FFC1\ 0054_H$	3	16	√	√	√	√	√	√	√	√	√
PORT	Port function control register	PFC1	0000_H	16	$FFC1\ 0058_H$	3	16	√	√	√	√	√	√	√	√	√
PORT	Port function control expansion register	PFCE1	0000_H	16	$FFC1\ 005C_H$	3	16	√	√	√	√	√	√	√	√	√
PORT	Port mode set/reset register	PMSR1	$0000\ FFFF_H$	32	$FFC1\ 0060_H$	3	32	√	√	√	√	√	√	√	√	√
PORT	Port mode control set/reset register	PMCSR1	$0000\ 0000_H$	32	$FFC1\ 0064_H$	3	32	√	√	√	√	√	√	√	√	√
PORT	Port function control addition expansion register	PFCAE1	0000_H	16	$FFC1\ 0068_H$	3	16	√	√	√	√	√	√	√	√	√
PORT	Port output level inversion register	PINV1	$0000\ 0000_H$	32	$FFC1\ 0070_H$	3	32	√	√	√	√	√	√	√	√	√
PORT	Port register	P2	0000_H	16	$FFC1\ 0080_H$	3	16	√	√	√	√	√	√	√	√	√
PORT	Port set/reset register	PSR2	$0000\ 0000_H$	32	$FFC1\ 0084_H$	3	32	√	√	√	√	√	√	√	√	√
PORT	Port NOT register	PNOT2	0000_H	16	$FFC1\ 0088_H$	3	16	√	√	√	√	√	√	√	√	√
PORT	Port pin read register	PPR2	0000_H	16	$FFC1\ 008C_H$	3	16	√	√	√	√	√	√	√	√	√
PORT	Port mode register	PM2	$FFFF_H$	16	$FFC1\ 0090_H$	3	16	√	√	√	√	√	√	√	√	√
PORT	Port mode control register	PMC2	0000_H	16	$FFC1\ 0094_H$	3	16	√	√	√	√	√	√	√	√	√
PORT	Port function control register	PFC2	0000_H	16	$FFC1\ 0098_H$	3	16	√	√	√	√	√	√	√	√	√
PORT	Port function control expansion register	PFCE2	0000_H	16	$FFC1\ 009C_H$	3	16	√	√	√	√	√	√	√	√	√
PORT	Port mode set/reset register	PMSR2	$0000\ FFFF_H$	32	$FFC1\ 00A0_H$	3	32	√	√	√	√	√	√	√	√	√
PORT	Port mode control set/reset register	PMCSR2	$0000\ 0000_H$	32	$FFC1\ 00A4_H$	3	32	√	√	√	√	√	√	√	√	√
PORT	Port function control addition expansion register	PFCAE2	0000_H	16	$FFC1\ 00A8_H$	3	16	√	√	√	√	√	√	√	√	√
PORT	Port output level inversion register	PINV2	$0000\ 0000_H$	32	$FFC1\ 00B0_H$	3	32	√	√	√	√	√	√	√	√	√
PORT	Port register	P3	0000_H	16	$FFC1\ 00C0_H$	3	16	√	√	√	√	√	√	√	√	√
PORT	Port set/reset register	PSR3	$0000\ 0000_H$	32	$FFC1\ 00C4_H$	3	32	√	√	√	√	√	√	√	√	√
PORT	Port NOT register	PNOT3	0000_H	16	$FFC1\ 00C8_H$	3	16	√	√	√	√	√	√	√	√	√
PORT	Port pin read register	PPR3	0000_H	16	$FFC1\ 00CC_H$	3	16	√	√	√	√	√	√	√	√	√

Table A.1 List of Registers (10/124)

Module	Register	Symbol	Value after Reset	Number of Bits	Address	Peripheral IP group	Access Size	Reset Source*1							Access Authority*1	
								POCRES	CVMRES	EXTRES	DBRES	ECMRES	BISTRES	SWRES	SV	UM
PORT	Port mode register	PM3	$FFFF_H$	16	$FFC1\ 00D0_H$	3	16	√	√	√	√	√	√	√	√	√
PORT	Port mode control register	PMC3	0000_H	16	$FFC1\ 00D4_H$	3	16	√	√	√	√	√	√	√	√	√
PORT	Port function control register	PFC3	0000_H	16	$FFC1\ 00D8_H$	3	16	√	√	√	√	√	√	√	√	√
PORT	Port function control expansion register	PFCE3	0000_H	16	$FFC1\ 00DC_H$	3	16	√	√	√	√	√	√	√	√	√
PORT	Port mode set/reset register	PMSR3	$0000\ FFFF_H$	32	$FFC1\ 00E0_H$	3	32	√	√	√	√	√	√	√	√	√
PORT	Port mode control set/reset register	PMCSR3	$0000\ 0000_H$	32	$FFC1\ 00E4_H$	3	32	√	√	√	√	√	√	√	√	√
PORT	Port function control addition expansion register	PFCAE3	0000_H	16	$FFC1\ 00E8_H$	3	16	√	√	√	√	√	√	√	√	√
PORT	Port output level inversion register	PINV3	$0000\ 0000_H$	32	$FFC1\ 00F0_H$	3	32	√	√	√	√	√	√	√	√	√
PORT	Port register	P4	0000_H	16	$FFC1\ 0100_H$	3	16	√	√	√	√	√	√	√	√	√
PORT	Port set/reset register	PSR4	$0000\ 0000_H$	32	$FFC1\ 0104_H$	3	32	√	√	√	√	√	√	√	√	√
PORT	Port NOT register	PNOT4	0000_H	16	$FFC1\ 0108_H$	3	16	√	√	√	√	√	√	√	√	√
PORT	Port pin read register	PPR4	0000_H	16	$FFC1\ 010C_H$	3	16	√	√	√	√	√	√	√	√	√
PORT	Port mode register	PM4	$FFFF_H$	16	$FFC1\ 0110_H$	3	16	√	√	√	√	√	√	√	√	√
PORT	Port mode control register	PMC4	0000_H	16	$FFC1\ 0114_H$	3	16	√	√	√	√	√	√	√	√	√
PORT	Port function control register	PFC4	0000_H	16	$FFC1\ 0118_H$	3	16	√	√	√	√	√	√	√	√	√
PORT	Port function control expansion register	PFCE4	0000_H	16	$FFC1\ 011C_H$	3	16	√	√	√	√	√	√	√	√	√
PORT	Port mode set/reset register	PMSR4	$0000\ FFFF_H$	32	$FFC1\ 0120_H$	3	32	√	√	√	√	√	√	√	√	√
PORT	Port mode control set/reset register	PMCSR4	$0000\ 0000_H$	32	$FFC1\ 0124_H$	3	32	√	√	√	√	√	√	√	√	√
PORT	Port function control addition expansion register	PFCAE4	0000_H	16	$FFC1\ 0128_H$	3	16	√	√	√	√	√	√	√	√	√
PORT	Port output level inversion register	PINV4	$0000\ 0000_H$	32	$FFC1\ 0130_H$	3	32	√	√	√	√	√	√	√	√	√
PORT	Port register	P5	0000_H	16	$FFC1\ 0140_H$	3	16	√	√	√	√	√	√	√	√	√
PORT	Port set/reset register	PSR5	$0000\ 0000_H$	32	$FFC1\ 0144_H$	3	32	√	√	√	√	√	√	√	√	√
PORT	Port NOT register	PNOT5	0000_H	16	$FFC1\ 0148_H$	3	16	√	√	√	√	√	√	√	√	√
PORT	Port pin read register	PPR5	0000_H	16	$FFC1\ 014C_H$	3	16	√	√	√	√	√	√	√	√	√
PORT	Port mode register	PM5	$FFFF_H$	16	$FFC1\ 0150_H$	3	16	√	√	√	√	√	√	√	√	√
PORT	Port mode control register	PMC5	0000_H	16	$FFC1\ 0154_H$	3	16	√	√	√	√	√	√	√	√	√
PORT	Port function control register	PFC5	0000_H	16	$FFC1\ 0158_H$	3	16	√	√	√	√	√	√	√	√	√
PORT	Port function control expansion register	PFCE5	0000_H	16	$FFC1\ 015C_H$	3	16	√	√	√	√	√	√	√	√	√
PORT	Port mode set/reset register	PMSR5	$0000\ FFFF_H$	32	$FFC1\ 0160_H$	3	32	√	√	√	√	√	√	√	√	√
PORT	Port mode control set/reset register	PMCSR5	$0000\ 0000_H$	32	$FFC1\ 0164_H$	3	32	√	√	√	√	√	√	√	√	√
PORT	Port function control addition expansion register	PFCAE5	0000_H	16	$FFC1\ 0168_H$	3	16	√	√	√	√	√	√	√	√	√
PORT	Port output level inversion register	PINV5	$0000\ 0000_H$	32	$FFC1\ 0170_H$	3	32	√	√	√	√	√	√	√	√	√
PORT	Port control register	PCR0_0	$0000\ 0010_H$	32	$FFC1\ 2000_H$	3	32	√	√	√	√	√	√	√	√	√
PORT	Port control register	PCR0_1	$0000\ 0010_H$	32	$FFC1\ 2004_H$	3	32	√	√	√	√	√	√	√	√	√
PORT	Port control register	PCR0_2	$0000\ 0010_H$	32	$FFC1\ 2008_H$	3	32	√	√	√	√	√	√	√	√	√
PORT	Port control register	PCR0_3	$0000\ 0010_H$	32	$FFC1\ 200C_H$	3	32	√	√	√	√	√	√	√	√	√
PORT	Port control register	PCR0_4	$0000\ 0010_H$	32	$FFC1\ 2010_H$	3	32	√	√	√	√	√	√	√	√	√
PORT	Port control register	PCR0_5	$0000\ 0010_H$	32	$FFC1\ 2014_H$	3	32	√	√	√	√	√	√	√	√	√
PORT	Port control register	PCR0_6	$0000\ 0010_H$	32	$FFC1\ 2018_H$	3	32	√	√	√	√	√	√	√	√	√
PORT	Port control register	PCR0_7	$0000\ 0010_H$	32	$FFC1\ 201C_H$	3	32	√	√	√	√	√	√	√	√	√
PORT	Port control register	PCR0_8	$0000\ 0010_H$	32	$FFC1\ 2020_H$	3	32	√	√	√	√	√	√	√	√	√
PORT	Port control register	PCR0_9	$0000\ 0010_H$	32	$FFC1\ 2024_H$	3	32	√	√	√	√	√	√	√	√	√
PORT	Port control register	PCR0_10	$1140\ 0000_H$	32	$FFC1\ 2028_H$	3	32	√	√	√	√	√	√	√	√	√
PORT	Port control register	PCR0_11	$0000\ 0010_H$	32	$FFC1\ 202C_H$	3	32	√	√	√	√	√	√	√	√	√
PORT	Port control register	PCR0_12	$0000\ 0010_H$	32	$FFC1\ 2030_H$	3	32	√	√	√	√	√	√	√	√	√
PORT	Port control register	PCR0_13	$0000\ 0010_H$	32	$FFC1\ 2034_H$	3	32	√	√	√	√	√	√	√	√	√
PORT	Port control register	PCR0_14	$0000\ 0010_H$	32	$FFC1\ 2038_H$	3	32	√	√	√	√	√	√	√	√	√
PORT	Port control register	PCR1_0	$0000\ 0010_H$	32	$FFC1\ 2040_H$	3	32	√	√	√	√	√	√	√	√	√
PORT	Port control register	PCR1_1	$0000\ 0010_H$	32	$FFC1\ 2044_H$	3	32	√	√	√	√	√	√	√	√	√
PORT	Port control register	PCR1_2	$0000\ 0010_H$	32	$FFC1\ 2048_H$	3	32	√	√	√	√	√	√	√	√	√
PORT	Port control register	PCR1_3	$0000\ 0010_H$	32	$FFC1\ 204C_H$	3	32	√	√	√	√	√	√	√	√	√
PORT	Port control register	PCR1_4	$0000\ 0010_H$	32	$FFC1\ 2050_H$	3	32	√	√	√	√	√	√	√	√	√
PORT	Port control register	PCR2_0	$0000\ 0010_H$	32	$FFC1\ 2080_H$	3	32	√	√	√	√	√	√	√	√	√

Table A.1 List of Registers (11/124)

Module	Register	Symbol	Value after Reset	Number of Bits	Address	Peripheral IP group	Access Size	Reset Source*1							Access Authority*1	
								POCRES	CVMRES	EXTRES	DBRES	ECMRES	BISTRES	SWRES	SV	UM
PORT	Port control register	PCR2_1	$0000\ 0010_H$	32	$FFC1\ 2084_H$	3	32	√	√	√	√	√	√	√	√	√
PORT	Port control register	PCR2_2	$0000\ 0010_H$	32	$FFC1\ 2088_H$	3	32	√	√	√	√	√	√	√	√	√
PORT	Port control register	PCR2_3	$0000\ 0010_H$	32	$FFC1\ 208C_H$	3	32	√	√	√	√	√	√	√	√	√
PORT	Port control register	PCR2_4	$0000\ 0010_H$	32	$FFC1\ 2090_H$	3	32	√	√	√	√	√	√	√	√	√
PORT	Port control register	PCR2_5	$0000\ 0010_H$	32	$FFC1\ 2094_H$	3	32	√	√	√	√	√	√	√	√	√
PORT	Port control register	PCR2_6	$0000\ 0010_H$	32	$FFC1\ 2098_H$	3	32	√	√	√	√	√	√	√	√	√
PORT	Port control register	PCR2_7	$0000\ 0010_H$	32	$FFC1\ 209C_H$	3	32	√	√	√	√	√	√	√	√	√
PORT	Port control register	PCR2_8	$0000\ 0010_H$	32	$FFC1\ 20A0_H$	3	32	√	√	√	√	√	√	√	√	√
PORT	Port control register	PCR2_9	$0000\ 0010_H$	32	$FFC1\ 20A4_H$	3	32	√	√	√	√	√	√	√	√	√
PORT	Port control register	PCR2_10	$0000\ 0010_H$	32	$FFC1\ 20A8_H$	3	32	√	√	√	√	√	√	√	√	√
PORT	Port control register	PCR2_11	$0000\ 0010_H$	32	$FFC1\ 20AC_H$	3	32	√	√	√	√	√	√	√	√	√
PORT	Port control register	PCR2_12	$0000\ 0010_H$	32	$FFC1\ 20B0_H$	3	32	√	√	√	√	√	√	√	√	√
PORT	Port control register	PCR2_13	$0000\ 0010_H$	32	$FFC1\ 20B4_H$	3	32	√	√	√	√	√	√	√	√	√
PORT	Port control register	PCR2_14	$0000\ 0010_H$	32	$FFC1\ 20B8_H$	3	32	√	√	√	√	√	√	√	√	√
PORT	Port control register	PCR2_15	$0000\ 0010_H$	32	$FFC1\ 20BC_H$	3	32	√	√	√	√	√	√	√	√	√
PORT	Port control register	PCR3_0	$0000\ 0010_H$	32	$FFC1\ 20C0_H$	3	32	√	√	√	√	√	√	√	√	√
PORT	Port control register	PCR3_1	$0000\ 0010_H$	32	$FFC1\ 20C4_H$	3	32	√	√	√	√	√	√	√	√	√
PORT	Port control register	PCR3_2	$0000\ 0010_H$	32	$FFC1\ 20C8_H$	3	32	√	√	√	√	√	√	√	√	√
PORT	Port control register	PCR3_3	$0000\ 0010_H$	32	$FFC1\ 20CC_H$	3	32	√	√	√	√	√	√	√	√	√
PORT	Port control register	PCR3_4	$0000\ 0010_H$	32	$FFC1\ 20D0_H$	3	32	√	√	√	√	√	√	√	√	√
PORT	Port control register	PCR3_5	$0000\ 0010_H$	32	$FFC1\ 20D4_H$	3	32	√	√	√	√	√	√	√	√	√
PORT	Port control register	PCR3_6	$0000\ 0010_H$	32	$FFC1\ 20D8_H$	3	32	√	√	√	√	√	√	√	√	√
PORT	Port control register	PCR3_7	$0000\ 0010_H$	32	$FFC1\ 20DC_H$	3	32	√	√	√	√	√	√	√	√	√
PORT	Port control register	PCR3_8	$0000\ 0010_H$	32	$FFC1\ 20E0_H$	3	32	√	√	√	√	√	√	√	√	√
PORT	Port control register	PCR3_9	$0000\ 0010_H$	32	$FFC1\ 20E4_H$	3	32	√	√	√	√	√	√	√	√	√
PORT	Port control register	PCR3_10	$0000\ 0010_H$	32	$FFC1\ 20E8_H$	3	32	√	√	√	√	√	√	√	√	√
PORT	Port control register	PCR3_11	$0000\ 0010_H$	32	$FFC1\ 20EC_H$	3	32	√	√	√	√	√	√	√	√	√
PORT	Port control register	PCR3_12	$0000\ 0010_H$	32	$FFC1\ 20F0_H$	3	32	√	√	√	√	√	√	√	√	√
PORT	Port control register	PCR3_13	$0000\ 0010_H$	32	$FFC1\ 20F4_H$	3	32	√	√	√	√	√	√	√	√	√
PORT	Port control register	PCR3_14	$0000\ 0010_H$	32	$FFC1\ 20F8_H$	3	32	√	√	√	√	√	√	√	√	√
PORT	Port control register	PCR4_0	$0000\ 0010_H$	32	$FFC1\ 2100_H$	3	32	√	√	√	√	√	√	√	√	√
PORT	Port control register	PCR4_1	$0000\ 0010_H$	32	$FFC1\ 2104_H$	3	32	√	√	√	√	√	√	√	√	√
PORT	Port control register	PCR4_2	$0000\ 0010_H$	32	$FFC1\ 2108_H$	3	32	√	√	√	√	√	√	√	√	√
PORT	Port control register	PCR4_3	$0000\ 0010_H$	32	$FFC1\ 210C_H$	3	32	√	√	√	√	√	√	√	√	√
PORT	Port control register	PCR4_4	$0000\ 0010_H$	32	$FFC1\ 2110_H$	3	32	√	√	√	√	√	√	√	√	√
PORT	Port control register	PCR4_5	$0000\ 0010_H$	32	$FFC1\ 2114_H$	3	32	√	√	√	√	√	√	√	√	√
PORT	Port control register	PCR4_6	$0000\ 0010_H$	32	$FFC1\ 2118_H$	3	32	√	√	√	√	√	√	√	√	√
PORT	Port control register	PCR4_7	$0000\ 0010_H$	32	$FFC1\ 211C_H$	3	32	√	√	√	√	√	√	√	√	√
PORT	Port control register	PCR4_8	$0000\ 0010_H$	32	$FFC1\ 2120_H$	3	32	√	√	√	√	√	√	√	√	√
PORT	Port control register	PCR4_9	$0000\ 0010_H$	32	$FFC1\ 2124_H$	3	32	√	√	√	√	√	√	√	√	√
PORT	Port control register	PCR4_10	$0000\ 0010_H$	32	$FFC1\ 2128_H$	3	32	√	√	√	√	√	√	√	√	√
PORT	Port control register	PCR4_11	$0000\ 0010_H$	32	$FFC1\ 212C_H$	3	32	√	√	√	√	√	√	√	√	√
PORT	Port control register	PCR4_12	$0000\ 0010_H$	32	$FFC1\ 2130_H$	3	32	√	√	√	√	√	√	√	√	√
PORT	Port control register	PCR4_13	$0000\ 0010_H$	32	$FFC1\ 2134_H$	3	32	√	√	√	√	√	√	√	√	√
PORT	Port control register	PCR4_14	$0000\ 0010_H$	32	$FFC1\ 2138_H$	3	32	√	√	√	√	√	√	√	√	√
PORT	Port control register	PCR5_0	$0000\ 0010_H$	32	$FFC1\ 2140_H$	3	32	√	√	√	√	√	√	√	√	√
PORT	Port control register	PCR5_1	$0000\ 0010_H$	32	$FFC1\ 2144_H$	3	32	√	√	√	√	√	√	√	√	√
PORT	Port control register	PCR5_2	$0000\ 0010_H$	32	$FFC1\ 2148_H$	3	32	√	√	√	√	√	√	√	√	√
PORT	Port control register	PCR5_3	$0000\ 0010_H$	32	$FFC1\ 214C_H$	3	32	√	√	√	√	√	√	√	√	√
PORT	Port control register	PCR5_4	$0000\ 0010_H$	32	$FFC1\ 2150_H$	3	32	√	√	√	√	√	√	√	√	√
PORT	Port control register	PCR5_5	$0000\ 0010_H$	32	$FFC1\ 2154_H$	3	32	√	√	√	√	√	√	√	√	√
PORT	Port control register	PCR5_6	$0000\ 0010_H$	32	$FFC1\ 2158_H$	3	32	√	√	√	√	√	√	√	√	√
PORT	Port control register	PCR5_7	$0000\ 0010_H$	32	$FFC1\ 215C_H$	3	32	√	√	√	√	√	√	√	√	√

Table A.1 List of Registers (12/124)

Module	Register	Symbol	Value after Reset	Number of Bits	Address	Peripheral IP group	Access Size	Reset Source*1							Access Authority*1	
								POCRES	CVMRES	EXTRES	DBRES	ECMRES	BISTRES	SWRES	SV	UM
PORT	Port control register	PCR5_8	$0000\ 0010_H$	32	$FFC1\ 2160_H$	3	32	√	√	√	√	√	√	√	√	√
PORT	Port control register	PCR5_9	$0000\ 0010_H$	32	$FFC1\ 2164_H$	3	32	√	√	√	√	√	√	√	√	√
PORT	Port control register	PCR5_10	$0000\ 0010_H$	32	$FFC1\ 2168_H$	3	32	√	√	√	√	√	√	√	√	√
PORT	Port control register	PCR5_11	$0000\ 0010_H$	32	$FFC1\ 216C_H$	3	32	√	√	√	√	√	√	√	√	√
PORT	Port control register	PCR5_12	$0000\ 0010_H$	32	$FFC1\ 2170_H$	3	32	√	√	√	√	√	√	√	√	√
PORT	Port control register	PCR5_13	$0000\ 0010_H$	32	$FFC1\ 2174_H$	3	32	√	√	√	√	√	√	√	√	√
PORT	Port control register	PCR5_14	$0000\ 0010_H$	32	$FFC1\ 2178_H$	3	32	√	√	√	√	√	√	√	√	√
PORT	Port control register	PCR5_15	$0000\ 0010_H$	32	$FFC1\ 217C_H$	3	32	√	√	√	√	√	√	√	√	√
PORT	Port input buffer control register	PIBC0	0000_H	16	$FFC1\ 4000_H$	3	16	√	√	√	√	√	√	√	√	√
PORT	Port bi-direction control register	PBDC0	0000_H	16	$FFC1\ 4004_H$	3	16	√	√	√	√	√	√	√	√	√
PORT	Port IP control register	PIPC0	0000_H	16	$FFC1\ 4008_H$	3	16	√	√	√	√	√	√	√	√	√
PORT	Pull-up option register	PU0	0000_H	16	$FFC1\ 400C_H$	3	16	√	√	√	√	√	√	√	√	√
PORT	Pull-down option register	PD0	0000_H	16	$FFC1\ 4010_H$	3	16	√	√	√	√	√	√	√	√	√
PORT	Port open-drain control register	PODC0	$0000\ 0400_H$	32	$FFC1\ 4014_H$	3	32	√	√	√	√	√	√	√	√	√
PORT	Port drive strength control register	PDSC0	$0000\ 0400_H$	32	$FFC1\ 4018_H$	3	32	√	√	√	√	√	√	√	√	√
PORT	Port universal control register	PUCC0	$0000\ 0000_H$	32	$FFC1\ 4028_H$	3	32	√	√	√	√	√	√	√	√	√
PORT	Port input buffer selection register	PISA0	0400_H	16	$FFC1\ 402C_H$	3	16	√	√	√	√	√	√	√	√	√
PORT	Write-Protection Command Register	PPCMD0	$0000\ 0000_H$	32	$FFC1\ 4030_H$	3	32	√	√	√	√	√	√	√	√	√
PORT	Write Sequence Status Register	PPROTS0	$0000\ 0000_H$	32	$FFC1\ 4034_H$	3	32	√	√	√	√	√	√	√	√	√
PORT	Port open-drain control expansion register	PODCE0	$0000\ 0000_H$	32	$FFC1\ 403C_H$	3	32	√	√	√	√	√	√	√	√	√
PORT	Port input buffer control register	PIBC1	0000_H	16	$FFC1\ 4040_H$	3	16	√	√	√	√	√	√	√	√	√
PORT	Port bi-direction control register	PBDC1	0000_H	16	$FFC1\ 4044_H$	3	16	√	√	√	√	√	√	√	√	√
PORT	Port IP control register	PIPC1	0000_H	16	$FFC1\ 4048_H$	3	16	√	√	√	√	√	√	√	√	√
PORT	Pull-up option register	PU1	0000_H	16	$FFC1\ 404C_H$	3	16	√	√	√	√	√	√	√	√	√
PORT	Pull-down option register	PD1	0000_H	16	$FFC1\ 4050_H$	3	16	√	√	√	√	√	√	√	√	√
PORT	Port open-drain control register	PODC1	$0000\ 0000_H$	32	$FFC1\ 4054_H$	3	32	√	√	√	√	√	√	√	√	√
PORT	Port drive strength control register	PDSC1	$0000\ 0000_H$	32	$FFC1\ 4058_H$	3	32	√	√	√	√	√	√	√	√	√
PORT	Port universal control register	PUCC1	$0000\ 0000_H$	32	$FFC1\ 4068_H$	3	32	√	√	√	√	√	√	√	√	√
PORT	Port input buffer selection register	PISA1	0000_H	16	$FFC1\ 406C_H$	3	16	√	√	√	√	√	√	√	√	√
PORT	Write-Protection Command Register	PPCMD1	$0000\ 0000_H$	32	$FFC1\ 4070_H$	3	32	√	√	√	√	√	√	√	√	√
PORT	Write Sequence Status Register	PPROTS1	$0000\ 0000_H$	32	$FFC1\ 4074_H$	3	32	√	√	√	√	√	√	√	√	√
PORT	Port open-drain control expansion register	PODCE1	$0000\ 0000_H$	32	$FFC1\ 407C_H$	3	32	√	√	√	√	√	√	√	√	√
PORT	Port input buffer control register	PIBC2	0000_H	16	$FFC1\ 4080_H$	3	16	√	√	√	√	√	√	√	√	√
PORT	Port bi-direction control register	PBDC2	0000_H	16	$FFC1\ 4084_H$	3	16	√	√	√	√	√	√	√	√	√
PORT	Port IP control register	PIPC2	0000_H	16	$FFC1\ 4088_H$	3	16	√	√	√	√	√	√	√	√	√
PORT	Pull-up option register	PU2	0000_H	16	$FFC1\ 408C_H$	3	16	√	√	√	√	√	√	√	√	√
PORT	Pull-down option register	PD2	0000_H	16	$FFC1\ 4090_H$	3	16	√	√	√	√	√	√	√	√	√
PORT	Port open-drain control register	PODC2	$0000\ 0000_H$	32	$FFC1\ 4094_H$	3	32	√	√	√	√	√	√	√	√	√
PORT	Port drive strength control register	PDSC2	$0000\ 0000_H$	32	$FFC1\ 4098_H$	3	32	√	√	√	√	√	√	√	√	√
PORT	Port universal control register	PUCC2	$0000\ 0000_H$	32	$FFC1\ 40A8_H$	3	32	√	√	√	√	√	√	√	√	√
PORT	Port input buffer selection register	PISA2	0000_H	16	$FFC1\ 40AC_H$	3	16	√	√	√	√	√	√	√	√	√
PORT	Write-Protection Command Register	PPCMD2	$0000\ 0000_H$	32	$FFC1\ 40B0_H$	3	32	√	√	√	√	√	√	√	√	√
PORT	Write Sequence Status Register	PPROTS2	$0000\ 0000_H$	32	$FFC1\ 40B4_H$	3	32	√	√	√	√	√	√	√	√	√
PORT	Port open-drain control expansion register	PODCE2	$0000\ 0000_H$	32	$FFC1\ 40BC_H$	3	32	√	√	√	√	√	√	√	√	√
PORT	Port input buffer control register	PIBC3	0000_H	16	$FFC1\ 40C0_H$	3	16	√	√	√	√	√	√	√	√	√
PORT	Port bi-direction control register	PBDC3	0000_H	16	$FFC1\ 40C4_H$	3	16	√	√	√	√	√	√	√	√	√
PORT	Port IP control register	PIPC3	0000_H	16	$FFC1\ 40C8_H$	3	16	√	√	√	√	√	√	√	√	√
PORT	Pull-up option register	PU3	0000_H	16	$FFC1\ 40CC_H$	3	16	√	√	√	√	√	√	√	√	√
PORT	Pull-down option register	PD3	0000_H	16	$FFC1\ 40D0_H$	3	16	√	√	√	√	√	√	√	√	√
PORT	Port open-drain control register	PODC3	$0000\ 0000_H$	32	$FFC1\ 40D4_H$	3	32	√	√	√	√	√	√	√	√	√
PORT	Port drive strength control register	PDSC3	$0000\ 0000_H$	32	$FFC1\ 40D8_H$	3	32	√	√	√	√	√	√	√	√	√
PORT	Port universal control register	PUCC3	$0000\ 0000_H$	32	$FFC1\ 40E8_H$	3	32	√	√	√	√	√	√	√	√	√
PORT	Port input buffer selection register	PISA3	0000_H	16	$FFC1\ 40EC_H$	3	16	√	√	√	√	√	√	√	√	√

Table A.1 List of Registers (13/124)

Module	Register	Symbol	Value after Reset	Number of Bits	Address	Peripheral IP group	Access Size	Reset Source*1							Access Authority*1	
								POCRES	CVMRES	EXTRES	DBRES	ECMRES	BISTRES	SWRES	SV	UM
PORT	Write-Protection Command Register	PPCMD3	$0000\ 0000_H$	32	$FFC1\ 40F0_H$	3	32	√	√	√	√	√	√	√	√	√
PORT	Write Sequence Status Register	PPROTS3	$0000\ 0000_H$	32	$FFC1\ 40F4_H$	3	32	√	√	√	√	√	√	√	√	√
PORT	Port open-drain control expansion register	PODCE3	$0000\ 0000_H$	32	$FFC1\ 40FC_H$	3	32	√	√	√	√	√	√	√	√	√
PORT	Port input buffer control register	PIBC4	0000_H	16	$FFC1\ 4100_H$	3	16	√	√	√	√	√	√	√	√	√
PORT	Port bi-direction control register	PBDC4	0000_H	16	$FFC1\ 4104_H$	3	16	√	√	√	√	√	√	√	√	√
PORT	Port IP control register	PIPC4	0000_H	16	$FFC1\ 4108_H$	3	16	√	√	√	√	√	√	√	√	√
PORT	Pull-up option register	PU4	0000_H	16	$FFC1\ 410C_H$	3	16	√	√	√	√	√	√	√	√	√
PORT	Pull-down option register	PD4	0000_H	16	$FFC1\ 4110_H$	3	16	√	√	√	√	√	√	√	√	√
PORT	Port open-drain control register	PODC4	$0000\ 0000_H$	32	$FFC1\ 4114_H$	3	32	√	√	√	√	√	√	√	√	√
PORT	Port drive strength control register	PDSC4	$0000\ 0000_H$	32	$FFC1\ 4118_H$	3	32	√	√	√	√	√	√	√	√	√
PORT	Port universal control register	PUCC4	$0000\ 0000_H$	32	$FFC1\ 4128_H$	3	32	√	√	√	√	√	√	√	√	√
PORT	Port input buffer selection register	PISA4	0000_H	16	$FFC1\ 412C_H$	3	16	√	√	√	√	√	√	√	√	√
PORT	Write-Protection Command Register	PPCMD4	$0000\ 0000_H$	32	$FFC1\ 4130_H$	3	32	√	√	√	√	√	√	√	√	√
PORT	Write Sequence Status Register	PPROTS4	$0000\ 0000_H$	32	$FFC1\ 4134_H$	3	32	√	√	√	√	√	√	√	√	√
PORT	Port open-drain control expansion register	PODCE4	$0000\ 0000_H$	32	$FFC1\ 413C_H$	3	32	√	√	√	√	√	√	√	√	√
PORT	Port input buffer control register	PIBC5	0000_H	16	$FFC1\ 4140_H$	3	16	√	√	√	√	√	√	√	√	√
PORT	Port bi-direction control register	PBDC5	0000_H	16	$FFC1\ 4144_H$	3	16	√	√	√	√	√	√	√	√	√
PORT	Port IP control register	PIPC5	0000_H	16	$FFC1\ 4148_H$	3	16	√	√	√	√	√	√	√	√	√
PORT	Pull-up option register	PU5	0000_H	16	$FFC1\ 414C_H$	3	16	√	√	√	√	√	√	√	√	√
PORT	Pull-down option register	PD5	0000_H	16	$FFC1\ 4150_H$	3	16	√	√	√	√	√	√	√	√	√
PORT	Port open-drain control register	PODC5	$0000\ 0000_H$	32	$FFC1\ 4154_H$	3	32	√	√	√	√	√	√	√	√	√
PORT	Port drive strength control register	PDSC5	$0000\ 0000_H$	32	$FFC1\ 4158_H$	3	32	√	√	√	√	√	√	√	√	√
PORT	Port universal control register	PUCC5	$0000\ 0000_H$	32	$FFC1\ 4168_H$	3	32	√	√	√	√	√	√	√	√	√
PORT	Write-Protection Command Register	PPCMD5	$0000\ 0000_H$	32	$FFC1\ 4170_H$	3	32	√	√	√	√	√	√	√	√	√
PORT	Write Sequence Status Register	PPROTS5	$0000\ 0000_H$	32	$FFC1\ 4174_H$	3	32	√	√	√	√	√	√	√	√	√
PORT	Port open-drain control expansion register	PODCE5	$0000\ 0000_H$	32	$FFC1\ 417C_H$	3	32	√	√	√	√	√	√	√	√	√
PORTJ	Port register	JP0	00_H	8	$FFC2\ 0000_H$	3	8	√	√	√	√	√	√	√	√	√
PORTJ	Port set/reset register	JPSR0	$0000\ 0000_H$	32	$FFC2\ 0004_H$	3	32	√	√	√	√	√	√	√	√	√
PORTJ	Port NOT register	JPNOT0	00_H	8	$FFC2\ 0008_H$	3	8	√	√	√	√	√	√	√	√	√
PORTJ	Port pin read register	JPPR0	00_H	8	$FFC2\ 000C_H$	3	8	√	√	√	√	√	√	√	√	√
PORTJ	Port mode register	JPM0	FF_H	8	$FFC2\ 0010_H$	3	8	√	√	√	√	√	√	√	√	√
PORTJ	Port mode control register	JPMC0	00_H	8	$FFC2\ 0014_H$	3	8	√	√	√	√	√	√	√	√	√
PORTJ	Port function control expansion register	JPFCE0	00_H	8	$FFC2\ 001C_H$	3	8	√	√	√	√	√	√	√	√	√
PORTJ	Port mode set/reset register	JPMSR0	$0000\ 00FF_H$	32	$FFC2\ 0020_H$	3	32	√	√	√	√	√	√	√	√	√
PORTJ	Port mode control set/reset register	JPMCSR0	$0000\ 0000_H$	32	$FFC2\ 0024_H$	3	32	√	√	√	√	√	√	√	√	√
PORTJ	Port control register	JPCR0_0	$0000\ 0010_H$	32	$FFC2\ 2000_H$	3	32	√	√	√	√	√	√	√	√	√
PORTJ	Port control register	JPCR0_1	$0000\ 0010_H$	32	$FFC2\ 2004_H$	3	32	√	√	√	√	√	√	√	√	√
PORTJ	Port control register	JPCR0_2	$0000\ 0010_H$	32	$FFC2\ 2008_H$	3	32	√	√	√	√	√	√	√	√	√
PORTJ	Port control register	JPCR0_3	$0000\ 0010_H$	32	$FFC2\ 200C_H$	3	32	√	√	√	√	√	√	√	√	√
PORTJ	Port control register	JPCR0_4	$0000\ 0010_H$	32	$FFC2\ 2010_H$	3	32	√	√	√	√	√	√	√	√	√
PORTJ	Port control register	JPCR0_5	$0000\ 0010_H$	32	$FFC2\ 2014_H$	3	32	√	√	√	√	√	√	√	√	√
PORTJ	Port input buffer control register	JPIBC0	00_H	8	$FFC2\ 4000_H$	3	8	√	√	√	√	√	√	√	√	√
PORTJ	Port bi-direction control register	JPBDC0	00_H	8	$FFC2\ 4004_H$	3	8	√	√	√	√	√	√	√	√	√
PORTJ	Pull-up option register	JPU0	00_H	8	$FFC2\ 400C_H$	3	8	√	√	√	√	√	√	√	√	√
PORTJ	Pull-down option register	JPD0	00_H	8	$FFC2\ 4010_H$	3	8	√	√	√	√	√	√	√	√	√
PORTJ	Port open-drain control register	JPODC0	$0000\ 0000_H$	32	$FFC2\ 4014_H$	3	32	√	√	√	√	√	√	√	√	√
PORTJ	Port drive strength control register	JPDSC0	$0000\ 0000_H$	32	$FFC2\ 4018_H$	3	32	√	√	√	√	√	√	√	√	√
PORTJ	Port universal control register	JPUCC0	$0000\ 0000_H$	32	$FFC2\ 4028_H$	3	32	√	√	√	√	√	√	√	√	√
PORTJ	Port input buffer selection register	JPISA0	00_H	8	$FFC2\ 402C_H$	3	8	√	√	√	√	√	√	√	√	√
PORTJ	Write-Protection Command Register	JPPCMD0	$0000\ 0000_H$	32	$FFC2\ 4030_H$	3	32	√	√	√	√	√	√	√	√	√
PORTJ	Write Sequence Status Register	JPPROTS0	$0000\ 0000_H$	32	$FFC2\ 4034_H$	3	32	√	√	√	√	√	√	√	√	√
DNFA0	Digital noise elimination control register	DNFA0CTL	00_H	8	$FFC3\ 0000_H$	3	8	√	√	√	√	√	√	√	√	√
DNFA0	Digital noise elimination enable register	DNFA0EN	0000_H	16	$FFC3\ 0004_H$	3	16	√	√	√	√	√	√	√	√	√

Table A.1 List of Registers (14/124)

Module	Register	Symbol	Value after Reset	Number of Bits	Address	Peripheral IP group	Access Size	Reset Source*1							Access Authority*1	
								POCRES	CVMRES	EXTRES	DBRES	ECMRES	BISTRES	SWRES	SV	UM
DNFA0	Digital noise elimination enable register	DNFA0ENL	00_H	8	$FFC3\ 000C_H$	3	1, 8	√	√	√	√	√	√	√	√	√
DNFA1	Digital noise elimination control register	DNFA1CTL	00_H	8	$FFC3\ 0100_H$	3	8	√	√	√	√	√	√	√	√	√
DNFA1	Digital noise elimination enable register	DNFA1EN	0000_H	16	$FFC3\ 0104_H$	3	16	√	√	√	√	√	√	√	√	√
DNFA1	Digital noise elimination enable register	DNFA1ENL	00_H	8	$FFC3\ 010C_H$	3	1, 8	√	√	√	√	√	√	√	√	√
DNFA2	Digital noise elimination control register	DNFA2CTL	00_H	8	$FFC3\ 0200_H$	3	8	√	√	√	√	√	√	√	√	√
DNFA2	Digital noise elimination enable register	DNFA2EN	0000_H	16	$FFC3\ 0204_H$	3	16	√	√	√	√	√	√	√	√	√
DNFA2	Digital noise elimination enable register	DNFA2ENL	00_H	8	$FFC3\ 020C_H$	3	1, 8	√	√	√	√	√	√	√	√	√
DNFA3	Digital noise elimination control register	DNFA3CTL	00_H	8	$FFC3\ 0300_H$	3	8	√	√	√	√	√	√	√	√	√
DNFA3	Digital noise elimination enable register	DNFA3EN	0000_H	16	$FFC3\ 0304_H$	3	16	√	√	√	√	√	√	√	√	√
DNFA3	Digital noise elimination enable register	DNFA3ENL	00_H	8	$FFC3\ 030C_H$	3	1, 8	√	√	√	√	√	√	√	√	√
DNFA4	Digital noise elimination control register	DNFA4CTL	00_H	8	$FFC3\ 0400_H$	3	8	√	√	√	√	√	√	√	√	√
DNFA4	Digital noise elimination enable register	DNFA4EN	0000_H	16	$FFC3\ 0404_H$	3	16	√	√	√	√	√	√	√	√	√
DNFA4	Digital noise elimination enable register	DNFA4ENL	00_H	8	$FFC3\ 040C_H$	3	1, 8	√	√	√	√	√	√	√	√	√
DNFA5	Digital noise elimination control register	DNFA5CTL	00_H	8	$FFC3\ 0500_H$	3	8	√	√	√	√	√	√	√	√	√
DNFA5	Digital noise elimination enable register	DNFA5EN	0000_H	16	$FFC3\ 0504_H$	3	16	√	√	√	√	√	√	√	√	√
DNFA5	Digital noise elimination enable register	DNFA5ENL	00_H	8	$FFC3\ 050C_H$	3	1, 8	√	√	√	√	√	√	√	√	√
DNFA6	Digital noise elimination control register	DNFA6CTL	00_H	8	$FFC3\ 0600_H$	3	8	√	√	√	√	√	√	√	√	√
DNFA6	Digital noise elimination enable register	DNFA6EN	0000_H	16	$FFC3\ 0604_H$	3	16	√	√	√	√	√	√	√	√	√
DNFA6	Digital noise elimination enable register	DNFA6ENL	00_H	8	$FFC3\ 060C_H$	3	1, 8	√	√	√	√	√	√	√	√	√
DNFA7	Digital noise elimination control register	DNFA7CTL	00_H	8	$FFC3\ 0700_H$	3	8	√	√	√	√	√	√	√	√	√
DNFA7	Digital noise elimination enable register	DNFA7EN	0000_H	16	$FFC3\ 0704_H$	3	16	√	√	√	√	√	√	√	√	√
DNFA7	Digital noise elimination enable register	DNFA7ENL	00_H	8	$FFC3\ 070C_H$	3	1, 8	√	√	√	√	√	√	√	√	√
DNFA8	Digital noise elimination control register	DNFA8CTL	00_H	8	$FFC3\ 0800_H$	3	8	√	√	√	√	√	√	√	√	√
DNFA8	Digital noise elimination enable register	DNFA8EN	0000_H	16	$FFC3\ 0804_H$	3	16	√	√	√	√	√	√	√	√	√
DNFA8	Digital noise elimination enable register	DNFA8ENL	00_H	8	$FFC3\ 080C_H$	3	1, 8	√	√	√	√	√	√	√	√	√
DNFA9	Digital noise elimination control register	DNFA9CTL	00_H	8	$FFC3\ 0900_H$	3	8	√	√	√	√	√	√	√	√	√
DNFA9	Digital noise elimination enable register	DNFA9EN	0000_H	16	$FFC3\ 0904_H$	3	16	√	√	√	√	√	√	√	√	√
DNFA9	Digital noise elimination enable register	DNFA9ENL	00_H	8	$FFC3\ 090C_H$	3	1, 8	√	√	√	√	√	√	√	√	√
DNFA10	Digital noise elimination control register	DNFA10CTL	00_H	8	$FFC3\ 0A00_H$	3	8	√	√	√	√	√	√	√	√	√
DNFA10	Digital noise elimination enable register	DNFA10EN	0000_H	16	$FFC3\ 0A04_H$	3	16	√	√	√	√	√	√	√	√	√
DNFA10	Digital noise elimination enable register	DNFA10ENL	00_H	8	$FFC3\ 0A0C_H$	3	1, 8	√	√	√	√	√	√	√	√	√
DNFA11	Digital noise elimination control register	DNFA11CTL	00_H	8	$FFC3\ 0B00_H$	3	8	√	√	√	√	√	√	√	√	√
DNFA11	Digital noise elimination enable register	DNFA11EN	0000_H	16	$FFC3\ 0B04_H$	3	16	√	√	√	√	√	√	√	√	√
DNFA11	Digital noise elimination enable register	DNFA11ENL	00_H	8	$FFC3\ 0B0C_H$	3	1, 8	√	√	√	√	√	√	√	√	√
DNFA12	Digital noise elimination control register	DNFA12CTL	00_H	8	$FFC3\ 0C00_H$	3	8	√	√	√	√	√	√	√	√	√
DNFA12	Digital noise elimination enable register	DNFA12EN	0000_H	16	$FFC3\ 0C04_H$	3	16	√	√	√	√	√	√	√	√	√
DNFA12	Digital noise elimination enable register	DNFA12ENL	00_H	8	$FFC3\ 0C0C_H$	3	1, 8	√	√	√	√	√	√	√	√	√
DNFA13	Digital noise elimination control register	DNFA13CTL	00_H	8	$FFC3\ 0D00_H$	3	8	√	√	√	√	√	√	√	√	√
DNFA13	Digital noise elimination enable register	DNFA13EN	0000_H	16	$FFC3\ 0D04_H$	3	16	√	√	√	√	√	√	√	√	√
DNFA13	Digital noise elimination enable register	DNFA13ENL	00_H	8	$FFC3\ 0D0C_H$	3	1, 8	√	√	√	√	√	√	√	√	√
DNFA14	Digital noise elimination control register	DNFA14CTL	00_H	8	$FFC3\ 0E00_H$	3	8	√	√	√	√	√	√	√	√	√
DNFA14	Digital noise elimination enable register	DNFA14EN	0000_H	16	$FFC3\ 0E04_H$	3	16	√	√	√	√	√	√	√	√	√
DNFA14	Digital noise elimination enable register	DNFA14ENL	00_H	8	$FFC3\ 0E0C_H$	3	1, 8	√	√	√	√	√	√	√	√	√
DNFA15	Digital noise elimination control register	DNFA15CTL	00_H	8	$FFC3\ 0F00_H$	3	8	√	√	√	√	√	√	√	√	√
DNFA15	Digital noise elimination enable register	DNFA15EN	0000_H	16	$FFC3\ 0F04_H$	3	16	√	√	√	√	√	√	√	√	√
DNFA15	Digital noise elimination enable register	DNFA15ENL	00_H	8	$FFC3\ 0F0C_H$	3	1, 8	√	√	√	√	√	√	√	√	√
DNFA16	Digital noise elimination control register	DNFA16CTL	00_H	8	$FFC3\ 1000_H$	3	8	√	√	√	√	√	√	√	√	√
DNFA16	Digital noise elimination enable register	DNFA16EN	0000_H	16	$FFC3\ 1004_H$	3	16	√	√	√	√	√	√	√	√	√
DNFA16	Digital noise elimination enable register	DNFA16ENL	00_H	8	$FFC3\ 100C_H$	3	1, 8	√	√	√	√	√	√	√	√	√
DNFA17	Digital noise elimination control register	DNFA17CTL	00_H	8	$FFC3\ 1100_H$	3	8	√	√	√	√	√	√	√	√	√
DNFA17	Digital noise elimination enable register	DNFA17EN	0000_H	16	$FFC3\ 1104_H$	3	16	√	√	√	√	√	√	√	√	√
DNFA17	Digital noise elimination enable register	DNFA17ENL	00_H	8	$FFC3\ 110C_H$	3	1, 8	√	√	√	√	√	√	√	√	√
DNFA18	Digital noise elimination control register	DNFA18CTL	00_H	8	$FFC3\ 1200_H$	3	8	√	√	√	√	√	√	√	√	√

Table A.1 List of Registers (15/124)

Module	Register	Symbol	Value after Reset	Number of Bits	Address	Peripheral IP group	Access Size	Reset Source*1							Access Authority*1	
								POCRES	CVMRES	EXTRES	DBRES	ECMRES	BISTRES	SWRES	SV	UM
DNFA18	Digital noise elimination enable register	DNFA18EN	0000_H	16	$FFC3\ 1204_H$	3	16	√	√	√	√	√	√	√	√	√
DNFA18	Digital noise elimination enable register	DNFA18ENL	00_H	8	$FFC3\ 120C_H$	3	1, 8	√	√	√	√	√	√	√	√	√
DNFA19	Digital noise elimination control register	DNFA19CTL	00_H	8	$FFC3\ 1300_H$	3	8	√	√	√	√	√	√	√	√	√
DNFA19	Digital noise elimination enable register	DNFA19EN	0000_H	16	$FFC3\ 1304_H$	3	16	√	√	√	√	√	√	√	√	√
DNFA19	Digital noise elimination enable register	DNFA19ENL	00_H	8	$FFC3\ 130C_H$	3	1, 8	√	√	√	√	√	√	√	√	√
DNFA20	Digital noise elimination control register	DNFA20CTL	00_H	8	$FFC3\ 1400_H$	3	8	√	√	√	√	√	√	√	√	√
DNFA20	Digital noise elimination enable register	DNFA20EN	0000_H	16	$FFC3\ 1404_H$	3	16	√	√	√	√	√	√	√	√	√
DNFA20	Digital noise elimination enable register	DNFA20ENL	00_H	8	$FFC3\ 140C_H$	3	1, 8	√	√	√	√	√	√	√	√	√
DNFA21	Digital noise elimination control register	DNFA21CTL	00_H	8	$FFC3\ 1500_H$	3	8	√	√	√	√	√	√	√	√	√
DNFA21	Digital noise elimination enable register	DNFA21EN	0000_H	16	$FFC3\ 1504_H$	3	16	√	√	√	√	√	√	√	√	√
DNFA21	Digital noise elimination enable register	DNFA21ENL	00_H	8	$FFC3\ 150C_H$	3	1, 8	√	√	√	√	√	√	√	√	√
DNFA22	Digital noise elimination control register	DNFA22CTL	00_H	8	$FFC3\ 1600_H$	3	8	√	√	√	√	√	√	√	√	√
DNFA22	Digital noise elimination enable register	DNFA22EN	0000_H	16	$FFC3\ 1604_H$	3	16	√	√	√	√	√	√	√	√	√
DNFA22	Digital noise elimination enable register	DNFA22ENL	00_H	8	$FFC3\ 160C_H$	3	1, 8	√	√	√	√	√	√	√	√	√
DNFA23	Digital noise elimination control register	DNFA23CTL	00_H	8	$FFC3\ 1700_H$	3	8	√	√	√	√	√	√	√	√	√
DNFA23	Digital noise elimination enable register	DNFA23EN	0000_H	16	$FFC3\ 1704_H$	3	16	√	√	√	√	√	√	√	√	√
DNFA23	Digital noise elimination enable register	DNFA23ENL	00_H	8	$FFC3\ 170C_H$	3	1, 8	√	√	√	√	√	√	√	√	√
DNFA24	Digital noise elimination control register	DNFA24CTL	00_H	8	$FFC3\ 1800_H$	3	8	√	√	√	√	√	√	√	√	√
DNFA24	Digital noise elimination enable register	DNFA24EN	0000_H	16	$FFC3\ 1804_H$	3	16	√	√	√	√	√	√	√	√	√
DNFA24	Digital noise elimination enable register	DNFA24ENL	00_H	8	$FFC3\ 180C_H$	3	1, 8	√	√	√	√	√	√	√	√	√
DNFA25	Digital noise elimination control register	DNFA25CTL	00_H	8	$FFC3\ 1900_H$	3	8	√	√	√	√	√	√	√	√	√
DNFA25	Digital noise elimination enable register	DNFA25EN	0000_H	16	$FFC3\ 1904_H$	3	16	√	√	√	√	√	√	√	√	√
DNFA25	Digital noise elimination enable register	DNFA25ENL	00_H	8	$FFC3\ 190C_H$	3	1, 8	√	√	√	√	√	√	√	√	√
DNFA26	Digital noise elimination control register	DNFA26CTL	00_H	8	$FFC3\ 1A00_H$	3	8	√	√	√	√	√	√	√	√	√
DNFA26	Digital noise elimination enable register	DNFA26EN	0000_H	16	$FFC3\ 1A04_H$	3	16	√	√	√	√	√	√	√	√	√
DNFA26	Digital noise elimination enable register	DNFA26ENL	00_H	8	$FFC3\ 1A0C_H$	3	1, 8	√	√	√	√	√	√	√	√	√
DNFA27	Digital noise elimination control register	DNFA27CTL	00_H	8	$FFC3\ 1B00_H$	3	8	√	√	√	√	√	√	√	√	√
DNFA27	Digital noise elimination enable register	DNFA27EN	0000_H	16	$FFC3\ 1B04_H$	3	16	√	√	√	√	√	√	√	√	√
DNFA27	Digital noise elimination enable register	DNFA27ENL	00_H	8	$FFC3\ 1B0C_H$	3	1, 8	√	√	√	√	√	√	√	√	√
DNFA28	Digital noise elimination control register	DNFA28CTL	00_H	8	$FFC3\ 1C00_H$	3	8	√	√	√	√	√	√	√	√	√
DNFA28	Digital noise elimination enable register	DNFA28EN	0000_H	16	$FFC3\ 1C04_H$	3	16	√	√	√	√	√	√	√	√	√
DNFA28	Digital noise elimination enable register	DNFA28ENL	00_H	8	$FFC3\ 1C0C_H$	3	1, 8	√	√	√	√	√	√	√	√	√
DNFA29	Digital noise elimination control register	DNFA29CTL	00_H	8	$FFC3\ 1D00_H$	3	8	√	√	√	√	√	√	√	√	√
DNFA29	Digital noise elimination enable register	DNFA29EN	0000_H	16	$FFC3\ 1D04_H$	3	16	√	√	√	√	√	√	√	√	√
DNFA29	Digital noise elimination enable register	DNFA29ENL	00_H	8	$FFC3\ 1D0C_H$	3	1, 8	√	√	√	√	√	√	√	√	√
DNFA30	Digital noise elimination control register	DNFA30CTL	00_H	8	$FFC3\ 1E00_H$	3	8	√	√	√	√	√	√	√	√	√
DNFA30	Digital noise elimination enable register	DNFA30EN	0000_H	16	$FFC3\ 1E04_H$	3	16	√	√	√	√	√	√	√	√	√
DNFA30	Digital noise elimination enable register	DNFA30ENL	00_H	8	$FFC3\ 1E0C_H$	3	1, 8	√	√	√	√	√	√	√	√	√
DNFA31	Digital noise elimination control register	DNFA31CTL	00_H	8	$FFC3\ 1F00_H$	3	8	√	√	√	√	√	√	√	√	√
DNFA31	Digital noise elimination enable register	DNFA31EN	0000_H	16	$FFC3\ 1F04_H$	3	16	√	√	√	√	√	√	√	√	√
DNFA31	Digital noise elimination enable register	DNFA31ENL	00_H	8	$FFC3\ 1F0C_H$	3	1, 8	√	√	√	√	√	√	√	√	√
DNFA32	Digital noise elimination control register	DNFA32CTL	00_H	8	$FFC3\ 2000_H$	3	8	√	√	√	√	√	√	√	√	√
DNFA32	Digital noise elimination enable register	DNFA32EN	0000_H	16	$FFC3\ 2004_H$	3	16	√	√	√	√	√	√	√	√	√
DNFA32	Digital noise elimination enable register	DNFA32ENL	00_H	8	$FFC3\ 200C_H$	3	1, 8	√	√	√	√	√	√	√	√	√
DNFA33	Digital noise elimination control register	DNFA33CTL	00_H	8	$FFC3\ 2100_H$	3	8	√	√	√	√	√	√	√	√	√
DNFA33	Digital noise elimination enable register	DNFA33EN	0000_H	16	$FFC3\ 2104_H$	3	16	√	√	√	√	√	√	√	√	√
DNFA33	Digital noise elimination enable register	DNFA33ENL	00_H	8	$FFC3\ 210C_H$	3	1, 8	√	√	√	√	√	√	√	√	√
DNFA34	Digital noise elimination control register	DNFA34CTL	00_H	8	$FFC3\ 2200_H$	3	8	√	√	√	√	√	√	√	√	√
DNFA34	Digital noise elimination enable register	DNFA34EN	0000_H	16	$FFC3\ 2204_H$	3	16	√	√	√	√	√	√	√	√	√
DNFA34	Digital noise elimination enable register	DNFA34ENL	00_H	8	$FFC3\ 220C_H$	3	1, 8	√	√	√	√	√	√	√	√	√
DNFA35	Digital noise elimination control register	DNFA35CTL	00_H	8	$FFC3\ 2300_H$	3	8	√	√	√	√	√	√	√	√	√
DNFA35	Digital noise elimination enable register	DNFA35EN	0000_H	16	$FFC3\ 2304_H$	3	16	√	√	√	√	√	√	√	√	√
DNFA35	Digital noise elimination enable register	DNFA35ENL	00_H	8	$FFC3\ 230C_H$	3	1, 8	√	√	√	√	√	√	√	√	√

Table A.1 List of Registers (16/124)

Module	Register	Symbol	Value after Reset	Number of Bits	Address	Peripheral IP group	Access Size	Reset Source*1							Access Authority*1	
								POCRES	CVMRES	EXTRES	DBRES	ECMRES	BISTRES	SWRES	SV	UM
DNFA36	Digital noise elimination control register	DNFA36CTL	00_H	8	$FFC3\ 2400_H$	3	8	√	√	√	√	√	√	√	√	√
DNFA36	Digital noise elimination enable register	DNFA36EN	0000_H	16	$FFC3\ 2404_H$	3	16	√	√	√	√	√	√	√	√	√
DNFA36	Digital noise elimination enable register	DNFA36ENL	00_H	8	$FFC3\ 240C_H$	3	1, 8	√	√	√	√	√	√	√	√	√
DNFA37	Digital noise elimination control register	DNFA37CTL	00_H	8	$FFC3\ 2500_H$	3	8	√	√	√	√	√	√	√	√	√
DNFA37	Digital noise elimination enable register	DNFA37EN	0000_H	16	$FFC3\ 2504_H$	3	16	√	√	√	√	√	√	√	√	√
DNFA37	Digital noise elimination enable register	DNFA37ENL	00_H	8	$FFC3\ 250C_H$	3	1, 8	√	√	√	√	√	√	√	√	√
DNFA38	Digital noise elimination control register	DNFA38CTL	00_H	8	$FFC3\ 2600_H$	3	8	√	√	√	√	√	√	√	√	√
DNFA38	Digital noise elimination enable register	DNFA38EN	0000_H	16	$FFC3\ 2604_H$	3	16	√	√	√	√	√	√	√	√	√
DNFA38	Digital noise elimination enable register	DNFA38ENL	00_H	8	$FFC3\ 260C_H$	3	1, 8	√	√	√	√	√	√	√	√	√
DNFA39	Digital noise elimination control register	DNFA39CTL	00_H	8	$FFC3\ 2700_H$	3	8	√	√	√	√	√	√	√	√	√
DNFA39	Digital noise elimination enable register	DNFA39EN	0000_H	16	$FFC3\ 2704_H$	3	16	√	√	√	√	√	√	√	√	√
DNFA39	Digital noise elimination enable register	DNFA39ENL	00_H	8	$FFC3\ 270C_H$	3	1, 8	√	√	√	√	√	√	√	√	√
DNFA40	Digital noise elimination control register	DNFA40CTL	00_H	8	$FFC3\ 2800_H$	3	8	√	√	√	√	√	√	√	√	√
DNFA40	Digital noise elimination enable register	DNFA40EN	0000_H	16	$FFC3\ 2804_H$	3	16	√	√	√	√	√	√	√	√	√
DNFA40	Digital noise elimination enable register	DNFA40ENL	00_H	8	$FFC3\ 280C_H$	3	1, 8	√	√	√	√	√	√	√	√	√
DNFA41	Digital noise elimination control register	DNFA41CTL	00_H	8	$FFC3\ 2900_H$	3	8	√	√	√	√	√	√	√	√	√
DNFA41	Digital noise elimination enable register	DNFA41EN	0000_H	16	$FFC3\ 2904_H$	3	16	√	√	√	√	√	√	√	√	√
DNFA41	Digital noise elimination enable register	DNFA41ENL	00_H	8	$FFC3\ 290C_H$	3	1, 8	√	√	√	√	√	√	√	√	√
DNFA42	Digital noise elimination control register	DNFA42CTL	00_H	8	$FFC3\ 2A00_H$	3	8	√	√	√	√	√	√	√	√	√
DNFA42	Digital noise elimination enable register	DNFA42EN	0000_H	16	$FFC3\ 2A04_H$	3	16	√	√	√	√	√	√	√	√	√
DNFA42	Digital noise elimination enable register	DNFA42ENL	00_H	8	$FFC3\ 2A0C_H$	3	1, 8	√	√	√	√	√	√	√	√	√
DNFA43	Digital noise elimination control register	DNFA43CTL	00_H	8	$FFC3\ 2B00_H$	3	8	√	√	√	√	√	√	√	√	√
DNFA43	Digital noise elimination enable register	DNFA43EN	0000_H	16	$FFC3\ 2B04_H$	3	16	√	√	√	√	√	√	√	√	√
DNFA43	Digital noise elimination enable register	DNFA43ENL	00_H	8	$FFC3\ 2B0C_H$	3	1, 8	√	√	√	√	√	√	√	√	√
FCLA0	Filter control register	FCLA0CTL0	00_H	8	$FFC3\ 4000_H$	3	1, 8	√	√	√	√	√	√	√	√	√
FCLA1	Filter control register	FCLA1CTL0	00_H	8	$FFC3\ 4020_H$	3	1, 8	√	√	√	√	√	√	√	√	√
FCLA1	Filter control register	FCLA1CTL1	00_H	8	$FFC3\ 4024_H$	3	1, 8	√	√	√	√	√	√	√	√	√
FCLA1	Filter control register	FCLA1CTL2	00_H	8	$FFC3\ 4028_H$	3	1, 8	√	√	√	√	√	√	√	√	√
FCLA1	Filter control register	FCLA1CTL3	00_H	8	$FFC3\ 402C_H$	3	1, 8	√	√	√	√	√	√	√	√	√
FCLA1	Filter control register	FCLA1CTL4	00_H	8	$FFC3\ 4030_H$	3	1, 8	√	√	√	√	√	√	√	√	√
FCLA1	Filter control register	FCLA1CTL5	00_H	8	$FFC3\ 4034_H$	3	1, 8	√	√	√	√	√	√	√	√	√
FCLA1	Filter control register	FCLA1CTL6	00_H	8	$FFC3\ 4038_H$	3	1, 8	√	√	√	√	√	√	√	√	√
FCLA1	Filter control register	FCLA1CTL7	00_H	8	$FFC3\ 403C_H$	3	1, 8	√	√	√	√	√	√	√	√	√
FCLA2	Filter control register	FCLA2CTL0	00_H	8	$FFC3\ 4040_H$	3	1, 8	√	√	√	√	√	√	√	√	√
FCLA2	Filter control register	FCLA2CTL1	00_H	8	$FFC3\ 4044_H$	3	1, 8	√	√	√	√	√	√	√	√	√
FCLA2	Filter control register	FCLA2CTL2	00_H	8	$FFC3\ 4048_H$	3	1, 8	√	√	√	√	√	√	√	√	√
FCLA2	Filter control register	FCLA2CTL3	00_H	8	$FFC3\ 404C_H$	3	1, 8	√	√	√	√	√	√	√	√	√
FCLA2	Filter control register	FCLA2CTL4	00_H	8	$FFC3\ 4050_H$	3	1, 8	√	√	√	√	√	√	√	√	√
FCLA3	Filter control register	FCLA3CTL0	00_H	8	$FFC3\ 4060_H$	3	1, 8	√	√	√	√	√	√	√	√	√
FCLA3	Filter control register	FCLA3CTL1	00_H	8	$FFC3\ 4064_H$	3	1, 8	√	√	√	√	√	√	√	√	√
FCLA3	Filter control register	FCLA3CTL2	00_H	8	$FFC3\ 4068_H$	3	1, 8	√	√	√	√	√	√	√	√	√
FCLA3	Filter control register	FCLA3CTL3	00_H	8	$FFC3\ 406C_H$	3	1, 8	√	√	√	√	√	√	√	√	√
FCLA3	Filter control register	FCLA3CTL4	00_H	8	$FFC3\ 4070_H$	3	1, 8	√	√	√	√	√	√	√	√	√
FCLA3	Filter control register	FCLA3CTL5	00_H	8	$FFC3\ 4074_H$	3	1, 8	√	√	√	√	√	√	√	√	√
FCLA4	Filter control register	FCLA4CTL0	00_H	8	$FFC3\ 4080_H$	3	1, 8	√	√	√	√	√	√	√	√	√
FCLA4	Filter control register	FCLA4CTL1	00_H	8	$FFC3\ 4084_H$	3	1, 8	√	√	√	√	√	√	√	√	√
PBG	PBG3A protection register 0	FSGD3ADPROT0	$07FF\ FFFF_H$	32	$FFC4\ 0000_H$	3	8, 16, 32	√	√	√	√	√	√	√	√	√
PBG	PBG3A protection register 1	FSGD3ADPROT1	$07FF\ FFFF_H$	32	$FFC4\ 0004_H$	3	8, 16, 32	√	√	√	√	√	√	√	√	√
PBG	PBG3A protection register 2	FSGD3ADPROT2	$07FF\ FFFF_H$	32	$FFC4\ 0008_H$	3	8, 16, 32	√	√	√	√	√	√	√	√	√
PBG	PBG3A protection register 3	FSGD3ADPROT3	$07FF\ FFFF_H$	32	$FFC4\ 000C_H$	3	8, 16, 32	√	√	√	√	√	√	√	√	√
PBG	PBG3A protection register 4	FSGD3ADPROT4	$07FF\ FFFF_H$	32	$FFC4\ 0010_H$	3	8, 16, 32	√	√	√	√	√	√	√	√	√
PBG	PBG3A protection register 5	FSGD3ADPROT5	$07FF\ FFFF_H$	32	$FFC4\ 0014_H$	3	8, 16, 32	√	√	√	√	√	√	√	√	√
PBG	PBG3A protection register 6	FSGD3ADPROT6	$07FF\ FFFF_H$	32	$FFC4\ 0018_H$	3	8, 16, 32	√	√	√	√	√	√	√	√	√

Table A.1 List of Registers (17/124)

Module	Register	Symbol	Value after Reset	Number of Bits	Address	Peripheral IP group	Access Size	Reset Source*1							Access Authority*1	
								POCRES	CVMRES	EXTRES	DBRES	ECMRES	BISTRES	SWRES	SV	UM
PBG	PBG3A protection register 7	FSGD3ADPROT7	07FF FFFF$_H$	32	FFC4 001C$_H$	3	8, 16, 32	√	√	√	√	√	√	√	√	√
PBG	PBG3A protection register 8	FSGD3ADPROT8	07FF FFFF$_H$	32	FFC4 0020$_H$	3	8, 16, 32	√	√	√	√	√	√	√	√	√
PBG	PBG3A protection register 9	FSGD3ADPROT9	07FF FFFF$_H$	32	FFC4 0024$_H$	3	8, 16, 32	√	√	√	√	√	√	√	√	√
PBG	PBG3A protection register 10	FSGD3ADPROT10	07FF FFFF$_H$	32	FFC4 0028$_H$	3	8, 16, 32	√	√	√	√	√	√	√	√	√
PBG	PBG3A protection register 11	FSGD3ADPROT11	07FF FFFF$_H$	32	FFC4 002C$_H$	3	8, 16, 32	√	√	√	√	√	√	√	√	√
PBG	PBG3A error control register	ERRSLV3ACTL	0000 0000$_H$	32	FFC4 0040$_H$	3	8, 16, 32	√	√	√	√	√	√	√	√	√
PBG	PBG3A error status register	ERRSLV3ASTAT	0000 0000$_H$	32	FFC4 0044$_H$	3	8, 16, 32	√	√	√	√	√	√	√	√	√
PBG	PBG3A error address register	ERRSLV3AADDR	0000 0000$_H$	32	FFC4 0048$_H$	3	32	√	√	√	√	√	√	√	√	√
PBG	PBG3A error type register	ERRSLV3ATYPE	0000 0000$_H$	32	FFC4 004C$_H$	3	16, 32	√	√	√	√	√	√	√	√	√
PBG	PBG0A protection register 0	FSGD0ADPROT0	07FF FFFF$_H$	32	FFC4 C000$_H$	0	8, 16, 32	√	√	√	√	√	√	√	√	√
PBG	PBG0A protection register 1	FSGD0ADPROT1	07FF FFFF$_H$	32	FFC4 C004$_H$	0	8, 16, 32	√	√	√	√	√	√	√	√	√
PBG	PBG0A error control register	ERRSLV0ACTL	0000 0000$_H$	32	FFC4 C800$_H$	0	8, 16, 32	√	√	√	√	√	√	√	√	√
PBG	PBG0A error status register	ERRSLV0ASTAT	0000 0000$_H$	32	FFC4 C804$_H$	0	8, 16, 32	√	√	√	√	√	√	√	√	√
PBG	PBG0A error address register	ERRSLV0AADDR	0000 0000$_H$	32	FFC4 C808$_H$	0	32	√	√	√	√	√	√	√	√	√
PBG	PBG0A error type register	ERRSLV0ATYPE	0000 0000$_H$	32	FFC4 C80C$_H$	0	16, 32	√	√	√	√	√	√	√	√	√
PDMACOMP	DMA control register	PDMA_COMP_CNTRL	0000 0000$_H$	32	FFC4 CA00$_H$	0	32	√	√	√	√	√	√	√	√	√
FACI	FCU firm area selecting register	FCUFAREA	1 at start-up of the serial programming mode.	8	FFC5 9008$_H$	0	8	√	√	√	√	√	√	√	√	√
FLASH	Data flash memory read cycle setting register	EEPRDCYCL	0F$_H$	8	FFC5 9810$_H$	0	8	√	√	√	√	√	√	√	√	√
ECCIC1	Instruction cache data RAM ECC control register (PE1)	IDECCCTL_PE1	0000 0000$_H$	32	FFC6 0400$_H$	0	16, 32	√	√	√	√	√	√	√	√	√
ECCIC1	Instruction cache data RAM error information control register (PE1)	IDERRINT_PE1	0000 0000$_H$	32	FFC6 0404$_H$	0	8, 16, 32	√	√	√	√	√	√	√	√	√
ECCIC1	Instruction cache data RAM error status clear register (PE1)	IDSTCLR_PE1	0000 0000$_H$	32	FFC6 0408$_H$	0	8, 16, 32	√	√	√	√	√	√	√	√	√
ECCIC1	Instruction cache data RAM error count overflow status register (PE1)	IDOVFSTR_PE1	0000 0000$_H$	32	FFC6 040C$_H$	0	8, 16, 32	√	√	√	√	√	√	√	√	√
ECCIC1	Instruction cache data RAM 1st error status register (PE1)	ID1STERSTR_PE1	0000 0000$_H$	32	FFC6 0410$_H$	0	8, 16, 32	√	√	√	√	√	√	√	√	√
ECCIC1	Instruction cache data RAM (bank 0) 1st error address register (PE1)	ID1STEADR0_PE1	0000 0000$_H$	32	FFC6 0450$_H$	0	8, 16, 32	√	√	√	√	√	√	√	√	√
ECCIC1	Instruction cache data RAM (bank 1) 1st error address register (PE1)	ID1STEADR1_PE1	0000 0000$_H$	32	FFC6 0454$_H$	0	8, 16, 32	√	√	√	√	√	√	√	√	√
ECCIC1	Instruction cache tag RAM ECC control register (PE1)	ITECCCTL_PE1	0000 0000$_H$	32	FFC6 1400$_H$	0	16, 32	√	√	√	√	√	√	√	√	√
ECCIC1	Instruction cache tag RAM error information control register (PE1)	ITERRINT_PE1	0000 0000$_H$	32	FFC6 1404$_H$	0	8, 16, 32	√	√	√	√	√	√	√	√	√
ECCIC1	Instruction cache tag RAM error status clear register (PE1)	ITSTCLR_PE1	0000 0000$_H$	32	FFC6 1408$_H$	0	8, 16, 32	√	√	√	√	√	√	√	√	√
ECCIC1	Instruction cache tag RAM error count overflow status register (PE1)	ITOVFSTR_PE1	0000 0000$_H$	32	FFC6 140C$_H$	0	8, 16, 32	√	√	√	√	√	√	√	√	√
ECCIC1	Instruction cache tag RAM 1st error status clear register (PE1)	IT1STERSTR_PE1	0000 0000$_H$	32	FFC6 1410$_H$	0	8, 16, 32	√	√	√	√	√	√	√	√	√
ECCIC1	Instruction cache tag RAM (bank 0) 1st error address register (PE1)	IT1STEADR0_PE1	0000 0000$_H$	32	FFC6 1450$_H$	0	8, 16, 32	√	√	√	√	√	√	√	√	√
ECCFLI	Code flash address parity control register	CFAPCTL	0000 0000$_H$	32	FFC6 2000$_H$	0	16, 32	√	√	√	√	√	√	√	√	√
ECCFLI	Code flash ECC control register (VCI)	CFECCCTL_VCI	0000 0000$_H$	32	FFC6 2200$_H$	0	16, 32	√	√	√	√	√	√	√	√	√
ECCFLI	Code flash error information control register (VCI)	CFERRINT_VCI	0000 0006$_H$	32	FFC6 2204$_H$	0	8, 16, 32	√	√	√	√	√	√	√	√	√
ECCFLI	Code flash status clear register (VCI)	CFSTCLR_VCI	0000 0000$_H$	32	FFC6 2208$_H$	0	8, 16, 32	√	√	√	√	√	√	√	√	√
ECCFLI	Code flash error count overflow status register (VCI)	CFOVFSTR_VCI	0000 0000$_H$	32	FFC6 220C$_H$	0	8, 16, 32	√	√	√	√	√	√	√	√	√
ECCFLI	Code flash 1st error status register (VCI)	CF1STERSTR_VCI	0000 0000$_H$	32	FFC6 2210$_H$	0	8, 16, 32	√	√	√	√	√	√	√	√	√
ECCFLI	Code flash 1st error address register (VCI)	CF1STEADR0_VCI	0000 0000$_H$	32	FFC6 2250$_H$	0	8, 16, 32	√	√	√	√	√	√	√	√	√
ECCFLI	Code flash sub-test control register (VCI)	CFSTSTCTL_VCI	0000 0000$_H$	32	FFC6 2350$_H$	0	16, 32	√	√	√	√	√	√	√	√	√
ECCFLI	Code flash ECC control register (PE1)	CFECCCTL_PE1	0000 0000$_H$	32	FFC6 2400$_H$	0	16, 32	√	√	√	√	√	√	√	√	√
ECCFLI	Code flash error information control register (PE1)	CFERRINT_PE1	0000 0006$_H$	32	FFC6 2404$_H$	0	8, 16, 32	√	√	√	√	√	√	√	√	√
ECCFLI	Code flash status clear register (PE1)	CFSTCLR_PE1	0000 0000$_H$	32	FFC6 2408$_H$	0	8, 16, 32	√	√	√	√	√	√	√	√	√
ECCFLI	Code flash error count overflow status register (PE1)	CFOVFSTR_PE1	0000 0000$_H$	32	FFC6 240C$_H$	0	8, 16, 32	√	√	√	√	√	√	√	√	√
ECCFLI	Code flash 1st error status register (PE1)	CF1STERSTR_PE1	0000 0000$_H$	32	FFC6 2410$_H$	0	8, 16, 32	√	√	√	√	√	√	√	√	√
ECCFLI	Code flash 1st error address register (PE1)	CF1STEADR0_PE1	0000 0000$_H$	32	FFC6 2450$_H$	0	8, 16, 32	√	√	√	√	√	√	√	√	√
ECCFLI	Code flash sub-test control register (PE1)	CFSTSTCTL_PE1	0000 0000$_H$	32	FFC6 2550$_H$	0	16, 32	√	√	√	√	√	√	√	√	√
ECCEEP	Data flash ECC control register	DFECCCTL	0000$_H$	16	FFC6 2C00$_H$	0	16	√	√	√	√	√	√	√	√	√
ECCEEP	Data flash error status register	DFERSTR	00$_H$	8	FFC6 2C04$_H$	0	8	√	√	√	√	√	√	√	√	√

Table A.1 List of Registers (18/124)

Module	Register	Symbol	Value after Reset	Number of Bits	Address	Peripheral IP group	Access Size	Reset Source*1							Access Authority*1	
								POCRES	CVMRES	EXTRES	DBRES	ECMRES	BISTRES	SWRES	SV	UM
ECCEEP	Data flash error status clear register	DFERSTC	00_H	8	$FFC6\ 2C08_H$	0	8	√	√	√	√	√	√	√	√	√
ECCEEP	Data flash error overflow status register	DFOVFSTR	00_H	8	$FFC6\ 2C0C_H$	0	8	√	√	√	√	√	√	√	√	√
ECCEEP	Data flash error overflow status clear register	DFOVFSTC	00_H	8	$FFC6\ 2C10_H$	0	8	√	√	√	√	√	√	√	√	√
ECCEEP	Data flash error notification control register	DFERRINT	02_H	8	$FFC6\ 2C14_H$	0	8	√	√	√	√	√	√	√	√	√
ECCEEP	Data flash 1st error address register	DFEADR	$0000\ 0000_H$	32	$FFC6\ 2C18_H$	0	32	√	√	√	√	√	√	√	√	√
ECCEEP	Data flash test control register	DFTSTCTL	0000_H	16	$FFC6\ 2C1C_H$	0	16	√	√	√	√	√	√	√	√	√
ECCCPU1	Local RAM test control register	LRTSTCTL_PE1	$0000\ 0000_H$	32	$FFC6\ 5004_H$	0	16, 32	√	√	√	√	√	√	√	√	√
ECCCPU1	Local RAM test data read buffer 0	LRTDATBF0_PE1	$0000\ 0000_H$	32	$FFC6\ 5008_H$	0	32	√	√	√	√	√	√	√	√	√
ECCCPU1	Local RAM test data read buffer 1	LRTDATBF1_PE1	$0000\ 0000_H$	32	$FFC6\ 500C_H$	0	32	√	√	√	√	√	√	√	√	√
ECCCPU1	Local RAM ECC control register (PE1)	LRECCCTL_PE1	$0000\ 0000_H$	32	$FFC6\ 5400_H$	0	16, 32	√	√	√	√	√	√	√	√	√
ECCCPU1	Local RAM error information control register (PE1)	LRERRINT_PE1	$0000\ 0006_H$	32	$FFC6\ 5404_H$	0	8, 16, 32	√	√	√	√	√	√	√	√	√
ECCCPU1	Local RAM status clear register (PE1)	LRSTCLR_PE1	$0000\ 0000_H$	32	$FFC6\ 5408_H$	0	8, 16, 32	√	√	√	√	√	√	√	√	√
ECCCPU1	Local RAM error count overflow status register (PE1)	LROVFSTR_PE1	$0000\ 0000_H$	32	$FFC6\ 540C_H$	0	8, 16, 32	√	√	√	√	√	√	√	√	√
ECCCPU1	Local RAM 1st error status register (PE1)	LR1STERSTR_PE1	$0000\ 0000_H$	32	$FFC6\ 5410_H$	0	8, 16, 32	√	√	√	√	√	√	√	√	√
ECCCPU1	Local RAM 1st error address register 0 (PE1)	LR1STEADR0_PE1	$0000\ 0000_H$	32	$FFC6\ 5450_H$	0	8, 16, 32	√	√	√	√	√	√	√	√	√
ECCCPU1	Local RAM 1st error address register 1 (PE1)	LR1STEADR1_PE1	$0000\ 0000_H$	32	$FFC6\ 5454_H$	0	8, 16, 32	√	√	√	√	√	√	√	√	√
ECCCPU1	Local RAM 1st error address register 2 (PE1)	LR1STEADR2_PE1	$0000\ 0000_H$	32	$FFC6\ 5458_H$	0	8, 16, 32	√	√	√	√	√	√	√	√	√
ECCCPU1	Local RAM 1st error address register 3 (PE1)	LR1STEADR3_PE1	$0000\ 0000_H$	32	$FFC6\ 545C_H$	0	8, 16, 32	√	√	√	√	√	√	√	√	√
APDP	P-Bus data parity status register INTC2	APDPERRST_INTC2	$0000\ 0000_H$	32	$FFC6\ 8800_H$	0	8, 16, 32	√	√	√	√	√	√	√	√	√
APDP	P-Bus data parity status clear register INTC2	APDPERRSTC_INTC2	$0000\ 0000_H$	32	$FFC6\ 8804_H$	0	8, 16, 32	√	√	√	√	√	√	√	√	√
APDP	P-Bus data parity test mode control register INTC2	APDPTMC_INTC2	$0000\ 0000_H$	32	$FFC6\ 8808_H$	0	16, 32	√	√	√	√	√	√	√	√	√
APDP	P-Bus data parity error address register INTC2	APDPERRADR_INTC2	$0000\ 0000_H$	32	$FFC6\ 880C_H$	0	32	√	√	√	√	√	√	√	√	√
APDP	P-Bus data parity status register PDMA	APDPERRST_PDMA	$0000\ 0000_H$	32	$FFC6\ 8900_H$	0	8, 16, 32	√	√	√	√	√	√	√	√	√
APDP	P-Bus data parity status clear register PDMA	APDPERRSTC_PDMA	$0000\ 0000_H$	32	$FFC6\ 8904_H$	0	8, 16, 32	√	√	√	√	√	√	√	√	√
APDP	P-Bus data parity test mode control register PDMA	APDPTMC_PDMA	$0000\ 0000_H$	32	$FFC6\ 8908_H$	0	16, 32	√	√	√	√	√	√	√	√	√
APDP	P-Bus data parity error address register PDMA	APDPERRADR_PDMA	$0000\ 0000_H$	32	$FFC6\ 890C_H$	0	32	√	√	√	√	√	√	√	√	√
ECCCSIH0	ECC control register	ECCCSIH0CTL	$0000\ 0X1X_H$	32	$FFC7\ 0000_H$	2	8, 16, 32	√	√	√	√	√	√	√	√	√
ECCCSIH0	ECC test mode control register	ECCCSIH0TMC	0000_H	16	$FFC7\ 0004_H$	2	8, 16	√	√	√	√	√	√	√	√	√
ECCCSIH0	ECC redundant bit data control test register	ECCCSIH0TRC	$0000\ 0000_H$	32	$FFC7\ 0008_H$	2	32	√	√	√	√	√	√	√	√	√
ECCCSIH0	ECC encoder and decoder data test register	ECCCSIH0TED	$0000\ 0000_H$	32	$FFC7\ 000C_H$	2	32	√	√	√	√	√	√	√	√	√
ECCCSIH0	ECC error address register	ECCCSIH0EAD0	$0000\ 0000_H$	32	$FFC7\ 0010_H$	2	32	√	√	√	√	√	√	√	√	√
ECCCSIH1	ECC control register	ECCCSIH1CTL	$0000\ 0X1X_H$	32	$FFC7\ 0040_H$	2	8, 16, 32	√	√	√	√	√	√	√	√	√
ECCCSIH1	ECC test mode control register	ECCCSIH1TMC	0000_H	16	$FFC7\ 0044_H$	2	8, 16	√	√	√	√	√	√	√	√	√
ECCCSIH1	ECC redundant bit data control test register	ECCCSIH1TRC	$0000\ 0000_H$	32	$FFC7\ 0048_H$	2	32	√	√	√	√	√	√	√	√	√
ECCCSIH1	ECC encoder and decoder data test register	ECCCSIH1TED	$0000\ 0000_H$	32	$FFC7\ 004C_H$	2	32	√	√	√	√	√	√	√	√	√
ECCCSIH1	ECC error address register	ECCCSIH1EAD0	$0000\ 0000_H$	32	$FFC7\ 0050_H$	2	32	√	√	√	√	√	√	√	√	√
ECCCSIH2	ECC control register	ECCCSIH2CTL	$0000\ 0X1X_H$	32	$FFC7\ 0080_H$	2	8, 16, 32	√	√	√	√	√	√	√	√	√
ECCCSIH2	ECC test mode control register	ECCCSIH2TMC	0000_H	16	$FFC7\ 0084_H$	2	8, 16	√	√	√	√	√	√	√	√	√
ECCCSIH2	ECC redundant bit data control test register	ECCCSIH2TRC	$0000\ 0000_H$	32	$FFC7\ 0088_H$	2	32	√	√	√	√	√	√	√	√	√
ECCCSIH2	ECC encoder and decoder data test register	ECCCSIH2TED	$0000\ 0000_H$	32	$FFC7\ 008C_H$	2	32	√	√	√	√	√	√	√	√	√
ECCCSIH2	ECC error address register	ECCCSIH2EAD0	$0000\ 0000_H$	32	$FFC7\ 0090_H$	2	32	√	√	√	√	√	√	√	√	√
ECCCSIH3	ECC control register	ECCCSIH3CTL	$0000\ 0X1X_H$	32	$FFC7\ 00C0_H$	2	8, 16, 32	√	√	√	√	√	√	√	√	√
ECCCSIH3	ECC test mode control register	ECCCSIH3TMC	0000_H	16	$FFC7\ 00C4_H$	2	8, 16	√	√	√	√	√	√	√	√	√
ECCCSIH3	ECC redundant bit data control test register	ECCCSIH3TRC	$0000\ 0000_H$	32	$FFC7\ 00C8_H$	2	32	√	√	√	√	√	√	√	√	√
ECCCSIH3	ECC encoder and decoder data test register	ECCCSIH3TED	$0000\ 0000_H$	32	$FFC7\ 00CC_H$	2	32	√	√	√	√	√	√	√	√	√
ECCCSIH3	ECC error address register	ECCCSIH3EAD0	$0000\ 0000_H$	32	$FFC7\ 00D0_H$	2	32	√	√	√	√	√	√	√	√	√
ECCRCAN0	ECC control register	ECCRCAN0CTL	$0000\ 0X1X_H$	32	$FFC7\ 1000_H$	2	8, 16, 32	√	√	√	√	√	√	√	√	√
ECCRCAN0	ECC test mode control register	ECCRCAN0TMC	0000_H	16	$FFC7\ 1004_H$	2	8, 16	√	√	√	√	√	√	√	√	√
ECCRCAN0	ECC redundant bit data control test register	ECCRCAN0TRC	$0000\ 0000_H$	32	$FFC7\ 1008_H$	2	32	√	√	√	√	√	√	√	√	√
ECCRCAN0	ECC encoder and decoder data test register	ECCRCAN0TED	$0000\ 0000_H$	32	$FFC7\ 100C_H$	2	32	√	√	√	√	√	√	√	√	√
ECCRCAN0	ECC error address register	ECCRCAN0EAD0	$0000\ 0000_H$	32	$FFC7\ 1010_H$	2	32	√	√	√	√	√	√	√	√	√
ECCFLX0	ECC control register	ECCFLX0CTL	$0000\ 0X1X_H$	32	$FFC7\ 2000_H$	2	8, 16, 32	√	√	√	√	√	√	√	√	√
ECCFLX0	ECC test mode control register	ECCFLX0TMC	0000_H	16	$FFC7\ 2004_H$	2	8, 16	√	√	√	√	√	√	√	√	√

Table A.1 List of Registers (19/124)

Module	Register	Symbol	Value after Reset	Number of Bits	Address	Peripheral IP group	Access Size	Reset Source*1							Access Authority*1	
								POCRES	CVMRES	EXTRES	DBRES	ECMRES	BISTRES	SWRES	SV	UM
ECCFLX0	ECC redundant bit data control test register	ECCFLX0TRC	$0000\ 0000_H$	32	$FFC7\ 2008_H$	2	32	√	√	√	√	√	√	√	√	√
ECCFLX0	ECC encoder and decoder data test register	ECCFLX0TED	$0000\ 0000_H$	32	$FFC7\ 200C_H$	2	32	√	√	√	√	√	√	√	√	√
ECCFLX0	ECC error address register	ECCFLX0EAD0	$0000\ 0000_H$	32	$FFC7\ 2010_H$	2	32	√	√	√	√	√	√	√	√	√
ECCFLX0T1	ECC control register	ECCFLX0T1CTL	$0000\ 0X1X_H$	32	$FFC7\ 2040_H$	2	8, 16, 32	√	√	√	√	√	√	√	√	√
ECCFLX0T1	ECC test mode control register	ECCFLX0T1TMC	0000_H	16	$FFC7\ 2044_H$	2	8, 16	√	√	√	√	√	√	√	√	√
ECCFLX0T1	ECC redundant bit data control test register	ECCFLX0T1TRC	$0000\ 0000_H$	32	$FFC7\ 2048_H$	2	32	√	√	√	√	√	√	√	√	√
ECCFLX0T1	ECC encoder and decoder data test register	ECCFLX0T1TED	$0000\ 0000_H$	32	$FFC7\ 204C_H$	2	32	√	√	√	√	√	√	√	√	√
ECCFLX0T1	ECC error address register	ECCFLX0T1EAD0	$0000\ 0000_H$	32	$FFC7\ 2050_H$	2	32	√	√	√	√	√	√	√	√	√
ECCFLX0T0	ECC control register	ECCFLX0T0CTL	$0000\ 0X1X_H$	32	$FFC7\ 2080_H$	2	8, 16, 32	√	√	√	√	√	√	√	√	√
ECCFLX0T0	ECC test mode control register	ECCFLX0T0TMC	0000_H	16	$FFC7\ 2084_H$	2	8, 16	√	√	√	√	√	√	√	√	√
ECCFLX0T0	ECC redundant bit data control test register	ECCFLX0T0TRC	$0000\ 0000_H$	32	$FFC7\ 2088_H$	2	32	√	√	√	√	√	√	√	√	√
ECCFLX0T0	ECC encoder and decoder data test register	ECCFLX0T0TED	$0000\ 0000_H$	32	$FFC7\ 208C_H$	2	32	√	√	√	√	√	√	√	√	√
ECCFLX0T0	ECC error address register	ECCFLX0T0EAD0	$0000\ 0000_H$	32	$FFC7\ 2090_H$	2	32	√	√	√	√	√	√	√	√	√
APDP	P-Bus data parity status register ADCTL00	APDPERRST_ADCTL00	$0000\ 0000_H$	32	$FFC8\ 0000_H$	3	8, 16, 32	√	√	√	√	√	√	√	√	√
APDP	P-Bus data parity status clear register ADCTL00	APDPERRSTC_ADCTL00	$0000\ 0000_H$	32	$FFC8\ 0004_H$	3	8, 16, 32	√	√	√	√	√	√	√	√	√
APDP	P-Bus data parity test mode control register ADCTL00	APDPTMC_ADCTL00	$0000\ 0000_H$	32	$FFC8\ 0008_H$	3	16, 32	√	√	√	√	√	√	√	√	√
APDP	P-Bus data parity error address register ADCTL00	APDPERRADR_ADCTL00	$0000\ 0000_H$	32	$FFC8\ 000C_H$	3	32	√	√	√	√	√	√	√	√	√
APDP	P-Bus data parity status register ADCTL10	APDPERRST_ADCTL10	$0000\ 0000_H$	32	$FFC8\ 0010_H$	3	8, 16, 32	√	√	√	√	√	√	√	√	√
APDP	P-Bus data parity status clear register ADCTL10	APDPERRSTC_ADCTL10	$0000\ 0000_H$	32	$FFC8\ 0014_H$	3	8, 16, 32	√	√	√	√	√	√	√	√	√
APDP	P-Bus data parity test mode control register ADCTL10	APDPTMC_ADCTL10	$0000\ 0000_H$	32	$FFC8\ 0018_H$	3	16, 32	√	√	√	√	√	√	√	√	√
APDP	P-Bus data parity error address register ADCTL10	APDPERRADR_ADCTL10	$0000\ 0000_H$	32	$FFC8\ 001C_H$	3	32	√	√	√	√	√	√	√	√	√
FLASH	Option Byte 0	OPBT0	Specified by the user.	32	$FFCD\ 0030_H$	3	32	√	√	√	√	√	√	—	√	√
FLASH	Option Byte 2	OPBT2	Specified by the user.	32	$FFCD\ 0038_H$	3	32	√	√	√	√	√	√	—	√	√
FLASH	Product name storage register	PRDNAME1	XXXXXXXX_H	32	$FFCD\ 00D0_H$	3	32	√	√	√	√	√	√	—	√	√
FLASH	Product name storage register	PRDNAME2	XXXXXXXX_H	32	$FFCD\ 00D4_H$	3	32	√	√	√	√	√	√	—	√	√
FLASH	Product name storage register	PRDNAME3	XXXXXXXX_H	32	$FFCD\ 00D8_H$	3	32	√	√	√	√	√	√	—	√	√
FLASH	Product name storage register	PRDNAME4	XXXXXXXX_H	32	$FFCD\ 00DC_H$	3	32	√	√	√	√	√	√	—	√	√
FLASH	Temperature sensor reference storage register	TSNREFD	Undefined (the fixed value is set at the time of shipping)	32	$FFCD\ 019C_H$	3	32	√	√	√	√	√	√	—	√	√
MODC	Operating mode indicating register	MODER	Undefined	8	$FFCD\ 13F4_H$	5	8	—	—	—	—	—	—	—	√	√
RSCAN0	Channel configuration register	RSCAN0C0CFG	$0000\ 0000_H$	32	$FFD2\ 0000_H$	2	8, 16, 32	√	√	√	√	√	√	√	√	√
RSCAN0	Channel control register	RSCAN0C0CTR	$0000\ 0005_H$	32	$FFD2\ 0004_H$	2	8, 16, 32	√	√	√	√	√	√	√	√	√
RSCAN0	Channel status register	RSCAN0C0STS	$0000\ 0005_H$	32	$FFD2\ 0008_H$	2	8, 16, 32	√	√	√	√	√	√	√	√	√
RSCAN0	Channel error flag register	RSCAN0C0ERFL	$0000\ 0000_H$	32	$FFD2\ 000C_H$	2	8, 16, 32	√	√	√	√	√	√	√	√	√
RSCAN0	Channel configuration register	RSCAN0C1CFG	$0000\ 0000_H$	32	$FFD2\ 0010_H$	2	8, 16, 32	√	√	√	√	√	√	√	√	√
RSCAN0	Channel control register	RSCAN0C1CTR	$0000\ 0005_H$	32	$FFD2\ 0014_H$	2	8, 16, 32	√	√	√	√	√	√	√	√	√
RSCAN0	Channel status register	RSCAN0C1STS	$0000\ 0005_H$	32	$FFD2\ 0018_H$	2	8, 16, 32	√	√	√	√	√	√	√	√	√
RSCAN0	Channel error flag register	RSCAN0C1ERFL	$0000\ 0000_H$	32	$FFD2\ 001C_H$	2	8, 16, 32	√	√	√	√	√	√	√	√	√
RSCAN0	Channel configuration register	RSCAN0C2CFG	$0000\ 0000_H$	32	$FFD2\ 0020_H$	2	8, 16, 32	√	√	√	√	√	√	√	√	√
RSCAN0	Channel control register	RSCAN0C2CTR	$0000\ 0005_H$	32	$FFD2\ 0024_H$	2	8, 16, 32	√	√	√	√	√	√	√	√	√
RSCAN0	Channel status register	RSCAN0C2STS	$0000\ 0005_H$	32	$FFD2\ 0028_H$	2	8, 16, 32	√	√	√	√	√	√	√	√	√
RSCAN0	Channel error flag register	RSCAN0C2ERFL	$0000\ 0000_H$	32	$FFD2\ 002C_H$	2	8, 16, 32	√	√	√	√	√	√	√	√	√
RSCAN0	Global configuration register	RSCAN0GCFG	$0000\ 0000_H$	32	$FFD2\ 0084_H$	2	8, 16, 32	√	√	√	√	√	√	√	√	√
RSCAN0	Global control register	RSCAN0GCTR	$0000\ 0005_H$	32	$FFD2\ 0088_H$	2	8, 16, 32	√	√	√	√	√	√	√	√	√
RSCAN0	Global status register	RSCAN0GSTS	$0000\ 000D_H$	32	$FFD2\ 008C_H$	2	8, 16, 32	√	√	√	√	√	√	√	√	√
RSCAN0	Global error flag register	RSCAN0GERFL	$0000\ 0000_H$	32	$FFD2\ 0090_H$	2	8, 16, 32	√	√	√	√	√	√	√	√	√
RSCAN0	Global timestamp counter register	RSCAN0GTSC	$0000\ 0000_H$	32	$FFD2\ 0094_H$	2	16, 32	√	√	√	√	√	√	√	√	√
RSCAN0	Receive rule entry control register	RSCAN0GAFLECTR	$0000\ 0000_H$	32	$FFD2\ 0098_H$	2	8, 16, 32	√	√	√	√	√	√	√	√	√
RSCAN0	Receive rule configuration register 0	RSCAN0GAFLCFG0	$0000\ 0000_H$	32	$FFD2\ 009C_H$	2	8, 16, 32	√	√	√	√	√	√	√	√	√
RSCAN0	Receive buffer number register	RSCAN0RMNB	$0000\ 0000_H$	32	$FFD2\ 00A4_H$	2	8, 16, 32	√	√	√	√	√	√	√	√	√
RSCAN0	Receive buffer new data register 0	RSCAN0RMND0	$0000\ 0000_H$	32	$FFD2\ 00A8_H$	2	8, 16, 32	√	√	√	√	√	√	√	√	√

Table A.1 List of Registers (20/124)

Module	Register	Symbol	Value after Reset	Number of Bits	Address	Peripheral IP group	Access Size	Reset Source*1							Access Authority*1	
								POCRES	CVMRES	EXTRES	DBRES	ECMRES	BISTRES	SWRES	SV	UM
RSCAN0	Receive buffer new data register 1	RSCAN0RMND1	0000 0000$_H$	32	FFD2 00AC$_H$	2	8, 16, 32	√	√	√	√	√	√	√	√	√
RSCAN0	Receive FIFO buffer configuration and control register 0	RSCAN0RFCC0	0000 0000$_H$	32	FFD2 00B8$_H$	2	8, 16, 32	√	√	√	√	√	√	√	√	√
RSCAN0	Receive FIFO buffer configuration and control register 1	RSCAN0RFCC1	0000 0000$_H$	32	FFD2 00BC$_H$	2	8, 16, 32	√	√	√	√	√	√	√	√	√
RSCAN0	Receive FIFO buffer configuration and control register 2	RSCAN0RFCC2	0000 0000$_H$	32	FFD2 00C0$_H$	2	8, 16, 32	√	√	√	√	√	√	√	√	√
RSCAN0	Receive FIFO buffer configuration and control register 3	RSCAN0RFCC3	0000 0000$_H$	32	FFD2 00C4$_H$	2	8, 16, 32	√	√	√	√	√	√	√	√	√
RSCAN0	Receive FIFO buffer configuration and control register 4	RSCAN0RFCC4	0000 0000$_H$	32	FFD2 00C8$_H$	2	8, 16, 32	√	√	√	√	√	√	√	√	√
RSCAN0	Receive FIFO buffer configuration and control register 5	RSCAN0RFCC5	0000 0000$_H$	32	FFD2 00CC$_H$	2	8, 16, 32	√	√	√	√	√	√	√	√	√
RSCAN0	Receive FIFO buffer configuration and control register 6	RSCAN0RFCC6	0000 0000$_H$	32	FFD2 00D0$_H$	2	8, 16, 32	√	√	√	√	√	√	√	√	√
RSCAN0	Receive FIFO buffer configuration and control register 7	RSCAN0RFCC7	0000 0000$_H$	32	FFD2 00D4$_H$	2	8, 16, 32	√	√	√	√	√	√	√	√	√
RSCAN0	Receive FIFO buffer status register 0	RSCAN0RFSTS0	0000 0001$_H$	32	FFD2 00D8$_H$	2	8, 16, 32	√	√	√	√	√	√	√	√	√
RSCAN0	Receive FIFO buffer status register 1	RSCAN0RFSTS1	0000 0001$_H$	32	FFD2 00DC$_H$	2	8, 16, 32	√	√	√	√	√	√	√	√	√
RSCAN0	Receive FIFO buffer status register 2	RSCAN0RFSTS2	0000 0001$_H$	32	FFD2 00E0$_H$	2	8, 16, 32	√	√	√	√	√	√	√	√	√
RSCAN0	Receive FIFO buffer status register 3	RSCAN0RFSTS3	0000 0001$_H$	32	FFD2 00E4$_H$	2	8, 16, 32	√	√	√	√	√	√	√	√	√
RSCAN0	Receive FIFO buffer status register 4	RSCAN0RFSTS4	0000 0001$_H$	32	FFD2 00E8$_H$	2	8, 16, 32	√	√	√	√	√	√	√	√	√
RSCAN0	Receive FIFO buffer status register 5	RSCAN0RFSTS5	0000 0001$_H$	32	FFD2 00EC$_H$	2	8, 16, 32	√	√	√	√	√	√	√	√	√
RSCAN0	Receive FIFO buffer status register 6	RSCAN0RFSTS6	0000 0001$_H$	32	FFD2 00F0$_H$	2	8, 16, 32	√	√	√	√	√	√	√	√	√
RSCAN0	Receive FIFO buffer status register 7	RSCAN0RFSTS7	0000 0001$_H$	32	FFD2 00F4$_H$	2	8, 16, 32	√	√	√	√	√	√	√	√	√
RSCAN0	Receive FIFO buffer pointer control register 0	RSCAN0RFPCTR0	0000 0000$_H$	32	FFD2 00F8$_H$	2	8, 16, 32	√	√	√	√	√	√	√	√	√
RSCAN0	Receive FIFO buffer pointer control register 1	RSCAN0RFPCTR1	0000 0000$_H$	32	FFD2 00FC$_H$	2	8, 16, 32	√	√	√	√	√	√	√	√	√
RSCAN0	Receive FIFO buffer pointer control register 2	RSCAN0RFPCTR2	0000 0000$_H$	32	FFD2 0100$_H$	2	8, 16, 32	√	√	√	√	√	√	√	√	√
RSCAN0	Receive FIFO buffer pointer control register 3	RSCAN0RFPCTR3	0000 0000$_H$	32	FFD2 0104$_H$	2	8, 16, 32	√	√	√	√	√	√	√	√	√
RSCAN0	Receive FIFO buffer pointer control register 4	RSCAN0RFPCTR4	0000 0000$_H$	32	FFD2 0108$_H$	2	8, 16, 32	√	√	√	√	√	√	√	√	√
RSCAN0	Receive FIFO buffer pointer control register 5	RSCAN0RFPCTR5	0000 0000$_H$	32	FFD2 010C$_H$	2	8, 16, 32	√	√	√	√	√	√	√	√	√
RSCAN0	Receive FIFO buffer pointer control register 6	RSCAN0RFPCTR6	0000 0000$_H$	32	FFD2 0110$_H$	2	8, 16, 32	√	√	√	√	√	√	√	√	√
RSCAN0	Receive FIFO buffer pointer control register 7	RSCAN0RFPCTR7	0000 0000$_H$	32	FFD2 0114$_H$	2	8, 16, 32	√	√	√	√	√	√	√	√	√
RSCAN0	Transmit/receive FIFO buffer configuration and control register 0	RSCAN0CFCC0	0000 0000$_H$	32	FFD2 0118$_H$	2	8, 16, 32	√	√	√	√	√	√	√	√	√
RSCAN0	Transmit/receive FIFO buffer configuration and control register 1	RSCAN0CFCC1	0000 0000$_H$	32	FFD2 011C$_H$	2	8, 16, 32	√	√	√	√	√	√	√	√	√
RSCAN0	Transmit/receive FIFO buffer configuration and control register 2	RSCAN0CFCC2	0000 0000$_H$	32	FFD2 0120$_H$	2	8, 16, 32	√	√	√	√	√	√	√	√	√
RSCAN0	Transmit/receive FIFO buffer configuration and control register 3	RSCAN0CFCC3	0000 0000$_H$	32	FFD2 0124$_H$	2	8, 16, 32	√	√	√	√	√	√	√	√	√
RSCAN0	Transmit/receive FIFO buffer configuration and control register 4	RSCAN0CFCC4	0000 0000$_H$	32	FFD2 0128$_H$	2	8, 16, 32	√	√	√	√	√	√	√	√	√
RSCAN0	Transmit/receive FIFO buffer configuration and control register 5	RSCAN0CFCC5	0000 0000$_H$	32	FFD2 012C$_H$	2	8, 16, 32	√	√	√	√	√	√	√	√	√
RSCAN0	Transmit/receive FIFO buffer configuration and control register 6	RSCAN0CFCC6	0000 0000$_H$	32	FFD2 0130$_H$	2	8, 16, 32	√	√	√	√	√	√	√	√	√
RSCAN0	Transmit/receive FIFO buffer configuration and control register 7	RSCAN0CFCC7	0000 0000$_H$	32	FFD2 0134$_H$	2	8, 16, 32	√	√	√	√	√	√	√	√	√
RSCAN0	Transmit/receive FIFO buffer configuration and control register 8	RSCAN0CFCC8	0000 0000$_H$	32	FFD2 0138$_H$	2	8, 16, 32	√	√	√	√	√	√	√	√	√
RSCAN0	Transmit/receive FIFO buffer status register 0	RSCAN0CFSTS0	0000 0001$_H$	32	FFD2 0178$_H$	2	8, 16, 32	√	√	√	√	√	√	√	√	√
RSCAN0	Transmit/receive FIFO buffer status register 1	RSCAN0CFSTS1	0000 0001$_H$	32	FFD2 017C$_H$	2	8, 16, 32	√	√	√	√	√	√	√	√	√
RSCAN0	Transmit/receive FIFO buffer status register 2	RSCAN0CFSTS2	0000 0001$_H$	32	FFD2 0180$_H$	2	8, 16, 32	√	√	√	√	√	√	√	√	√
RSCAN0	Transmit/receive FIFO buffer status register 3	RSCAN0CFSTS3	0000 0001$_H$	32	FFD2 0184$_H$	2	8, 16, 32	√	√	√	√	√	√	√	√	√
RSCAN0	Transmit/receive FIFO buffer status register 4	RSCAN0CFSTS4	0000 0001$_H$	32	FFD2 0188$_H$	2	8, 16, 32	√	√	√	√	√	√	√	√	√
RSCAN0	Transmit/receive FIFO buffer status register 5	RSCAN0CFSTS5	0000 0001$_H$	32	FFD2 018C$_H$	2	8, 16, 32	√	√	√	√	√	√	√	√	√
RSCAN0	Transmit/receive FIFO buffer status register 6	RSCAN0CFSTS6	0000 0001$_H$	32	FFD2 0190$_H$	2	8, 16, 32	√	√	√	√	√	√	√	√	√
RSCAN0	Transmit/receive FIFO buffer status register 7	RSCAN0CFSTS7	0000 0001$_H$	32	FFD2 0194$_H$	2	8, 16, 32	√	√	√	√	√	√	√	√	√
RSCAN0	Transmit/receive FIFO buffer status register 8	RSCAN0CFSTS8	0000 0001$_H$	32	FFD2 0198$_H$	2	8, 16, 32	√	√	√	√	√	√	√	√	√
RSCAN0	Transmit/receive FIFO buffer pointer control register 0	RSCAN0CFPCTR0	0000 0000$_H$	32	FFD2 01D8$_H$	2	8, 16, 32	√	√	√	√	√	√	√	√	√
RSCAN0	Transmit/receive FIFO buffer pointer control register 1	RSCAN0CFPCTR1	0000 0000$_H$	32	FFD2 01DC$_H$	2	8, 16, 32	√	√	√	√	√	√	√	√	√
RSCAN0	Transmit/receive FIFO buffer pointer control register 2	RSCAN0CFPCTR2	0000 0000$_H$	32	FFD2 01E0$_H$	2	8, 16, 32	√	√	√	√	√	√	√	√	√
RSCAN0	Transmit/receive FIFO buffer pointer control register 3	RSCAN0CFPCTR3	0000 0000$_H$	32	FFD2 01E4$_H$	2	8, 16, 32	√	√	√	√	√	√	√	√	√
RSCAN0	Transmit/receive FIFO buffer pointer control register 4	RSCAN0CFPCTR4	0000 0000$_H$	32	FFD2 01E8$_H$	2	8, 16, 32	√	√	√	√	√	√	√	√	√

Table A.1 List of Registers (21/124)

Module	Register	Symbol	Value after Reset	Number of Bits	Address	Peripheral IP group	Access Size	Reset Source*1							Access Authority*1	
								POCRES	CVMRES	EXTRES	DBRES	ECMRES	BISTRES	SWRES	SV	UM
RSCAN0	Transmit/receive FIFO buffer pointer control register 5	RSCAN0CFPCTR5	$0000\ 0000_H$	32	$FFD2\ 01EC_H$	2	8, 16, 32	√	√	√	√	√	√	√	√	√
RSCAN0	Transmit/receive FIFO buffer pointer control register 6	RSCAN0CFPCTR6	$0000\ 0000_H$	32	$FFD2\ 01F0_H$	2	8, 16, 32	√	√	√	√	√	√	√	√	√
RSCAN0	Transmit/receive FIFO buffer pointer control register 7	RSCAN0CFPCTR7	$0000\ 0000_H$	32	$FFD2\ 01F4_H$	2	8, 16, 32	√	√	√	√	√	√	√	√	√
RSCAN0	Transmit/receive FIFO buffer pointer control register 8	RSCAN0CFPCTR8	$0000\ 0000_H$	32	$FFD2\ 01F8_H$	2	8, 16, 32	√	√	√	√	√	√	√	√	√
RSCAN0	FIFO empty status register	RSCAN0FESTS	$0001FFFF_H$	32	$FFD2\ 0238_H$	2	8, 16, 32	√	√	√	√	√	√	√	√	√
RSCAN0	FIFO full status register	RSCAN0FFSTS	$0000\ 0000_H$	32	$FFD2\ 023C_H$	2	8, 16, 32	√	√	√	√	√	√	√	√	√
RSCAN0	FIFO Msg lost status register	RSCAN0FMSTS	$0000\ 0000_H$	32	$FFD2\ 0240_H$	2	8, 16, 32	√	√	√	√	√	√	√	√	√
RSCAN0	Receive FIFO buffer interrupt flag status register	RSCAN0RFISTS	$0000\ 0000_H$	32	$FFD2\ 0244_H$	2	8, 16, 32	√	√	√	√	√	√	√	√	√
RSCAN0	Transmit/receive FIFO buffer RX interrupt flag status register	RSCAN0CFRISTS	$0000\ 0000_H$	32	$FFD2\ 0248_H$	2	8, 16, 32	√	√	√	√	√	√	√	√	√
RSCAN0	Transmit/receive FIFO buffer TX interrupt flag status register	RSCAN0CFTISTS	$0000\ 0000_H$	32	$FFD2\ 024C_H$	2	8, 16, 32	√	√	√	√	√	√	√	√	√
RSCAN0	Transmit buffer control register 0	RSCAN0TMC0	00_H	8	$FFD2\ 0250_H$	2	8	√	√	√	√	√	√	√	√	√
RSCAN0	Transmit buffer control register 1	RSCAN0TMC1	00_H	8	$FFD2\ 0251_H$	2	8	√	√	√	√	√	√	√	√	√
RSCAN0	Transmit buffer control register 2	RSCAN0TMC2	00_H	8	$FFD2\ 0252_H$	2	8	√	√	√	√	√	√	√	√	√
RSCAN0	Transmit buffer control register 3	RSCAN0TMC3	00_H	8	$FFD2\ 0253_H$	2	8	√	√	√	√	√	√	√	√	√
RSCAN0	Transmit buffer control register 4	RSCAN0TMC4	00_H	8	$FFD2\ 0254_H$	2	8	√	√	√	√	√	√	√	√	√
RSCAN0	Transmit buffer control register 5	RSCAN0TMC5	00_H	8	$FFD2\ 0255_H$	2	8	√	√	√	√	√	√	√	√	√
RSCAN0	Transmit buffer control register 6	RSCAN0TMC6	00_H	8	$FFD2\ 0256_H$	2	8	√	√	√	√	√	√	√	√	√
RSCAN0	Transmit buffer control register 7	RSCAN0TMC7	00_H	8	$FFD2\ 0257_H$	2	8	√	√	√	√	√	√	√	√	√
RSCAN0	Transmit buffer control register 8	RSCAN0TMC8	00_H	8	$FFD2\ 0258_H$	2	8	√	√	√	√	√	√	√	√	√
RSCAN0	Transmit buffer control register 9	RSCAN0TMC9	00_H	8	$FFD2\ 0259_H$	2	8	√	√	√	√	√	√	√	√	√
RSCAN0	Transmit buffer control register 10	RSCAN0TMC10	00_H	8	$FFD2\ 025A_H$	2	8	√	√	√	√	√	√	√	√	√
RSCAN0	Transmit buffer control register 11	RSCAN0TMC11	00_H	8	$FFD2\ 025B_H$	2	8	√	√	√	√	√	√	√	√	√
RSCAN0	Transmit buffer control register 12	RSCAN0TMC12	00_H	8	$FFD2\ 025C_H$	2	8	√	√	√	√	√	√	√	√	√
RSCAN0	Transmit buffer control register 13	RSCAN0TMC13	00_H	8	$FFD2\ 025D_H$	2	8	√	√	√	√	√	√	√	√	√
RSCAN0	Transmit buffer control register 14	RSCAN0TMC14	00_H	8	$FFD2\ 025E_H$	2	8	√	√	√	√	√	√	√	√	√
RSCAN0	Transmit buffer control register 15	RSCAN0TMC15	00_H	8	$FFD2\ 025F_H$	2	8	√	√	√	√	√	√	√	√	√
RSCAN0	Transmit buffer control register 16	RSCAN0TMC16	00_H	8	$FFD2\ 0260_H$	2	8	√	√	√	√	√	√	√	√	√
RSCAN0	Transmit buffer control register 17	RSCAN0TMC17	00_H	8	$FFD2\ 0261_H$	2	8	√	√	√	√	√	√	√	√	√
RSCAN0	Transmit buffer control register 18	RSCAN0TMC18	00_H	8	$FFD2\ 0262_H$	2	8	√	√	√	√	√	√	√	√	√
RSCAN0	Transmit buffer control register 19	RSCAN0TMC19	00_H	8	$FFD2\ 0263_H$	2	8	√	√	√	√	√	√	√	√	√
RSCAN0	Transmit buffer control register 20	RSCAN0TMC20	00_H	8	$FFD2\ 0264_H$	2	8	√	√	√	√	√	√	√	√	√
RSCAN0	Transmit buffer control register 21	RSCAN0TMC21	00_H	8	$FFD2\ 0265_H$	2	8	√	√	√	√	√	√	√	√	√
RSCAN0	Transmit buffer control register 22	RSCAN0TMC22	00_H	8	$FFD2\ 0266_H$	2	8	√	√	√	√	√	√	√	√	√
RSCAN0	Transmit buffer control register 23	RSCAN0TMC23	00_H	8	$FFD2\ 0267_H$	2	8	√	√	√	√	√	√	√	√	√
RSCAN0	Transmit buffer control register 24	RSCAN0TMC24	00_H	8	$FFD2\ 0268_H$	2	8	√	√	√	√	√	√	√	√	√
RSCAN0	Transmit buffer control register 25	RSCAN0TMC25	00_H	8	$FFD2\ 0269_H$	2	8	√	√	√	√	√	√	√	√	√
RSCAN0	Transmit buffer control register 26	RSCAN0TMC26	00_H	8	$FFD2\ 026A_H$	2	8	√	√	√	√	√	√	√	√	√
RSCAN0	Transmit buffer control register 27	RSCAN0TMC27	00_H	8	$FFD2\ 026B_H$	2	8	√	√	√	√	√	√	√	√	√
RSCAN0	Transmit buffer control register 28	RSCAN0TMC28	00_H	8	$FFD2\ 026C_H$	2	8	√	√	√	√	√	√	√	√	√
RSCAN0	Transmit buffer control register 29	RSCAN0TMC29	00_H	8	$FFD2\ 026D_H$	2	8	√	√	√	√	√	√	√	√	√
RSCAN0	Transmit buffer control register 30	RSCAN0TMC30	00_H	8	$FFD2\ 026E_H$	2	8	√	√	√	√	√	√	√	√	√
RSCAN0	Transmit buffer control register 31	RSCAN0TMC31	00_H	8	$FFD2\ 026F_H$	2	8	√	√	√	√	√	√	√	√	√
RSCAN0	Transmit buffer control register 32	RSCAN0TMC32	00_H	8	$FFD2\ 0270_H$	2	8	√	√	√	√	√	√	√	√	√
RSCAN0	Transmit buffer control register 33	RSCAN0TMC33	00_H	8	$FFD2\ 0271_H$	2	8	√	√	√	√	√	√	√	√	√
RSCAN0	Transmit buffer control register 34	RSCAN0TMC34	00_H	8	$FFD2\ 0272_H$	2	8	√	√	√	√	√	√	√	√	√
RSCAN0	Transmit buffer control register 35	RSCAN0TMC35	00_H	8	$FFD2\ 0273_H$	2	8	√	√	√	√	√	√	√	√	√
RSCAN0	Transmit buffer control register 36	RSCAN0TMC36	00_H	8	$FFD2\ 0274_H$	2	8	√	√	√	√	√	√	√	√	√
RSCAN0	Transmit buffer control register 37	RSCAN0TMC37	00_H	8	$FFD2\ 0275_H$	2	8	√	√	√	√	√	√	√	√	√
RSCAN0	Transmit buffer control register 38	RSCAN0TMC38	00_H	8	$FFD2\ 0276_H$	2	8	√	√	√	√	√	√	√	√	√
RSCAN0	Transmit buffer control register 39	RSCAN0TMC39	00_H	8	$FFD2\ 0277_H$	2	8	√	√	√	√	√	√	√	√	√
RSCAN0	Transmit buffer control register 40	RSCAN0TMC40	00_H	8	$FFD2\ 0278_H$	2	8	√	√	√	√	√	√	√	√	√
RSCAN0	Transmit buffer control register 41	RSCAN0TMC41	00_H	8	$FFD2\ 0279_H$	2	8	√	√	√	√	√	√	√	√	√
RSCAN0	Transmit buffer control register 42	RSCAN0TMC42	00_H	8	$FFD2\ 027A_H$	2	8	√	√	√	√	√	√	√	√	√

Table A.1 List of Registers (22/124)

Module	Register	Symbol	Value after Reset	Number of Bits	Address	Peripheral IP group	Access Size	Reset Source*1							Access Authority*1	
								POCRES	CVMRES	EXTRES	DBRES	ECMRES	BISTRES	SWRES	SV	UM
RSCAN0	Transmit buffer control register 43	RSCAN0TMC43	00_H	8	$FFD2\ 027B_H$	2	8	√	√	√	√	√	√	√	√	√
RSCAN0	Transmit buffer control register 44	RSCAN0TMC44	00_H	8	$FFD2\ 027C_H$	2	8	√	√	√	√	√	√	√	√	√
RSCAN0	Transmit buffer control register 45	RSCAN0TMC45	00_H	8	$FFD2\ 027D_H$	2	8	√	√	√	√	√	√	√	√	√
RSCAN0	Transmit buffer control register 46	RSCAN0TMC46	00_H	8	$FFD2\ 027E_H$	2	8	√	√	√	√	√	√	√	√	√
RSCAN0	Transmit buffer control register 47	RSCAN0TMC47	00_H	8	$FFD2\ 027F_H$	2	8	√	√	√	√	√	√	√	√	√
RSCAN0	Transmit buffer status register 0	RSCAN0TMSTS0	00_H	8	$FFD2\ 02D0_H$	2	8	√	√	√	√	√	√	√	√	√
RSCAN0	Transmit buffer status register 1	RSCAN0TMSTS1	00_H	8	$FFD2\ 02D1_H$	2	8	√	√	√	√	√	√	√	√	√
RSCAN0	Transmit buffer status register 2	RSCAN0TMSTS2	00_H	8	$FFD2\ 02D2_H$	2	8	√	√	√	√	√	√	√	√	√
RSCAN0	Transmit buffer status register 3	RSCAN0TMSTS3	00_H	8	$FFD2\ 02D3_H$	2	8	√	√	√	√	√	√	√	√	√
RSCAN0	Transmit buffer status register 4	RSCAN0TMSTS4	00_H	8	$FFD2\ 02D4_H$	2	8	√	√	√	√	√	√	√	√	√
RSCAN0	Transmit buffer status register 5	RSCAN0TMSTS5	00_H	8	$FFD2\ 02D5_H$	2	8	√	√	√	√	√	√	√	√	√
RSCAN0	Transmit buffer status register 6	RSCAN0TMSTS6	00_H	8	$FFD2\ 02D6_H$	2	8	√	√	√	√	√	√	√	√	√
RSCAN0	Transmit buffer status register 7	RSCAN0TMSTS7	00_H	8	$FFD2\ 02D7_H$	2	8	√	√	√	√	√	√	√	√	√
RSCAN0	Transmit buffer status register 8	RSCAN0TMSTS8	00_H	8	$FFD2\ 02D8_H$	2	8	√	√	√	√	√	√	√	√	√
RSCAN0	Transmit buffer status register 9	RSCAN0TMSTS9	00_H	8	$FFD2\ 02D9_H$	2	8	√	√	√	√	√	√	√	√	√
RSCAN0	Transmit buffer status register 10	RSCAN0TMSTS10	00_H	8	$FFD2\ 02DA_H$	2	8	√	√	√	√	√	√	√	√	√
RSCAN0	Transmit buffer status register 11	RSCAN0TMSTS11	00_H	8	$FFD2\ 02DB_H$	2	8	√	√	√	√	√	√	√	√	√
RSCAN0	Transmit buffer status register 12	RSCAN0TMSTS12	00_H	8	$FFD2\ 02DC_H$	2	8	√	√	√	√	√	√	√	√	√
RSCAN0	Transmit buffer status register 13	RSCAN0TMSTS13	00_H	8	$FFD2\ 02DD_H$	2	8	√	√	√	√	√	√	√	√	√
RSCAN0	Transmit buffer status register 14	RSCAN0TMSTS14	00_H	8	$FFD2\ 02DE_H$	2	8	√	√	√	√	√	√	√	√	√
RSCAN0	Transmit buffer status register 15	RSCAN0TMSTS15	00_H	8	$FFD2\ 02DF_H$	2	8	√	√	√	√	√	√	√	√	√
RSCAN0	Transmit buffer status register 16	RSCAN0TMSTS16	00_H	8	$FFD2\ 02E0_H$	2	8	√	√	√	√	√	√	√	√	√
RSCAN0	Transmit buffer status register 17	RSCAN0TMSTS17	00_H	8	$FFD2\ 02E1_H$	2	8	√	√	√	√	√	√	√	√	√
RSCAN0	Transmit buffer status register 18	RSCAN0TMSTS18	00_H	8	$FFD2\ 02E2_H$	2	8	√	√	√	√	√	√	√	√	√
RSCAN0	Transmit buffer status register 19	RSCAN0TMSTS19	00_H	8	$FFD2\ 02E3_H$	2	8	√	√	√	√	√	√	√	√	√
RSCAN0	Transmit buffer status register 20	RSCAN0TMSTS20	00_H	8	$FFD2\ 02E4_H$	2	8	√	√	√	√	√	√	√	√	√
RSCAN0	Transmit buffer status register 21	RSCAN0TMSTS21	00_H	8	$FFD2\ 02E5_H$	2	8	√	√	√	√	√	√	√	√	√
RSCAN0	Transmit buffer status register 22	RSCAN0TMSTS22	00_H	8	$FFD2\ 02E6_H$	2	8	√	√	√	√	√	√	√	√	√
RSCAN0	Transmit buffer status register 23	RSCAN0TMSTS23	00_H	8	$FFD2\ 02E7_H$	2	8	√	√	√	√	√	√	√	√	√
RSCAN0	Transmit buffer status register 24	RSCAN0TMSTS24	00_H	8	$FFD2\ 02E8_H$	2	8	√	√	√	√	√	√	√	√	√
RSCAN0	Transmit buffer status register 25	RSCAN0TMSTS25	00_H	8	$FFD2\ 02E9_H$	2	8	√	√	√	√	√	√	√	√	√
RSCAN0	Transmit buffer status register 26	RSCAN0TMSTS26	00_H	8	$FFD2\ 02EA_H$	2	8	√	√	√	√	√	√	√	√	√
RSCAN0	Transmit buffer status register 27	RSCAN0TMSTS27	00_H	8	$FFD2\ 02EB_H$	2	8	√	√	√	√	√	√	√	√	√
RSCAN0	Transmit buffer status register 28	RSCAN0TMSTS28	00_H	8	$FFD2\ 02EC_H$	2	8	√	√	√	√	√	√	√	√	√
RSCAN0	Transmit buffer status register 29	RSCAN0TMSTS29	00_H	8	$FFD2\ 02ED_H$	2	8	√	√	√	√	√	√	√	√	√
RSCAN0	Transmit buffer status register 30	RSCAN0TMSTS30	00_H	8	$FFD2\ 02EE_H$	2	8	√	√	√	√	√	√	√	√	√
RSCAN0	Transmit buffer status register 31	RSCAN0TMSTS31	00_H	8	$FFD2\ 02EF_H$	2	8	√	√	√	√	√	√	√	√	√
RSCAN0	Transmit buffer status register 32	RSCAN0TMSTS32	00_H	8	$FFD2\ 02F0_H$	2	8	√	√	√	√	√	√	√	√	√
RSCAN0	Transmit buffer status register 33	RSCAN0TMSTS33	00_H	8	$FFD2\ 02F1_H$	2	8	√	√	√	√	√	√	√	√	√
RSCAN0	Transmit buffer status register 34	RSCAN0TMSTS34	00_H	8	$FFD2\ 02F2_H$	2	8	√	√	√	√	√	√	√	√	√
RSCAN0	Transmit buffer status register 35	RSCAN0TMSTS35	00_H	8	$FFD2\ 02F3_H$	2	8	√	√	√	√	√	√	√	√	√
RSCAN0	Transmit buffer status register 36	RSCAN0TMSTS36	00_H	8	$FFD2\ 02F4_H$	2	8	√	√	√	√	√	√	√	√	√
RSCAN0	Transmit buffer status register 37	RSCAN0TMSTS37	00_H	8	$FFD2\ 02F5_H$	2	8	√	√	√	√	√	√	√	√	√
RSCAN0	Transmit buffer status register 38	RSCAN0TMSTS38	00_H	8	$FFD2\ 02F6_H$	2	8	√	√	√	√	√	√	√	√	√
RSCAN0	Transmit buffer status register 39	RSCAN0TMSTS39	00_H	8	$FFD2\ 02F7_H$	2	8	√	√	√	√	√	√	√	√	√
RSCAN0	Transmit buffer status register 40	RSCAN0TMSTS40	00_H	8	$FFD2\ 02F8_H$	2	8	√	√	√	√	√	√	√	√	√
RSCAN0	Transmit buffer status register 41	RSCAN0TMSTS41	00_H	8	$FFD2\ 02F9_H$	2	8	√	√	√	√	√	√	√	√	√
RSCAN0	Transmit buffer status register 42	RSCAN0TMSTS42	00_H	8	$FFD2\ 02FA_H$	2	8	√	√	√	√	√	√	√	√	√
RSCAN0	Transmit buffer status register 43	RSCAN0TMSTS43	00_H	8	$FFD2\ 02FB_H$	2	8	√	√	√	√	√	√	√	√	√
RSCAN0	Transmit buffer status register 44	RSCAN0TMSTS44	00_H	8	$FFD2\ 02FC_H$	2	8	√	√	√	√	√	√	√	√	√
RSCAN0	Transmit buffer status register 45	RSCAN0TMSTS45	00_H	8	$FFD2\ 02FD_H$	2	8	√	√	√	√	√	√	√	√	√
RSCAN0	Transmit buffer status register 46	RSCAN0TMSTS46	00_H	8	$FFD2\ 02FE_H$	2	8	√	√	√	√	√	√	√	√	√
RSCAN0	Transmit buffer status register 47	RSCAN0TMSTS47	00_H	8	$FFD2\ 02FF_H$	2	8	√	√	√	√	√	√	√	√	√

Table A.1 List of Registers (23/124)

Module	Register	Symbol	Value after Reset	Number of Bits	Address	Peripheral IP group	Access Size	Reset Source*1							Access Authority*1	
								POCRES	CVMRES	EXTRES	DBRES	ECMRES	BISTRES	SWRES	SV	UM
RSCAN0	Transmit buffer transmit request status register 0	RSCAN0TMTRSTS0	0000 0000H	32	FFD2 0350H	2	8, 16, 32	√	√	√	√	√	√	√	√	√
RSCAN0	Transmit buffer transmit request status register 1	RSCAN0TMTRSTS1	0000 0000H	32	FFD2 0354H	2	8, 16, 32	√	√	√	√	√	√	√	√	√
RSCAN0	Transmit buffer transmit abort request status register 0	RSCAN0TMTARSTS0	0000 0000H	32	FFD2 0360H	2	8, 16, 32	√	√	√	√	√	√	√	√	√
RSCAN0	Transmit buffer transmit abort request status register 1	RSCAN0TMTARSTS1	0000 0000H	32	FFD2 0364H	2	8, 16, 32	√	√	√	√	√	√	√	√	√
RSCAN0	Transmit buffer transmit complete status register 0	RSCAN0TMTCSTS0	0000 0000H	32	FFD2 0370H	2	8, 16, 32	√	√	√	√	√	√	√	√	√
RSCAN0	Transmit buffer transmit complete status register 1	RSCAN0TMTCSTS1	0000 0000H	32	FFD2 0374H	2	8, 16, 32	√	√	√	√	√	√	√	√	√
RSCAN0	Transmit buffer transmit abort status register 0	RSCAN0TMTASTS0	0000 0000H	32	FFD2 0380H	2	8, 16, 32	√	√	√	√	√	√	√	√	√
RSCAN0	Transmit buffer transmit abort status register 1	RSCAN0TMTASTS1	0000 0000H	32	FFD2 0384H	2	8, 16, 32	√	√	√	√	√	√	√	√	√
RSCAN0	Transmit buffer interrupt enable configuration register 0	RSCAN0TMIEC0	0000 0000H	32	FFD2 0390H	2	8, 16, 32	√	√	√	√	√	√	√	√	√
RSCAN0	Transmit buffer interrupt enable configuration register 1	RSCAN0TMIEC1	0000 0000H	32	FFD2 0394H	2	8, 16, 32	√	√	√	√	√	√	√	√	√
RSCAN0	Transmit queue configuration and control register 0	RSCAN0TXQCC0	0000 0000H	32	FFD2 03A0H	2	8, 16, 32	√	√	√	√	√	√	√	√	√
RSCAN0	Transmit queue configuration and control register 1	RSCAN0TXQCC1	0000 0000H	32	FFD2 03A4H	2	8, 16, 32	√	√	√	√	√	√	√	√	√
RSCAN0	Transmit queue configuration and control register 2	RSCAN0TXQCC2	0000 0000H	32	FFD2 03A8H	2	8, 16, 32	√	√	√	√	√	√	√	√	√
RSCAN0	Transmit queue status register 0	RSCAN0TXQSTS0	0000 0001H	32	FFD2 03C0H	2	8, 16, 32	√	√	√	√	√	√	√	√	√
RSCAN0	Transmit queue status register 1	RSCAN0TXQSTS1	0000 0001H	32	FFD2 03C4H	2	8, 16, 32	√	√	√	√	√	√	√	√	√
RSCAN0	Transmit queue status register 2	RSCAN0TXQSTS2	0000 0001H	32	FFD2 03C8H	2	8, 16, 32	√	√	√	√	√	√	√	√	√
RSCAN0	Transmit queue pointer control register 0	RSCAN0TXQPCTR0	0000 0000H	32	FFD2 03E0H	2	8, 16, 32	√	√	√	√	√	√	√	√	√
RSCAN0	Transmit queue pointer control register 1	RSCAN0TXQPCTR1	0000 0000H	32	FFD2 03E4H	2	8, 16, 32	√	√	√	√	√	√	√	√	√
RSCAN0	Transmit queue pointer control register 2	RSCAN0TXQPCTR2	0000 0000H	32	FFD2 03E8H	2	8, 16, 32	√	√	√	√	√	√	√	√	√
RSCAN0	Transmit history configuration and control register 0	RSCAN0THLCC0	0000 0000H	32	FFD2 0400H	2	8, 16, 32	√	√	√	√	√	√	√	√	√
RSCAN0	Transmit history configuration and control register 1	RSCAN0THLCC1	0000 0000H	32	FFD2 0404H	2	8, 16, 32	√	√	√	√	√	√	√	√	√
RSCAN0	Transmit history configuration and control register 2	RSCAN0THLCC2	0000 0000H	32	FFD2 0408H	2	8, 16, 32	√	√	√	√	√	√	√	√	√
RSCAN0	Transmit history status register 0	RSCAN0THLSTS0	0000 0001H	32	FFD2 0420H	2	8, 16, 32	√	√	√	√	√	√	√	√	√
RSCAN0	Transmit history status register 1	RSCAN0THLSTS1	0000 0001H	32	FFD2 0424H	2	8, 16, 32	√	√	√	√	√	√	√	√	√
RSCAN0	Transmit history status register 2	RSCAN0THLSTS2	0000 0001H	32	FFD2 0428H	2	8, 16, 32	√	√	√	√	√	√	√	√	√
RSCAN0	Transmit history pointer control register 0	RSCAN0THLPCTR0	0000 0000H	32	FFD2 0440H	2	8, 16, 32	√	√	√	√	√	√	√	√	√
RSCAN0	Transmit history pointer control register 1	RSCAN0THLPCTR1	0000 0000H	32	FFD2 0444H	2	8, 16, 32	√	√	√	√	√	√	√	√	√
RSCAN0	Transmit history pointer control register 2	RSCAN0THLPCTR2	0000 0000H	32	FFD2 0448H	2	8, 16, 32	√	√	√	√	√	√	√	√	√
RSCAN0	Global TX interrupt status register 0	RSCAN0GTINTSTS0	0000 0000H	32	FFD2 0460H	2	8, 16, 32	√	√	√	√	√	√	√	√	√
RSCAN0	Global test configuration register	RSCAN0GTSTCFG	0000 0000H	32	FFD2 0468H	2	8, 16, 32	√	√	√	√	√	√	√	√	√
RSCAN0	Global test control register	RSCAN0GTSTCTR	0000 0000H	32	FFD2 046CH	2	8, 16, 32	√	√	√	√	√	√	√	√	√
RSCAN0	Global lock key register	RSCAN0GLOCKK	0000 0000H	32	FFD2 047CH	2	16, 32	√	√	√	√	√	√	√	√	√
RSCAN0	Receive rule ID register 0	RSCAN0GAFLID0	0000 0000H	32	FFD2 0500H	2	8, 16, 32	√	√	√	√	√	√	√	√	√
RSCAN0	Receive rule mask register 0	RSCAN0GAFLM0	0000 0000H	32	FFD2 0504H	2	8, 16, 32	√	√	√	√	√	√	√	√	√
RSCAN0	Receive rule pointer 0 register 0	RSCAN0GAFLP00	0000 0000H	32	FFD2 0508H	2	8, 16, 32	√	√	√	√	√	√	√	√	√
RSCAN0	Receive rule pointer 1 register 0	RSCAN0GAFLP10	0000 0000H	32	FFD2 050CH	2	8, 16, 32	√	√	√	√	√	√	√	√	√
RSCAN0	Receive rule ID register 1	RSCAN0GAFLID1	0000 0000H	32	FFD2 0510H	2	8, 16, 32	√	√	√	√	√	√	√	√	√
RSCAN0	Receive rule mask register 1	RSCAN0GAFLM1	0000 0000H	32	FFD2 0514H	2	8, 16, 32	√	√	√	√	√	√	√	√	√
RSCAN0	Receive rule pointer 0 register 1	RSCAN0GAFLP01	0000 0000H	32	FFD2 0518H	2	8, 16, 32	√	√	√	√	√	√	√	√	√
RSCAN0	Receive rule pointer 1 register 1	RSCAN0GAFLP11	0000 0000H	32	FFD2 051CH	2	8, 16, 32	√	√	√	√	√	√	√	√	√
RSCAN0	Receive rule ID register 2	RSCAN0GAFLID2	0000 0000H	32	FFD2 0520H	2	8, 16, 32	√	√	√	√	√	√	√	√	√
RSCAN0	Receive rule mask register 2	RSCAN0GAFLM2	0000 0000H	32	FFD2 0524H	2	8, 16, 32	√	√	√	√	√	√	√	√	√
RSCAN0	Receive rule pointer 0 register 2	RSCAN0GAFLP02	0000 0000H	32	FFD2 0528H	2	8, 16, 32	√	√	√	√	√	√	√	√	√
RSCAN0	Receive rule pointer 1 register 2	RSCAN0GAFLP12	0000 0000H	32	FFD2 052CH	2	8, 16, 32	√	√	√	√	√	√	√	√	√
RSCAN0	Receive rule ID register 3	RSCAN0GAFLID3	0000 0000H	32	FFD2 0530H	2	8, 16, 32	√	√	√	√	√	√	√	√	√
RSCAN0	Receive rule mask register 3	RSCAN0GAFLM3	0000 0000H	32	FFD2 0534H	2	8, 16, 32	√	√	√	√	√	√	√	√	√
RSCAN0	Receive rule pointer 0 register 3	RSCAN0GAFLP03	0000 0000H	32	FFD2 0538H	2	8, 16, 32	√	√	√	√	√	√	√	√	√
RSCAN0	Receive rule pointer 1 register 3	RSCAN0GAFLP13	0000 0000H	32	FFD2 053CH	2	8, 16, 32	√	√	√	√	√	√	√	√	√
RSCAN0	Receive rule ID register 4	RSCAN0GAFLID4	0000 0000H	32	FFD2 0540H	2	8, 16, 32	√	√	√	√	√	√	√	√	√
RSCAN0	Receive rule mask register 4	RSCAN0GAFLM4	0000 0000H	32	FFD2 0544H	2	8, 16, 32	√	√	√	√	√	√	√	√	√
RSCAN0	Receive rule pointer 0 register 4	RSCAN0GAFLP04	0000 0000H	32	FFD2 0548H	2	8, 16, 32	√	√	√	√	√	√	√	√	√
RSCAN0	Receive rule pointer 1 register 4	RSCAN0GAFLP14	0000 0000H	32	FFD2 054CH	2	8, 16, 32	√	√	√	√	√	√	√	√	√
RSCAN0	Receive rule ID register 5	RSCAN0GAFLID5	0000 0000H	32	FFD2 0550H	2	8, 16, 32	√	√	√	√	√	√	√	√	√

Table A.1 List of Registers (24/124)

Module	Register	Symbol	Value after Reset	Number of Bits	Address	Peripheral IP group	Access Size	Reset Source*1							Access Authority*1	
								POCRES	CVMRES	EXTRES	DBRES	ECMRES	BISTRES	SWRES	SV	UM
RSCAN0	Receive rule mask register 5	RSCAN0GAFLM5	$0000\ 0000_H$	32	$FFD2\ 0554_H$	2	8, 16, 32	√	√	√	√	√	√	√	√	√
RSCAN0	Receive rule pointer 0 register 5	RSCAN0GAFLP05	$0000\ 0000_H$	32	$FFD2\ 0558_H$	2	8, 16, 32	√	√	√	√	√	√	√	√	√
RSCAN0	Receive rule pointer 1 register 5	RSCAN0GAFLP15	$0000\ 0000_H$	32	$FFD2\ 055C_H$	2	8, 16, 32	√	√	√	√	√	√	√	√	√
RSCAN0	Receive rule ID register 6	RSCAN0GAFLID6	$0000\ 0000_H$	32	$FFD2\ 0560_H$	2	8, 16, 32	√	√	√	√	√	√	√	√	√
RSCAN0	Receive rule mask register 6	RSCAN0GAFLM6	$0000\ 0000_H$	32	$FFD2\ 0564_H$	2	8, 16, 32	√	√	√	√	√	√	√	√	√
RSCAN0	Receive rule pointer 0 register 6	RSCAN0GAFLP06	$0000\ 0000_H$	32	$FFD2\ 0568_H$	2	8, 16, 32	√	√	√	√	√	√	√	√	√
RSCAN0	Receive rule pointer 1 register 6	RSCAN0GAFLP16	$0000\ 0000_H$	32	$FFD2\ 056C_H$	2	8, 16, 32	√	√	√	√	√	√	√	√	√
RSCAN0	Receive rule ID register 7	RSCAN0GAFLID7	$0000\ 0000_H$	32	$FFD2\ 0570_H$	2	8, 16, 32	√	√	√	√	√	√	√	√	√
RSCAN0	Receive rule mask register 7	RSCAN0GAFLM7	$0000\ 0000_H$	32	$FFD2\ 0574_H$	2	8, 16, 32	√	√	√	√	√	√	√	√	√
RSCAN0	Receive rule pointer 0 register 7	RSCAN0GAFLP07	$0000\ 0000_H$	32	$FFD2\ 0578_H$	2	8, 16, 32	√	√	√	√	√	√	√	√	√
RSCAN0	Receive rule pointer 1 register 7	RSCAN0GAFLP17	$0000\ 0000_H$	32	$FFD2\ 057C_H$	2	8, 16, 32	√	√	√	√	√	√	√	√	√
RSCAN0	Receive rule ID register 8	RSCAN0GAFLID8	$0000\ 0000_H$	32	$FFD2\ 0580_H$	2	8, 16, 32	√	√	√	√	√	√	√	√	√
RSCAN0	Receive rule mask register 8	RSCAN0GAFLM8	$0000\ 0000_H$	32	$FFD2\ 0584_H$	2	8, 16, 32	√	√	√	√	√	√	√	√	√
RSCAN0	Receive rule pointer 0 register 8	RSCAN0GAFLP08	$0000\ 0000_H$	32	$FFD2\ 0588_H$	2	8, 16, 32	√	√	√	√	√	√	√	√	√
RSCAN0	Receive rule pointer 1 register 8	RSCAN0GAFLP18	$0000\ 0000_H$	32	$FFD2\ 058C_H$	2	8, 16, 32	√	√	√	√	√	√	√	√	√
RSCAN0	Receive rule ID register 9	RSCAN0GAFLID9	$0000\ 0000_H$	32	$FFD2\ 0590_H$	2	8, 16, 32	√	√	√	√	√	√	√	√	√
RSCAN0	Receive rule mask register 9	RSCAN0GAFLM9	$0000\ 0000_H$	32	$FFD2\ 0594_H$	2	8, 16, 32	√	√	√	√	√	√	√	√	√
RSCAN0	Receive rule pointer 0 register 9	RSCAN0GAFLP09	$0000\ 0000_H$	32	$FFD2\ 0598_H$	2	8, 16, 32	√	√	√	√	√	√	√	√	√
RSCAN0	Receive rule pointer 1 register 9	RSCAN0GAFLP19	$0000\ 0000_H$	32	$FFD2\ 059C_H$	2	8, 16, 32	√	√	√	√	√	√	√	√	√
RSCAN0	Receive rule ID register 10	RSCAN0GAFLID10	$0000\ 0000_H$	32	$FFD2\ 05A0_H$	2	8, 16, 32	√	√	√	√	√	√	√	√	√
RSCAN0	Receive rule mask register 10	RSCAN0GAFLM10	$0000\ 0000_H$	32	$FFD2\ 05A4_H$	2	8, 16, 32	√	√	√	√	√	√	√	√	√
RSCAN0	Receive rule pointer 0 register 10	RSCAN0GAFLP010	$0000\ 0000_H$	32	$FFD2\ 05A8_H$	2	8, 16, 32	√	√	√	√	√	√	√	√	√
RSCAN0	Receive rule pointer 1 register 10	RSCAN0GAFLP110	$0000\ 0000_H$	32	$FFD2\ 05AC_H$	2	8, 16, 32	√	√	√	√	√	√	√	√	√
RSCAN0	Receive rule ID register 11	RSCAN0GAFLID11	$0000\ 0000_H$	32	$FFD2\ 05B0_H$	2	8, 16, 32	√	√	√	√	√	√	√	√	√
RSCAN0	Receive rule mask register 11	RSCAN0GAFLM11	$0000\ 0000_H$	32	$FFD2\ 05B4_H$	2	8, 16, 32	√	√	√	√	√	√	√	√	√
RSCAN0	Receive rule pointer 0 register 11	RSCAN0GAFLP011	$0000\ 0000_H$	32	$FFD2\ 05B8_H$	2	8, 16, 32	√	√	√	√	√	√	√	√	√
RSCAN0	Receive rule pointer 1 register 11	RSCAN0GAFLP111	$0000\ 0000_H$	32	$FFD2\ 05BC_H$	2	8, 16, 32	√	√	√	√	√	√	√	√	√
RSCAN0	Receive rule ID register 12	RSCAN0GAFLID12	$0000\ 0000_H$	32	$FFD2\ 05C0_H$	2	8, 16, 32	√	√	√	√	√	√	√	√	√
RSCAN0	Receive rule mask register 12	RSCAN0GAFLM12	$0000\ 0000_H$	32	$FFD2\ 05C4_H$	2	8, 16, 32	√	√	√	√	√	√	√	√	√
RSCAN0	Receive rule pointer 0 register 12	RSCAN0GAFLP012	$0000\ 0000_H$	32	$FFD2\ 05C8_H$	2	8, 16, 32	√	√	√	√	√	√	√	√	√
RSCAN0	Receive rule pointer 1 register 12	RSCAN0GAFLP112	$0000\ 0000_H$	32	$FFD2\ 05CC_H$	2	8, 16, 32	√	√	√	√	√	√	√	√	√
RSCAN0	Receive rule ID register 13	RSCAN0GAFLID13	$0000\ 0000_H$	32	$FFD2\ 05D0_H$	2	8, 16, 32	√	√	√	√	√	√	√	√	√
RSCAN0	Receive rule mask register 13	RSCAN0GAFLM13	$0000\ 0000_H$	32	$FFD2\ 05D4_H$	2	8, 16, 32	√	√	√	√	√	√	√	√	√
RSCAN0	Receive rule pointer 0 register 13	RSCAN0GAFLP013	$0000\ 0000_H$	32	$FFD2\ 05D8_H$	2	8, 16, 32	√	√	√	√	√	√	√	√	√
RSCAN0	Receive rule pointer 1 register 13	RSCAN0GAFLP113	$0000\ 0000_H$	32	$FFD2\ 05DC_H$	2	8, 16, 32	√	√	√	√	√	√	√	√	√
RSCAN0	Receive rule ID register 14	RSCAN0GAFLID14	$0000\ 0000_H$	32	$FFD2\ 05E0_H$	2	8, 16, 32	√	√	√	√	√	√	√	√	√
RSCAN0	Receive rule mask register 14	RSCAN0GAFLM14	$0000\ 0000_H$	32	$FFD2\ 05E4_H$	2	8, 16, 32	√	√	√	√	√	√	√	√	√
RSCAN0	Receive rule pointer 0 register 14	RSCAN0GAFLP014	$0000\ 0000_H$	32	$FFD2\ 05E8_H$	2	8, 16, 32	√	√	√	√	√	√	√	√	√
RSCAN0	Receive rule pointer 1 register 14	RSCAN0GAFLP114	$0000\ 0000_H$	32	$FFD2\ 05EC_H$	2	8, 16, 32	√	√	√	√	√	√	√	√	√
RSCAN0	Receive rule ID register 15	RSCAN0GAFLID15	$0000\ 0000_H$	32	$FFD2\ 05F0_H$	2	8, 16, 32	√	√	√	√	√	√	√	√	√
RSCAN0	Receive rule mask register 15	RSCAN0GAFLM15	$0000\ 0000_H$	32	$FFD2\ 05F4_H$	2	8, 16, 32	√	√	√	√	√	√	√	√	√
RSCAN0	Receive rule pointer 0 register 15	RSCAN0GAFLP015	$0000\ 0000_H$	32	$FFD2\ 05F8_H$	2	8, 16, 32	√	√	√	√	√	√	√	√	√
RSCAN0	Receive rule pointer 1 register 15	RSCAN0GAFLP115	$0000\ 0000_H$	32	$FFD2\ 05FC_H$	2	8, 16, 32	√	√	√	√	√	√	√	√	√
RSCAN0	Receive buffer ID register 0	RSCAN0RMID0	$0000\ 0000_H$	32	$FFD2\ 0600_H$	2	8, 16, 32	√	√	√	√	√	√	√	√	√
RSCAN0	Receive buffer pointer register 0	RSCAN0RMPTR0	$0000\ 0000_H$	32	$FFD2\ 0604_H$	2	8, 16, 32	√	√	√	√	√	√	√	√	√
RSCAN0	Receive buffer data field 0 register 0	RSCAN0RMDF00	$0000\ 0000_H$	32	$FFD2\ 0608_H$	2	8, 16, 32	√	√	√	√	√	√	√	√	√
RSCAN0	Receive buffer data field 1 register 0	RSCAN0RMDF10	$0000\ 0000_H$	32	$FFD2\ 060C_H$	2	8, 16, 32	√	√	√	√	√	√	√	√	√
RSCAN0	Receive buffer ID register 1	RSCAN0RMID1	$0000\ 0000_H$	32	$FFD2\ 0610_H$	2	8, 16, 32	√	√	√	√	√	√	√	√	√
RSCAN0	Receive buffer pointer register 1	RSCAN0RMPTR1	$0000\ 0000_H$	32	$FFD2\ 0614_H$	2	8, 16, 32	√	√	√	√	√	√	√	√	√
RSCAN0	Receive buffer data field 0 register 1	RSCAN0RMDF01	$0000\ 0000_H$	32	$FFD2\ 0618_H$	2	8, 16, 32	√	√	√	√	√	√	√	√	√
RSCAN0	Receive buffer data field 1 register 1	RSCAN0RMDF11	$0000\ 0000_H$	32	$FFD2\ 061C_H$	2	8, 16, 32	√	√	√	√	√	√	√	√	√
RSCAN0	Receive buffer ID register 2	RSCAN0RMID2	$0000\ 0000_H$	32	$FFD2\ 0620_H$	2	8, 16, 32	√	√	√	√	√	√	√	√	√
RSCAN0	Receive buffer pointer register 2	RSCAN0RMPTR2	$0000\ 0000_H$	32	$FFD2\ 0624_H$	2	8, 16, 32	√	√	√	√	√	√	√	√	√

Table A.1 List of Registers (25/124)

Module	Register	Symbol	Value after Reset	Number of Bits	Address	Peripheral IP group	Access Size	Reset Source*1							Access Authority*1	
								POCRES	CVMRES	EXTRES	DBRES	ECMRES	BISTRES	SWRES	SV	UM
RSCAN0	Receive buffer data field 0 register 2	RSCAN0RMDF02	0000 0000$_H$	32	FFD2 0628$_H$	2	8, 16, 32	√	√	√	√	√	√	√	√	√
RSCAN0	Receive buffer data field 1 register 2	RSCAN0RMDF12	0000 0000$_H$	32	FFD2 062C$_H$	2	8, 16, 32	√	√	√	√	√	√	√	√	√
RSCAN0	Receive buffer ID register 3	RSCAN0RMID3	0000 0000$_H$	32	FFD2 0630$_H$	2	8, 16, 32	√	√	√	√	√	√	√	√	√
RSCAN0	Receive buffer pointer register 3	RSCAN0RMPTR3	0000 0000$_H$	32	FFD2 0634$_H$	2	8, 16, 32	√	√	√	√	√	√	√	√	√
RSCAN0	Receive buffer data field 0 register 3	RSCAN0RMDF03	0000 0000$_H$	32	FFD2 0638$_H$	2	8, 16, 32	√	√	√	√	√	√	√	√	√
RSCAN0	Receive buffer data field 1 register 3	RSCAN0RMDF13	0000 0000$_H$	32	FFD2 063C$_H$	2	8, 16, 32	√	√	√	√	√	√	√	√	√
RSCAN0	Receive buffer ID register 4	RSCAN0RMID4	0000 0000$_H$	32	FFD2 0640$_H$	2	8, 16, 32	√	√	√	√	√	√	√	√	√
RSCAN0	Receive buffer pointer register 4	RSCAN0RMPTR4	0000 0000$_H$	32	FFD2 0644$_H$	2	8, 16, 32	√	√	√	√	√	√	√	√	√
RSCAN0	Receive buffer data field 0 register 4	RSCAN0RMDF04	0000 0000$_H$	32	FFD2 0648$_H$	2	8, 16, 32	√	√	√	√	√	√	√	√	√
RSCAN0	Receive buffer data field 1 register 4	RSCAN0RMDF14	0000 0000$_H$	32	FFD2 064C$_H$	2	8, 16, 32	√	√	√	√	√	√	√	√	√
RSCAN0	Receive buffer ID register 5	RSCAN0RMID5	0000 0000$_H$	32	FFD2 0650$_H$	2	8, 16, 32	√	√	√	√	√	√	√	√	√
RSCAN0	Receive buffer pointer register 5	RSCAN0RMPTR5	0000 0000$_H$	32	FFD2 0654$_H$	2	8, 16, 32	√	√	√	√	√	√	√	√	√
RSCAN0	Receive buffer data field 0 register 5	RSCAN0RMDF05	0000 0000$_H$	32	FFD2 0658$_H$	2	8, 16, 32	√	√	√	√	√	√	√	√	√
RSCAN0	Receive buffer data field 1 register 5	RSCAN0RMDF15	0000 0000$_H$	32	FFD2 065C$_H$	2	8, 16, 32	√	√	√	√	√	√	√	√	√
RSCAN0	Receive buffer ID register 6	RSCAN0RMID6	0000 0000$_H$	32	FFD2 0660$_H$	2	8, 16, 32	√	√	√	√	√	√	√	√	√
RSCAN0	Receive buffer pointer register 6	RSCAN0RMPTR6	0000 0000$_H$	32	FFD2 0664$_H$	2	8, 16, 32	√	√	√	√	√	√	√	√	√
RSCAN0	Receive buffer data field 0 register 6	RSCAN0RMDF06	0000 0000$_H$	32	FFD2 0668$_H$	2	8, 16, 32	√	√	√	√	√	√	√	√	√
RSCAN0	Receive buffer data field 1 register 6	RSCAN0RMDF16	0000 0000$_H$	32	FFD2 066C$_H$	2	8, 16, 32	√	√	√	√	√	√	√	√	√
RSCAN0	Receive buffer ID register 7	RSCAN0RMID7	0000 0000$_H$	32	FFD2 0670$_H$	2	8, 16, 32	√	√	√	√	√	√	√	√	√
RSCAN0	Receive buffer pointer register 7	RSCAN0RMPTR7	0000 0000$_H$	32	FFD2 0674$_H$	2	8, 16, 32	√	√	√	√	√	√	√	√	√
RSCAN0	Receive buffer data field 0 register 7	RSCAN0RMDF07	0000 0000$_H$	32	FFD2 0678$_H$	2	8, 16, 32	√	√	√	√	√	√	√	√	√
RSCAN0	Receive buffer data field 1 register 7	RSCAN0RMDF17	0000 0000$_H$	32	FFD2 067C$_H$	2	8, 16, 32	√	√	√	√	√	√	√	√	√
RSCAN0	Receive buffer ID register 8	RSCAN0RMID8	0000 0000$_H$	32	FFD2 0680$_H$	2	8, 16, 32	√	√	√	√	√	√	√	√	√
RSCAN0	Receive buffer pointer register 8	RSCAN0RMPTR8	0000 0000$_H$	32	FFD2 0684$_H$	2	8, 16, 32	√	√	√	√	√	√	√	√	√
RSCAN0	Receive buffer data field 0 register 8	RSCAN0RMDF08	0000 0000$_H$	32	FFD2 0688$_H$	2	8, 16, 32	√	√	√	√	√	√	√	√	√
RSCAN0	Receive buffer data field 1 register 8	RSCAN0RMDF18	0000 0000$_H$	32	FFD2 068C$_H$	2	8, 16, 32	√	√	√	√	√	√	√	√	√
RSCAN0	Receive buffer ID register 9	RSCAN0RMID9	0000 0000$_H$	32	FFD2 0690$_H$	2	8, 16, 32	√	√	√	√	√	√	√	√	√
RSCAN0	Receive buffer pointer register 9	RSCAN0RMPTR9	0000 0000$_H$	32	FFD2 0694$_H$	2	8, 16, 32	√	√	√	√	√	√	√	√	√
RSCAN0	Receive buffer data field 0 register 9	RSCAN0RMDF09	0000 0000$_H$	32	FFD2 0698$_H$	2	8, 16, 32	√	√	√	√	√	√	√	√	√
RSCAN0	Receive buffer data field 1 register 9	RSCAN0RMDF19	0000 0000$_H$	32	FFD2 069C$_H$	2	8, 16, 32	√	√	√	√	√	√	√	√	√
RSCAN0	Receive buffer ID register 10	RSCAN0RMID10	0000 0000$_H$	32	FFD2 06A0$_H$	2	8, 16, 32	√	√	√	√	√	√	√	√	√
RSCAN0	Receive buffer pointer register 10	RSCAN0RMPTR10	0000 0000$_H$	32	FFD2 06A4$_H$	2	8, 16, 32	√	√	√	√	√	√	√	√	√
RSCAN0	Receive buffer data field 0 register 10	RSCAN0RMDF010	0000 0000$_H$	32	FFD2 06A8$_H$	2	8, 16, 32	√	√	√	√	√	√	√	√	√
RSCAN0	Receive buffer data field 1 register 10	RSCAN0RMDF110	0000 0000$_H$	32	FFD2 06AC$_H$	2	8, 16, 32	√	√	√	√	√	√	√	√	√
RSCAN0	Receive buffer ID register 11	RSCAN0RMID11	0000 0000$_H$	32	FFD2 06B0$_H$	2	8, 16, 32	√	√	√	√	√	√	√	√	√
RSCAN0	Receive buffer pointer register 11	RSCAN0RMPTR11	0000 0000$_H$	32	FFD2 06B4$_H$	2	8, 16, 32	√	√	√	√	√	√	√	√	√
RSCAN0	Receive buffer data field 0 register 11	RSCAN0RMDF011	0000 0000$_H$	32	FFD2 06B8$_H$	2	8, 16, 32	√	√	√	√	√	√	√	√	√
RSCAN0	Receive buffer data field 1 register 11	RSCAN0RMDF111	0000 0000$_H$	32	FFD2 06BC$_H$	2	8, 16, 32	√	√	√	√	√	√	√	√	√
RSCAN0	Receive buffer ID register 12	RSCAN0RMID12	0000 0000$_H$	32	FFD2 06C0$_H$	2	8, 16, 32	√	√	√	√	√	√	√	√	√
RSCAN0	Receive buffer pointer register 12	RSCAN0RMPTR12	0000 0000$_H$	32	FFD2 06C4$_H$	2	8, 16, 32	√	√	√	√	√	√	√	√	√
RSCAN0	Receive buffer data field 0 register 12	RSCAN0RMDF012	0000 0000$_H$	32	FFD2 06C8$_H$	2	8, 16, 32	√	√	√	√	√	√	√	√	√
RSCAN0	Receive buffer data field 1 register 12	RSCAN0RMDF112	0000 0000$_H$	32	FFD2 06CC$_H$	2	8, 16, 32	√	√	√	√	√	√	√	√	√
RSCAN0	Receive buffer ID register 13	RSCAN0RMID13	0000 0000$_H$	32	FFD2 06D0$_H$	2	8, 16, 32	√	√	√	√	√	√	√	√	√
RSCAN0	Receive buffer pointer register 13	RSCAN0RMPTR13	0000 0000$_H$	32	FFD2 06D4$_H$	2	8, 16, 32	√	√	√	√	√	√	√	√	√
RSCAN0	Receive buffer data field 0 register 13	RSCAN0RMDF013	0000 0000$_H$	32	FFD2 06D8$_H$	2	8, 16, 32	√	√	√	√	√	√	√	√	√
RSCAN0	Receive buffer data field 1 register 13	RSCAN0RMDF113	0000 0000$_H$	32	FFD2 06DC$_H$	2	8, 16, 32	√	√	√	√	√	√	√	√	√
RSCAN0	Receive buffer ID register 14	RSCAN0RMID14	0000 0000$_H$	32	FFD2 06E0$_H$	2	8, 16, 32	√	√	√	√	√	√	√	√	√
RSCAN0	Receive buffer pointer register 14	RSCAN0RMPTR14	0000 0000$_H$	32	FFD2 06E4$_H$	2	8, 16, 32	√	√	√	√	√	√	√	√	√
RSCAN0	Receive buffer data field 0 register 14	RSCAN0RMDF014	0000 0000$_H$	32	FFD2 06E8$_H$	2	8, 16, 32	√	√	√	√	√	√	√	√	√
RSCAN0	Receive buffer data field 1 register 14	RSCAN0RMDF114	0000 0000$_H$	32	FFD2 06EC$_H$	2	8, 16, 32	√	√	√	√	√	√	√	√	√
RSCAN0	Receive buffer ID register 15	RSCAN0RMID15	0000 0000$_H$	32	FFD2 06F0$_H$	2	8, 16, 32	√	√	√	√	√	√	√	√	√
RSCAN0	Receive buffer pointer register 15	RSCAN0RMPTR15	0000 0000$_H$	32	FFD2 06F4$_H$	2	8, 16, 32	√	√	√	√	√	√	√	√	√
RSCAN0	Receive buffer data field 0 register 15	RSCAN0RMDF015	0000 0000$_H$	32	FFD2 06F8$_H$	2	8, 16, 32	√	√	√	√	√	√	√	√	√

Table A.1 List of Registers (26/124)

Module	Register	Symbol	Value after Reset	Number of Bits	Address	Peripheral IP group	Access Size	Reset Source*1							Access Authority*1	
								POCRES	CVMRES	EXTRES	DBRES	ECMRES	BISTRES	SWRES	SV	UM
RSCAN0	Receive buffer data field 1 register 15	RSCAN0RMDF115	0000 0000H	32	FFD2 06FCH	2	8, 16, 32	√	√	√	√	√	√	√	√	√
RSCAN0	Receive buffer ID register 16	RSCAN0RMID16	0000 0000H	32	FFD2 0700H	2	8, 16, 32	√	√	√	√	√	√	√	√	√
RSCAN0	Receive buffer pointer register 16	RSCAN0RMPTR16	0000 0000H	32	FFD2 0704H	2	8, 16, 32	√	√	√	√	√	√	√	√	√
RSCAN0	Receive buffer data field 0 register 16	RSCAN0RMDF016	0000 0000H	32	FFD2 0708H	2	8, 16, 32	√	√	√	√	√	√	√	√	√
RSCAN0	Receive buffer data field 1 register 16	RSCAN0RMDF116	0000 0000H	32	FFD2 070CH	2	8, 16, 32	√	√	√	√	√	√	√	√	√
RSCAN0	Receive buffer ID register 17	RSCAN0RMID17	0000 0000H	32	FFD2 0710H	2	8, 16, 32	√	√	√	√	√	√	√	√	√
RSCAN0	Receive buffer pointer register 17	RSCAN0RMPTR17	0000 0000H	32	FFD2 0714H	2	8, 16, 32	√	√	√	√	√	√	√	√	√
RSCAN0	Receive buffer data field 0 register 17	RSCAN0RMDF017	0000 0000H	32	FFD2 0718H	2	8, 16, 32	√	√	√	√	√	√	√	√	√
RSCAN0	Receive buffer data field 1 register 17	RSCAN0RMDF117	0000 0000H	32	FFD2 071CH	2	8, 16, 32	√	√	√	√	√	√	√	√	√
RSCAN0	Receive buffer ID register 18	RSCAN0RMID18	0000 0000H	32	FFD2 0720H	2	8, 16, 32	√	√	√	√	√	√	√	√	√
RSCAN0	Receive buffer pointer register 18	RSCAN0RMPTR18	0000 0000H	32	FFD2 0724H	2	8, 16, 32	√	√	√	√	√	√	√	√	√
RSCAN0	Receive buffer data field 0 register 18	RSCAN0RMDF018	0000 0000H	32	FFD2 0728H	2	8, 16, 32	√	√	√	√	√	√	√	√	√
RSCAN0	Receive buffer data field 1 register 18	RSCAN0RMDF118	0000 0000H	32	FFD2 072CH	2	8, 16, 32	√	√	√	√	√	√	√	√	√
RSCAN0	Receive buffer ID register 19	RSCAN0RMID19	0000 0000H	32	FFD2 0730H	2	8, 16, 32	√	√	√	√	√	√	√	√	√
RSCAN0	Receive buffer pointer register 19	RSCAN0RMPTR19	0000 0000H	32	FFD2 0734H	2	8, 16, 32	√	√	√	√	√	√	√	√	√
RSCAN0	Receive buffer data field 0 register 19	RSCAN0RMDF019	0000 0000H	32	FFD2 0738H	2	8, 16, 32	√	√	√	√	√	√	√	√	√
RSCAN0	Receive buffer data field 1 register 19	RSCAN0RMDF119	0000 0000H	32	FFD2 073CH	2	8, 16, 32	√	√	√	√	√	√	√	√	√
RSCAN0	Receive buffer ID register 20	RSCAN0RMID20	0000 0000H	32	FFD2 0740H	2	8, 16, 32	√	√	√	√	√	√	√	√	√
RSCAN0	Receive buffer pointer register 20	RSCAN0RMPTR20	0000 0000H	32	FFD2 0744H	2	8, 16, 32	√	√	√	√	√	√	√	√	√
RSCAN0	Receive buffer data field 0 register 20	RSCAN0RMDF020	0000 0000H	32	FFD2 0748H	2	8, 16, 32	√	√	√	√	√	√	√	√	√
RSCAN0	Receive buffer data field 1 register 20	RSCAN0RMDF120	0000 0000H	32	FFD2 074CH	2	8, 16, 32	√	√	√	√	√	√	√	√	√
RSCAN0	Receive buffer ID register 21	RSCAN0RMID21	0000 0000H	32	FFD2 0750H	2	8, 16, 32	√	√	√	√	√	√	√	√	√
RSCAN0	Receive buffer pointer register 21	RSCAN0RMPTR21	0000 0000H	32	FFD2 0754H	2	8, 16, 32	√	√	√	√	√	√	√	√	√
RSCAN0	Receive buffer data field 0 register 21	RSCAN0RMDF021	0000 0000H	32	FFD2 0758H	2	8, 16, 32	√	√	√	√	√	√	√	√	√
RSCAN0	Receive buffer data field 1 register 21	RSCAN0RMDF121	0000 0000H	32	FFD2 075CH	2	8, 16, 32	√	√	√	√	√	√	√	√	√
RSCAN0	Receive buffer ID register 22	RSCAN0RMID22	0000 0000H	32	FFD2 0760H	2	8, 16, 32	√	√	√	√	√	√	√	√	√
RSCAN0	Receive buffer pointer register 22	RSCAN0RMPTR22	0000 0000H	32	FFD2 0764H	2	8, 16, 32	√	√	√	√	√	√	√	√	√
RSCAN0	Receive buffer data field 0 register 22	RSCAN0RMDF022	0000 0000H	32	FFD2 0768H	2	8, 16, 32	√	√	√	√	√	√	√	√	√
RSCAN0	Receive buffer data field 1 register 22	RSCAN0RMDF122	0000 0000H	32	FFD2 076CH	2	8, 16, 32	√	√	√	√	√	√	√	√	√
RSCAN0	Receive buffer ID register 23	RSCAN0RMID23	0000 0000H	32	FFD2 0770H	2	8, 16, 32	√	√	√	√	√	√	√	√	√
RSCAN0	Receive buffer pointer register 23	RSCAN0RMPTR23	0000 0000H	32	FFD2 0774H	2	8, 16, 32	√	√	√	√	√	√	√	√	√
RSCAN0	Receive buffer data field 0 register 23	RSCAN0RMDF023	0000 0000H	32	FFD2 0778H	2	8, 16, 32	√	√	√	√	√	√	√	√	√
RSCAN0	Receive buffer data field 1 register 23	RSCAN0RMDF123	0000 0000H	32	FFD2 077CH	2	8, 16, 32	√	√	√	√	√	√	√	√	√
RSCAN0	Receive buffer ID register 24	RSCAN0RMID24	0000 0000H	32	FFD2 0780H	2	8, 16, 32	√	√	√	√	√	√	√	√	√
RSCAN0	Receive buffer pointer register 24	RSCAN0RMPTR24	0000 0000H	32	FFD2 0784H	2	8, 16, 32	√	√	√	√	√	√	√	√	√
RSCAN0	Receive buffer data field 0 register 24	RSCAN0RMDF024	0000 0000H	32	FFD2 0788H	2	8, 16, 32	√	√	√	√	√	√	√	√	√
RSCAN0	Receive buffer data field 1 register 24	RSCAN0RMDF124	0000 0000H	32	FFD2 078CH	2	8, 16, 32	√	√	√	√	√	√	√	√	√
RSCAN0	Receive buffer ID register 25	RSCAN0RMID25	0000 0000H	32	FFD2 0790H	2	8, 16, 32	√	√	√	√	√	√	√	√	√
RSCAN0	Receive buffer pointer register 25	RSCAN0RMPTR25	0000 0000H	32	FFD2 0794H	2	8, 16, 32	√	√	√	√	√	√	√	√	√
RSCAN0	Receive buffer data field 0 register 25	RSCAN0RMDF025	0000 0000H	32	FFD2 0798H	2	8, 16, 32	√	√	√	√	√	√	√	√	√
RSCAN0	Receive buffer data field 1 register 25	RSCAN0RMDF125	0000 0000H	32	FFD2 079CH	2	8, 16, 32	√	√	√	√	√	√	√	√	√
RSCAN0	Receive buffer ID register 26	RSCAN0RMID26	0000 0000H	32	FFD2 07A0H	2	8, 16, 32	√	√	√	√	√	√	√	√	√
RSCAN0	Receive buffer pointer register 26	RSCAN0RMPTR26	0000 0000H	32	FFD2 07A4H	2	8, 16, 32	√	√	√	√	√	√	√	√	√
RSCAN0	Receive buffer data field 0 register 26	RSCAN0RMDF026	0000 0000H	32	FFD2 07A8H	2	8, 16, 32	√	√	√	√	√	√	√	√	√
RSCAN0	Receive buffer data field 1 register 26	RSCAN0RMDF126	0000 0000H	32	FFD2 07ACH	2	8, 16, 32	√	√	√	√	√	√	√	√	√
RSCAN0	Receive buffer ID register 27	RSCAN0RMID27	0000 0000H	32	FFD2 07B0H	2	8, 16, 32	√	√	√	√	√	√	√	√	√
RSCAN0	Receive buffer pointer register 27	RSCAN0RMPTR27	0000 0000H	32	FFD2 07B4H	2	8, 16, 32	√	√	√	√	√	√	√	√	√
RSCAN0	Receive buffer data field 0 register 27	RSCAN0RMDF027	0000 0000H	32	FFD2 07B8H	2	8, 16, 32	√	√	√	√	√	√	√	√	√
RSCAN0	Receive buffer data field 1 register 27	RSCAN0RMDF127	0000 0000H	32	FFD2 07BCH	2	8, 16, 32	√	√	√	√	√	√	√	√	√
RSCAN0	Receive buffer ID register 28	RSCAN0RMID28	0000 0000H	32	FFD2 07C0H	2	8, 16, 32	√	√	√	√	√	√	√	√	√
RSCAN0	Receive buffer pointer register 28	RSCAN0RMPTR28	0000 0000H	32	FFD2 07C4H	2	8, 16, 32	√	√	√	√	√	√	√	√	√
RSCAN0	Receive buffer data field 0 register 28	RSCAN0RMDF028	0000 0000H	32	FFD2 07C8H	2	8, 16, 32	√	√	√	√	√	√	√	√	√
RSCAN0	Receive buffer data field 1 register 28	RSCAN0RMDF128	0000 0000H	32	FFD2 07CCH	2	8, 16, 32	√	√	√	√	√	√	√	√	√

Table A.1 List of Registers (27/124)

Module	Register	Symbol	Value after Reset	Number of Bits	Address	Peripheral IP group	Access Size	Reset Source*1							Access Authority*1	
								POCRES	CVMRES	EXTRES	DBRES	ECMRES	BISTRES	SWRES	SV	UM
RSCAN0	Receive buffer ID register 29	RSCAN0RMID29	0000 0000$_H$	32	FFD2 07D0$_H$	2	8, 16, 32	√	√	√	√	√	√	√	√	√
RSCAN0	Receive buffer pointer register 29	RSCAN0RMPTR29	0000 0000$_H$	32	FFD2 07D4$_H$	2	8, 16, 32	√	√	√	√	√	√	√	√	√
RSCAN0	Receive buffer data field 0 register 29	RSCAN0RMDF029	0000 0000$_H$	32	FFD2 07D8$_H$	2	8, 16, 32	√	√	√	√	√	√	√	√	√
RSCAN0	Receive buffer data field 1 register 29	RSCAN0RMDF129	0000 0000$_H$	32	FFD2 07DC$_H$	2	8, 16, 32	√	√	√	√	√	√	√	√	√
RSCAN0	Receive buffer ID register 30	RSCAN0RMID30	0000 0000$_H$	32	FFD2 07E0$_H$	2	8, 16, 32	√	√	√	√	√	√	√	√	√
RSCAN0	Receive buffer pointer register 30	RSCAN0RMPTR30	0000 0000$_H$	32	FFD2 07E4$_H$	2	8, 16, 32	√	√	√	√	√	√	√	√	√
RSCAN0	Receive buffer data field 0 register 30	RSCAN0RMDF030	0000 0000$_H$	32	FFD2 07E8$_H$	2	8, 16, 32	√	√	√	√	√	√	√	√	√
RSCAN0	Receive buffer data field 1 register 30	RSCAN0RMDF130	0000 0000$_H$	32	FFD2 07EC$_H$	2	8, 16, 32	√	√	√	√	√	√	√	√	√
RSCAN0	Receive buffer ID register 31	RSCAN0RMID31	0000 0000$_H$	32	FFD2 07F0$_H$	2	8, 16, 32	√	√	√	√	√	√	√	√	√
RSCAN0	Receive buffer pointer register 31	RSCAN0RMPTR31	0000 0000$_H$	32	FFD2 07F4$_H$	2	8, 16, 32	√	√	√	√	√	√	√	√	√
RSCAN0	Receive buffer data field 0 register 31	RSCAN0RMDF031	0000 0000$_H$	32	FFD2 07F8$_H$	2	8, 16, 32	√	√	√	√	√	√	√	√	√
RSCAN0	Receive buffer data field 1 register 31	RSCAN0RMDF131	0000 0000$_H$	32	FFD2 07FC$_H$	2	8, 16, 32	√	√	√	√	√	√	√	√	√
RSCAN0	Receive buffer ID register 32	RSCAN0RMID32	0000 0000$_H$	32	FFD2 0800$_H$	2	8, 16, 32	√	√	√	√	√	√	√	√	√
RSCAN0	Receive buffer pointer register 32	RSCAN0RMPTR32	0000 0000$_H$	32	FFD2 0804$_H$	2	8, 16, 32	√	√	√	√	√	√	√	√	√
RSCAN0	Receive buffer data field 0 register 32	RSCAN0RMDF032	0000 0000$_H$	32	FFD2 0808$_H$	2	8, 16, 32	√	√	√	√	√	√	√	√	√
RSCAN0	Receive buffer data field 1 register 32	RSCAN0RMDF132	0000 0000$_H$	32	FFD2 080C$_H$	2	8, 16, 32	√	√	√	√	√	√	√	√	√
RSCAN0	Receive buffer ID register 33	RSCAN0RMID33	0000 0000$_H$	32	FFD2 0810$_H$	2	8, 16, 32	√	√	√	√	√	√	√	√	√
RSCAN0	Receive buffer pointer register 33	RSCAN0RMPTR33	0000 0000$_H$	32	FFD2 0814$_H$	2	8, 16, 32	√	√	√	√	√	√	√	√	√
RSCAN0	Receive buffer data field 0 register 33	RSCAN0RMDF033	0000 0000$_H$	32	FFD2 0818$_H$	2	8, 16, 32	√	√	√	√	√	√	√	√	√
RSCAN0	Receive buffer data field 1 register 33	RSCAN0RMDF133	0000 0000$_H$	32	FFD2 081C$_H$	2	8, 16, 32	√	√	√	√	√	√	√	√	√
RSCAN0	Receive buffer ID register 34	RSCAN0RMID34	0000 0000$_H$	32	FFD2 0820$_H$	2	8, 16, 32	√	√	√	√	√	√	√	√	√
RSCAN0	Receive buffer pointer register 34	RSCAN0RMPTR34	0000 0000$_H$	32	FFD2 0824$_H$	2	8, 16, 32	√	√	√	√	√	√	√	√	√
RSCAN0	Receive buffer data field 0 register 34	RSCAN0RMDF034	0000 0000$_H$	32	FFD2 0828$_H$	2	8, 16, 32	√	√	√	√	√	√	√	√	√
RSCAN0	Receive buffer data field 1 register 34	RSCAN0RMDF134	0000 0000$_H$	32	FFD2 082C$_H$	2	8, 16, 32	√	√	√	√	√	√	√	√	√
RSCAN0	Receive buffer ID register 35	RSCAN0RMID35	0000 0000$_H$	32	FFD2 0830$_H$	2	8, 16, 32	√	√	√	√	√	√	√	√	√
RSCAN0	Receive buffer pointer register 35	RSCAN0RMPTR35	0000 0000$_H$	32	FFD2 0834$_H$	2	8, 16, 32	√	√	√	√	√	√	√	√	√
RSCAN0	Receive buffer data field 0 register 35	RSCAN0RMDF035	0000 0000$_H$	32	FFD2 0838$_H$	2	8, 16, 32	√	√	√	√	√	√	√	√	√
RSCAN0	Receive buffer data field 1 register 35	RSCAN0RMDF135	0000 0000$_H$	32	FFD2 083C$_H$	2	8, 16, 32	√	√	√	√	√	√	√	√	√
RSCAN0	Receive buffer ID register 36	RSCAN0RMID36	0000 0000$_H$	32	FFD2 0840$_H$	2	8, 16, 32	√	√	√	√	√	√	√	√	√
RSCAN0	Receive buffer pointer register 36	RSCAN0RMPTR36	0000 0000$_H$	32	FFD2 0844$_H$	2	8, 16, 32	√	√	√	√	√	√	√	√	√
RSCAN0	Receive buffer data field 0 register 36	RSCAN0RMDF036	0000 0000$_H$	32	FFD2 0848$_H$	2	8, 16, 32	√	√	√	√	√	√	√	√	√
RSCAN0	Receive buffer data field 1 register 36	RSCAN0RMDF136	0000 0000$_H$	32	FFD2 084C$_H$	2	8, 16, 32	√	√	√	√	√	√	√	√	√
RSCAN0	Receive buffer ID register 37	RSCAN0RMID37	0000 0000$_H$	32	FFD2 0850$_H$	2	8, 16, 32	√	√	√	√	√	√	√	√	√
RSCAN0	Receive buffer pointer register 37	RSCAN0RMPTR37	0000 0000$_H$	32	FFD2 0854$_H$	2	8, 16, 32	√	√	√	√	√	√	√	√	√
RSCAN0	Receive buffer data field 0 register 37	RSCAN0RMDF037	0000 0000$_H$	32	FFD2 0858$_H$	2	8, 16, 32	√	√	√	√	√	√	√	√	√
RSCAN0	Receive buffer data field 1 register 37	RSCAN0RMDF137	0000 0000$_H$	32	FFD2 085C$_H$	2	8, 16, 32	√	√	√	√	√	√	√	√	√
RSCAN0	Receive buffer ID register 38	RSCAN0RMID38	0000 0000$_H$	32	FFD2 0860$_H$	2	8, 16, 32	√	√	√	√	√	√	√	√	√
RSCAN0	Receive buffer pointer register 38	RSCAN0RMPTR38	0000 0000$_H$	32	FFD2 0864$_H$	2	8, 16, 32	√	√	√	√	√	√	√	√	√
RSCAN0	Receive buffer data field 0 register 38	RSCAN0RMDF038	0000 0000$_H$	32	FFD2 0868$_H$	2	8, 16, 32	√	√	√	√	√	√	√	√	√
RSCAN0	Receive buffer data field 1 register 38	RSCAN0RMDF138	0000 0000$_H$	32	FFD2 086C$_H$	2	8, 16, 32	√	√	√	√	√	√	√	√	√
RSCAN0	Receive buffer ID register 39	RSCAN0RMID39	0000 0000$_H$	32	FFD2 0870$_H$	2	8, 16, 32	√	√	√	√	√	√	√	√	√
RSCAN0	Receive buffer pointer register 39	RSCAN0RMPTR39	0000 0000$_H$	32	FFD2 0874$_H$	2	8, 16, 32	√	√	√	√	√	√	√	√	√
RSCAN0	Receive buffer data field 0 register 39	RSCAN0RMDF039	0000 0000$_H$	32	FFD2 0878$_H$	2	8, 16, 32	√	√	√	√	√	√	√	√	√
RSCAN0	Receive buffer data field 1 register 39	RSCAN0RMDF139	0000 0000$_H$	32	FFD2 087C$_H$	2	8, 16, 32	√	√	√	√	√	√	√	√	√
RSCAN0	Receive buffer ID register 40	RSCAN0RMID40	0000 0000$_H$	32	FFD2 0880$_H$	2	8, 16, 32	√	√	√	√	√	√	√	√	√
RSCAN0	Receive buffer pointer register 40	RSCAN0RMPTR40	0000 0000$_H$	32	FFD2 0884$_H$	2	8, 16, 32	√	√	√	√	√	√	√	√	√
RSCAN0	Receive buffer data field 0 register 40	RSCAN0RMDF040	0000 0000$_H$	32	FFD2 0888$_H$	2	8, 16, 32	√	√	√	√	√	√	√	√	√
RSCAN0	Receive buffer data field 1 register 40	RSCAN0RMDF140	0000 0000$_H$	32	FFD2 088C$_H$	2	8, 16, 32	√	√	√	√	√	√	√	√	√
RSCAN0	Receive buffer ID register 41	RSCAN0RMID41	0000 0000$_H$	32	FFD2 0890$_H$	2	8, 16, 32	√	√	√	√	√	√	√	√	√
RSCAN0	Receive buffer pointer register 41	RSCAN0RMPTR41	0000 0000$_H$	32	FFD2 0894$_H$	2	8, 16, 32	√	√	√	√	√	√	√	√	√
RSCAN0	Receive buffer data field 0 register 41	RSCAN0RMDF041	0000 0000$_H$	32	FFD2 0898$_H$	2	8, 16, 32	√	√	√	√	√	√	√	√	√
RSCAN0	Receive buffer data field 1 register 41	RSCAN0RMDF141	0000 0000$_H$	32	FFD2 089C$_H$	2	8, 16, 32	√	√	√	√	√	√	√	√	√
RSCAN0	Receive buffer ID register 42	RSCAN0RMID42	0000 0000$_H$	32	FFD2 08A0$_H$	2	8, 16, 32	√	√	√	√	√	√	√	√	√

Table A.1 List of Registers (28/124)

Module	Register	Symbol	Value after Reset	Number of Bits	Address	Peripheral IP group	Access Size	Reset Source*1							Access Authority*1	
								POCRES	CVMRES	EXTRES	DBRES	ECMRES	BISTRES	SWRES	SV	UM
RSCAN0	Receive buffer pointer register 42	RSCAN0RMPTR42	$0000\ 0000_H$	32	$FFD2\ 08A4_H$	2	8, 16, 32	√	√	√	√	√	√	√	√	√
RSCAN0	Receive buffer data field 0 register 42	RSCAN0RMDF042	$0000\ 0000_H$	32	$FFD2\ 08A8_H$	2	8, 16, 32	√	√	√	√	√	√	√	√	√
RSCAN0	Receive buffer data field 1 register 42	RSCAN0RMDF142	$0000\ 0000_H$	32	$FFD2\ 08AC_H$	2	8, 16, 32	√	√	√	√	√	√	√	√	√
RSCAN0	Receive buffer ID register 43	RSCAN0RMID43	$0000\ 0000_H$	32	$FFD2\ 08B0_H$	2	8, 16, 32	√	√	√	√	√	√	√	√	√
RSCAN0	Receive buffer pointer register 43	RSCAN0RMPTR43	$0000\ 0000_H$	32	$FFD2\ 08B4_H$	2	8, 16, 32	√	√	√	√	√	√	√	√	√
RSCAN0	Receive buffer data field 0 register 43	RSCAN0RMDF043	$0000\ 0000_H$	32	$FFD2\ 08B8_H$	2	8, 16, 32	√	√	√	√	√	√	√	√	√
RSCAN0	Receive buffer data field 1 register 43	RSCAN0RMDF143	$0000\ 0000_H$	32	$FFD2\ 08BC_H$	2	8, 16, 32	√	√	√	√	√	√	√	√	√
RSCAN0	Receive buffer ID register 44	RSCAN0RMID44	$0000\ 0000_H$	32	$FFD2\ 08C0_H$	2	8, 16, 32	√	√	√	√	√	√	√	√	√
RSCAN0	Receive buffer pointer register 44	RSCAN0RMPTR44	$0000\ 0000_H$	32	$FFD2\ 08C4_H$	2	8, 16, 32	√	√	√	√	√	√	√	√	√
RSCAN0	Receive buffer data field 0 register 44	RSCAN0RMDF044	$0000\ 0000_H$	32	$FFD2\ 08C8_H$	2	8, 16, 32	√	√	√	√	√	√	√	√	√
RSCAN0	Receive buffer data field 1 register 44	RSCAN0RMDF144	$0000\ 0000_H$	32	$FFD2\ 08CC_H$	2	8, 16, 32	√	√	√	√	√	√	√	√	√
RSCAN0	Receive buffer ID register 45	RSCAN0RMID45	$0000\ 0000_H$	32	$FFD2\ 08D0_H$	2	8, 16, 32	√	√	√	√	√	√	√	√	√
RSCAN0	Receive buffer pointer register 45	RSCAN0RMPTR45	$0000\ 0000_H$	32	$FFD2\ 08D4_H$	2	8, 16, 32	√	√	√	√	√	√	√	√	√
RSCAN0	Receive buffer data field 0 register 45	RSCAN0RMDF045	$0000\ 0000_H$	32	$FFD2\ 08D8_H$	2	8, 16, 32	√	√	√	√	√	√	√	√	√
RSCAN0	Receive buffer data field 1 register 45	RSCAN0RMDF145	$0000\ 0000_H$	32	$FFD2\ 08DC_H$	2	8, 16, 32	√	√	√	√	√	√	√	√	√
RSCAN0	Receive buffer ID register 46	RSCAN0RMID46	$0000\ 0000_H$	32	$FFD2\ 08E0_H$	2	8, 16, 32	√	√	√	√	√	√	√	√	√
RSCAN0	Receive buffer pointer register 46	RSCAN0RMPTR46	$0000\ 0000_H$	32	$FFD2\ 08E4_H$	2	8, 16, 32	√	√	√	√	√	√	√	√	√
RSCAN0	Receive buffer data field 0 register 46	RSCAN0RMDF046	$0000\ 0000_H$	32	$FFD2\ 08E8_H$	2	8, 16, 32	√	√	√	√	√	√	√	√	√
RSCAN0	Receive buffer data field 1 register 46	RSCAN0RMDF146	$0000\ 0000_H$	32	$FFD2\ 08EC_H$	2	8, 16, 32	√	√	√	√	√	√	√	√	√
RSCAN0	Receive buffer ID register 47	RSCAN0RMID47	$0000\ 0000_H$	32	$FFD2\ 08F0_H$	2	8, 16, 32	√	√	√	√	√	√	√	√	√
RSCAN0	Receive buffer pointer register 47	RSCAN0RMPTR47	$0000\ 0000_H$	32	$FFD2\ 08F4_H$	2	8, 16, 32	√	√	√	√	√	√	√	√	√
RSCAN0	Receive buffer data field 0 register 47	RSCAN0RMDF047	$0000\ 0000_H$	32	$FFD2\ 08F8_H$	2	8, 16, 32	√	√	√	√	√	√	√	√	√
RSCAN0	Receive buffer data field 1 register 47	RSCAN0RMDF147	$0000\ 0000_H$	32	$FFD2\ 08FC_H$	2	8, 16, 32	√	√	√	√	√	√	√	√	√
RSCAN0	Receive FIFO buffer access ID register 0	RSCAN0RFID0	$0000\ 0000_H$	32	$FFD2\ 0E00_H$	2	8, 16, 32	√	√	√	√	√	√	√	√	√
RSCAN0	Receive FIFO buffer access pointer register 0	RSCAN0RFPTR0	$0000\ 0000_H$	32	$FFD2\ 0E04_H$	2	8, 16, 32	√	√	√	√	√	√	√	√	√
RSCAN0	Receive FIFO buffer access data field 0 register 0	RSCAN0RFDF00	$0000\ 0000_H$	32	$FFD2\ 0E08_H$	2	8, 16, 32	√	√	√	√	√	√	√	√	√
RSCAN0	Receive FIFO buffer access data field 1 register 0	RSCAN0RFDF10	$0000\ 0000_H$	32	$FFD2\ 0E0C_H$	2	8, 16, 32	√	√	√	√	√	√	√	√	√
RSCAN0	Receive FIFO buffer access ID register 1	RSCAN0RFID1	$0000\ 0000_H$	32	$FFD2\ 0E10_H$	2	8, 16, 32	√	√	√	√	√	√	√	√	√
RSCAN0	Receive FIFO buffer access pointer register 1	RSCAN0RFPTR1	$0000\ 0000_H$	32	$FFD2\ 0E14_H$	2	8, 16, 32	√	√	√	√	√	√	√	√	√
RSCAN0	Receive FIFO buffer access data field 0 register 1	RSCAN0RFDF01	$0000\ 0000_H$	32	$FFD2\ 0E18_H$	2	8, 16, 32	√	√	√	√	√	√	√	√	√
RSCAN0	Receive FIFO buffer access data field 1 register 1	RSCAN0RFDF11	$0000\ 0000_H$	32	$FFD2\ 0E1C_H$	2	8, 16, 32	√	√	√	√	√	√	√	√	√
RSCAN0	Receive FIFO buffer access ID register 2	RSCAN0RFID2	$0000\ 0000_H$	32	$FFD2\ 0E20_H$	2	8, 16, 32	√	√	√	√	√	√	√	√	√
RSCAN0	Receive FIFO buffer access pointer register 2	RSCAN0RFPTR2	$0000\ 0000_H$	32	$FFD2\ 0E24_H$	2	8, 16, 32	√	√	√	√	√	√	√	√	√
RSCAN0	Receive FIFO buffer access data field 0 register 2	RSCAN0RFDF02	$0000\ 0000_H$	32	$FFD2\ 0E28_H$	2	8, 16, 32	√	√	√	√	√	√	√	√	√
RSCAN0	Receive FIFO buffer access data field 1 register 2	RSCAN0RFDF12	$0000\ 0000_H$	32	$FFD2\ 0E2C_H$	2	8, 16, 32	√	√	√	√	√	√	√	√	√
RSCAN0	Receive FIFO buffer access ID register 3	RSCAN0RFID3	$0000\ 0000_H$	32	$FFD2\ 0E30_H$	2	8, 16, 32	√	√	√	√	√	√	√	√	√
RSCAN0	Receive FIFO buffer access pointer register 3	RSCAN0RFPTR3	$0000\ 0000_H$	32	$FFD2\ 0E34_H$	2	8, 16, 32	√	√	√	√	√	√	√	√	√
RSCAN0	Receive FIFO buffer access data field 0 register 3	RSCAN0RFDF03	$0000\ 0000_H$	32	$FFD2\ 0E38_H$	2	8, 16, 32	√	√	√	√	√	√	√	√	√
RSCAN0	Receive FIFO buffer access data field 1 register 3	RSCAN0RFDF13	$0000\ 0000_H$	32	$FFD2\ 0E3C_H$	2	8, 16, 32	√	√	√	√	√	√	√	√	√
RSCAN0	Receive FIFO buffer access ID register 4	RSCAN0RFID4	$0000\ 0000_H$	32	$FFD2\ 0E40_H$	2	8, 16, 32	√	√	√	√	√	√	√	√	√
RSCAN0	Receive FIFO buffer access pointer register 4	RSCAN0RFPTR4	$0000\ 0000_H$	32	$FFD2\ 0E44_H$	2	8, 16, 32	√	√	√	√	√	√	√	√	√
RSCAN0	Receive FIFO buffer access data field 0 register 4	RSCAN0RFDF04	$0000\ 0000_H$	32	$FFD2\ 0E48_H$	2	8, 16, 32	√	√	√	√	√	√	√	√	√
RSCAN0	Receive FIFO buffer access data field 1 register 4	RSCAN0RFDF14	$0000\ 0000_H$	32	$FFD2\ 0E4C_H$	2	8, 16, 32	√	√	√	√	√	√	√	√	√
RSCAN0	Receive FIFO buffer access ID register 5	RSCAN0RFID5	$0000\ 0000_H$	32	$FFD2\ 0E50_H$	2	8, 16, 32	√	√	√	√	√	√	√	√	√
RSCAN0	Receive FIFO buffer access pointer register 5	RSCAN0RFPTR5	$0000\ 0000_H$	32	$FFD2\ 0E54_H$	2	8, 16, 32	√	√	√	√	√	√	√	√	√
RSCAN0	Receive FIFO buffer access data field 0 register 5	RSCAN0RFDF05	$0000\ 0000_H$	32	$FFD2\ 0E58_H$	2	8, 16, 32	√	√	√	√	√	√	√	√	√
RSCAN0	Receive FIFO buffer access data field 1 register 5	RSCAN0RFDF15	$0000\ 0000_H$	32	$FFD2\ 0E5C_H$	2	8, 16, 32	√	√	√	√	√	√	√	√	√
RSCAN0	Receive FIFO buffer access ID register 6	RSCAN0RFID6	$0000\ 0000_H$	32	$FFD2\ 0E60_H$	2	8, 16, 32	√	√	√	√	√	√	√	√	√
RSCAN0	Receive FIFO buffer access pointer register 6	RSCAN0RFPTR6	$0000\ 0000_H$	32	$FFD2\ 0E64_H$	2	8, 16, 32	√	√	√	√	√	√	√	√	√
RSCAN0	Receive FIFO buffer access data field 0 register 6	RSCAN0RFDF06	$0000\ 0000_H$	32	$FFD2\ 0E68_H$	2	8, 16, 32	√	√	√	√	√	√	√	√	√
RSCAN0	Receive FIFO buffer access data field 1 register 6	RSCAN0RFDF16	$0000\ 0000_H$	32	$FFD2\ 0E6C_H$	2	8, 16, 32	√	√	√	√	√	√	√	√	√
RSCAN0	Receive FIFO buffer access ID register 7	RSCAN0RFID7	$0000\ 0000_H$	32	$FFD2\ 0E70_H$	2	8, 16, 32	√	√	√	√	√	√	√	√	√
RSCAN0	Receive FIFO buffer access pointer register 7	RSCAN0RFPTR7	$0000\ 0000_H$	32	$FFD2\ 0E74_H$	2	8, 16, 32	√	√	√	√	√	√	√	√	√

Table A.1 List of Registers (29/124)

Module	Register	Symbol	Value after Reset	Number of Bits	Address	Peripheral IP group	Access Size	Reset Source*1							Access Authority*1	
								POCRES	CVMRES	EXTRES	DBRES	ECMRES	BISTRES	SWRES	SV	UM
RSCAN0	Receive FIFO buffer access data field 0 register 7	RSCAN0RFDF07	$0000\ 0000_H$	32	$FFD2\ 0E78_H$	2	8, 16, 32	√	√	√	√	√	√	√	√	√
RSCAN0	Receive FIFO buffer access data field 1 register 7	RSCAN0RFDF17	$0000\ 0000_H$	32	$FFD2\ 0E7C_H$	2	8, 16, 32	√	√	√	√	√	√	√	√	√
RSCAN0	Transmit/receiver FIFO buffer access ID register 0	RSCAN0CFID0	$0000\ 0000_H$	32	$FFD2\ 0E80_H$	2	8, 16, 32	√	√	√	√	√	√	√	√	√
RSCAN0	Transmit/receiver FIFO buffer access pointer register 0	RSCAN0CFPTR0	$0000\ 0000_H$	32	$FFD2\ 0E84_H$	2	8, 16, 32	√	√	√	√	√	√	√	√	√
RSCAN0	Transmit/receiver FIFO buffer access data field 0 register 0	RSCAN0CFDF00	$0000\ 0000_H$	32	$FFD2\ 0E88_H$	2	8, 16, 32	√	√	√	√	√	√	√	√	√
RSCAN0	Transmit/receive FIFO buffer access data field 1 register 0	RSCAN0CFDF10	$0000\ 0000_H$	32	$FFD2\ 0E8C_H$	2	8, 16, 32	√	√	√	√	√	√	√	√	√
RSCAN0	Transmit/receiver FIFO buffer access ID register 1	RSCAN0CFID1	$0000\ 0000_H$	32	$FFD2\ 0E90_H$	2	8, 16, 32	√	√	√	√	√	√	√	√	√
RSCAN0	Transmit/receiver FIFO buffer access pointer register 1	RSCAN0CFPTR1	$0000\ 0000_H$	32	$FFD2\ 0E94_H$	2	8, 16, 32	√	√	√	√	√	√	√	√	√
RSCAN0	Transmit/receiver FIFO buffer access data field 0 register 1	RSCAN0CFDF01	$0000\ 0000_H$	32	$FFD2\ 0E98_H$	2	8, 16, 32	√	√	√	√	√	√	√	√	√
RSCAN0	Transmit/receive FIFO buffer access data field 1 register 1	RSCAN0CFDF11	$0000\ 0000_H$	32	$FFD2\ 0E9C_H$	2	8, 16, 32	√	√	√	√	√	√	√	√	√
RSCAN0	Transmit/receiver FIFO buffer access ID register 2	RSCAN0CFID2	$0000\ 0000_H$	32	$FFD2\ 0EA0_H$	2	8, 16, 32	√	√	√	√	√	√	√	√	√
RSCAN0	Transmit/receiver FIFO buffer access pointer register 2	RSCAN0CFPTR2	$0000\ 0000_H$	32	$FFD2\ 0EA4_H$	2	8, 16, 32	√	√	√	√	√	√	√	√	√
RSCAN0	Transmit/receiver FIFO buffer access data field 0 register 2	RSCAN0CFDF02	$0000\ 0000_H$	32	$FFD2\ 0EA8_H$	2	8, 16, 32	√	√	√	√	√	√	√	√	√
RSCAN0	Transmit/receive FIFO buffer access data field 1 register 2	RSCAN0CFDF12	$0000\ 0000_H$	32	$FFD2\ 0EAC_H$	2	8, 16, 32	√	√	√	√	√	√	√	√	√
RSCAN0	Transmit/receiver FIFO buffer access ID register 3	RSCAN0CFID3	$0000\ 0000_H$	32	$FFD2\ 0EB0_H$	2	8, 16, 32	√	√	√	√	√	√	√	√	√
RSCAN0	Transmit/receiver FIFO buffer access pointer register 3	RSCAN0CFPTR3	$0000\ 0000_H$	32	$FFD2\ 0EB4_H$	2	8, 16, 32	√	√	√	√	√	√	√	√	√
RSCAN0	Transmit/receiver FIFO buffer access data field 0 register 3	RSCAN0CFDF03	$0000\ 0000_H$	32	$FFD2\ 0EB8_H$	2	8, 16, 32	√	√	√	√	√	√	√	√	√
RSCAN0	Transmit/receive FIFO buffer access data field 1 register 3	RSCAN0CFDF13	$0000\ 0000_H$	32	$FFD2\ 0EBC_H$	2	8, 16, 32	√	√	√	√	√	√	√	√	√
RSCAN0	Transmit/receiver FIFO buffer access ID register 4	RSCAN0CFID4	$0000\ 0000_H$	32	$FFD2\ 0EC0_H$	2	8, 16, 32	√	√	√	√	√	√	√	√	√
RSCAN0	Transmit/receiver FIFO buffer access pointer register 4	RSCAN0CFPTR4	$0000\ 0000_H$	32	$FFD2\ 0EC4_H$	2	8, 16, 32	√	√	√	√	√	√	√	√	√
RSCAN0	Transmit/receiver FIFO buffer access data field 0 register 4	RSCAN0CFDF04	$0000\ 0000_H$	32	$FFD2\ 0EC8_H$	2	8, 16, 32	√	√	√	√	√	√	√	√	√
RSCAN0	Transmit/receive FIFO buffer access data field 1 register 4	RSCAN0CFDF14	$0000\ 0000_H$	32	$FFD2\ 0ECC_H$	2	8, 16, 32	√	√	√	√	√	√	√	√	√
RSCAN0	Transmit/receiver FIFO buffer access ID register 5	RSCAN0CFID5	$0000\ 0000_H$	32	$FFD2\ 0ED0_H$	2	8, 16, 32	√	√	√	√	√	√	√	√	√
RSCAN0	Transmit/receiver FIFO buffer access pointer register 5	RSCAN0CFPTR5	$0000\ 0000_H$	32	$FFD2\ 0ED4_H$	2	8, 16, 32	√	√	√	√	√	√	√	√	√
RSCAN0	Transmit/receiver FIFO buffer access data field 0 register 5	RSCAN0CFDF05	$0000\ 0000_H$	32	$FFD2\ 0ED8_H$	2	8, 16, 32	√	√	√	√	√	√	√	√	√
RSCAN0	Transmit/receive FIFO buffer access data field 1 register 5	RSCAN0CFDF15	$0000\ 0000_H$	32	$FFD2\ 0EDC_H$	2	8, 16, 32	√	√	√	√	√	√	√	√	√
RSCAN0	Transmit/receiver FIFO buffer access ID register 6	RSCAN0CFID6	$0000\ 0000_H$	32	$FFD2\ 0EE0_H$	2	8, 16, 32	√	√	√	√	√	√	√	√	√
RSCAN0	Transmit/receiver FIFO buffer access pointer register 6	RSCAN0CFPTR6	$0000\ 0000_H$	32	$FFD2\ 0EE4_H$	2	8, 16, 32	√	√	√	√	√	√	√	√	√
RSCAN0	Transmit/receiver FIFO buffer access data field 0 register 6	RSCAN0CFDF06	$0000\ 0000_H$	32	$FFD2\ 0EE8_H$	2	8, 16, 32	√	√	√	√	√	√	√	√	√
RSCAN0	Transmit/receive FIFO buffer access data field 1 register 6	RSCAN0CFDF16	$0000\ 0000_H$	32	$FFD2\ 0EEC_H$	2	8, 16, 32	√	√	√	√	√	√	√	√	√
RSCAN0	Transmit/receiver FIFO buffer access ID register 7	RSCAN0CFID7	$0000\ 0000_H$	32	$FFD2\ 0EF0_H$	2	8, 16, 32	√	√	√	√	√	√	√	√	√
RSCAN0	Transmit/receiver FIFO buffer access pointer register 7	RSCAN0CFPTR7	$0000\ 0000_H$	32	$FFD2\ 0EF4_H$	2	8, 16, 32	√	√	√	√	√	√	√	√	√
RSCAN0	Transmit/receiver FIFO buffer access data field 0 register 7	RSCAN0CFDF07	$0000\ 0000_H$	32	$FFD2\ 0EF8_H$	2	8, 16, 32	√	√	√	√	√	√	√	√	√
RSCAN0	Transmit/receive FIFO buffer access data field 1 register 7	RSCAN0CFDF17	$0000\ 0000_H$	32	$FFD2\ 0EFC_H$	2	8, 16, 32	√	√	√	√	√	√	√	√	√
RSCAN0	Transmit/receiver FIFO buffer access ID register 8	RSCAN0CFID8	$0000\ 0000_H$	32	$FFD2\ 0F00_H$	2	8, 16, 32	√	√	√	√	√	√	√	√	√
RSCAN0	Transmit/receiver FIFO buffer access pointer register 8	RSCAN0CFPTR8	$0000\ 0000_H$	32	$FFD2\ 0F04_H$	2	8, 16, 32	√	√	√	√	√	√	√	√	√
RSCAN0	Transmit/receiver FIFO buffer access data field 0 register 8	RSCAN0CFDF08	$0000\ 0000_H$	32	$FFD2\ 0F08_H$	2	8, 16, 32	√	√	√	√	√	√	√	√	√
RSCAN0	Transmit/receive FIFO buffer access data field 1 register 8	RSCAN0CFDF18	$0000\ 0000_H$	32	$FFD2\ 0F0C_H$	2	8, 16, 32	√	√	√	√	√	√	√	√	√
RSCAN0	Transmit buffer ID register 0	RSCAN0TMID0	$0000\ 0000_H$	32	$FFD2\ 1000_H$	2	8, 16, 32	√	√	√	√	√	√	√	√	√
RSCAN0	Transmit buffer pointer register 0	RSCAN0TMPTR0	$0000\ 0000_H$	32	$FFD2\ 1004_H$	2	8, 16, 32	√	√	√	√	√	√	√	√	√
RSCAN0	Transmit buffer data field 0 register 0	RSCAN0TMDF00	$0000\ 0000_H$	32	$FFD2\ 1008_H$	2	8, 16, 32	√	√	√	√	√	√	√	√	√
RSCAN0	Transmit buffer data field 1 register 0	RSCAN0TMDF10	$0000\ 0000_H$	32	$FFD2\ 100C_H$	2	8, 16, 32	√	√	√	√	√	√	√	√	√
RSCAN0	Transmit buffer ID register 1	RSCAN0TMID1	$0000\ 0000_H$	32	$FFD2\ 1010_H$	2	8, 16, 32	√	√	√	√	√	√	√	√	√
RSCAN0	Transmit buffer pointer register 1	RSCAN0TMPTR1	$0000\ 0000_H$	32	$FFD2\ 1014_H$	2	8, 16, 32	√	√	√	√	√	√	√	√	√
RSCAN0	Transmit buffer data field 0 register 1	RSCAN0TMDF01	$0000\ 0000_H$	32	$FFD2\ 1018_H$	2	8, 16, 32	√	√	√	√	√	√	√	√	√
RSCAN0	Transmit buffer data field 1 register 1	RSCAN0TMDF11	$0000\ 0000_H$	32	$FFD2\ 101C_H$	2	8, 16, 32	√	√	√	√	√	√	√	√	√
RSCAN0	Transmit buffer ID register 2	RSCAN0TMID2	$0000\ 0000_H$	32	$FFD2\ 1020_H$	2	8, 16, 32	√	√	√	√	√	√	√	√	√
RSCAN0	Transmit buffer pointer register 2	RSCAN0TMPTR2	$0000\ 0000_H$	32	$FFD2\ 1024_H$	2	8, 16, 32	√	√	√	√	√	√	√	√	√
RSCAN0	Transmit buffer data field 0 register 2	RSCAN0TMDF02	$0000\ 0000_H$	32	$FFD2\ 1028_H$	2	8, 16, 32	√	√	√	√	√	√	√	√	√
RSCAN0	Transmit buffer data field 1 register 2	RSCAN0TMDF12	$0000\ 0000_H$	32	$FFD2\ 102C_H$	2	8, 16, 32	√	√	√	√	√	√	√	√	√
RSCAN0	Transmit buffer ID register 3	RSCAN0TMID3	$0000\ 0000_H$	32	$FFD2\ 1030_H$	2	8, 16, 32	√	√	√	√	√	√	√	√	√
RSCAN0	Transmit buffer pointer register 3	RSCAN0TMPTR3	$0000\ 0000_H$	32	$FFD2\ 1034_H$	2	8, 16, 32	√	√	√	√	√	√	√	√	√
RSCAN0	Transmit buffer data field 0 register 3	RSCAN0TMDF03	$0000\ 0000_H$	32	$FFD2\ 1038_H$	2	8, 16, 32	√	√	√	√	√	√	√	√	√

Table A.1 List of Registers (30/124)

Module	Register	Symbol	Value after Reset	Number of Bits	Address	Peripheral IP group	Access Size	Reset Source*1							Access Authority*1	
								POCRES	CVMRES	EXTRES	DBRES	ECMRES	BISTRES	SWRES	SV	UM
RSCAN0	Transmit buffer data field 1 register 3	RSCAN0TMDF13	$0000\ 0000_H$	32	$FFD2\ 103C_H$	2	8, 16, 32	√	√	√	√	√	√	√	√	√
RSCAN0	Transmit buffer ID register 4	RSCAN0TMID4	$0000\ 0000_H$	32	$FFD2\ 1040_H$	2	8, 16, 32	√	√	√	√	√	√	√	√	√
RSCAN0	Transmit buffer pointer register 4	RSCAN0TMPTR4	$0000\ 0000_H$	32	$FFD2\ 1044_H$	2	8, 16, 32	√	√	√	√	√	√	√	√	√
RSCAN0	Transmit buffer data field 0 register 4	RSCAN0TMDF04	$0000\ 0000_H$	32	$FFD2\ 1048_H$	2	8, 16, 32	√	√	√	√	√	√	√	√	√
RSCAN0	Transmit buffer data field 1 register 4	RSCAN0TMDF14	$0000\ 0000_H$	32	$FFD2\ 104C_H$	2	8, 16, 32	√	√	√	√	√	√	√	√	√
RSCAN0	Transmit buffer ID register 5	RSCAN0TMID5	$0000\ 0000_H$	32	$FFD2\ 1050_H$	2	8, 16, 32	√	√	√	√	√	√	√	√	√
RSCAN0	Transmit buffer pointer register 5	RSCAN0TMPTR5	$0000\ 0000_H$	32	$FFD2\ 1054_H$	2	8, 16, 32	√	√	√	√	√	√	√	√	√
RSCAN0	Transmit buffer data field 0 register 5	RSCAN0TMDF05	$0000\ 0000_H$	32	$FFD2\ 1058_H$	2	8, 16, 32	√	√	√	√	√	√	√	√	√
RSCAN0	Transmit buffer data field 1 register 5	RSCAN0TMDF15	$0000\ 0000_H$	32	$FFD2\ 105C_H$	2	8, 16, 32	√	√	√	√	√	√	√	√	√
RSCAN0	Transmit buffer ID register 6	RSCAN0TMID6	$0000\ 0000_H$	32	$FFD2\ 1060_H$	2	8, 16, 32	√	√	√	√	√	√	√	√	√
RSCAN0	Transmit buffer pointer register 6	RSCAN0TMPTR6	$0000\ 0000_H$	32	$FFD2\ 1064_H$	2	8, 16, 32	√	√	√	√	√	√	√	√	√
RSCAN0	Transmit buffer data field 0 register 6	RSCAN0TMDF06	$0000\ 0000_H$	32	$FFD2\ 1068_H$	2	8, 16, 32	√	√	√	√	√	√	√	√	√
RSCAN0	Transmit buffer data field 1 register 6	RSCAN0TMDF16	$0000\ 0000_H$	32	$FFD2\ 106C_H$	2	8, 16, 32	√	√	√	√	√	√	√	√	√
RSCAN0	Transmit buffer ID register 7	RSCAN0TMID7	$0000\ 0000_H$	32	$FFD2\ 1070_H$	2	8, 16, 32	√	√	√	√	√	√	√	√	√
RSCAN0	Transmit buffer pointer register 7	RSCAN0TMPTR7	$0000\ 0000_H$	32	$FFD2\ 1074_H$	2	8, 16, 32	√	√	√	√	√	√	√	√	√
RSCAN0	Transmit buffer data field 0 register 7	RSCAN0TMDF07	$0000\ 0000_H$	32	$FFD2\ 1078_H$	2	8, 16, 32	√	√	√	√	√	√	√	√	√
RSCAN0	Transmit buffer data field 1 register 7	RSCAN0TMDF17	$0000\ 0000_H$	32	$FFD2\ 107C_H$	2	8, 16, 32	√	√	√	√	√	√	√	√	√
RSCAN0	Transmit buffer ID register 8	RSCAN0TMID8	$0000\ 0000_H$	32	$FFD2\ 1080_H$	2	8, 16, 32	√	√	√	√	√	√	√	√	√
RSCAN0	Transmit buffer pointer register 8	RSCAN0TMPTR8	$0000\ 0000_H$	32	$FFD2\ 1084_H$	2	8, 16, 32	√	√	√	√	√	√	√	√	√
RSCAN0	Transmit buffer data field 0 register 8	RSCAN0TMDF08	$0000\ 0000_H$	32	$FFD2\ 1088_H$	2	8, 16, 32	√	√	√	√	√	√	√	√	√
RSCAN0	Transmit buffer data field 1 register 8	RSCAN0TMDF18	$0000\ 0000_H$	32	$FFD2\ 108C_H$	2	8, 16, 32	√	√	√	√	√	√	√	√	√
RSCAN0	Transmit buffer ID register 9	RSCAN0TMID9	$0000\ 0000_H$	32	$FFD2\ 1090_H$	2	8, 16, 32	√	√	√	√	√	√	√	√	√
RSCAN0	Transmit buffer pointer register 9	RSCAN0TMPTR9	$0000\ 0000_H$	32	$FFD2\ 1094_H$	2	8, 16, 32	√	√	√	√	√	√	√	√	√
RSCAN0	Transmit buffer data field 0 register 9	RSCAN0TMDF09	$0000\ 0000_H$	32	$FFD2\ 1098_H$	2	8, 16, 32	√	√	√	√	√	√	√	√	√
RSCAN0	Transmit buffer data field 1 register 9	RSCAN0TMDF19	$0000\ 0000_H$	32	$FFD2\ 109C_H$	2	8, 16, 32	√	√	√	√	√	√	√	√	√
RSCAN0	Transmit buffer ID register 10	RSCAN0TMID10	$0000\ 0000_H$	32	$FFD2\ 10A0_H$	2	8, 16, 32	√	√	√	√	√	√	√	√	√
RSCAN0	Transmit buffer pointer register 10	RSCAN0TMPTR10	$0000\ 0000_H$	32	$FFD2\ 10A4_H$	2	8, 16, 32	√	√	√	√	√	√	√	√	√
RSCAN0	Transmit buffer data field 0 register 10	RSCAN0TMDF010	$0000\ 0000_H$	32	$FFD2\ 10A8_H$	2	8, 16, 32	√	√	√	√	√	√	√	√	√
RSCAN0	Transmit buffer data field 1 register 10	RSCAN0TMDF110	$0000\ 0000_H$	32	$FFD2\ 10AC_H$	2	8, 16, 32	√	√	√	√	√	√	√	√	√
RSCAN0	Transmit buffer ID register 11	RSCAN0TMID11	$0000\ 0000_H$	32	$FFD2\ 10B0_H$	2	8, 16, 32	√	√	√	√	√	√	√	√	√
RSCAN0	Transmit buffer pointer register 11	RSCAN0TMPTR11	$0000\ 0000_H$	32	$FFD2\ 10B4_H$	2	8, 16, 32	√	√	√	√	√	√	√	√	√
RSCAN0	Transmit buffer data field 0 register 11	RSCAN0TMDF011	$0000\ 0000_H$	32	$FFD2\ 10B8_H$	2	8, 16, 32	√	√	√	√	√	√	√	√	√
RSCAN0	Transmit buffer data field 1 register 11	RSCAN0TMDF111	$0000\ 0000_H$	32	$FFD2\ 10BC_H$	2	8, 16, 32	√	√	√	√	√	√	√	√	√
RSCAN0	Transmit buffer ID register 12	RSCAN0TMID12	$0000\ 0000_H$	32	$FFD2\ 10C0_H$	2	8, 16, 32	√	√	√	√	√	√	√	√	√
RSCAN0	Transmit buffer pointer register 12	RSCAN0TMPTR12	$0000\ 0000_H$	32	$FFD2\ 10C4_H$	2	8, 16, 32	√	√	√	√	√	√	√	√	√
RSCAN0	Transmit buffer data field 0 register 12	RSCAN0TMDF012	$0000\ 0000_H$	32	$FFD2\ 10C8_H$	2	8, 16, 32	√	√	√	√	√	√	√	√	√
RSCAN0	Transmit buffer data field 1 register 12	RSCAN0TMDF112	$0000\ 0000_H$	32	$FFD2\ 10CC_H$	2	8, 16, 32	√	√	√	√	√	√	√	√	√
RSCAN0	Transmit buffer ID register 13	RSCAN0TMID13	$0000\ 0000_H$	32	$FFD2\ 10D0_H$	2	8, 16, 32	√	√	√	√	√	√	√	√	√
RSCAN0	Transmit buffer pointer register 13	RSCAN0TMPTR13	$0000\ 0000_H$	32	$FFD2\ 10D4_H$	2	8, 16, 32	√	√	√	√	√	√	√	√	√
RSCAN0	Transmit buffer data field 0 register 13	RSCAN0TMDF013	$0000\ 0000_H$	32	$FFD2\ 10D8_H$	2	8, 16, 32	√	√	√	√	√	√	√	√	√
RSCAN0	Transmit buffer data field 1 register 13	RSCAN0TMDF113	$0000\ 0000_H$	32	$FFD2\ 10DC_H$	2	8, 16, 32	√	√	√	√	√	√	√	√	√
RSCAN0	Transmit buffer ID register 14	RSCAN0TMID14	$0000\ 0000_H$	32	$FFD2\ 10E0_H$	2	8, 16, 32	√	√	√	√	√	√	√	√	√
RSCAN0	Transmit buffer pointer register 14	RSCAN0TMPTR14	$0000\ 0000_H$	32	$FFD2\ 10E4_H$	2	8, 16, 32	√	√	√	√	√	√	√	√	√
RSCAN0	Transmit buffer data field 0 register 14	RSCAN0TMDF014	$0000\ 0000_H$	32	$FFD2\ 10E8_H$	2	8, 16, 32	√	√	√	√	√	√	√	√	√
RSCAN0	Transmit buffer data field 1 register 14	RSCAN0TMDF114	$0000\ 0000_H$	32	$FFD2\ 10EC_H$	2	8, 16, 32	√	√	√	√	√	√	√	√	√
RSCAN0	Transmit buffer ID register 15	RSCAN0TMID15	$0000\ 0000_H$	32	$FFD2\ 10F0_H$	2	8, 16, 32	√	√	√	√	√	√	√	√	√
RSCAN0	Transmit buffer pointer register 15	RSCAN0TMPTR15	$0000\ 0000_H$	32	$FFD2\ 10F4_H$	2	8, 16, 32	√	√	√	√	√	√	√	√	√
RSCAN0	Transmit buffer data field 0 register 15	RSCAN0TMDF015	$0000\ 0000_H$	32	$FFD2\ 10F8_H$	2	8, 16, 32	√	√	√	√	√	√	√	√	√
RSCAN0	Transmit buffer data field 1 register 15	RSCAN0TMDF115	$0000\ 0000_H$	32	$FFD2\ 10FC_H$	2	8, 16, 32	√	√	√	√	√	√	√	√	√
RSCAN0	Transmit buffer ID register 16	RSCAN0TMID16	$0000\ 0000_H$	32	$FFD2\ 1100_H$	2	8, 16, 32	√	√	√	√	√	√	√	√	√
RSCAN0	Transmit buffer pointer register 16	RSCAN0TMPTR16	$0000\ 0000_H$	32	$FFD2\ 1104_H$	2	8, 16, 32	√	√	√	√	√	√	√	√	√
RSCAN0	Transmit buffer data field 0 register 16	RSCAN0TMDF016	$0000\ 0000_H$	32	$FFD2\ 1108_H$	2	8, 16, 32	√	√	√	√	√	√	√	√	√
RSCAN0	Transmit buffer data field 1 register 16	RSCAN0TMDF116	$0000\ 0000_H$	32	$FFD2\ 110C_H$	2	8, 16, 32	√	√	√	√	√	√	√	√	√

Table A.1 List of Registers (31/124)

Module	Register	Symbol	Value after Reset	Number of Bits	Address	Peripheral IP group	Access Size	Reset Source*1							Access Authority*1	
								POCRES	CVMRES	EXTRES	DBRES	ECMRES	BISTRES	SWRES	SV	UM
RSCAN0	Transmit buffer ID register 17	RSCAN0TMID17	0000 0000$_H$	32	FFD2 1110$_H$	2	8, 16, 32	√	√	√	√	√	√	√	√	√
RSCAN0	Transmit buffer pointer register 17	RSCAN0TMPTR17	0000 0000$_H$	32	FFD2 1114$_H$	2	8, 16, 32	√	√	√	√	√	√	√	√	√
RSCAN0	Transmit buffer data field 0 register 17	RSCAN0TMDF017	0000 0000$_H$	32	FFD2 1118$_H$	2	8, 16, 32	√	√	√	√	√	√	√	√	√
RSCAN0	Transmit buffer data field 1 register 17	RSCAN0TMDF117	0000 0000$_H$	32	FFD2 111C$_H$	2	8, 16, 32	√	√	√	√	√	√	√	√	√
RSCAN0	Transmit buffer ID register 18	RSCAN0TMID18	0000 0000$_H$	32	FFD2 1120$_H$	2	8, 16, 32	√	√	√	√	√	√	√	√	√
RSCAN0	Transmit buffer pointer register 18	RSCAN0TMPTR18	0000 0000$_H$	32	FFD2 1124$_H$	2	8, 16, 32	√	√	√	√	√	√	√	√	√
RSCAN0	Transmit buffer data field 0 register 18	RSCAN0TMDF018	0000 0000$_H$	32	FFD2 1128$_H$	2	8, 16, 32	√	√	√	√	√	√	√	√	√
RSCAN0	Transmit buffer data field 1 register 18	RSCAN0TMDF118	0000 0000$_H$	32	FFD2 112C$_H$	2	8, 16, 32	√	√	√	√	√	√	√	√	√
RSCAN0	Transmit buffer ID register 19	RSCAN0TMID19	0000 0000$_H$	32	FFD2 1130$_H$	2	8, 16, 32	√	√	√	√	√	√	√	√	√
RSCAN0	Transmit buffer pointer register 19	RSCAN0TMPTR19	0000 0000$_H$	32	FFD2 1134$_H$	2	8, 16, 32	√	√	√	√	√	√	√	√	√
RSCAN0	Transmit buffer data field 0 register 19	RSCAN0TMDF019	0000 0000$_H$	32	FFD2 1138$_H$	2	8, 16, 32	√	√	√	√	√	√	√	√	√
RSCAN0	Transmit buffer data field 1 register 19	RSCAN0TMDF119	0000 0000$_H$	32	FFD2 113C$_H$	2	8, 16, 32	√	√	√	√	√	√	√	√	√
RSCAN0	Transmit buffer ID register 20	RSCAN0TMID20	0000 0000$_H$	32	FFD2 1140$_H$	2	8, 16, 32	√	√	√	√	√	√	√	√	√
RSCAN0	Transmit buffer pointer register 20	RSCAN0TMPTR20	0000 0000$_H$	32	FFD2 1144$_H$	2	8, 16, 32	√	√	√	√	√	√	√	√	√
RSCAN0	Transmit buffer data field 0 register 20	RSCAN0TMDF020	0000 0000$_H$	32	FFD2 1148$_H$	2	8, 16, 32	√	√	√	√	√	√	√	√	√
RSCAN0	Transmit buffer data field 1 register 20	RSCAN0TMDF120	0000 0000$_H$	32	FFD2 114C$_H$	2	8, 16, 32	√	√	√	√	√	√	√	√	√
RSCAN0	Transmit buffer ID register 21	RSCAN0TMID21	0000 0000$_H$	32	FFD2 1150$_H$	2	8, 16, 32	√	√	√	√	√	√	√	√	√
RSCAN0	Transmit buffer pointer register 21	RSCAN0TMPTR21	0000 0000$_H$	32	FFD2 1154$_H$	2	8, 16, 32	√	√	√	√	√	√	√	√	√
RSCAN0	Transmit buffer data field 0 register 21	RSCAN0TMDF021	0000 0000$_H$	32	FFD2 1158$_H$	2	8, 16, 32	√	√	√	√	√	√	√	√	√
RSCAN0	Transmit buffer data field 1 register 21	RSCAN0TMDF121	0000 0000$_H$	32	FFD2 115C$_H$	2	8, 16, 32	√	√	√	√	√	√	√	√	√
RSCAN0	Transmit buffer ID register 22	RSCAN0TMID22	0000 0000$_H$	32	FFD2 1160$_H$	2	8, 16, 32	√	√	√	√	√	√	√	√	√
RSCAN0	Transmit buffer pointer register 22	RSCAN0TMPTR22	0000 0000$_H$	32	FFD2 1164$_H$	2	8, 16, 32	√	√	√	√	√	√	√	√	√
RSCAN0	Transmit buffer data field 0 register 22	RSCAN0TMDF022	0000 0000$_H$	32	FFD2 1168$_H$	2	8, 16, 32	√	√	√	√	√	√	√	√	√
RSCAN0	Transmit buffer data field 1 register 22	RSCAN0TMDF122	0000 0000$_H$	32	FFD2 116C$_H$	2	8, 16, 32	√	√	√	√	√	√	√	√	√
RSCAN0	Transmit buffer ID register 23	RSCAN0TMID23	0000 0000$_H$	32	FFD2 1170$_H$	2	8, 16, 32	√	√	√	√	√	√	√	√	√
RSCAN0	Transmit buffer pointer register 23	RSCAN0TMPTR23	0000 0000$_H$	32	FFD2 1174$_H$	2	8, 16, 32	√	√	√	√	√	√	√	√	√
RSCAN0	Transmit buffer data field 0 register 23	RSCAN0TMDF023	0000 0000$_H$	32	FFD2 1178$_H$	2	8, 16, 32	√	√	√	√	√	√	√	√	√
RSCAN0	Transmit buffer data field 1 register 23	RSCAN0TMDF123	0000 0000$_H$	32	FFD2 117C$_H$	2	8, 16, 32	√	√	√	√	√	√	√	√	√
RSCAN0	Transmit buffer ID register 24	RSCAN0TMID24	0000 0000$_H$	32	FFD2 1180$_H$	2	8, 16, 32	√	√	√	√	√	√	√	√	√
RSCAN0	Transmit buffer pointer register 24	RSCAN0TMPTR24	0000 0000$_H$	32	FFD2 1184$_H$	2	8, 16, 32	√	√	√	√	√	√	√	√	√
RSCAN0	Transmit buffer data field 0 register 24	RSCAN0TMDF024	0000 0000$_H$	32	FFD2 1188$_H$	2	8, 16, 32	√	√	√	√	√	√	√	√	√
RSCAN0	Transmit buffer data field 1 register 24	RSCAN0TMDF124	0000 0000$_H$	32	FFD2 118C$_H$	2	8, 16, 32	√	√	√	√	√	√	√	√	√
RSCAN0	Transmit buffer ID register 25	RSCAN0TMID25	0000 0000$_H$	32	FFD2 1190$_H$	2	8, 16, 32	√	√	√	√	√	√	√	√	√
RSCAN0	Transmit buffer pointer register 25	RSCAN0TMPTR25	0000 0000$_H$	32	FFD2 1194$_H$	2	8, 16, 32	√	√	√	√	√	√	√	√	√
RSCAN0	Transmit buffer data field 0 register 25	RSCAN0TMDF025	0000 0000$_H$	32	FFD2 1198$_H$	2	8, 16, 32	√	√	√	√	√	√	√	√	√
RSCAN0	Transmit buffer data field 1 register 25	RSCAN0TMDF125	0000 0000$_H$	32	FFD2 119C$_H$	2	8, 16, 32	√	√	√	√	√	√	√	√	√
RSCAN0	Transmit buffer ID register 26	RSCAN0TMID26	0000 0000$_H$	32	FFD2 11A0$_H$	2	8, 16, 32	√	√	√	√	√	√	√	√	√
RSCAN0	Transmit buffer pointer register 26	RSCAN0TMPTR26	0000 0000$_H$	32	FFD2 11A4$_H$	2	8, 16, 32	√	√	√	√	√	√	√	√	√
RSCAN0	Transmit buffer data field 0 register 26	RSCAN0TMDF026	0000 0000$_H$	32	FFD2 11A8$_H$	2	8, 16, 32	√	√	√	√	√	√	√	√	√
RSCAN0	Transmit buffer data field 1 register 26	RSCAN0TMDF126	0000 0000$_H$	32	FFD2 11AC$_H$	2	8, 16, 32	√	√	√	√	√	√	√	√	√
RSCAN0	Transmit buffer ID register 27	RSCAN0TMID27	0000 0000$_H$	32	FFD2 11B0$_H$	2	8, 16, 32	√	√	√	√	√	√	√	√	√
RSCAN0	Transmit buffer pointer register 27	RSCAN0TMPTR27	0000 0000$_H$	32	FFD2 11B4$_H$	2	8, 16, 32	√	√	√	√	√	√	√	√	√
RSCAN0	Transmit buffer data field 0 register 27	RSCAN0TMDF027	0000 0000$_H$	32	FFD2 11B8$_H$	2	8, 16, 32	√	√	√	√	√	√	√	√	√
RSCAN0	Transmit buffer data field 1 register 27	RSCAN0TMDF127	0000 0000$_H$	32	FFD2 11BC$_H$	2	8, 16, 32	√	√	√	√	√	√	√	√	√
RSCAN0	Transmit buffer ID register 28	RSCAN0TMID28	0000 0000$_H$	32	FFD2 11C0$_H$	2	8, 16, 32	√	√	√	√	√	√	√	√	√
RSCAN0	Transmit buffer pointer register 28	RSCAN0TMPTR28	0000 0000$_H$	32	FFD2 11C4$_H$	2	8, 16, 32	√	√	√	√	√	√	√	√	√
RSCAN0	Transmit buffer data field 0 register 28	RSCAN0TMDF028	0000 0000$_H$	32	FFD2 11C8$_H$	2	8, 16, 32	√	√	√	√	√	√	√	√	√
RSCAN0	Transmit buffer data field 1 register 28	RSCAN0TMDF128	0000 0000$_H$	32	FFD2 11CC$_H$	2	8, 16, 32	√	√	√	√	√	√	√	√	√
RSCAN0	Transmit buffer ID register 29	RSCAN0TMID29	0000 0000$_H$	32	FFD2 11D0$_H$	2	8, 16, 32	√	√	√	√	√	√	√	√	√
RSCAN0	Transmit buffer pointer register 29	RSCAN0TMPTR29	0000 0000$_H$	32	FFD2 11D4$_H$	2	8, 16, 32	√	√	√	√	√	√	√	√	√
RSCAN0	Transmit buffer data field 0 register 29	RSCAN0TMDF029	0000 0000$_H$	32	FFD2 11D8$_H$	2	8, 16, 32	√	√	√	√	√	√	√	√	√
RSCAN0	Transmit buffer data field 1 register 29	RSCAN0TMDF129	0000 0000$_H$	32	FFD2 11DC$_H$	2	8, 16, 32	√	√	√	√	√	√	√	√	√
RSCAN0	Transmit buffer ID register 30	RSCAN0TMID30	0000 0000$_H$	32	FFD2 11E0$_H$	2	8, 16, 32	√	√	√	√	√	√	√	√	√

Table A.1 List of Registers (32/124)

Module	Register	Symbol	Value after Reset	Number of Bits	Address	Peripheral IP group	Access Size	Reset Source*1							Access Authority*1	
								POCRES	CVMRES	EXTRES	DBRES	ECMRES	BISTRES	SWRES	SV	UM
RSCAN0	Transmit buffer pointer register 30	RSCAN0TMPTR30	0000 0000$_H$	32	FFD2 11E4$_H$	2	8, 16, 32	√	√	√	√	√	√	√	√	√
RSCAN0	Transmit buffer data field 0 register 30	RSCAN0TMDF030	0000 0000$_H$	32	FFD2 11E8$_H$	2	8, 16, 32	√	√	√	√	√	√	√	√	√
RSCAN0	Transmit buffer data field 1 register 30	RSCAN0TMDF130	0000 0000$_H$	32	FFD2 11EC$_H$	2	8, 16, 32	√	√	√	√	√	√	√	√	√
RSCAN0	Transmit buffer ID register 31	RSCAN0TMID31	0000 0000$_H$	32	FFD2 11F0$_H$	2	8, 16, 32	√	√	√	√	√	√	√	√	√
RSCAN0	Transmit buffer pointer register 31	RSCAN0TMPTR31	0000 0000$_H$	32	FFD2 11F4$_H$	2	8, 16, 32	√	√	√	√	√	√	√	√	√
RSCAN0	Transmit buffer data field 0 register 31	RSCAN0TMDF031	0000 0000$_H$	32	FFD2 11F8$_H$	2	8, 16, 32	√	√	√	√	√	√	√	√	√
RSCAN0	Transmit buffer data field 1 register 31	RSCAN0TMDF131	0000 0000$_H$	32	FFD2 11FC$_H$	2	8, 16, 32	√	√	√	√	√	√	√	√	√
RSCAN0	Transmit buffer ID register 32	RSCAN0TMID32	0000 0000$_H$	32	FFD2 1200$_H$	2	8, 16, 32	√	√	√	√	√	√	√	√	√
RSCAN0	Transmit buffer pointer register 32	RSCAN0TMPTR32	0000 0000$_H$	32	FFD2 1204$_H$	2	8, 16, 32	√	√	√	√	√	√	√	√	√
RSCAN0	Transmit buffer data field 0 register 32	RSCAN0TMDF032	0000 0000$_H$	32	FFD2 1208$_H$	2	8, 16, 32	√	√	√	√	√	√	√	√	√
RSCAN0	Transmit buffer data field 1 register 32	RSCAN0TMDF132	0000 0000$_H$	32	FFD2 120C$_H$	2	8, 16, 32	√	√	√	√	√	√	√	√	√
RSCAN0	Transmit buffer ID register 33	RSCAN0TMID33	0000 0000$_H$	32	FFD2 1210$_H$	2	8, 16, 32	√	√	√	√	√	√	√	√	√
RSCAN0	Transmit buffer pointer register 33	RSCAN0TMPTR33	0000 0000$_H$	32	FFD2 1214$_H$	2	8, 16, 32	√	√	√	√	√	√	√	√	√
RSCAN0	Transmit buffer data field 0 register 33	RSCAN0TMDF033	0000 0000$_H$	32	FFD2 1218$_H$	2	8, 16, 32	√	√	√	√	√	√	√	√	√
RSCAN0	Transmit buffer data field 1 register 33	RSCAN0TMDF133	0000 0000$_H$	32	FFD2 121C$_H$	2	8, 16, 32	√	√	√	√	√	√	√	√	√
RSCAN0	Transmit buffer ID register 34	RSCAN0TMID34	0000 0000$_H$	32	FFD2 1220$_H$	2	8, 16, 32	√	√	√	√	√	√	√	√	√
RSCAN0	Transmit buffer pointer register 34	RSCAN0TMPTR34	0000 0000$_H$	32	FFD2 1224$_H$	2	8, 16, 32	√	√	√	√	√	√	√	√	√
RSCAN0	Transmit buffer data field 0 register 34	RSCAN0TMDF034	0000 0000$_H$	32	FFD2 1228$_H$	2	8, 16, 32	√	√	√	√	√	√	√	√	√
RSCAN0	Transmit buffer data field 1 register 34	RSCAN0TMDF134	0000 0000$_H$	32	FFD2 122C$_H$	2	8, 16, 32	√	√	√	√	√	√	√	√	√
RSCAN0	Transmit buffer ID register 35	RSCAN0TMID35	0000 0000$_H$	32	FFD2 1230$_H$	2	8, 16, 32	√	√	√	√	√	√	√	√	√
RSCAN0	Transmit buffer pointer register 35	RSCAN0TMPTR35	0000 0000$_H$	32	FFD2 1234$_H$	2	8, 16, 32	√	√	√	√	√	√	√	√	√
RSCAN0	Transmit buffer data field 0 register 35	RSCAN0TMDF035	0000 0000$_H$	32	FFD2 1238$_H$	2	8, 16, 32	√	√	√	√	√	√	√	√	√
RSCAN0	Transmit buffer data field 1 register 35	RSCAN0TMDF135	0000 0000$_H$	32	FFD2 123C$_H$	2	8, 16, 32	√	√	√	√	√	√	√	√	√
RSCAN0	Transmit buffer ID register 36	RSCAN0TMID36	0000 0000$_H$	32	FFD2 1240$_H$	2	8, 16, 32	√	√	√	√	√	√	√	√	√
RSCAN0	Transmit buffer pointer register 36	RSCAN0TMPTR36	0000 0000$_H$	32	FFD2 1244$_H$	2	8, 16, 32	√	√	√	√	√	√	√	√	√
RSCAN0	Transmit buffer data field 0 register 36	RSCAN0TMDF036	0000 0000$_H$	32	FFD2 1248$_H$	2	8, 16, 32	√	√	√	√	√	√	√	√	√
RSCAN0	Transmit buffer data field 1 register 36	RSCAN0TMDF136	0000 0000$_H$	32	FFD2 124C$_H$	2	8, 16, 32	√	√	√	√	√	√	√	√	√
RSCAN0	Transmit buffer ID register 37	RSCAN0TMID37	0000 0000$_H$	32	FFD2 1250$_H$	2	8, 16, 32	√	√	√	√	√	√	√	√	√
RSCAN0	Transmit buffer pointer register 37	RSCAN0TMPTR37	0000 0000$_H$	32	FFD2 1254$_H$	2	8, 16, 32	√	√	√	√	√	√	√	√	√
RSCAN0	Transmit buffer data field 0 register 37	RSCAN0TMDF037	0000 0000$_H$	32	FFD2 1258$_H$	2	8, 16, 32	√	√	√	√	√	√	√	√	√
RSCAN0	Transmit buffer data field 1 register 37	RSCAN0TMDF137	0000 0000$_H$	32	FFD2 125C$_H$	2	8, 16, 32	√	√	√	√	√	√	√	√	√
RSCAN0	Transmit buffer ID register 38	RSCAN0TMID38	0000 0000$_H$	32	FFD2 1260$_H$	2	8, 16, 32	√	√	√	√	√	√	√	√	√
RSCAN0	Transmit buffer pointer register 38	RSCAN0TMPTR38	0000 0000$_H$	32	FFD2 1264$_H$	2	8, 16, 32	√	√	√	√	√	√	√	√	√
RSCAN0	Transmit buffer data field 0 register 38	RSCAN0TMDF038	0000 0000$_H$	32	FFD2 1268$_H$	2	8, 16, 32	√	√	√	√	√	√	√	√	√
RSCAN0	Transmit buffer data field 1 register 38	RSCAN0TMDF138	0000 0000$_H$	32	FFD2 126C$_H$	2	8, 16, 32	√	√	√	√	√	√	√	√	√
RSCAN0	Transmit buffer ID register 39	RSCAN0TMID39	0000 0000$_H$	32	FFD2 1270$_H$	2	8, 16, 32	√	√	√	√	√	√	√	√	√
RSCAN0	Transmit buffer pointer register 39	RSCAN0TMPTR39	0000 0000$_H$	32	FFD2 1274$_H$	2	8, 16, 32	√	√	√	√	√	√	√	√	√
RSCAN0	Transmit buffer data field 0 register 39	RSCAN0TMDF039	0000 0000$_H$	32	FFD2 1278$_H$	2	8, 16, 32	√	√	√	√	√	√	√	√	√
RSCAN0	Transmit buffer data field 1 register 39	RSCAN0TMDF139	0000 0000$_H$	32	FFD2 127C$_H$	2	8, 16, 32	√	√	√	√	√	√	√	√	√
RSCAN0	Transmit buffer ID register 40	RSCAN0TMID40	0000 0000$_H$	32	FFD2 1280$_H$	2	8, 16, 32	√	√	√	√	√	√	√	√	√
RSCAN0	Transmit buffer pointer register 40	RSCAN0TMPTR40	0000 0000$_H$	32	FFD2 1284$_H$	2	8, 16, 32	√	√	√	√	√	√	√	√	√
RSCAN0	Transmit buffer data field 0 register 40	RSCAN0TMDF040	0000 0000$_H$	32	FFD2 1288$_H$	2	8, 16, 32	√	√	√	√	√	√	√	√	√
RSCAN0	Transmit buffer data field 1 register 40	RSCAN0TMDF140	0000 0000$_H$	32	FFD2 128C$_H$	2	8, 16, 32	√	√	√	√	√	√	√	√	√
RSCAN0	Transmit buffer ID register 41	RSCAN0TMID41	0000 0000$_H$	32	FFD2 1290$_H$	2	8, 16, 32	√	√	√	√	√	√	√	√	√
RSCAN0	Transmit buffer pointer register 41	RSCAN0TMPTR41	0000 0000$_H$	32	FFD2 1294$_H$	2	8, 16, 32	√	√	√	√	√	√	√	√	√
RSCAN0	Transmit buffer data field 0 register 41	RSCAN0TMDF041	0000 0000$_H$	32	FFD2 1298$_H$	2	8, 16, 32	√	√	√	√	√	√	√	√	√
RSCAN0	Transmit buffer data field 1 register 41	RSCAN0TMDF141	0000 0000$_H$	32	FFD2 129C$_H$	2	8, 16, 32	√	√	√	√	√	√	√	√	√
RSCAN0	Transmit buffer ID register 42	RSCAN0TMID42	0000 0000$_H$	32	FFD2 12A0$_H$	2	8, 16, 32	√	√	√	√	√	√	√	√	√
RSCAN0	Transmit buffer pointer register 42	RSCAN0TMPTR42	0000 0000$_H$	32	FFD2 12A4$_H$	2	8, 16, 32	√	√	√	√	√	√	√	√	√
RSCAN0	Transmit buffer data field 0 register 42	RSCAN0TMDF042	0000 0000$_H$	32	FFD2 12A8$_H$	2	8, 16, 32	√	√	√	√	√	√	√	√	√
RSCAN0	Transmit buffer data field 1 register 42	RSCAN0TMDF142	0000 0000$_H$	32	FFD2 12AC$_H$	2	8, 16, 32	√	√	√	√	√	√	√	√	√
RSCAN0	Transmit buffer ID register 43	RSCAN0TMID43	0000 0000$_H$	32	FFD2 12B0$_H$	2	8, 16, 32	√	√	√	√	√	√	√	√	√
RSCAN0	Transmit buffer pointer register 43	RSCAN0TMPTR43	0000 0000$_H$	32	FFD2 12B4$_H$	2	8, 16, 32	√	√	√	√	√	√	√	√	√

Table A.1 List of Registers (33/124)

Module	Register	Symbol	Value after Reset	Number of Bits	Address	Peripheral IP group	Access Size	Reset Source*1							Access Authority*1	
								POCRES	CVMRES	EXTRES	DBRES	ECMRES	BISTRES	SWRES	SV	UM
RSCAN0	Transmit buffer data field 0 register 43	RSCAN0TMDF043	0000 0000H	32	FFD2 12B8H	2	8, 16, 32	√	√	√	√	√	√	√	√	√
RSCAN0	Transmit buffer data field 1 register 43	RSCAN0TMDF143	0000 0000H	32	FFD2 12BCH	2	8, 16, 32	√	√	√	√	√	√	√	√	√
RSCAN0	Transmit buffer ID register 44	RSCAN0TMID44	0000 0000H	32	FFD2 12C0H	2	8, 16, 32	√	√	√	√	√	√	√	√	√
RSCAN0	Transmit buffer pointer register 44	RSCAN0TMPTR44	0000 0000H	32	FFD2 12C4H	2	8, 16, 32	√	√	√	√	√	√	√	√	√
RSCAN0	Transmit buffer data field 0 register 44	RSCAN0TMDF044	0000 0000H	32	FFD2 12C8H	2	8, 16, 32	√	√	√	√	√	√	√	√	√
RSCAN0	Transmit buffer data field 1 register 44	RSCAN0TMDF144	0000 0000H	32	FFD2 12CCH	2	8, 16, 32	√	√	√	√	√	√	√	√	√
RSCAN0	Transmit buffer ID register 45	RSCAN0TMID45	0000 0000H	32	FFD2 12D0H	2	8, 16, 32	√	√	√	√	√	√	√	√	√
RSCAN0	Transmit buffer pointer register 45	RSCAN0TMPTR45	0000 0000H	32	FFD2 12D4H	2	8, 16, 32	√	√	√	√	√	√	√	√	√
RSCAN0	Transmit buffer data field 0 register 45	RSCAN0TMDF045	0000 0000H	32	FFD2 12D8H	2	8, 16, 32	√	√	√	√	√	√	√	√	√
RSCAN0	Transmit buffer data field 1 register 45	RSCAN0TMDF145	0000 0000H	32	FFD2 12DCH	2	8, 16, 32	√	√	√	√	√	√	√	√	√
RSCAN0	Transmit buffer ID register 46	RSCAN0TMID46	0000 0000H	32	FFD2 12E0H	2	8, 16, 32	√	√	√	√	√	√	√	√	√
RSCAN0	Transmit buffer pointer register 46	RSCAN0TMPTR46	0000 0000H	32	FFD2 12E4H	2	8, 16, 32	√	√	√	√	√	√	√	√	√
RSCAN0	Transmit buffer data field 0 register 46	RSCAN0TMDF046	0000 0000H	32	FFD2 12E8H	2	8, 16, 32	√	√	√	√	√	√	√	√	√
RSCAN0	Transmit buffer data field 1 register 46	RSCAN0TMDF146	0000 0000H	32	FFD2 12ECH	2	8, 16, 32	√	√	√	√	√	√	√	√	√
RSCAN0	Transmit buffer ID register 47	RSCAN0TMID47	0000 0000H	32	FFD2 12F0H	2	8, 16, 32	√	√	√	√	√	√	√	√	√
RSCAN0	Transmit buffer pointer register 47	RSCAN0TMPTR47	0000 0000H	32	FFD2 12F4H	2	8, 16, 32	√	√	√	√	√	√	√	√	√
RSCAN0	Transmit buffer data field 0 register 47	RSCAN0TMDF047	0000 0000H	32	FFD2 12F8H	2	8, 16, 32	√	√	√	√	√	√	√	√	√
RSCAN0	Transmit buffer data field 1 register 47	RSCAN0TMDF147	0000 0000H	32	FFD2 12FCH	2	8, 16, 32	√	√	√	√	√	√	√	√	√
RSCAN0	Transmit history access register 0	RSCAN0THLACC0	0000 0000H	32	FFD2 1800H	2	8, 16, 32	√	√	√	√	√	√	√	√	√
RSCAN0	Transmit history access register 1	RSCAN0THLACC1	0000 0000H	32	FFD2 1804H	2	8, 16, 32	√	√	√	√	√	√	√	√	√
RSCAN0	Transmit history access register 2	RSCAN0THLACC2	0000 0000H	32	FFD2 1808H	2	8, 16, 32	√	√	√	√	√	√	√	√	√
RSCAN0	RAM test page access register 0	RSCAN0RPGACC0	0000 0000H	32	FFD2 1900H	2	8, 16, 32	√	√	√	√	√	√	√	√	√
RSCAN0	RAM test page access register 1	RSCAN0RPGACC1	0000 0000H	32	FFD2 1904H	2	8, 16, 32	√	√	√	√	√	√	√	√	√
RSCAN0	RAM test page access register 2	RSCAN0RPGACC2	0000 0000H	32	FFD2 1908H	2	8, 16, 32	√	√	√	√	√	√	√	√	√
RSCAN0	RAM test page access register 3	RSCAN0RPGACC3	0000 0000H	32	FFD2 190CH	2	8, 16, 32	√	√	√	√	√	√	√	√	√
RSCAN0	RAM test page access register 4	RSCAN0RPGACC4	0000 0000H	32	FFD2 1910H	2	8, 16, 32	√	√	√	√	√	√	√	√	√
RSCAN0	RAM test page access register 5	RSCAN0RPGACC5	0000 0000H	32	FFD2 1914H	2	8, 16, 32	√	√	√	√	√	√	√	√	√
RSCAN0	RAM test page access register 6	RSCAN0RPGACC6	0000 0000H	32	FFD2 1918H	2	8, 16, 32	√	√	√	√	√	√	√	√	√
RSCAN0	RAM test page access register 7	RSCAN0RPGACC7	0000 0000H	32	FFD2 191CH	2	8, 16, 32	√	√	√	√	√	√	√	√	√
RSCAN0	RAM test page access register 8	RSCAN0RPGACC8	0000 0000H	32	FFD2 1920H	2	8, 16, 32	√	√	√	√	√	√	√	√	√
RSCAN0	RAM test page access register 9	RSCAN0RPGACC9	0000 0000H	32	FFD2 1924H	2	8, 16, 32	√	√	√	√	√	√	√	√	√
RSCAN0	RAM test page access register 10	RSCAN0RPGACC10	0000 0000H	32	FFD2 1928H	2	8, 16, 32	√	√	√	√	√	√	√	√	√
RSCAN0	RAM test page access register 11	RSCAN0RPGACC11	0000 0000H	32	FFD2 192CH	2	8, 16, 32	√	√	√	√	√	√	√	√	√
RSCAN0	RAM test page access register 12	RSCAN0RPGACC12	0000 0000H	32	FFD2 1930H	2	8, 16, 32	√	√	√	√	√	√	√	√	√
RSCAN0	RAM test page access register 13	RSCAN0RPGACC13	0000 0000H	32	FFD2 1934H	2	8, 16, 32	√	√	√	√	√	√	√	√	√
RSCAN0	RAM test page access register 14	RSCAN0RPGACC14	0000 0000H	32	FFD2 1938H	2	8, 16, 32	√	√	√	√	√	√	√	√	√
RSCAN0	RAM test page access register 15	RSCAN0RPGACC15	0000 0000H	32	FFD2 193CH	2	8, 16, 32	√	√	√	√	√	√	√	√	√
RSCAN0	RAM test page access register 16	RSCAN0RPGACC16	0000 0000H	32	FFD2 1940H	2	8, 16, 32	√	√	√	√	√	√	√	√	√
RSCAN0	RAM test page access register 17	RSCAN0RPGACC17	0000 0000H	32	FFD2 1944H	2	8, 16, 32	√	√	√	√	√	√	√	√	√
RSCAN0	RAM test page access register 18	RSCAN0RPGACC18	0000 0000H	32	FFD2 1948H	2	8, 16, 32	√	√	√	√	√	√	√	√	√
RSCAN0	RAM test page access register 19	RSCAN0RPGACC19	0000 0000H	32	FFD2 194CH	2	8, 16, 32	√	√	√	√	√	√	√	√	√
RSCAN0	RAM test page access register 20	RSCAN0RPGACC20	0000 0000H	32	FFD2 1950H	2	8, 16, 32	√	√	√	√	√	√	√	√	√
RSCAN0	RAM test page access register 21	RSCAN0RPGACC21	0000 0000H	32	FFD2 1954H	2	8, 16, 32	√	√	√	√	√	√	√	√	√
RSCAN0	RAM test page access register 22	RSCAN0RPGACC22	0000 0000H	32	FFD2 1958H	2	8, 16, 32	√	√	√	√	√	√	√	√	√
RSCAN0	RAM test page access register 23	RSCAN0RPGACC23	0000 0000H	32	FFD2 195CH	2	8, 16, 32	√	√	√	√	√	√	√	√	√
RSCAN0	RAM test page access register 24	RSCAN0RPGACC24	0000 0000H	32	FFD2 1960H	2	8, 16, 32	√	√	√	√	√	√	√	√	√
RSCAN0	RAM test page access register 25	RSCAN0RPGACC25	0000 0000H	32	FFD2 1964H	2	8, 16, 32	√	√	√	√	√	√	√	√	√
RSCAN0	RAM test page access register 26	RSCAN0RPGACC26	0000 0000H	32	FFD2 1968H	2	8, 16, 32	√	√	√	√	√	√	√	√	√
RSCAN0	RAM test page access register 27	RSCAN0RPGACC27	0000 0000H	32	FFD2 196CH	2	8, 16, 32	√	√	√	√	√	√	√	√	√
RSCAN0	RAM test page access register 28	RSCAN0RPGACC28	0000 0000H	32	FFD2 1970H	2	8, 16, 32	√	√	√	√	√	√	√	√	√
RSCAN0	RAM test page access register 29	RSCAN0RPGACC29	0000 0000H	32	FFD2 1974H	2	8, 16, 32	√	√	√	√	√	√	√	√	√
RSCAN0	RAM test page access register 30	RSCAN0RPGACC30	0000 0000H	32	FFD2 1978H	2	8, 16, 32	√	√	√	√	√	√	√	√	√
RSCAN0	RAM test page access register 31	RSCAN0RPGACC31	0000 0000H	32	FFD2 197CH	2	8, 16, 32	√	√	√	√	√	√	√	√	√

Table A.1 List of Registers (34/124)

Module	Register	Symbol	Value after Reset	Number of Bits	Address	Peripheral IP group	Access Size	Reset Source*1							Access Authority*1	
								POCRES	CVMRES	EXTRES	DBRES	ECMRES	BISTRES	SWRES	SV	UM
RSCAN0	RAM test page access register 32	RSCAN0RPGACC32	$0000\ 0000_H$	32	$FFD2\ 1980_H$	2	8, 16, 32	√	√	√	√	√	√	√	√	√
RSCAN0	RAM test page access register 33	RSCAN0RPGACC33	$0000\ 0000_H$	32	$FFD2\ 1984_H$	2	8, 16, 32	√	√	√	√	√	√	√	√	√
RSCAN0	RAM test page access register 34	RSCAN0RPGACC34	$0000\ 0000_H$	32	$FFD2\ 1988_H$	2	8, 16, 32	√	√	√	√	√	√	√	√	√
RSCAN0	RAM test page access register 35	RSCAN0RPGACC35	$0000\ 0000_H$	32	$FFD2\ 198C_H$	2	8, 16, 32	√	√	√	√	√	√	√	√	√
RSCAN0	RAM test page access register 36	RSCAN0RPGACC36	$0000\ 0000_H$	32	$FFD2\ 1990_H$	2	8, 16, 32	√	√	√	√	√	√	√	√	√
RSCAN0	RAM test page access register 37	RSCAN0RPGACC37	$0000\ 0000_H$	32	$FFD2\ 1994_H$	2	8, 16, 32	√	√	√	√	√	√	√	√	√
RSCAN0	RAM test page access register 38	RSCAN0RPGACC38	$0000\ 0000_H$	32	$FFD2\ 1998_H$	2	8, 16, 32	√	√	√	√	√	√	√	√	√
RSCAN0	RAM test page access register 39	RSCAN0RPGACC39	$0000\ 0000_H$	32	$FFD2\ 199C_H$	2	8, 16, 32	√	√	√	√	√	√	√	√	√
RSCAN0	RAM test page access register 40	RSCAN0RPGACC40	$0000\ 0000_H$	32	$FFD2\ 19A0_H$	2	8, 16, 32	√	√	√	√	√	√	√	√	√
RSCAN0	RAM test page access register 41	RSCAN0RPGACC41	$0000\ 0000_H$	32	$FFD2\ 19A4_H$	2	8, 16, 32	√	√	√	√	√	√	√	√	√
RSCAN0	RAM test page access register 42	RSCAN0RPGACC42	$0000\ 0000_H$	32	$FFD2\ 19A8_H$	2	8, 16, 32	√	√	√	√	√	√	√	√	√
RSCAN0	RAM test page access register 43	RSCAN0RPGACC43	$0000\ 0000_H$	32	$FFD2\ 19AC_H$	2	8, 16, 32	√	√	√	√	√	√	√	√	√
RSCAN0	RAM test page access register 44	RSCAN0RPGACC44	$0000\ 0000_H$	32	$FFD2\ 19B0_H$	2	8, 16, 32	√	√	√	√	√	√	√	√	√
RSCAN0	RAM test page access register 45	RSCAN0RPGACC45	$0000\ 0000_H$	32	$FFD2\ 19B4_H$	2	8, 16, 32	√	√	√	√	√	√	√	√	√
RSCAN0	RAM test page access register 46	RSCAN0RPGACC46	$0000\ 0000_H$	32	$FFD2\ 19B8_H$	2	8, 16, 32	√	√	√	√	√	√	√	√	√
RSCAN0	RAM test page access register 47	RSCAN0RPGACC47	$0000\ 0000_H$	32	$FFD2\ 19BC_H$	2	8, 16, 32	√	√	√	√	√	√	√	√	√
RSCAN0	RAM test page access register 48	RSCAN0RPGACC48	$0000\ 0000_H$	32	$FFD2\ 19C0_H$	2	8, 16, 32	√	√	√	√	√	√	√	√	√
RSCAN0	RAM test page access register 49	RSCAN0RPGACC49	$0000\ 0000_H$	32	$FFD2\ 19C4_H$	2	8, 16, 32	√	√	√	√	√	√	√	√	√
RSCAN0	RAM test page access register 50	RSCAN0RPGACC50	$0000\ 0000_H$	32	$FFD2\ 19C8_H$	2	8, 16, 32	√	√	√	√	√	√	√	√	√
RSCAN0	RAM test page access register 51	RSCAN0RPGACC51	$0000\ 0000_H$	32	$FFD2\ 19CC_H$	2	8, 16, 32	√	√	√	√	√	√	√	√	√
RSCAN0	RAM test page access register 52	RSCAN0RPGACC52	$0000\ 0000_H$	32	$FFD2\ 19D0_H$	2	8, 16, 32	√	√	√	√	√	√	√	√	√
RSCAN0	RAM test page access register 53	RSCAN0RPGACC53	$0000\ 0000_H$	32	$FFD2\ 19D4_H$	2	8, 16, 32	√	√	√	√	√	√	√	√	√
RSCAN0	RAM test page access register 54	RSCAN0RPGACC54	$0000\ 0000_H$	32	$FFD2\ 19D8_H$	2	8, 16, 32	√	√	√	√	√	√	√	√	√
RSCAN0	RAM test page access register 55	RSCAN0RPGACC55	$0000\ 0000_H$	32	$FFD2\ 19DC_H$	2	8, 16, 32	√	√	√	√	√	√	√	√	√
RSCAN0	RAM test page access register 56	RSCAN0RPGACC56	$0000\ 0000_H$	32	$FFD2\ 19E0_H$	2	8, 16, 32	√	√	√	√	√	√	√	√	√
RSCAN0	RAM test page access register 57	RSCAN0RPGACC57	$0000\ 0000_H$	32	$FFD2\ 19E4_H$	2	8, 16, 32	√	√	√	√	√	√	√	√	√
RSCAN0	RAM test page access register 58	RSCAN0RPGACC58	$0000\ 0000_H$	32	$FFD2\ 19E8_H$	2	8, 16, 32	√	√	√	√	√	√	√	√	√
RSCAN0	RAM test page access register 59	RSCAN0RPGACC59	$0000\ 0000_H$	32	$FFD2\ 19EC_H$	2	8, 16, 32	√	√	√	√	√	√	√	√	√
RSCAN0	RAM test page access register 60	RSCAN0RPGACC60	$0000\ 0000_H$	32	$FFD2\ 19F0_H$	2	8, 16, 32	√	√	√	√	√	√	√	√	√
RSCAN0	RAM test page access register 61	RSCAN0RPGACC61	$0000\ 0000_H$	32	$FFD2\ 19F4_H$	2	8, 16, 32	√	√	√	√	√	√	√	√	√
RSCAN0	RAM test page access register 62	RSCAN0RPGACC62	$0000\ 0000_H$	32	$FFD2\ 19F8_H$	2	8, 16, 32	√	√	√	√	√	√	√	√	√
RSCAN0	RAM test page access register 63	RSCAN0RPGACC63	$0000\ 0000_H$	32	$FFD2\ 19FC_H$	2	8, 16, 32	√	√	√	√	√	√	√	√	√
DCRA0	CRC input register	DCRA0CIN	$0000\ 0000_H$	32	$FFD5\ 0000_H$	2	32	√	√	√	√	√	√	√	√	√
DCRA0	CRC data register	DCRA0COUT	$0000\ 0000_H$	32	$FFD5\ 0004_H$	2	32	√	√	√	√	√	√	√	√	√
DCRA0	CRC control register	DCRA0CTL	00_H	8	$FFD5\ 0020_H$	2	8	√	√	√	√	√	√	√	√	√
DCRA1	CRC input register	DCRA1CIN	$0000\ 0000_H$	32	$FFD5\ 1000_H$	2	32	√	√	√	√	√	√	√	√	√
DCRA1	CRC data register	DCRA1COUT	$0000\ 0000_H$	32	$FFD5\ 1004_H$	2	32	√	√	√	√	√	√	√	√	√
DCRA1	CRC control register	DCRA1CTL	00_H	8	$FFD5\ 1020_H$	2	8	√	√	√	√	√	√	√	√	√
DCRA2	CRC input register	DCRA2CIN	$0000\ 0000_H$	32	$FFD5\ 2000_H$	2	32	√	√	√	√	√	√	√	√	√
DCRA2	CRC data register	DCRA2COUT	$0000\ 0000_H$	32	$FFD5\ 2004_H$	2	32	√	√	√	√	√	√	√	√	√
DCRA2	CRC control register	DCRA2CTL	00_H	8	$FFD5\ 2020_H$	2	8	√	√	√	√	√	√	√	√	√
DCRA3	CRC input register	DCRA3CIN	$0000\ 0000_H$	32	$FFD5\ 3000_H$	2	32	√	√	√	√	√	√	√	√	√
DCRA3	CRC data register	DCRA3COUT	$0000\ 0000_H$	32	$FFD5\ 3004_H$	2	32	√	√	√	√	√	√	√	√	√
DCRA3	CRC control register	DCRA3CTL	00_H	8	$FFD5\ 3020_H$	2	8	√	√	√	√	√	√	√	√	√
ECMM	ECM master error set trigger register	ECMMESET	00_H	8	$FFD6\ 0000_H$	2	8	√	√	√	√	√	√	√	√	√
ECMM	ECM master error clear trigger register	ECMMECLR	00_H	8	$FFD6\ 0004_H$	2	8	√	√	√	√	√	√	√	√	√
ECMM	ECM master error source status register 0	ECMMESSTR0	$0000\ 0000_H$	32	$FFD6\ 0008_H$	2	32	√	√	—	√	—	—	—	√	√
ECMM	ECM master error source status register 1	ECMMESSTR1	$0000\ 0000_H$	32	$FFD6\ 000C_H$	2	32	√	√	—	√	—	—	—	√	√
ECMM	ECM Master Write-Protection Command Register	ECMMPCMD0	Undefined	32	$FFD6\ 0010_H$	2	32	√	√	√	√	√	√	√	√	√
ECMC	ECM Checker Write Sequence Status Register	ECMCESET	00_H	8	$FFD6\ 1000_H$	2	8	√	√	√	√	√	√	√	√	√
ECMC	ECM Write-Protection Command Register	ECMCECLR	00_H	8	$FFD6\ 1004_H$	2	8	√	√	√	√	√	√	√	√	√
ECMC	ECM Write Sequence Status Register	ECMCESSTR0	$0000\ 0000_H$	32	$FFD6\ 1008_H$	2	32	√	√	—	√	—	—	—	√	√
ECMC	ECM checker error source status register 1	ECMCESSTR1	$0000\ 0000_H$	32	$FFD6\ 100C_H$	2	32	√	√	—	√	—	—	—	√	√

Table A.1 List of Registers (35/124)

Module	Register	Symbol	Value after Reset	Number of Bits	Address	Peripheral IP group	Access Size	Reset Source*1							Access Authority*1	
								POCRES	CVMRES	EXTRES	DBRES	ECMRES	BISTRES	SWRES	SV	UM
ECMC	ECM Checker Write Sequence Status Register	ECMCPCMD0	Undefined	32	FFD6 1010$_H$	2	32	√	√	√	√	√	√	√	√	√
ECM	ECM error pulse configuration register	ECMEPCFG	00$_H$	8	FFD6 2000$_H$	2	8	√	√	√	√	√	√	√	√	√
ECM	ECM EI level interrupt configuration register 0	ECMMICFG0	0000 0000$_H$	32	FFD6 2004$_H$	2	32	√	√	√	√	√	√	√	√	√
ECM	ECM EI level interrupt configuration register 1	ECMMICFG1	0000 0000$_H$	32	FFD6 2008$_H$	2	32	√	√	√	√	√	√	√	√	√
ECM	ECM FE level interrupt configuration register 0	ECMNMICFG0	0000 0000$_H$	32	FFD6 200C$_H$	2	32	√	√	√	√	√	√	√	√	√
ECM	ECM FE level interrupt configuration register 1	ECMNMICFG1	0000 0000$_H$	32	FFD6 2010$_H$	2	32	√	√	√	√	√	√	√	√	√
ECM	ECM internal reset configuration register 0	ECMIRCFG0	0000 000F$_H$	32	FFD6 2014$_H$	2	32	√	√	√	√	√	√	√	√	√
ECM	ECM internal reset configuration register 1	ECMIRCFG1	0000 0000$_H$	32	FFD6 2018$_H$	2	32	√	√	√	√	√	√	√	√	√
ECM	ECM error mask register 0	ECMEMK0	0000 0000$_H$	32	FFD6 201C$_H$	2	32	√	√	√	√	√	√	√	√	√
ECM	ECM error mask register 1	ECMEMK1	0000 0000$_H$	32	FFD6 2020$_H$	2	32	√	√	√	√	√	√	√	√	√
ECM	ECM error source status clear trigger register 0	ECMESSTC0	0000 0000$_H$	32	FFD6 2024$_H$	2	32	√	√	√	√	√	√	√	√	√
ECM	ECM error source status clear trigger register 1	ECMESSTC1	0000 0000$_H$	32	FFD6 2028$_H$	2	32	√	√	√	√	√	√	√	√	√
ECM	ECM Write-Protection Command Register	ECMPCMD1	Undefined	32	FFD6 202C$_H$	2	32	√	√	√	√	√	√	√	√	√
ECM	ECM Write Sequence Status Register	ECMPS	00$_H$	8	FFD6 2030$_H$	2	8	√	√	√	√	√	√	√	√	√
ECM	ECM pseudo error trigger register 0	ECMPE0	0000 0000$_H$	32	FFD6 2034$_H$	2	32	√	√	√	√	√	√	√	√	√
ECM	ECM pseudo error trigger register 1	ECMPE1	0000 0000$_H$	32	FFD6 2038$_H$	2	32	√	√	√	√	√	√	√	√	√
ECM	ECM delay timer control register	ECMDTMCTL	00$_H$	8	FFD6 203C$_H$	2	8	√	√	√	√	√	√	√	√	√
ECM	ECM delay timer register	ECMDTMR	0000$_H$	16	FFD6 2040$_H$	2	16	√	√	√	√	√	√	√	√	√
ECM	ECM delay timer compare register	ECMDTMCMP	0000$_H$	16	FFD6 2044$_H$	2	16	√	√	√	√	√	√	√	√	√
ECM	ECM delay timer configuration register 0	ECMDTMCFG0	0000 0000$_H$	32	FFD6 2048$_H$	2	32	√	√	√	√	√	√	√	√	√
ECM	ECM delay timer configuration register 1	ECMDTMCFG1	0000 0000$_H$	32	FFD6 204C$_H$	2	32	√	√	√	√	√	√	√	√	√
ECM	ECM delay timer configuration register 2	ECMDTMCFG2	0000 0000$_H$	32	FFD6 2050$_H$	2	32	√	√	√	√	√	√	√	√	√
ECM	ECM delay timer configuration register 3	ECMDTMCFG3	0000 0000$_H$	32	FFD6 2054$_H$	2	32	√	√	√	√	√	√	√	√	√
ECM	ECM error pulse control register	ECMEPCTL	00$_H$	8	FFD6 3000$_H$	2	8	√	√	√	√	√	√	√	√	√
SYS	FEINT factor register	FEINTF	0000 0000$_H$	32	FFD6 7000$_H$	2	32	√	√	√	√	√	√	√	√	√
SYS	FEINT factor clear register	FEINTFC	0000 0000$_H$	32	FFD6 7008$_H$	2	32	√	√	√	√	√	√	√	√	√
SYS	Logic BIST signature register 1	LBISTREF1	000A 5A5A$_H$	32	FFD6 9000$_H$	2	32	√	√	√	√	√	—	—	√	√
SYS	Logic BIST signature register 2	LBISTREF2	0005 A5A5$_H$	32	FFD6 9004$_H$	2	32	√	√	√	√	√	—	—	√	√
SYS	Memory BIST signature register	MBISTREF	000A A55A$_H$	32	FFD6 9008$_H$	2	32	√	√	√	√	√	—	—	√	√
SYS	Logic BIST signature result register 1	LBISTSIG1	0005 A5A5$_H$	32	FFD6 900C$_H$	2	32	√	√	√	√	√	—	—	√	√
SYS	Logic BIST signature result register 2	LBISTSIG2	000A 5A5A$_H$	32	FFD6 9010$_H$	2	32	√	√	√	√	√	—	—	√	√
SYS	Memory BIST signature result register	MBISTSIG	0005 5AA5$_H$	32	FFD6 9014$_H$	2	32	√	√	√	√	√	—	—	√	√
SYS	BIST error status register	BSEQ0ST	0000 0001$_H$	32	FFD6 9020$_H$	2	32	√	√	√	√	√	—	—	√	√
SYS	BIST error status inversion register	BSEQ0STB	0000 000E$_H$	32	FFD69024$_H$	2	32	√	√	√	√	√	—	—	√	√
OSTM3	OSTM3 compare register	OSTM3CMP	0000 0000$_H$	32	FFD7 0000$_H$	2	32	√	√	√	√	√	√	√	√	√
OSTM3	OSTM3 counter register	OSTM3CNT	FFFF FFFF$_H$	32	FFD7 0004$_H$	2	32	√	√	√	√	√	√	√	√	√
OSTM3	OSTM3 count enable status register	OSTM3TE	00$_H$	8	FFD7 0010$_H$	2	8	√	√	√	√	√	√	√	√	√
OSTM3	OSTM3 count start trigger register	OSTM3TS	00$_H$	8	FFD7 0014$_H$	2	8	√	√	√	√	√	√	√	√	√
OSTM3	OSTM3 count stop trigger register	OSTM3TT	00$_H$	8	FFD7 0018$_H$	2	8	√	√	√	√	√	√	√	√	√
OSTM3	OSTM3 control register	OSTM3CTL	00$_H$	8	FFD7 0020$_H$	2	8	√	√	√	√	√	√	√	√	√
OSTM4	OSTM4 compare register	OSTM4CMP	0000 0000$_H$	32	FFD7 0040$_H$	2	32	√	√	√	√	√	√	√	√	√
OSTM4	OSTM4 counter register	OSTM4CNT	FFFF FFFF$_H$	32	FFD7 0044$_H$	2	32	√	√	√	√	√	√	√	√	√
OSTM4	OSTM4 count enable status register	OSTM4TE	00$_H$	8	FFD7 0050$_H$	2	8	√	√	√	√	√	√	√	√	√
OSTM4	OSTM4 count start trigger register	OSTM4TS	00$_H$	8	FFD7 0054$_H$	2	8	√	√	√	√	√	√	√	√	√
OSTM4	OSTM4 count stop trigger register	OSTM4TT	00$_H$	8	FFD7 0058$_H$	2	8	√	√	√	√	√	√	√	√	√
OSTM4	OSTM4 control register	OSTM4CTL	00$_H$	8	FFD7 0060$_H$	2	8	√	√	√	√	√	√	√	√	√
OSTM5	OSTM5 compare register	OSTM5CMP	0000 0000$_H$	32	FFD7 0080$_H$	2	32	√	√	√	√	√	√	√	√	√
OSTM5	OSTM5 counter register	OSTM5CNT	FFFF FFFF$_H$	32	FFD7 0084$_H$	2	32	√	√	√	√	√	√	√	√	√
OSTM5	OSTM5 count enable status register	OSTM5TE	00$_H$	8	FFD7 0090$_H$	2	8	√	√	√	√	√	√	√	√	√
OSTM5	OSTM5 count start trigger register	OSTM5TS	00$_H$	8	FFD7 0094$_H$	2	8	√	√	√	√	√	√	√	√	√
OSTM5	OSTM5 count stop trigger register	OSTM5TT	00$_H$	8	FFD7 0098$_H$	2	8	√	√	√	√	√	√	√	√	√
OSTM5	OSTM5 control register	OSTM5CTL	00$_H$	8	FFD7 00A0$_H$	2	8	√	√	√	√	√	√	√	√	√
OSTM6	OSTM6 compare register	OSTM6CMP	0000 0000$_H$	32	FFD7 00C0$_H$	2	32	√	√	√	√	√	√	√	√	√

Table A.1 List of Registers (36/124)

Module	Register	Symbol	Value after Reset	Number of Bits	Address	Peripheral IP group	Access Size	Reset Source*1							Access Authority*1	
								POCRES	CVMRES	EXTRES	DBRES	ECMRES	BISTRES	SWRES	SV	UM
OSTM6	OSTM6 counter register	OSTM6CNT	FFFF $FFFF_H$	32	FFD7 $00C4_H$	2	32	√	√	√	√	√	√	√	√	√
OSTM6	OSTM6 count enable status register	OSTM6TE	00_H	8	FFD7 $00D0_H$	2	8	√	√	√	√	√	√	√	√	√
OSTM6	OSTM6 count start trigger register	OSTM6TS	00_H	8	FFD7 $00D4_H$	2	8	√	√	√	√	√	√	√	√	√
OSTM6	OSTM6 count stop trigger register	OSTM6TT	00_H	8	FFD7 $00D8_H$	2	8	√	√	√	√	√	√	√	√	√
OSTM6	OSTM6 control register	OSTM6CTL	00_H	8	FFD7 $00E0_H$	2	8	√	√	√	√	√	√	√	√	√
OSTM7	OSTM7 compare register	OSTM7CMP	$0000\ 0000_H$	32	FFD7 0100_H	2	32	√	√	√	√	√	√	√	√	√
OSTM7	OSTM7 counter register	OSTM7CNT	FFFF $FFFF_H$	32	FFD7 0104_H	2	32	√	√	√	√	√	√	√	√	√
OSTM7	OSTM7 count enable status register	OSTM7TE	00_H	8	FFD7 0110_H	2	8	√	√	√	√	√	√	√	√	√
OSTM7	OSTM7 count start trigger register	OSTM7TS	00_H	8	FFD7 0114_H	2	8	√	√	√	√	√	√	√	√	√
OSTM7	OSTM7 count stop trigger register	OSTM7TT	00_H	8	FFD7 0118_H	2	8	√	√	√	√	√	√	√	√	√
OSTM7	OSTM7 control register	OSTM7CTL	00_H	8	FFD7 0120_H	2	8	√	√	√	√	√	√	√	√	√
WDTA0	WDTA enable register	WDTA0WDTE	The initial value depends on the start-up options OPWDRUN and OPWDVAC.	8	FFD7 4000_H	2	8	√	√	√	√	√	√	√	√	√
WDTA0	WDTA enable VAC register	WDTA0EVAC	The initial value depends on the start-up options OPWDRUN and OPWDVAC.	8	FFD7 4004_H	2	8	√	√	√	√	√	√	√	√	√
WDTA0	WDTA reference value register	WDTA0REF	00_H	8	FFD7 4008_H	2	8	√	√	√	√	√	√	√	√	√
WDTA0	WDTA mode register	WDTA0MD	The initial value depends on the start-up options OPWDOVF[2:0].	8	FFD7 $400C_H$	2	8	√	√	√	√	√	√	√	√	√
CSIH0	CSIH0 control register 0	CSIH0CTL0	00_H	8	FFD8 0000_H	2	1, 8	√	√	√	√	√	√	√	√	√
CSIH0	CSIH0 status register 0	CSIH0STR0	$0000\ 0010_H$	32	FFD8 0004_H	2	32	√	√	√	√	√	√	√	√	√
CSIH0	CSIH0 status clear register 0	CSIH0STCR0	0000_H	16	FFD8 0008_H	2	16	√	√	√	√	√	√	√	√	√
CSIH0	CSIH0 control register 1	CSIH0CTL1	$0000\ 0000_H$	32	FFD8 0010_H	2	32	√	√	√	√	√	√	√	√	√
CSIH0	CSIH0 control register 2	CSIH0CTL2	$E000_H$	16	FFD8 0014_H	2	16	√	√	√	√	√	√	√	√	√
CSIH0	CSIH0 memory control register 1	CSIH0MCTL1	$0000\ 0000_H$	32	FFD8 1000_H	2	32	√	√	√	√	√	√	√	√	√
CSIH0	CSIH0 memory control register 2	CSIH0MCTL2	$0000\ 0000_H$	32	FFD8 1004_H	2	32	√	√	√	√	√	√	√	√	√
CSIH0	CSIH0 transmit data register 0 for word access	CSIH0TX0W	$X0XX\ XXXX_H$	32	FFD8 1008_H	2	32	√	√	√	√	√	√	√	√	√
CSIH0	CSIH0 transmit data register 0 for half word access	CSIH0TX0H	Undefined	16	FFD8 $100C_H$	2	16	√	√	√	√	√	√	√	√	√
CSIH0	CSIH0 receive data register 0 for word access	CSIH0RX0W	$0XXX\ XXXX_H$	32	FFD8 1010_H	2	32	√	√	√	√	√	√	√	√	√
CSIH0	CSIH0 receive data register 0 for half word access	CSIH0RX0H	Undefined	16	FFD8 1014_H	2	16	√	√	√	√	√	√	√	√	√
CSIH0	CSIH0 memory read/write pointer register 0	CSIH0MRWP0	$0000\ 0000_H$	32	FFD8 1018_H	2	32	√	√	√	√	√	√	√	√	√
CSIH0	CSIH0 memory control register 0	CSIH0MCTL0	$001F_H$	16	FFD8 1040_H	2	16	√	√	√	√	√	√	√	√	√
CSIH0	CSIH0 configuration register 0	CSIH0CFG0	$0000\ 0000_H$	32	FFD8 1044_H	2	32	√	√	√	√	√	√	√	√	√
CSIH0	CSIH0 configuration register 1	CSIH0CFG1	$0000\ 0000_H$	32	FFD8 1048_H	2	32	√	√	√	√	√	√	√	√	√
CSIH0	CSIH0 configuration register 2	CSIH0CFG2	$0000\ 0000_H$	32	FFD8 $104C_H$	2	32	√	√	√	√	√	√	√	√	√
CSIH0	CSIH0 configuration register 3	CSIH0CFG3	$0000\ 0000_H$	32	FFD8 1050_H	2	32	√	√	√	√	√	√	√	√	√
CSIH0	CSIH0 configuration register 4	CSIH0CFG4	$0000\ 0000_H$	32	FFD8 1054_H	2	32	√	√	√	√	√	√	√	√	√
CSIH0	CSIH0 configuration register 5	CSIH0CFG5	$0000\ 0000_H$	32	FFD8 1058_H	2	32	√	√	√	√	√	√	√	√	√
CSIH0	CSIH0 configuration register 6	CSIH0CFG6	$0000\ 0000_H$	32	FFD8 $105C_H$	2	32	√	√	√	√	√	√	√	√	√
CSIH0	CSIH0 configuration register 7	CSIH0CFG7	$0000\ 0000_H$	32	FFD8 1060_H	2	32	√	√	√	√	√	√	√	√	√
CSIH0	CSIH0 baud rate setting register 0	CSIH0BRS0	0000_H	16	FFD8 1068_H	2	16	√	√	√	√	√	√	√	√	√
CSIH0	CSIH0 baud rate setting register 1	CSIH0BRS1	0000_H	16	FFD8 $106C_H$	2	16	√	√	√	√	√	√	√	√	√
CSIH0	CSIH0 baud rate setting register 2	CSIH0BRS2	0000_H	16	FFD8 1070_H	2	16	√	√	√	√	√	√	√	√	√
CSIH0	CSIH0 baud rate setting register 3	CSIH0BRS3	0000_H	16	FFD8 1074_H	2	16	√	√	√	√	√	√	√	√	√
CSIH1	CSIH1 control register 0	CSIH1CTL0	00_H	8	FFD8 2000_H	2	1, 8	√	√	√	√	√	√	√	√	√
CSIH1	CSIH1 status register 0	CSIH1STR0	$0000\ 0010_H$	32	FFD8 2004_H	2	32	√	√	√	√	√	√	√	√	√
CSIH1	CSIH1 status clear register 0	CSIH1STCR0	0000_H	16	FFD8 2008_H	2	16	√	√	√	√	√	√	√	√	√
CSIH1	CSIH1 control register 1	CSIH1CTL1	$0000\ 0000_H$	32	FFD8 2010_H	2	32	√	√	√	√	√	√	√	√	√
CSIH1	CSIH1 control register 2	CSIH1CTL2	$E000_H$	16	FFD8 2014_H	2	16	√	√	√	√	√	√	√	√	√
CSIH1	CSIH1 memory control register 1	CSIH1MCTL1	$0000\ 0000_H$	32	FFD8 3000_H	2	32	√	√	√	√	√	√	√	√	√
CSIH1	CSIH1 memory control register 2	CSIH1MCTL2	$0000\ 0000_H$	32	FFD8 3004_H	2	32	√	√	√	√	√	√	√	√	√
CSIH1	CSIH1 transmit data register 0 for word access	CSIH1TX0W	$X0XX\ XXXX_H$	32	FFD8 3008_H	2	32	√	√	√	√	√	√	√	√	√

Table A.1 List of Registers (37/124)

Module	Register	Symbol	Value after Reset	Number of Bits	Address	Peripheral IP group	Access Size	Reset Source*1							Access Authority*1	
								POCRES	CVMRES	EXTRES	DBRES	ECMRES	BISTRES	SWRES	SV	UM
CSIH1	CSIH1 transmit data register 0 for half word access	CSIH1TX0H	Undefined	16	FFD8 300C$_H$	2	16	√	√	√	√	√	√	√	√	√
CSIH1	CSIH1 receive data register 0 for word access	CSIH1RX0W	0XXX XXXX$_H$	32	FFD8 3010$_H$	2	32	√	√	√	√	√	√	√	√	√
CSIH1	CSIH1 receive data register 0 for half word access	CSIH1RX0H	Undefined	16	FFD8 3014$_H$	2	16	√	√	√	√	√	√	√	√	√
CSIH1	CSIH1 memory read/write pointer register 0	CSIH1MRWP0	0000 0000$_H$	32	FFD8 3018$_H$	2	32	√	√	√	√	√	√	√	√	√
CSIH1	CSIH1 memory control register 0	CSIH1MCTL0	001F$_H$	16	FFD8 3040$_H$	2	16	√	√	√	√	√	√	√	√	√
CSIH1	CSIH1 configuration register 0	CSIH1CFG0	0000 0000$_H$	32	FFD8 3044$_H$	2	32	√	√	√	√	√	√	√	√	√
CSIH1	CSIH1 configuration register 1	CSIH1CFG1	0000 0000$_H$	32	FFD8 3048$_H$	2	32	√	√	√	√	√	√	√	√	√
CSIH1	CSIH1 configuration register 2	CSIH1CFG2	0000 0000$_H$	32	FFD8 304C$_H$	2	32	√	√	√	√	√	√	√	√	√
CSIH1	CSIH1 configuration register 3	CSIH1CFG3	0000 0000$_H$	32	FFD8 3050$_H$	2	32	√	√	√	√	√	√	√	√	√
CSIH1	CSIH1 configuration register 4	CSIH1CFG4	0000 0000$_H$	32	FFD8 3054$_H$	2	32	√	√	√	√	√	√	√	√	√
CSIH1	CSIH1 configuration register 5	CSIH1CFG5	0000 0000$_H$	32	FFD8 3058$_H$	2	32	√	√	√	√	√	√	√	√	√
CSIH1	CSIH1 configuration register 6	CSIH1CFG6	0000 0000$_H$	32	FFD8 305C$_H$	2	32	√	√	√	√	√	√	√	√	√
CSIH1	CSIH1 configuration register 7	CSIH1CFG7	0000 0000$_H$	32	FFD8 3060$_H$	2	32	√	√	√	√	√	√	√	√	√
CSIH1	CSIH1 baud rate setting register 0	CSIH1BRS0	0000$_H$	16	FFD8 3068$_H$	2	16	√	√	√	√	√	√	√	√	√
CSIH1	CSIH1 baud rate setting register 1	CSIH1BRS1	0000$_H$	16	FFD8 306C$_H$	2	16	√	√	√	√	√	√	√	√	√
CSIH1	CSIH1 baud rate setting register 2	CSIH1BRS2	0000$_H$	16	FFD8 3070$_H$	2	16	√	√	√	√	√	√	√	√	√
CSIH1	CSIH1 baud rate setting register 3	CSIH1BRS3	0000$_H$	16	FFD8 3074$_H$	2	16	√	√	√	√	√	√	√	√	√
CSIH2	CSIH2 control register 0	CSIH2CTL0	00$_H$	8	FFD8 4000$_H$	2	1, 8	√	√	√	√	√	√	√	√	√
CSIH2	CSIH2 status register 0	CSIH2STR0	0000 0010$_H$	32	FFD8 4004$_H$	2	32	√	√	√	√	√	√	√	√	√
CSIH2	CSIH2 status clear register 0	CSIH2STCR0	0000$_H$	16	FFD8 4008$_H$	2	16	√	√	√	√	√	√	√	√	√
CSIH2	CSIH2 control register 1	CSIH2CTL1	0000 0000$_H$	32	FFD8 4010$_H$	2	32	√	√	√	√	√	√	√	√	√
CSIH2	CSIH2 control register 2	CSIH2CTL2	E000$_H$	16	FFD8 4014$_H$	2	16	√	√	√	√	√	√	√	√	√
CSIH2	CSIH2 memory control register 1	CSIH2MCTL1	0000 0000$_H$	32	FFD8 5000$_H$	2	32	√	√	√	√	√	√	√	√	√
CSIH2	CSIH2 memory control register 2	CSIH2MCTL2	0000 0000$_H$	32	FFD8 5004$_H$	2	32	√	√	√	√	√	√	√	√	√
CSIH2	CSIH2 transmit data register 0 for word access	CSIH2TX0W	X0XX XXXX$_H$	32	FFD8 5008$_H$	2	32	√	√	√	√	√	√	√	√	√
CSIH2	CSIH2 transmit data register 0 for half word access	CSIH2TX0H	Undefined	16	FFD8 500C$_H$	2	16	√	√	√	√	√	√	√	√	√
CSIH2	CSIH2 receive data register 0 for word access	CSIH2RX0W	0XXX XXXX$_H$	32	FFD8 5010$_H$	2	32	√	√	√	√	√	√	√	√	√
CSIH2	CSIH2 receive data register 0 for half word access	CSIH2RX0H	Undefined	16	FFD8 5014$_H$	2	16	√	√	√	√	√	√	√	√	√
CSIH2	CSIH2 memory read/write pointer register 0	CSIH2MRWP0	0000 0000$_H$	32	FFD8 5018$_H$	2	32	√	√	√	√	√	√	√	√	√
CSIH2	CSIH2 memory control register 0	CSIH2MCTL0	001F$_H$	16	FFD8 5040$_H$	2	16	√	√	√	√	√	√	√	√	√
CSIH2	CSIH2 configuration register 0	CSIH2CFG0	0000 0000$_H$	32	FFD8 5044$_H$	2	32	√	√	√	√	√	√	√	√	√
CSIH2	CSIH2 configuration register 1	CSIH2CFG1	0000 0000$_H$	32	FFD8 5048$_H$	2	32	√	√	√	√	√	√	√	√	√
CSIH2	CSIH2 configuration register 2	CSIH2CFG2	0000 0000$_H$	32	FFD8 504C$_H$	2	32	√	√	√	√	√	√	√	√	√
CSIH2	CSIH2 configuration register 3	CSIH2CFG3	0000 0000$_H$	32	FFD8 5050$_H$	2	32	√	√	√	√	√	√	√	√	√
CSIH2	CSIH2 configuration register 4	CSIH2CFG4	0000 0000$_H$	32	FFD8 5054$_H$	2	32	√	√	√	√	√	√	√	√	√
CSIH2	CSIH2 configuration register 5	CSIH2CFG5	0000 0000$_H$	32	FFD8 5058$_H$	2	32	√	√	√	√	√	√	√	√	√
CSIH2	CSIH2 configuration register 6	CSIH2CFG6	0000 0000$_H$	32	FFD8 505C$_H$	2	32	√	√	√	√	√	√	√	√	√
CSIH2	CSIH2 configuration register 7	CSIH2CFG7	0000 0000$_H$	32	FFD8 5060$_H$	2	32	√	√	√	√	√	√	√	√	√
CSIH2	CSIH2 baud rate setting register 0	CSIH2BRS0	0000$_H$	16	FFD8 5068$_H$	2	16	√	√	√	√	√	√	√	√	√
CSIH2	CSIH2 baud rate setting register 1	CSIH2BRS1	0000$_H$	16	FFD8 506C$_H$	2	16	√	√	√	√	√	√	√	√	√
CSIH2	CSIH2 baud rate setting register 2	CSIH2BRS2	0000$_H$	16	FFD8 5070$_H$	2	16	√	√	√	√	√	√	√	√	√
CSIH2	CSIH2 baud rate setting register 3	CSIH2BRS3	0000$_H$	16	FFD8 5074$_H$	2	16	√	√	√	√	√	√	√	√	√
CSIH3	CSIH3 control register 0	CSIH3CTL0	00$_H$	8	FFD8 6000$_H$	2	1, 8	√	√	√	√	√	√	√	√	√
CSIH3	CSIH3 status register 0	CSIH3STR0	0000 0010$_H$	32	FFD8 6004$_H$	2	32	√	√	√	√	√	√	√	√	√
CSIH3	CSIH3 status clear register 0	CSIH3STCR0	0000$_H$	16	FFD8 6008$_H$	2	16	√	√	√	√	√	√	√	√	√
CSIH3	CSIH3 control register 1	CSIH3CTL1	0000 0000$_H$	32	FFD8 6010$_H$	2	32	√	√	√	√	√	√	√	√	√
CSIH3	CSIH3 control register 2	CSIH3CTL2	E000$_H$	16	FFD8 6014$_H$	2	16	√	√	√	√	√	√	√	√	√
CSIH3	CSIH3 memory control register 1	CSIH3MCTL1	0000 0000$_H$	32	FFD8 7000$_H$	2	32	√	√	√	√	√	√	√	√	√
CSIH3	CSIH3 memory control register 2	CSIH3MCTL2	0000 0000$_H$	32	FFD8 7004$_H$	2	32	√	√	√	√	√	√	√	√	√
CSIH3	CSIH3 transmit data register 0 for word access	CSIH3TX0W	X0XX XXXX$_H$	32	FFD8 7008$_H$	2	32	√	√	√	√	√	√	√	√	√
CSIH3	CSIH3 transmit data register 0 for half word access	CSIH3TX0H	Undefined	16	FFD8 700C$_H$	2	16	√	√	√	√	√	√	√	√	√
CSIH3	CSIH3 receive data register 0 for word access	CSIH3RX0W	0XXX XXXX$_H$	32	FFD8 7010$_H$	2	32	√	√	√	√	√	√	√	√	√
CSIH3	CSIH3 receive data register 0 for half word access	CSIH3RX0H	Undefined	16	FFD8 7014$_H$	2	16	√	√	√	√	√	√	√	√	√

Table A.1 List of Registers (38/124)

Module	Register	Symbol	Value after Reset	Number of Bits	Address	Peripheral IP group	Access Size	Reset Source*1							Access Authority*1	
								POCRES	CVMRES	EXTRES	DBRES	ECMRES	BISTRES	SWRES	SV	UM
CSIH3	CSIH3 memory read/write pointer register 0	CSIH3MRWP0	$0000\ 0000_H$	32	$FFD8\ 7018_H$	2	32	√	√	√	√	√	√	√	√	√
CSIH3	CSIH3 memory control register 0	CSIH3MCTL0	$001F_H$	16	$FFD8\ 7040_H$	2	16	√	√	√	√	√	√	√	√	√
CSIH3	CSIH3 configuration register 0	CSIH3CFG0	$0000\ 0000_H$	32	$FFD8\ 7044_H$	2	32	√	√	√	√	√	√	√	√	√
CSIH3	CSIH3 configuration register 1	CSIH3CFG1	$0000\ 0000_H$	32	$FFD8\ 7048_H$	2	32	√	√	√	√	√	√	√	√	√
CSIH3	CSIH3 configuration register 2	CSIH3CFG2	$0000\ 0000_H$	32	$FFD8\ 704C_H$	2	32	√	√	√	√	√	√	√	√	√
CSIH3	CSIH3 configuration register 3	CSIH3CFG3	$0000\ 0000_H$	32	$FFD8\ 7050_H$	2	32	√	√	√	√	√	√	√	√	√
CSIH3	CSIH3 configuration register 4	CSIH3CFG4	$0000\ 0000_H$	32	$FFD8\ 7054_H$	2	32	√	√	√	√	√	√	√	√	√
CSIH3	CSIH3 configuration register 5	CSIH3CFG5	$0000\ 0000_H$	32	$FFD8\ 7058_H$	2	32	√	√	√	√	√	√	√	√	√
CSIH3	CSIH3 configuration register 6	CSIH3CFG6	$0000\ 0000_H$	32	$FFD8\ 705C_H$	2	32	√	√	√	√	√	√	√	√	√
CSIH3	CSIH3 configuration register 7	CSIH3CFG7	$0000\ 0000_H$	32	$FFD8\ 7060_H$	2	32	√	√	√	√	√	√	√	√	√
CSIH3	CSIH3 baud rate setting register 0	CSIH3BRS0	0000_H	16	$FFD8\ 7068_H$	2	16	√	√	√	√	√	√	√	√	√
CSIH3	CSIH3 baud rate setting register 1	CSIH3BRS1	0000_H	16	$FFD8\ 706C_H$	2	16	√	√	√	√	√	√	√	√	√
CSIH3	CSIH3 baud rate setting register 2	CSIH3BRS2	0000_H	16	$FFD8\ 7070_H$	2	16	√	√	√	√	√	√	√	√	√
CSIH3	CSIH3 baud rate setting register 3	CSIH3BRS3	0000_H	16	$FFD8\ 7074_H$	2	16	√	√	√	√	√	√	√	√	√
CSIG0	CSIG0 control register 0	CSIG0CTL0	00_H	8	$FFD8\ A000_H$	2	8	√	√	√	√	√	√	√	√	√
CSIG0	CSIG0 status register 0	CSIG0STR0	$0000\ 0010_H$	32	$FFD8\ A004_H$	2	32	√	√	√	√	√	√	√	√	√
CSIG0	CSIG0 status clear register 0	CSIG0STCR0	0000_H	16	$FFD8\ A008_H$	2	16	√	√	√	√	√	√	√	√	√
CSIG0	CSIG0 control register 1	CSIG0CTL1	$0000\ 0000_H$	32	$FFD8\ A010_H$	2	32	√	√	√	√	√	√	√	√	√
CSIG0	CSIG0 control register 2	CSIG0CTL2	$E000_H$	16	$FFD8\ A014_H$	2	16	√	√	√	√	√	√	√	√	√
CSIG0	CSIG0 Rx-only mode control register 0	CSIG0BCTL0	01_H	8	$FFD8\ B000_H$	2	8	√	√	√	√	√	√	√	√	√
CSIG0	CSIGn transmission register 0 for word access	CSIG0TX0W	$0000\ 0000_H$	32	$FFD8\ B004_H$	2	32	√	√	√	√	√	√	√	√	√
CSIG0	CSIGn transmission register 0 for half word access	CSIG0TX0H	0000_H	16	$FFD8\ B008_H$	2	16	√	√	√	√	√	√	√	√	√
CSIG0	CSIG0 reception register 0	CSIG0RX0	0000_H	16	$FFD8\ B00C_H$	2	16	√	√	√	√	√	√	√	√	√
CSIG0	CSIG0 configuration register 0	CSIG0CFG0	$0000\ 0000_H$	32	$FFD8\ B010_H$	2	32	√	√	√	√	√	√	√	√	√
CSIH	CSIH DMA select register	SELCSIHDMA	00_H	8	$FFD8\ E000_H$	2	8	√	√	√	√	√	√	√	√	√
APDP	P-Bus data parity status register ENCA00	APDPERRST_ENCA00	$0000\ 0000_H$	32	$FFDC\ A000_H$	1	8, 16, 32	√	√	√	√	√	√	√	√	√
APDP	P-Bus data parity status clear register ENCA00	APDPERRSTC_ENCA00	$0000\ 0000_H$	32	$FFDC\ A004_H$	1	8, 16, 32	√	√	√	√	√	√	√	√	√
APDP	P-Bus data parity test mode control register ENCA00	APDPTMC_ENCA00	$0000\ 0000_H$	32	$FFDC\ A008_H$	1	16, 32	√	√	√	√	√	√	√	√	√
APDP	P-Bus data parity error address register ENCA00	APDPERRADR_ENCA00	$0000\ 0000_H$	32	$FFDC\ A00C_H$	1	32	√	√	√	√	√	√	√	√	√
APDP	P-Bus data parity status register ENCA10	APDPERRST_ENCA10	$0000\ 0000_H$	32	$FFDC\ A010_H$	1	8, 16, 32	√	√	√	√	√	√	√	√	√
APDP	P-Bus data parity status clear register ENCA10	APDPERRSTC_ENCA10	$0000\ 0000_H$	32	$FFDC\ A014_H$	1	8, 16, 32	√	√	√	√	√	√	√	√	√
APDP	P-Bus data parity test mode control register ENCA10	APDPTMC_ENCA10	$0000\ 0000_H$	32	$FFDC\ A018_H$	1	16, 32	√	√	√	√	√	√	√	√	√
APDP	P-Bus data parity error address register ENCA10	APDPERRADR_ENCA10	$0000\ 0000_H$	32	$FFDC\ A01C_H$	1	32	√	√	√	√	√	√	√	√	√
APDP	P-Bus data parity status register OSTM00	APDPERRST_OSTM00	$0000\ 0000_H$	32	$FFDC\ A020_H$	1	8, 16, 32	√	√	√	√	√	√	√	√	√
APDP	P-Bus data parity status clear register OSTM00	APDPERRSTC_OSTM00	$0000\ 0000_H$	32	$FFDC\ A024_H$	1	8, 16, 32	√	√	√	√	√	√	√	√	√
APDP	P-Bus data parity test mode control register OSTM00	APDPTMC_OSTM00	$0000\ 0000_H$	32	$FFDC\ A028_H$	1	16, 32	√	√	√	√	√	√	√	√	√
APDP	P-Bus data parity error address register OSTM00	APDPERRADR_OSTM00	$0000\ 0000_H$	32	$FFDC\ A02C_H$	1	32	√	√	√	√	√	√	√	√	√
APDP	P-Bus data parity status register OSTM10	APDPERRST_OSTM10	$0000\ 0000_H$	32	$FFDC\ A030_H$	1	8, 16, 32	√	√	√	√	√	√	√	√	√
APDP	P-Bus data parity status clear register OSTM10	APDPERRSTC_OSTM10	$0000\ 0000_H$	32	$FFDC\ A034_H$	1	8, 16, 32	√	√	√	√	√	√	√	√	√
APDP	P-Bus data parity test mode control register OSTM10	APDPTMC_OSTM10	$0000\ 0000_H$	32	$FFDC\ A038_H$	1	16, 32	√	√	√	√	√	√	√	√	√
APDP	P-Bus data parity error address register OSTM10	APDPERRADR_OSTM10	$0000\ 0000_H$	32	$FFDC\ A03C_H$	1	32	√	√	√	√	√	√	√	√	√
APDP	P-Bus data parity status register PSI50	APDPERRST_PSI50	$0000\ 0000_H$	32	$FFDC\ A040_H$	1	8, 16, 32	√	√	√	√	√	√	√	√	√
APDP	P-Bus data parity status clear register PSI50	APDPERRSTC_PSI50	$0000\ 0000_H$	32	$FFDC\ A044_H$	1	8, 16, 32	√	√	√	√	√	√	√	√	√
APDP	P-Bus data parity test mode control register PSI50	APDPTMC_PSI50	$0000\ 0000_H$	32	$FFDC\ A048_H$	1	16, 32	√	√	√	√	√	√	√	√	√
APDP	P-Bus data parity error address register PSI50	APDPERRADR_PSI50	$0000\ 0000_H$	32	$FFDC\ A04C_H$	1	32	√	√	√	√	√	√	√	√	√
APDP	P-Bus data parity status register PSI51	APDPERRST_PSI51	$0000\ 0000_H$	32	$FFDC\ A050_H$	1	8, 16, 32	√	√	√	√	√	√	√	√	√
APDP	P-Bus data parity status clear register PSI51	APDPERRSTC_PSI51	$0000\ 0000_H$	32	$FFDC\ A054_H$	1	8, 16, 32	√	√	√	√	√	√	√	√	√
APDP	P-Bus data parity test mode control register PSI51	APDPTMC_PSI51	$0000\ 0000_H$	32	$FFDC\ A058_H$	1	16, 32	√	√	√	√	√	√	√	√	√
APDP	P-Bus data parity error address register PSI51	APDPERRADR_PSI51	$0000\ 0000_H$	32	$FFDC\ A05C_H$	1	32	√	√	√	√	√	√	√	√	√

Table A.1 List of Registers (39/124)

Module	Register	Symbol	Value after Reset	Number of Bits	Address	Peripheral IP group	Access Size	Reset Source*1							Access Authority*1	
								POCRES	CVMRES	EXTRES	DBRES	ECMRES	BISTRES	SWRES	SV	UM
APDP	P-Bus data parity status register SENT00	APDPERRST_SENT00	$0000\ 0000_H$	32	$FFDC\ A060_H$	1	8, 16, 32	√	√	√	√	√	√	√	√	√
APDP	P-Bus data parity status clear register SENT00	APDPERRSTC_SENT00	$0000\ 0000_H$	32	$FFDC\ A064_H$	1	8, 16, 32	√	√	√	√	√	√	√	√	√
APDP	P-Bus data parity test mode control register SENT00	APDPTMC_SENT00	$0000\ 0000_H$	32	$FFDC\ A068_H$	1	16, 32	√	√	√	√	√	√	√	√	√
APDP	P-Bus data parity error address register SENT00	APDPERRADR_SENT00	$0000\ 0000_H$	32	$FFDC\ A06C_H$	1	32	√	√	√	√	√	√	√	√	√
APDP	P-Bus data parity status register SENT10	APDPERRST_SENT10	$0000\ 0000_H$	32	$FFDC\ A070_H$	1	8, 16, 32	√	√	√	√	√	√	√	√	√
APDP	P-Bus data parity status clear register SENT10	APDPERRSTC_SENT10	$0000\ 0000_H$	32	$FFDC\ A074_H$	1	8, 16, 32	√	√	√	√	√	√	√	√	√
APDP	P-Bus data parity test mode control register SENT10	APDPTMC_SENT10	$0000\ 0000_H$	32	$FFDC\ A078_H$	1	16, 32	√	√	√	√	√	√	√	√	√
APDP	P-Bus data parity error address register SENT10	APDPERRADR_SENT10	$0000\ 0000_H$	32	$FFDC\ A07C_H$	1	32	√	√	√	√	√	√	√	√	√
APDP	P-Bus data parity status register SENT20	APDPERRST_SENT20	$0000\ 0000_H$	32	$FFDC\ A080_H$	1	8, 16, 32	√	√	√	√	√	√	√	√	√
APDP	P-Bus data parity status clear register SENT20	APDPERRSTC_SENT20	$0000\ 0000_H$	32	$FFDC\ A084_H$	1	8, 16, 32	√	√	√	√	√	√	√	√	√
APDP	P-Bus data parity test mode control register SENT20	APDPTMC_SENT20	$0000\ 0000_H$	32	$FFDC\ A088_H$	1	16, 32	√	√	√	√	√	√	√	√	√
APDP	P-Bus data parity error address register SENT20	APDPERRADR_SENT20	$0000\ 0000_H$	32	$FFDC\ A08C_H$	1	32	√	√	√	√	√	√	√	√	√
APDP	P-Bus data parity status register SENT30	APDPERRST_SENT30	$0000\ 0000_H$	32	$FFDC\ A090_H$	1	8, 16, 32	√	√	√	√	√	√	√	√	√
APDP	P-Bus data parity status clear register SENT30	APDPERRSTC_SENT30	$0000\ 0000_H$	32	$FFDC\ A094_H$	1	8, 16, 32	√	√	√	√	√	√	√	√	√
APDP	P-Bus data parity test mode control register SENT30	APDPTMC_SENT30	$0000\ 0000_H$	32	$FFDC\ A098_H$	1	16, 32	√	√	√	√	√	√	√	√	√
APDP	P-Bus data parity error address register SENT30	APDPERRADR_SENT30	$0000\ 0000_H$	32	$FFDC\ A09C_H$	1	32	√	√	√	√	√	√	√	√	√
APDP	P-Bus data parity status register SENT40	APDPERRST_SENT40	$0000\ 0000_H$	32	$FFDC\ A0A0_H$	1	8, 16, 32	√	√	√	√	√	√	√	√	√
APDP	P-Bus data parity status clear register SENT40	APDPERRSTC_SENT40	$0000\ 0000_H$	32	$FFDC\ A0A4_H$	1	8, 16, 32	√	√	√	√	√	√	√	√	√
APDP	P-Bus data parity test mode control register SENT40	APDPTMC_SENT40	$0000\ 0000_H$	32	$FFDC\ A0A8_H$	1	16, 32	√	√	√	√	√	√	√	√	√
APDP	P-Bus data parity error address register SENT40	APDPERRADR_SENT40	$0000\ 0000_H$	32	$FFDC\ A0AC_H$	1	32	√	√	√	√	√	√	√	√	√
APDP	P-Bus data parity status register SENT50	APDPERRST_SENT50	$0000\ 0000_H$	32	$FFDC\ A0B0_H$	1	8, 16, 32	√	√	√	√	√	√	√	√	√
APDP	P-Bus data parity status clear register SENT50	APDPERRSTC_SENT50	$0000\ 0000_H$	32	$FFDC\ A0B4_H$	1	8, 16, 32	√	√	√	√	√	√	√	√	√
APDP	P-Bus data parity test mode control register SENT50	APDPTMC_SENT50	$0000\ 0000_H$	32	$FFDC\ A0B8_H$	1	16, 32	√	√	√	√	√	√	√	√	√
APDP	P-Bus data parity error address register SENT50	APDPERRADR_SENT50	$0000\ 0000_H$	32	$FFDC\ A0BC_H$	1	32	√	√	√	√	√	√	√	√	√
APDP	P-Bus data parity status register TAUD0	APDPERRST_TAUD0	$0000\ 0000_H$	32	$FFDC\ A0C0_H$	1	8, 16, 32	√	√	√	√	√	√	√	√	√
APDP	P-Bus data parity status clear register TAUD0	APDPERRSTC_TAUD0	$0000\ 0000_H$	32	$FFDC\ A0C4_H$	1	8, 16, 32	√	√	√	√	√	√	√	√	√
APDP	P-Bus data parity test mode control register TAUD0	APDPTMC_TAUD0	$0000\ 0000_H$	32	$FFDC\ A0C8_H$	1	16, 32	√	√	√	√	√	√	√	√	√
APDP	P-Bus data parity error address register TAUD0	APDPERRADR_TAUD0	$0000\ 0000_H$	32	$FFDC\ A0CC_H$	1	32	√	√	√	√	√	√	√	√	√
APDP	P-Bus data parity status register TAUD1	APDPERRST_TAUD1	$0000\ 0000_H$	32	$FFDC\ A0D0_H$	1	8, 16, 32	√	√	√	√	√	√	√	√	√
APDP	P-Bus data parity status clear register TAUD1	APDPERRSTC_TAUD1	$0000\ 0000_H$	32	$FFDC\ A0D4_H$	1	8, 16, 32	√	√	√	√	√	√	√	√	√
APDP	P-Bus data parity test mode control register TAUD1	APDPTMC_TAUD1	$0000\ 0000_H$	32	$FFDC\ A0D8_H$	1	16, 32	√	√	√	√	√	√	√	√	√
APDP	P-Bus data parity error address register TAUD1	APDPERRADR_TAUD1	$0000\ 0000_H$	32	$FFDC\ A0DC_H$	1	32	√	√	√	√	√	√	√	√	√
APDP	P-Bus data parity status register TAUD2	APDPERRST_TAUD2	$0000\ 0000_H$	32	$FFDC\ A0E0_H$	1	8, 16, 32	√	√	√	√	√	√	√	√	√
APDP	P-Bus data parity status clear register TAUD2	APDPERRSTC_TAUD2	$0000\ 0000_H$	32	$FFDC\ A0E4_H$	1	8, 16, 32	√	√	√	√	√	√	√	√	√
APDP	P-Bus data parity test mode control register TAUD2	APDPTMC_TAUD2	$0000\ 0000_H$	32	$FFDC\ A0E8_H$	1	16, 32	√	√	√	√	√	√	√	√	√
APDP	P-Bus data parity error address register TAUD2	APDPERRADR_TAUD2	$0000\ 0000_H$	32	$FFDC\ A0EC_H$	1	32	√	√	√	√	√	√	√	√	√
APDP	P-Bus data parity status register TAUJ0	APDPERRST_TAUJ0	$0000\ 0000_H$	32	$FFDC\ A0F0_H$	1	8, 16, 32	√	√	√	√	√	√	√	√	√
APDP	P-Bus data parity status clear register TAUJ0	APDPERRSTC_TAUJ0	$0000\ 0000_H$	32	$FFDC\ A0F4_H$	1	8, 16, 32	√	√	√	√	√	√	√	√	√
APDP	P-Bus data parity test mode control register TAUJ0	APDPTMC_TAUJ0	$0000\ 0000_H$	32	$FFDC\ A0F8_H$	1	16, 32	√	√	√	√	√	√	√	√	√
APDP	P-Bus data parity error address register TAUJ0	APDPERRADR_TAUJ0	$0000\ 0000_H$	32	$FFDC\ A0FC_H$	1	32	√	√	√	√	√	√	√	√	√
APDP	P-Bus data parity status register TAUJ1	APDPERRST_TAUJ1	$0000\ 0000_H$	32	$FFDC\ A100_H$	1	8, 16, 32	√	√	√	√	√	√	√	√	√
APDP	P-Bus data parity status clear register TAUJ1	APDPERRSTC_TAUJ1	$0000\ 0000_H$	32	$FFDC\ A104_H$	1	8, 16, 32	√	√	√	√	√	√	√	√	√
APDP	P-Bus data parity test mode control register TAUJ1	APDPTMC_TAUJ1	$0000\ 0000_H$	32	$FFDC\ A108_H$	1	16, 32	√	√	√	√	√	√	√	√	√
APDP	P-Bus data parity error address register TAUJ1	APDPERRADR_TAUJ1	$0000\ 0000_H$	32	$FFDC\ A10C_H$	1	32	√	√	√	√	√	√	√	√	√
APDP	P-Bus data parity status register TAUJ2	APDPERRST_TAUJ2	$0000\ 0000_H$	32	$FFDC\ A110_H$	1	8, 16, 32	√	√	√	√	√	√	√	√	√
APDP	P-Bus data parity status clear register TAUJ2	APDPERRSTC_TAUJ2	$0000\ 0000_H$	32	$FFDC\ A114_H$	1	8, 16, 32	√	√	√	√	√	√	√	√	√
APDP	P-Bus data parity test mode control register TAUJ2	APDPTMC_TAUJ2	$0000\ 0000_H$	32	$FFDC\ A118_H$	1	16, 32	√	√	√	√	√	√	√	√	√

Table A.1 List of Registers (40/124)

Module	Register	Symbol	Value after Reset	Number of Bits	Address	Peripheral IP group	Access Size	Reset Source*1							Access Authority*1	
								POCRES	CVMRES	EXTRES	DBRES	ECMRES	BISTRES	SWRES	SV	UM
APDP	P-Bus data parity error address register TAUJ2	APDPERRADR_TAUJ2	$0000\ 0000_H$	32	$FFDC\ A11C_H$	1	32	√	√	√	√	√	√	√	√	√
APDP	P-Bus data parity status register TSG30	APDPERRST_TSG30	$0000\ 0000_H$	32	$FFDC\ A120_H$	1	8, 16, 32	√	√	√	√	√	√	√	√	√
APDP	P-Bus data parity status clear register TSG30	APDPERRSTC_TSG30	$0000\ 0000_H$	32	$FFDC\ A124_H$	1	8, 16, 32	√	√	√	√	√	√	√	√	√
APDP	P-Bus data parity test mode control register TSG30	APDPTMC_TSG30	$0000\ 0000_H$	32	$FFDC\ A128_H$	1	16, 32	√	√	√	√	√	√	√	√	√
APDP	P-Bus data parity error address register TSG30	APDPERRADR_TSG30	$0000\ 0000_H$	32	$FFDC\ A12C_H$	1	32	√	√	√	√	√	√	√	√	√
APDP	P-Bus data parity status register TSG31	APDPERRST_TSG31	$0000\ 0000_H$	32	$FFDC\ A130_H$	1	8, 16, 32	√	√	√	√	√	√	√	√	√
APDP	P-Bus data parity status clear register TSG31	APDPERRSTC_TSG31	$0000\ 0000_H$	32	$FFDC\ A134_H$	1	8, 16, 32	√	√	√	√	√	√	√	√	√
APDP	P-Bus data parity test mode control register TSG31	APDPTMC_TSG31	$0000\ 0000_H$	32	$FFDC\ A138_H$	1	16, 32	√	√	√	√	√	√	√	√	√
APDP	P-Bus data parity error address register TSG31	APDPERRADR_TSG31	$0000\ 0000_H$	32	$FFDC\ A13C_H$	1	32	√	√	√	√	√	√	√	√	√
APDP	P-Bus data parity status register OSTM_CLKSEL	APDPERRST_OSTM_CLKSEL	$0000\ 0000_H$	32	$FFDC\ A140_H$	1	8, 16, 32	√	√	√	√	√	√	√	√	√
APDP	P-Bus data parity status clear register OSTM_CLKSEL	APDPERRSTC_OSTM_CLKSEL	$0000\ 0000_H$	32	$FFDC\ A144_H$	1	8, 16, 32	√	√	√	√	√	√	√	√	√
APDP	P-Bus data parity test mode control register OSTM_CLKSEL	APDPTMC_OSTM_CLKSEL	$0000\ 0000_H$	32	$FFDC\ A148_H$	1	16, 32	√	√	√	√	√	√	√	√	√
APDP	P-Bus data parity error address register OSTM_CLKSEL	APDPERRADR_OSTM_CLKSEL	$0000\ 0000_H$	32	$FFDC\ A14C_H$	1	32	√	√	√	√	√	√	√	√	√
PIC1A	Simultaneous start trigger control register	PIC1ASST	00_H	8	$FFDD\ 0004_H$	1	8	√	√	√	√	√	√	√	√	√
PIC1A	Simultaneous start control register 0	PIC1ASSER0	0000_H	16	$FFDD\ 0010_H$	1	16	√	√	√	√	√	√	√	√	√
PIC1A	Simultaneous start control register 1	PIC1ASSER1	0000_H	16	$FFDD\ 0014_H$	1	16	√	√	√	√	√	√	√	√	√
PIC1A	Simultaneous start control register 2	PIC1ASSER2	0000_H	16	$FFDD\ 0018_H$	1	16	√	√	√	√	√	√	√	√	√
PIC1A	Simultaneous start control register 3	PIC1ASSER3	0000_H	16	$FFDD\ 001C_H$	1	16	√	√	√	√	√	√	√	√	√
PIC1A	RS flip-flop circuit initialization register 00	PIC1AINI00	00_H	8	$FFDD\ 0020_H$	1	8	√	√	√	√	√	√	√	√	√
PIC1A	DT initialization register 01	PIC1AINI01	00_H	8	$FFDD\ 0024_H$	1	8	√	√	√	√	√	√	√	√	√
PIC1A	RS flip-flop circuit initialization register 10	PIC1AINI10	00_H	8	$FFDD\ 002C_H$	1	8	√	√	√	√	√	√	√	√	√
PIC1A	DT initialization register 11	PIC1AINI11	00_H	8	$FFDD\ 0030_H$	1	8	√	√	√	√	√	√	√	√	√
PIC1A	Hall sensor input select register	PIC1ATSGHALLSEL	00_H	8	$FFDD\ 0074_H$	1	8	√	√	√	√	√	√	√	√	√
PIC1A	TAUD0 input select register	PIC1ATAUD0SEL	$0000\ 0000_H$	32	$FFDD\ 0078_H$	1	32	√	√	√	√	√	√	√	√	√
PIC1A	TAUD1 input select register	PIC1ATAUD1SEL	$0000\ 0000_H$	32	$FFDD\ 007C_H$	1	32	√	√	√	√	√	√	√	√	√
PIC1A	Hi-Z control register 0	PIC1AHIZCEN0	00_H	8	$FFDD\ 0080_H$	1	8	√	√	√	√	√	√	√	√	√
PIC1A	Hi-Z control register 1	PIC1AHIZCEN1	00_H	8	$FFDD\ 0084_H$	1	8	√	√	√	√	√	√	√	√	√
PIC1A	Hi-Z control register 2	PIC1AHIZCEN2	00_H	8	$FFDD\ 0088_H$	1	8	√	√	√	√	√	√	√	√	√
PIC1A	Hi-Z control register 3	PIC1AHIZCEN3	00_H	8	$FFDD\ 008C_H$	1	8	√	√	√	√	√	√	√	√	√
PIC1A	ENCATIN1 input select register 400	PIC1AENCSEL400	00_H	8	$FFDD\ 00B8_H$	1	8	√	√	√	√	√	√	√	√	√
PIC1A	ENCATIN1 input select register 410	PIC1AENCSEL410	00_H	8	$FFDD\ 00BC_H$	1	8	√	√	√	√	√	√	√	√	√
PIC1A	Timer input/output control register 200	PIC1AREG200	$0000\ 0000_H$	32	$FFDD\ 00C0_H$	1	32	√	√	√	√	√	√	√	√	√
PIC1A	Timer input/output control register 201	PIC1AREG201	$0000\ 0000_H$	32	$FFDD\ 00C4_H$	1	32	√	√	√	√	√	√	√	√	√
PIC1A	Timer input/output control register 202	PIC1AREG202	$0000\ 0000_H$	32	$FFDD\ 00C8_H$	1	32	√	√	√	√	√	√	√	√	√
PIC1A	Timer input/output control register 203	PIC1AREG203	$0000\ 0000_H$	32	$FFDD\ 00CC_H$	1	32	√	√	√	√	√	√	√	√	√
PIC1A	Timer input/output control register 210	PIC1AREG210	$0000\ 0000_H$	32	$FFDD\ 00D4_H$	1	32	√	√	√	√	√	√	√	√	√
PIC1A	Timer input/output control register 211	PIC1AREG211	$0000\ 0000_H$	32	$FFDD\ 00D8_H$	1	32	√	√	√	√	√	√	√	√	√
PIC1A	Timer input/output control register 212	PIC1AREG212	$0000\ 0000_H$	32	$FFDD\ 00DC_H$	1	32	√	√	√	√	√	√	√	√	√
PIC1A	Timer input/output control register 213	PIC1AREG213	$0000\ 0000_H$	32	$FFDD\ 00E0_H$	1	32	√	√	√	√	√	√	√	√	√
PIC1A	Timer input/output control register 30	PIC1AREG30	$0000\ 0000_H$	32	$FFDD\ 00E8_H$	1	32	√	√	√	√	√	√	√	√	√
PIC1A	Timer input/output control register 31	PIC1AREG31	$0000\ 0000_H$	32	$FFDD\ 00EC_H$	1	32	√	√	√	√	√	√	√	√	√
PIC1A	Timer input/output control register 50	PIC1AREG50	0000_H	16	$FFDD\ 00F8_H$	1	16	√	√	√	√	√	√	√	√	√
PIC1A	Timer input/output control register 51	PIC1AREG51	0000_H	16	$FFDD\ 00FC_H$	1	16	√	√	√	√	√	√	√	√	√
PIC2B	A/D converter 0 trigger select control register 0	PIC2BADCD0TSEL0	$0000\ 0000_H$	32	$FFDD\ 1000_H$	1	32	√	√	√	√	√	√	√	√	√
PIC2B	A/D converter 0 trigger select control register 1	PIC2BADCD0TSEL1	$0000\ 0000_H$	32	$FFDD\ 1004_H$	1	32	√	√	√	√	√	√	√	√	√
PIC2B	A/D converter 0 trigger select control register 2	PIC2BADCD0TSEL2	$0000\ 0000_H$	32	$FFDD\ 1008_H$	1	32	√	√	√	√	√	√	√	√	√
PIC2B	A/D converter 0 trigger select control register 3	PIC2BADCD0TSEL3	$0000\ 0000_H$	32	$FFDD\ 100C_H$	1	32	√	√	√	√	√	√	√	√	√
PIC2B	A/D converter 0 trigger select control register 4	PIC2BADCD0TSEL4	$0000\ 0000_H$	32	$FFDD\ 1010_H$	1	32	√	√	√	√	√	√	√	√	√
PIC2B	A/D converter 0 trigger edge select control register	PIC2BADCD0EDGSEL	0000_H	16	$FFDD\ 101C_H$	1	16	√	√	√	√	√	√	√	√	√
PIC2B	A/D converter 1 trigger select control register 0	PIC2BADCD1TSEL0	$0000\ 0000_H$	32	$FFDD\ 1020_H$	1	32	√	√	√	√	√	√	√	√	√
PIC2B	A/D converter 1 trigger select control register 1	PIC2BADCD1TSEL1	$0000\ 0000_H$	32	$FFDD\ 1024_H$	1	32	√	√	√	√	√	√	√	√	√

Table A.1 List of Registers (41/124)

Module	Register	Symbol	Value after Reset	Number of Bits	Address	Peripheral IP group	Access Size	Reset Source*1							Access Authority*1	
								POCRES	CVMRES	EXTRES	DBRES	ECMRES	BISTRES	SWRES	SV	UM
PIC2B	A/D converter 1 trigger select control register 2	PIC2BADCD1TSEL2	$0000\ 0000_H$	32	$FFDD\ 1028_H$	1	32	√	√	√	√	√	√	√	√	√
PIC2B	A/D converter 1 trigger select control register 3	PIC2BADCD1TSEL3	$0000\ 0000_H$	32	$FFDD\ 102C_H$	1	32	√	√	√	√	√	√	√	√	√
PIC2B	A/D converter 1 trigger select control register 4	PIC2BADCD1TSEL4	$0000\ 0000_H$	32	$FFDD\ 1030_H$	1	32	√	√	√	√	√	√	√	√	√
PIC2B	A/D converter 1 trigger edge select control register	PIC2BADCD1EDGSEL	0000_H	16	$FFDD\ 103C_H$	1	16	√	√	√	√	√	√	√	√	√
PIC2B	A/D converter trigger output control register 400	PIC2BADTEN400	0000_H	16	$FFDD\ 1040_H$	1	16	√	√	√	√	√	√	√	√	√
PIC2B	A/D converter trigger output control register 401	PIC2BADTEN401	0000_H	16	$FFDD\ 1044_H$	1	16	√	√	√	√	√	√	√	√	√
PIC2B	A/D converter trigger output control register 402	PIC2BADTEN402	0000_H	16	$FFDD\ 1048_H$	1	16	√	√	√	√	√	√	√	√	√
PIC2B	A/D converter trigger output control register 403	PIC2BADTEN403	0000_H	16	$FFDD\ 104C_H$	1	16	√	√	√	√	√	√	√	√	√
PIC2B	A/D converter trigger output control register 404	PIC2BADTEN404	0000_H	16	$FFDD\ 1050_H$	1	16	√	√	√	√	√	√	√	√	√
PIC2B	A/D converter trigger output control register 410	PIC2BADTEN410	0000_H	16	$FFDD\ 1060_H$	1	16	√	√	√	√	√	√	√	√	√
PIC2B	A/D converter trigger output control register 411	PIC2BADTEN411	0000_H	16	$FFDD\ 1064_H$	1	16	√	√	√	√	√	√	√	√	√
PIC2B	A/D converter trigger output control register 412	PIC2BADTEN412	0000_H	16	$FFDD\ 1068_H$	1	16	√	√	√	√	√	√	√	√	√
PIC2B	A/D converter trigger output control register 413	PIC2BADTEN413	0000_H	16	$FFDD\ 106C_H$	1	16	√	√	√	√	√	√	√	√	√
PIC2B	A/D converter trigger output control register 414	PIC2BADTEN414	0000_H	16	$FFDD\ 1070_H$	1	16	√	√	√	√	√	√	√	√	√
PIC1A	Synchronous clear enable register	SELBSSER	00_H	8	$FFDD\ 2000_H$	1	8	√	√	√	√	√	√	√	√	√
OSTM	OSTM0 clock select register	IC0CKSEL0	0000_H	16	$FFDD\ 6000_H$	1	16	√	√	√	√	√	√	√	√	√
OSTM	OSTM1 clock select register	IC0CKSEL1	0000_H	16	$FFDD\ 6004_H$	1	16	√	√	√	√	√	√	√	√	√
PIC1A	Port input monitor select register	PIMONSEL	00_H	8	$FFDD\ 7000_H$	1	8	√	√	√	√	√	√	√	√	√
PIC1A	Port output monitor select register	POMONSEL	00_H	8	$FFDD\ 7400_H$	1	8	√	√	√	√	√	√	√	√	√
OSTM0	OSTM0 compare register	OSTM0CMP	$0000\ 0000_H$	32	$FFDD\ 8000_H$	1	32	√	√	√	√	√	√	√	√	√
OSTM0	OSTM0 compare register	OSTM0CNT	$FFFF\ FFFF_H$	32	$FFDD\ 8004_H$	1	32	√	√	√	√	√	√	√	√	√
OSTM0	OSTM0 output register	OSTM0TO	00_H	8	$FFDD\ 8008_H$	1	8	√	√	√	√	√	√	√	√	√
OSTM0	OSTM0 output enable register	OSTM0TOE	00_H	8	$FFDD\ 800C_H$	1	8	√	√	√	√	√	√	√	√	√
OSTM0	OSTM0 count enable status register	OSTM0TE	00_H	8	$FFDD\ 8010_H$	1	8	√	√	√	√	√	√	√	√	√
OSTM0	OSTM0 count start trigger register	OSTM0TS	00_H	8	$FFDD\ 8014_H$	1	8	√	√	√	√	√	√	√	√	√
OSTM0	OSTM0 count stop trigger register	OSTM0TT	00_H	8	$FFDD\ 8018_H$	1	8	√	√	√	√	√	√	√	√	√
OSTM0	OSTM0 control register	OSTM0CTL	00_H	8	$FFDD\ 8020_H$	1	8	√	√	√	√	√	√	√	√	√
OSTM1	OSTM1 compare register	OSTM1CMP	$0000\ 0000_H$	32	$FFDD\ 9000_H$	1	32	√	√	√	√	√	√	√	√	√
OSTM1	OSTM1 counter register	OSTM1CNT	$FFFF\ FFFF_H$	32	$FFDD\ 9004_H$	1	32	√	√	√	√	√	√	√	√	√
OSTM1	OSTM1 output register	OSTM1TO	00_H	8	$FFDD\ 9008_H$	1	8	√	√	√	√	√	√	√	√	√
OSTM1	OSTM1 output enable register	OSTM1TOE	00_H	8	$FFDD\ 900C_H$	1	8	√	√	√	√	√	√	√	√	√
OSTM1	OSTM1 count enable status register	OSTM1TE	00_H	8	$FFDD\ 9010_H$	1	8	√	√	√	√	√	√	√	√	√
OSTM1	OSTM1 count start trigger register	OSTM1TS	00_H	8	$FFDD\ 9014_H$	1	8	√	√	√	√	√	√	√	√	√
OSTM1	OSTM1 count stop trigger register	OSTM1TT	00_H	8	$FFDD\ 9018_H$	1	8	√	√	√	√	√	√	√	√	√
OSTM1	OSTM1 control register	OSTM1CTL	00_H	8	$FFDD\ 9020_H$	1	8	√	√	√	√	√	√	√	√	√
PBG	PBG1A protection register 0	FSGD1ADPROT0	$07FF\ FFFF_H$	32	$FFDD\ D000_H$	1	8, 16, 32	√	√	√	√	√	√	√	√	√
PBG	PBG1A protection register 1	FSGD1ADPROT1	$07FF\ FFFF_H$	32	$FFDD\ D004_H$	1	8, 16, 32	√	√	√	√	√	√	√	√	√
PBG	PBG1A protection register 2	FSGD1ADPROT2	$07FF\ FFFF_H$	32	$FFDD\ D008_H$	1	8, 16, 32	√	√	√	√	√	√	√	√	√
PBG	PBG1A protection register 3	FSGD1ADPROT3	$07FF\ FFFF_H$	32	$FFDD\ D00C_H$	1	8, 16, 32	√	√	√	√	√	√	√	√	√
PBG	PBG1A protection register 4	FSGD1ADPROT4	$07FF\ FFFF_H$	32	$FFDD\ D010_H$	1	8, 16, 32	√	√	√	√	√	√	√	√	√
PBG	PBG1A protection register 5	FSGD1ADPROT5	$07FF\ FFFF_H$	32	$FFDD\ D014_H$	1	8, 16, 32	√	√	√	√	√	√	√	√	√
PBG	PBG1A protection register 6	FSGD1ADPROT6	$07FF\ FFFF_H$	32	$FFDD\ D018_H$	1	8, 16, 32	√	√	√	√	√	√	√	√	√
PBG	PBG1A protection register 7	FSGD1ADPROT7	$07FF\ FFFF_H$	32	$FFDD\ D01C_H$	1	8, 16, 32	√	√	√	√	√	√	√	√	√
PBG	PBG1A protection register 8	FSGD1ADPROT8	$07FF\ FFFF_H$	32	$FFDD\ D020_H$	1	8, 16, 32	√	√	√	√	√	√	√	√	√
PBG	PBG1A protection register 9	FSGD1ADPROT9	$07FF\ FFFF_H$	32	$FFDD\ D024_H$	1	8, 16, 32	√	√	√	√	√	√	√	√	√
PBG	PBG1A protection register 10	FSGD1ADPROT10	$07FF\ FFFF_H$	32	$FFDD\ D028_H$	1	8, 16, 32	√	√	√	√	√	√	√	√	√
PBG	PBG1A protection register 11	FSGD1ADPROT11	$07FF\ FFFF_H$	32	$FFDD\ D02C_H$	1	8, 16, 32	√	√	√	√	√	√	√	√	√
PBG	PBG1A protection register 12	FSGD1ADPROT12	$07FF\ FFFF_H$	32	$FFDD\ D030_H$	1	8, 16, 32	√	√	√	√	√	√	√	√	√
PBG	PBG1A protection register 13	FSGD1ADPROT13	$07FF\ FFFF_H$	32	$FFDD\ D034_H$	1	8, 16, 32	√	√	√	√	√	√	√	√	√
PBG	PBG1A protection register 14	FSGD1ADPROT14	$07FF\ FFFF_H$	32	$FFDD\ D038_H$	1	8, 16, 32	√	√	√	√	√	√	√	√	√
PBG	PBG1A error control register	ERRSLV1ACTL	$0000\ 0000_H$	32	$FFDD\ D040_H$	1	8, 16, 32	√	√	√	√	√	√	√	√	√
PBG	PBG1A error status register	ERRSLV1ASTAT	$0000\ 0000_H$	32	$FFDD\ D044_H$	1	8, 16, 32	√	√	√	√	√	√	√	√	√
PBG	PBG1A error address register	ERRSLV1AADDR	$0000\ 0000_H$	32	$FFDD\ D048_H$	1	32	√	√	√	√	√	√	√	√	√

Table A.1 List of Registers (42/124)

Module	Register	Symbol	Value after Reset	Number of Bits	Address	Peripheral IP group	Access Size	Reset Source*1							Access Authority*1	
								POCRES	CVMRES	EXTRES	DBRES	ECMRES	BISTRES	SWRES	SV	UM
PBG	PBG1A error type register	ERRSLV1ATYPE	$0000\ 0000_H$	32	$FFDD\ D04C_H$	1	16, 32	√	√	√	√	√	√	√	√	√
PBG	PBG1B protection register 0	FSGD1BDPROT0	$07FF\ FFFF_H$	32	$FFDD\ D080_H$	1	8, 16, 32	√	√	√	√	√	√	√	√	√
PBG	PBG1B protection register 1	FSGD1BDPROT1	$07FF\ FFFF_H$	32	$FFDD\ D084_H$	1	8, 16, 32	√	√	√	√	√	√	√	√	√
PBG	PBG1B protection register 2	FSGD1BDPROT2	$07FF\ FFFF_H$	32	$FFDD\ D088_H$	1	8, 16, 32	√	√	√	√	√	√	√	√	√
PBG	PBG1B protection register 3	FSGD1BDPROT3	$07FF\ FFFF_H$	32	$FFDD\ D08C_H$	1	8, 16, 32	√	√	√	√	√	√	√	√	√
PBG	PBG1B protection register 4	FSGD1BDPROT4	$07FF\ FFFF_H$	32	$FFDD\ D090_H$	1	8, 16, 32	√	√	√	√	√	√	√	√	√
PBG	PBG1B protection register 5	FSGD1BDPROT5	$07FF\ FFFF_H$	32	$FFDD\ D094_H$	1	8, 16, 32	√	√	√	√	√	√	√	√	√
PBG	PBG1B protection register 6	FSGD1BDPROT6	$07FF\ FFFF_H$	32	$FFDD\ D098_H$	1	8, 16, 32	√	√	√	√	√	√	√	√	√
PBG	PBG1B protection register 7	FSGD1BDPROT7	$07FF\ FFFF_H$	32	$FFDD\ D09C_H$	1	8, 16, 32	√	√	√	√	√	√	√	√	√
PBG	PBG1B protection register 8	FSGD1BDPROT8	$07FF\ FFFF_H$	32	$FFDD\ D0A0_H$	1	8, 16, 32	√	√	√	√	√	√	√	√	√
PBG	PBG1B protection register 9	FSGD1BDPROT9	$07FF\ FFFF_H$	32	$FFDD\ D0A4_H$	1	8, 16, 32	√	√	√	√	√	√	√	√	√
PBG	PBG1B protection register 10	FSGD1BDPROT10	$07FF\ FFFF_H$	32	$FFDD\ D0A8_H$	1	8, 16, 32	√	√	√	√	√	√	√	√	√
PBG	PBG1B protection register 11	FSGD1BDPROT11	$07FF\ FFFF_H$	32	$FFDD\ D0AC_H$	1	8, 16, 32	√	√	√	√	√	√	√	√	√
PBG	PBG1B protection register 12	FSGD1BDPROT12	$07FF\ FFFF_H$	32	$FFDD\ D0B0_H$	1	8, 16, 32	√	√	√	√	√	√	√	√	√
PBG	PBG1B protection register 13	FSGD1BDPROT13	$07FF\ FFFF_H$	32	$FFDD\ D0B4_H$	1	8, 16, 32	√	√	√	√	√	√	√	√	√
PBG	PBG1B protection register 14	FSGD1BDPROT14	$07FF\ FFFF_H$	32	$FFDD\ D0B8_H$	1	8, 16, 32	√	√	√	√	√	√	√	√	√
PBG	PBG1B error control register	ERRSLV1BCTL	$0000\ 0000_H$	32	$FFDD\ D0C0_H$	1	8, 16, 32	√	√	√	√	√	√	√	√	√
PBG	PBG1B error status register	ERRSLV1BSTAT	$0000\ 0000_H$	32	$FFDD\ D0C4_H$	1	8, 16, 32	√	√	√	√	√	√	√	√	√
PBG	PBG1B error address register	ERRSLV1BADDR	$0000\ 0000_H$	32	$FFDD\ D0C8_H$	1	32	√	√	√	√	√	√	√	√	√
PBG	PBG1B error type register	ERRSLV1BTYPE	$0000\ 0000_H$	32	$FFDD\ D0CC_H$	1	16, 32	√	√	√	√	√	√	√	√	√
SCI30	Serial mode register	SCI30SMR	00_H	8	$FFDF\ 0000_H$	1	8	√	√	√	√	√	√	√	√	√
SCI30	Bit rate register	SCI30BRR	FF_H	8	$FFDF\ 0004_H$	1	8	√	√	√	√	√	√	√	√	√
SCI30	Modulation duty register	SCI30MDDR	FF_H	8	$FFDF\ 0004_H$	1	8	√	√	√	√	√	√	√	√	√
SCI30	Serial control register	SCI30SCR	00_H	8	$FFDF\ 0008_H$	1	8	√	√	√	√	√	√	√	√	√
SCI30	Transmit data register	SCI30TDR	FF_H	8	$FFDF\ 000C_H$	1	8	√	√	√	√	√	√	√	√	√
SCI30	Serial status register	SCI30SSR	84_H	8	$FFDF\ 0010_H$	1	8	√	√	√	√	√	√	√	√	√
SCI30	Receive data register	SCI30RDR	00_H	8	$FFDF\ 0014_H$	1	8	√	√	√	√	√	√	√	√	√
SCI30	Serial transfer format register	SCI30SCMR	$F2_H$	8	$FFDF\ 0018_H$	1	8	√	√	√	√	√	√	√	√	√
SCI30	Serial extended mode register	SCI30SEMR	04_H	8	$FFDF\ 001C_H$	1	8	√	√	√	√	√	√	√	√	√
SCI31	Serial mode register	SCI31SMR	00_H	8	$FFDF\ 1000_H$	1	8	√	√	√	√	√	√	√	√	√
SCI31	Bit rate register	SCI31BRR	FF_H	8	$FFDF\ 1004_H$	1	8	√	√	√	√	√	√	√	√	√
SCI31	Modulation duty register	SCI31MDDR	FF_H	8	$FFDF\ 1004_H$	1	8	√	√	√	√	√	√	√	√	√
SCI31	Serial control register	SCI31SCR	00_H	8	$FFDF\ 1008_H$	1	8	√	√	√	√	√	√	√	√	√
SCI31	Transmit data register	SCI31TDR	FF_H	8	$FFDF\ 100C_H$	1	8	√	√	√	√	√	√	√	√	√
SCI31	Serial status register	SCI31SSR	84_H	8	$FFDF\ 1010_H$	1	8	√	√	√	√	√	√	√	√	√
SCI31	Receive data register	SCI31RDR	00_H	8	$FFDF\ 1014_H$	1	8	√	√	√	√	√	√	√	√	√
SCI31	Serial transfer format register	SCI31SCMR	$F2_H$	8	$FFDF\ 1018_H$	1	8	√	√	√	√	√	√	√	√	√
SCI31	Serial extended mode register	SCI31SEMR	04_H	8	$FFDF\ 101C_H$	1	8	√	√	√	√	√	√	√	√	√
SCI32	Serial mode register	SCI32SMR	00_H	8	$FFDF\ 2000_H$	1	8	√	√	√	√	√	√	√	√	√
SCI32	Bit rate register	SCI32BRR	FF_H	8	$FFDF\ 2004_H$	1	8	√	√	√	√	√	√	√	√	√
SCI32	Modulation duty register	SCI32MDDR	FF_H	8	$FFDF\ 2004_H$	1	8	√	√	√	√	√	√	√	√	√
SCI32	Serial control register	SCI32SCR	00_H	8	$FFDF\ 2008_H$	1	8	√	√	√	√	√	√	√	√	√
SCI32	Transmit data register	SCI32TDR	FF_H	8	$FFDF\ 200C_H$	1	8	√	√	√	√	√	√	√	√	√
SCI32	Serial status register	SCI32SSR	84_H	8	$FFDF\ 2010_H$	1	8	√	√	√	√	√	√	√	√	√
SCI32	Receive data register	SCI32RDR	00_H	8	$FFDF\ 2014_H$	1	8	√	√	√	√	√	√	√	√	√
SCI32	Serial transfer format register	SCI32SCMR	$F2_H$	8	$FFDF\ 2018_H$	1	8	√	√	√	√	√	√	√	√	√
SCI32	Serial extended mode register	SCI32SEMR	04_H	8	$FFDF\ 201C_H$	1	8	√	√	√	√	√	√	√	√	√
RLN30	LIN wake-up baud rate selector register	RLN30LWBR	00_H	8	$FFDF\ 8001_H$	1	8	√	√	√	√	√	√	√	√	√
RLN30	LIN/ UART baud rate prescaler 01 register	RLN30LBRP01	0000_H	16	$FFDF\ 8002_H$	1	16	√	√	√	√	√	√	√	√	√
RLN30	LIN/ UART baud rate prescaler 0 register	RLN30LBRP0	00_H	8	$FFDF\ 8002_H$	1	8	√	√	√	√	√	√	√	√	√
RLN30	LIN/ UART baud rate prescaler 1 register	RLN30LBRP1	00_H	8	$FFDF\ 8003_H$	1	8	√	√	√	√	√	√	√	√	√
RLN30	LIN self-test control register	RLN30LSTC	00_H	8	$FFDF\ 8004_H$	1	8	√	√	√	√	√	√	√	√	√
RLN30	LIN/ UART mode register	RLN30LMD	00_H	8	$FFDF\ 8008_H$	1	8	√	√	√	√	√	√	√	√	√

Table A.1 List of Registers (43/124)

Module	Register	Symbol	Value after Reset	Number of Bits	Address	Peripheral IP group	Access Size	Reset Source*1							Access Authority*1	
								POCRES	CVMRES	EXTRES	DBRES	ECMRES	BISTRES	SWRES	SV	UM
RLN30	LIN break field configuration register/ UART configuration register	RLN30LBFC	00_H	8	$FFDF\ 8009_H$	1	8	√	√	√	√	√	√	√	√	√
RLN30	LIN / UART space configuration register	RLN30LSC	00_H	8	$FFDF\ 800A_H$	1	8	√	√	√	√	√	√	√	√	√
RLN30	LIN wake-up configuration register	RLN30LWUP	00_H	8	$FFDF\ 800B_H$	1	8	√	√	√	√	√	√	√	√	√
RLN30	LIN interrupt enable register	RLN30LIE	00_H	8	$FFDF\ 800C_H$	1	8	√	√	√	√	√	√	√	√	√
RLN30	LIN / UART error detection enable register	RLN30LEDE	00_H	8	$FFDF\ 800D_H$	1	8	√	√	√	√	√	√	√	√	√
RLN30	LIN/ UART control register	RLN30LCUC	00_H	8	$FFDF\ 800E_H$	1	8	√	√	√	√	√	√	√	√	√
RLN30	LIN / UART transmission control register	RLN30LTRC	00_H	8	$FFDF\ 8010_H$	1	8	√	√	√	√	√	√	√	√	√
RLN30	LIN/ UART mode status register	RLN30LMST	00_H	8	$FFDF\ 8011_H$	1	8	√	√	√	√	√	√	√	√	√
RLN30	LIN / UART status register	RLN30LST	00_H	8	$FFDF\ 8012_H$	1	8	√	√	√	√	√	√	√	√	√
RLN30	LIN/ UART error status register	RLN30LEST	00_H	8	$FFDF\ 8013_H$	1	8	√	√	√	√	√	√	√	√	√
RLN30	LIN data field configuration register	RLN30LDFC	00_H	8	$FFDF\ 8014_H$	1	8	√	√	√	√	√	√	√	√	√
RLN30	LIN / UART ID buffer register	RLN30LIDB	00_H	8	$FFDF\ 8015_H$	1	8	√	√	√	√	√	√	√	√	√
RLN30	LIN checksum buffer register	RLN30LCBR	00_H	8	$FFDF\ 8016_H$	1	8	√	√	√	√	√	√	√	√	√
RLN30	UART data 0 buffer register	RLN30LUDB0	00_H	8	$FFDF\ 8017_H$	1	8	√	√	√	√	√	√	√	√	√
RLN30	LIN / UART data buffer 1 register	RLN30LDBR1	00_H	8	$FFDF\ 8018_H$	1	8	√	√	√	√	√	√	√	√	√
RLN30	LIN/ UART data buffer 2 register	RLN30LDBR2	00_H	8	$FFDF\ 8019_H$	1	8	√	√	√	√	√	√	√	√	√
RLN30	LIN/ UART data buffer 3 register	RLN30LDBR3	00_H	8	$FFDF\ 801A_H$	1	8	√	√	√	√	√	√	√	√	√
RLN30	LIN / UART data buffer 4 register	RLN30LDBR4	00_H	8	$FFDF\ 801B_H$	1	8	√	√	√	√	√	√	√	√	√
RLN30	LIN / UART data buffer 5 register	RLN30LDBR5	00_H	8	$FFDF\ 801C_H$	1	8	√	√	√	√	√	√	√	√	√
RLN30	LIN / UART data buffer 6 register	RLN30LDBR6	00_H	8	$FFDF\ 801D_H$	1	8	√	√	√	√	√	√	√	√	√
RLN30	LIN / UART data buffer 7 register	RLN30LDBR7	00_H	8	$FFDF\ 801E_H$	1	8	√	√	√	√	√	√	√	√	√
RLN30	LIN/ UART data buffer 8 register	RLN30LDBR8	00_H	8	$FFDF\ 801F_H$	1	8	√	√	√	√	√	√	√	√	√
RLN30	UART operation enable register	RLN30LUOER	00_H	8	$FFDF\ 8020_H$	1	8	√	√	√	√	√	√	√	√	√
RLN30	UART option register 1	RLN30LUOR1	00_H	8	$FFDF\ 8021_H$	1	8	√	√	√	√	√	√	√	√	√
RLN30	UART transmission data register	RLN30LUTDR	0000_H	16	$FFDF\ 8024_H$	1	8, 16	√	√	√	√	√	√	√	√	√
RLN30	UART reception data register	RLN30LURDR	0000_H	16	$FFDF\ 8026_H$	1	8, 16	√	√	√	√	√	√	√	√	√
RLN30	UART wait transmission data register	RLN30LUWTDR	0000_H	16	$FFDF\ 8028_H$	1	8, 16	√	√	√	√	√	√	√	√	√
RLN31	LIN wake-up baud rate selector register	RLN31LWBR	00_H	8	$FFDF\ 9001_H$	1	8	√	√	√	√	√	√	√	√	√
RLN31	LIN/ UART baud rate prescaler 01 register	RLN31LBRP01	0000_H	16	$FFDF\ 9002_H$	1	16	√	√	√	√	√	√	√	√	√
RLN31	LIN/ UART baud rate prescaler 0 register	RLN31LBRP0	00_H	8	$FFDF\ 9002_H$	1	8	√	√	√	√	√	√	√	√	√
RLN31	LIN/ UART baud rate prescaler 1 register	RLN31LBRP1	00_H	8	$FFDF\ 9003_H$	1	8	√	√	√	√	√	√	√	√	√
RLN31	LIN self-test control register	RLN31LSTC	00_H	8	$FFDF\ 9004_H$	1	8	√	√	√	√	√	√	√	√	√
RLN31	LIN/ UART mode register	RLN31LMD	00_H	8	$FFDF\ 9008_H$	1	8	√	√	√	√	√	√	√	√	√
RLN31	LIN break field configuration register/ UART configuration register	RLN31LBFC	00_H	8	$FFDF\ 9009_H$	1	8	√	√	√	√	√	√	√	√	√
RLN31	LIN / UART space configuration register	RLN31LSC	00_H	8	$FFDF\ 900A_H$	1	8	√	√	√	√	√	√	√	√	√
RLN31	LIN wake-up configuration register	RLN31LWUP	00_H	8	$FFDF\ 900B_H$	1	8	√	√	√	√	√	√	√	√	√
RLN31	LIN interrupt enable register	RLN31LIE	00_H	8	$FFDF\ 900C_H$	1	8	√	√	√	√	√	√	√	√	√
RLN31	LIN / UART error detection enable register	RLN31LEDE	00_H	8	$FFDF\ 900D_H$	1	8	√	√	√	√	√	√	√	√	√
RLN31	LIN/ UART control register	RLN31LCUC	00_H	8	$FFDF\ 900E_H$	1	8	√	√	√	√	√	√	√	√	√
RLN31	LIN / UART transmission control register	RLN31LTRC	00_H	8	$FFDF\ 9010_H$	1	8	√	√	√	√	√	√	√	√	√
RLN31	LIN/ UART mode status register	RLN31LMST	00_H	8	$FFDF\ 9011_H$	1	8	√	√	√	√	√	√	√	√	√
RLN31	LIN / UART status register	RLN31LST	00_H	8	$FFDF\ 9012_H$	1	8	√	√	√	√	√	√	√	√	√
RLN31	LIN/ UART error status register	RLN31LEST	00_H	8	$FFDF\ 9013_H$	1	8	√	√	√	√	√	√	√	√	√
RLN31	LIN data field configuration register	RLN31LDFC	00_H	8	$FFDF\ 9014_H$	1	8	√	√	√	√	√	√	√	√	√
RLN31	LIN / UART ID buffer register	RLN31LIDB	00_H	8	$FFDF\ 9015_H$	1	8	√	√	√	√	√	√	√	√	√
RLN31	LIN checksum buffer register	RLN31LCBR	00_H	8	$FFDF\ 9016_H$	1	8	√	√	√	√	√	√	√	√	√
RLN31	UART data 0 buffer register	RLN31LUDB0	00_H	8	$FFDF\ 9017_H$	1	8	√	√	√	√	√	√	√	√	√
RLN31	LIN / UART data buffer 1 register	RLN31LDBR1	00_H	8	$FFDF\ 9018_H$	1	8	√	√	√	√	√	√	√	√	√
RLN31	LIN/ UART data buffer 2 register	RLN31LDBR2	00_H	8	$FFDF\ 9019_H$	1	8	√	√	√	√	√	√	√	√	√
RLN31	LIN/ UART data buffer 3 register	RLN31LDBR3	00_H	8	$FFDF\ 901A_H$	1	8	√	√	√	√	√	√	√	√	√
RLN31	LIN / UART data buffer 4 register	RLN31LDBR4	00_H	8	$FFDF\ 901B_H$	1	8	√	√	√	√	√	√	√	√	√
RLN31	LIN / UART data buffer 5 register	RLN31LDBR5	00_H	8	$FFDF\ 901C_H$	1	8	√	√	√	√	√	√	√	√	√

Table A.1 List of Registers (44/124)

Module	Register	Symbol	Value after Reset	Number of Bits	Address	Peripheral IP group	Access Size	Reset Source*1							Access Authority*1	
								POCRES	CVMRES	EXTRES	DBRES	ECMRES	BISTRES	SWRES	SV	UM
RLN31	LIN / UART data buffer 6 register	RLN31LDBR6	00_H	8	$FFDF\ 901D_H$	1	8	√	√	√	√	√	√	√	√	√
RLN31	LIN / UART data buffer 7 register	RLN31LDBR7	00_H	8	$FFDF\ 901E_H$	1	8	√	√	√	√	√	√	√	√	√
RLN31	LIN/ UART data buffer 8 register	RLN31LDBR8	00_H	8	$FFDF\ 901F_H$	1	8	√	√	√	√	√	√	√	√	√
RLN31	UART operation enable register	RLN31LUOER	00_H	8	$FFDF\ 9020_H$	1	8	√	√	√	√	√	√	√	√	√
RLN31	UART option register 1	RLN31LUOR1	00_H	8	$FFDF\ 9021_H$	1	8	√	√	√	√	√	√	√	√	√
RLN31	UART transmission data register	RLN31LUTDR	0000_H	16	$FFDF\ 9024_H$	1	8, 16	√	√	√	√	√	√	√	√	√
RLN31	UART reception data register	RLN31LURDR	0000_H	16	$FFDF\ 9026_H$	1	8, 16	√	√	√	√	√	√	√	√	√
RLN31	UART wait transmission data register	RLN31LUWTDR	0000_H	16	$FFDF\ 9028_H$	1	8, 16	√	√	√	√	√	√	√	√	√
PSI50	PSI5 channel control register	PSI50CHCTRL	$0000\ 0000_H$	32	$FFE0\ 0000_H$	1	32	√	√	√	√	√	√	√	√	√
PSI50	PSI5 IP timer control register	PSI50IPTIMERCTRL	$0001\ 0000_H$	32	$FFE0\ 0010_H$	1	32	√	√	√	√	√	√	√	√	√
PSI50	PSI5 IP timer counter	PSI50IPTIMER	$0000\ 0000_H$	32	$FFE0\ 0014_H$	1	32	√	√	√	√	√	√	√	√	√
PSI50	PSI5 operating mode/communication mode register	PSI50OPMCOMM	$0000\ 0000_H$	32	$FFE0\ 0020_H$	1	32	√	√	√	√	√	√	√	√	√
PSI50	PSI5 operating-mode bit rate register	PSI50OPMBITRATE	$0000\ 029F_H$	32	$FFE0\ 0024_H$	1	32	√	√	√	√	√	√	√	√	√
PSI50	PSI5 operating-mode cycle time register	PSI50OPMCYCT	$0000\ 9C3F_H$	32	$FFE0\ 0028_H$	1	32	√	√	√	√	√	√	√	√	√
PSI50	PSI5 interrupt status register	PSI50PSI5INT	$0000\ 0000_H$	32	$FFE0\ 0030_H$	1	32	√	√	√	√	√	√	√	√	√
PSI50	PSI5 receive data emulation register	PSI50EMRXDATA	$0000\ 0000_H$	32	$FFE0\ 0040_H$	1	32	√	√	√	√	√	√	√	√	√
PSI50	PSI5 receive data status emulation register	PSI50EMRXDST	$0000\ 0000_H$	32	$FFE0\ 0044_H$	1	32	√	√	√	√	√	√	√	√	√
PSI50	PSI5 receive data IP timer emulation register	PSI50EMRXDTIM	$0000\ 0000_H$	32	$FFE0\ 0048_H$	1	32	√	√	√	√	√	√	√	√	√
PSI50	PSI5 receive data FIFO emulation register	PSI50EMRXDFIFO	$0000\ 0000_H$	32	$FFE0\ 004C_H$	1	32	√	√	√	√	√	√	√	√	√
PSI50	PSI5 receive-message receive message emulation register	PSI50EMRXMRXMSG	$0000\ 0000_H$	32	$FFE0\ 0050_H$	1	32	√	√	√	√	√	√	√	√	√
PSI50	PSI5 receive-message channel receive status emulation register	PSI50EMRXMRXST	$0000\ 0000_H$	32	$FFE0\ 0054_H$	1	32	√	√	√	√	√	√	√	√	√
PSI50	PSI5 receive-message receive timestamp emulation register	PSI50EMRXMRXTIM	$0000\ 0000_H$	32	$FFE0\ 0058_H$	1	32	√	√	√	√	√	√	√	√	√
PSI50	PSI5 receive-message channel FIFO emulation register	PSI50EMRXMFIFO	$0000\ 0000_H$	32	$FFE0\ 005C_H$	1	32	√	√	√	√	√	√	√	√	√
PSI50	PSI5 transmission setting register	PSI50TXSETTING	$1067\ 47F7_H$	32	$FFE0\ 0080_H$	1	32	√	√	√	√	√	√	√	√	√
PSI50	PSI5 synchronization control register	PSI50SYNCCTRL	$0000\ 0000_H$	32	$FFE0\ 0084_H$	1	32	√	√	√	√	√	√	√	√	√
PSI50	PSI5 transmission status register	PSI50TXST	$0000\ 0001_H$	32	$FFE0\ 0088_H$	1	32	√	√	√	√	√	√	√	√	√
PSI50	PSI5 transmission status clear register	PSI50TXSTCLR	$0000\ 0000_H$	32	$FFE0\ 008C_H$	1	32	√	√	√	√	√	√	√	√	√
PSI50	PSI5 transmission status interrupt enable register	PSI50TXSTINTEN	$0000\ 0000_H$	32	$FFE0\ 0090_H$	1	32	√	√	√	√	√	√	√	√	√
PSI50	PSI5 transmit data control register	PSI50TXDCTRL	$0000\ 0001_H$	32	$FFE0\ 0094_H$	1	32	√	√	√	√	√	√	√	√	√
PSI50	PSI5 transmit data register	PSI50TXDATA	$0000\ 0000_H$	32	$FFE0\ 0098_H$	1	32	√	√	√	√	√	√	√	√	√
PSI50	PSI5 receive sampling setting register	PSI50RXSPLSET	$0000\ 0027_H$	32	$FFE0\ 0100_H$	1	32	√	√	√	√	√	√	√	√	√
PSI50	PSI5 receive slot 1 setting register	PSI50RXS1SET	$00A0\ 0000_H$	32	$FFE0\ 0108_H$	1	32	√	√	√	√	√	√	√	√	√
PSI50	PSI5 receive slot 2 setting register	PSI50RXS2SET	$00A0\ 0000_H$	32	$FFE0\ 010C_H$	1	32	√	√	√	√	√	√	√	√	√
PSI50	PSI5 receive slot 3 setting register	PSI50RXS3SET	$00A0\ 0000_H$	32	$FFE0\ 0110_H$	1	32	√	√	√	√	√	√	√	√	√
PSI50	PSI5 receive slot 4 setting register	PSI50RXS4SET	$00A0\ 0000_H$	32	$FFE0\ 0114_H$	1	32	√	√	√	√	√	√	√	√	√
PSI50	PSI5 receive slot 5 setting register	PSI50RXS5SET	$00A0\ 0000_H$	32	$FFE0\ 0118_H$	1	32	√	√	√	√	√	√	√	√	√
PSI50	PSI5 receive slot 6 setting register	PSI50RXS6SET	$00A0\ 0000_H$	32	$FFE0\ 011C_H$	1	32	√	√	√	√	√	√	√	√	√
PSI50	PSI5 receive slot 7 setting register	PSI50RXS7SET	$00A0\ 0000_H$	32	$FFE0\ 0120_H$	1	32	√	√	√	√	√	√	√	√	√
PSI50	PSI5 receive slot 8 setting register	PSI50RXS8SET	$00A0\ 0000_H$	32	$FFE0\ 0124_H$	1	32	√	√	√	√	√	√	√	√	√
PSI50	PSI5 receive data register	PSI50RXDATA	$0000\ 0000_H$	32	$FFE0\ 0128_H$	1	32	√	√	√	√	√	√	√	√	√
PSI50	PSI5 receive data status register	PSI50RXDST	$0000\ 0000_H$	32	$FFE0\ 012C_H$	1	32	√	√	√	√	√	√	√	√	√
PSI50	PSI5 receive data IP timer register	PSI50RXDTIM	$0000\ 0000_H$	32	$FFE0\ 0130_H$	1	32	√	√	√	√	√	√	√	√	√
PSI50	PSI5 receive data FIFO register	PSI50RXDFIFO	$0000\ 0000_H$	32	$FFE0\ 0134_H$	1	32	√	√	√	√	√	√	√	√	√
PSI50	PSI5 receive module status register	PSI50RXMODST	$0000\ 0000_H$	32	$FFE0\ 0138_H$	1	32	√	√	√	√	√	√	√	√	√
PSI50	PSI5 receive module status clear register	PSI50RXMODSTCLR	$0000\ 0000_H$	32	$FFE0\ 013C_H$	1	32	√	√	√	√	√	√	√	√	√
PSI50	PSI5 receive module status interrupt enable register	PSI50RXMODSTINTEN	$0000\ 0000_H$	32	$FFE0\ 0140_H$	1	32	√	√	√	√	√	√	√	√	√
PSI50	PSI5 receive message channel setting register	PSI50RXMSET	$0000\ 0000_H$	32	$FFE0\ 0180_H$	1	32	√	√	√	√	√	√	√	√	√
PSI50	PSI5 receive-message receive message register	PSI50RXMRXMSG	$0000\ 0000_H$	32	$FFE0\ 0184_H$	1	32	√	√	√	√	√	√	√	√	√
PSI50	PSI5 receive-message channel receive status register	PSI50RXMRXST	$0000\ 0000_H$	32	$FFE0\ 0188_H$	1	32	√	√	√	√	√	√	√	√	√
PSI50	PSI5 receive-message channel receive timestamp register	PSI50RXMRXTIM	$0000\ 0000_H$	32	$FFE0\ 018C_H$	1	32	√	√	√	√	√	√	√	√	√
PSI50	PSI5 receive-message channel FIFO register	PSI50RXMFIFO	$0000\ 0000_H$	32	$FFE0\ 0190_H$	1	32	√	√	√	√	√	√	√	√	√
PSI50	PSI5 receive-message channel module status register	PSI50RXMMST	$0000\ 0000_H$	32	$FFE0\ 0194_H$	1	32	√	√	√	√	√	√	√	√	√

Table A.1 List of Registers (45/124)

Module	Register	Symbol	Value after Reset	Number of Bits	Address	Peripheral IP group	Access Size	Reset Source*1							Access Authority*1	
								POCRES	CVMRES	EXTRES	DBRES	ECMRES	BISTRES	SWRES	SV	UM
PSI50	PSI5 receive-message channel module status clear register	PSI50RXMMSTCLR	0000 0000H	32	FFE0 0198H	1	32	√	√	√	√	√	√	√	√	√
PSI50	PSI5 receive-message channel module status interrupt enable register	PSI50RXMMSTINTEN	0000 0000H	32	FFE0 019CH	1	32	√	√	√	√	√	√	√	√	√
PSI51	PSI5 channel control register	PSI51CHCTRL	0000 0000H	32	FFE0 1000H	1	32	√	√	√	√	√	√	√	√	√
PSI51	PSI5 IP timer control register	PSI51IPTIMERCTRL	0001 0000H	32	FFE0 1010H	1	32	√	√	√	√	√	√	√	√	√
PSI51	PSI5 IP timer counter	PSI51IPTIMER	0000 0000H	32	FFE0 1014H	1	32	√	√	√	√	√	√	√	√	√
PSI51	PSI5 operating mode/communication mode register	PSI51OPMCOMM	0000 0000H	32	FFE0 1020H	1	32	√	√	√	√	√	√	√	√	√
PSI51	PSI5 operating-mode bit rate register	PSI51OPMBITRATE	0000 029FH	32	FFE0 1024H	1	32	√	√	√	√	√	√	√	√	√
PSI51	PSI5 operating-mode cycle time register	PSI51OPMCYCT	0000 9C3FH	32	FFE0 1028H	1	32	√	√	√	√	√	√	√	√	√
PSI51	PSI5 interrupt status register	PSI51PSI5INT	0000 0000H	32	FFE0 1030H	1	32	√	√	√	√	√	√	√	√	√
PSI51	PSI5 receive data emulation register	PSI51EMRXDATA	0000 0000H	32	FFE0 1040H	1	32	√	√	√	√	√	√	√	√	√
PSI51	PSI5 receive data status emulation register	PSI51EMRXDST	0000 0000H	32	FFE0 1044H	1	32	√	√	√	√	√	√	√	√	√
PSI51	PSI5 receive data IP timer emulation register	PSI51EMRXDTIM	0000 0000H	32	FFE0 1048H	1	32	√	√	√	√	√	√	√	√	√
PSI51	PSI5 receive data FIFO emulation register	PSI51EMRXDFIFO	0000 0000H	32	FFE0 104CH	1	32	√	√	√	√	√	√	√	√	√
PSI51	PSI5 receive-message receive message emulation register	PSI51EMRXMRXMSG	0000 0000H	32	FFE0 1050H	1	32	√	√	√	√	√	√	√	√	√
PSI51	PSI5 receive-message channel receive status emulation register	PSI51EMRXMRXST	0000 0000H	32	FFE0 1054H	1	32	√	√	√	√	√	√	√	√	√
PSI51	PSI5 receive-message receive timestamp emulation register	PSI51EMRXMRXTIM	0000 0000H	32	FFE0 1058H	1	32	√	√	√	√	√	√	√	√	√
PSI51	PSI5 receive-message channel FIFO emulation register	PSI51EMRXMFIFO	0000 0000H	32	FFE0 105CH	1	32	√	√	√	√	√	√	√	√	√
PSI51	PSI5 transmission setting register	PSI51TXSETTING	1067 47F7H	32	FFE0 1080H	1	32	√	√	√	√	√	√	√	√	√
PSI51	PSI5 synchronization control register	PSI51SYNCCTRL	0000 0000H	32	FFE0 1084H	1	32	√	√	√	√	√	√	√	√	√
PSI51	PSI5 transmission status register	PSI51TXST	0000 0001H	32	FFE0 1088H	1	32	√	√	√	√	√	√	√	√	√
PSI51	PSI5 transmission status clear register	PSI51TXSTCLR	0000 0000H	32	FFE0 108CH	1	32	√	√	√	√	√	√	√	√	√
PSI51	PSI5 transmission status interrupt enable register	PSI51TXSTINTEN	0000 0000H	32	FFE0 1090H	1	32	√	√	√	√	√	√	√	√	√
PSI51	PSI5 transmit data control register	PSI51TXDCTRL	0000 0001H	32	FFE0 1094H	1	32	√	√	√	√	√	√	√	√	√
PSI51	PSI5 transmit data register	PSI51TXDATA	0000 0000H	32	FFE0 1098H	1	32	√	√	√	√	√	√	√	√	√
PSI51	PSI5 receive sampling setting register	PSI51RXSPLSET	0000 0027H	32	FFE0 1100H	1	32	√	√	√	√	√	√	√	√	√
PSI51	PSI5 receive slot 1 setting register	PSI51RXS1SET	00A0 0000H	32	FFE0 1108H	1	32	√	√	√	√	√	√	√	√	√
PSI51	PSI5 receive slot 2 setting register	PSI51RXS2SET	00A0 0000H	32	FFE0 110CH	1	32	√	√	√	√	√	√	√	√	√
PSI51	PSI5 receive slot 3 setting register	PSI51RXS3SET	00A0 0000H	32	FFE0 1110H	1	32	√	√	√	√	√	√	√	√	√
PSI51	PSI5 receive slot 4 setting register	PSI51RXS4SET	00A0 0000H	32	FFE0 1114H	1	32	√	√	√	√	√	√	√	√	√
PSI51	PSI5 receive slot 5 setting register	PSI51RXS5SET	00A0 0000H	32	FFE0 1118H	1	32	√	√	√	√	√	√	√	√	√
PSI51	PSI5 receive slot 6 setting register	PSI51RXS6SET	00A0 0000H	32	FFE0 111CH	1	32	√	√	√	√	√	√	√	√	√
PSI51	PSI5 receive slot 7 setting register	PSI51RXS7SET	00A0 0000H	32	FFE0 1120H	1	32	√	√	√	√	√	√	√	√	√
PSI51	PSI5 receive slot 8 setting register	PSI51RXS8SET	00A0 0000H	32	FFE0 1124H	1	32	√	√	√	√	√	√	√	√	√
PSI51	PSI5 receive data register	PSI51RXDATA	0000 0000H	32	FFE0 1128H	1	32	√	√	√	√	√	√	√	√	√
PSI51	PSI5 receive data status register	PSI51RXDST	0000 0000H	32	FFE0 112CH	1	32	√	√	√	√	√	√	√	√	√
PSI51	PSI5 receive data IP timer register	PSI51RXDTIM	0000 0000H	32	FFE0 1130H	1	32	√	√	√	√	√	√	√	√	√
PSI51	PSI5 receive data FIFO register	PSI51RXDFIFO	0000 0000H	32	FFE0 1134H	1	32	√	√	√	√	√	√	√	√	√
PSI51	PSI5 receive module status register	PSI51RXMODST	0000 0000H	32	FFE0 1138H	1	32	√	√	√	√	√	√	√	√	√
PSI51	PSI5 receive module status clear register	PSI51RXMODSTCLR	0000 0000H	32	FFE0 113CH	1	32	√	√	√	√	√	√	√	√	√
PSI51	PSI5 receive module status interrupt enable register	PSI51RXMODSTINTEN	0000 0000H	32	FFE0 1140H	1	32	√	√	√	√	√	√	√	√	√
PSI51	PSI5 receive message channel setting register	PSI51RXMSET	0000 0000H	32	FFE0 1180H	1	32	√	√	√	√	√	√	√	√	√
PSI51	PSI5 receive-message receive message register	PSI51RXMRXMSG	0000 0000H	32	FFE0 1184H	1	32	√	√	√	√	√	√	√	√	√
PSI51	PSI5 receive-message channel receive status register	PSI51RXMRXST	0000 0000H	32	FFE0 1188H	1	32	√	√	√	√	√	√	√	√	√
PSI51	PSI5 receive-message channel receive timestamp register	PSI51RXMRXTIM	0000 0000H	32	FFE0 118CH	1	32	√	√	√	√	√	√	√	√	√
PSI51	PSI5 receive-message channel FIFO register	PSI51RXMFIFO	0000 0000H	32	FFE0 1190H	1	32	√	√	√	√	√	√	√	√	√
PSI51	PSI5 receive-message channel module status register	PSI51RXMMST	0000 0000H	32	FFE0 1194H	1	32	√	√	√	√	√	√	√	√	√
PSI51	PSI5 receive-message channel module status clear register	PSI51RXMMSTCLR	0000 0000H	32	FFE0 1198H	1	32	√	√	√	√	√	√	√	√	√
PSI51	PSI5 receive-message channel module status interrupt enable register	PSI51RXMMSTINTEN	0000 0000H	32	FFE0 119CH	1	32	√	√	√	√	√	√	√	√	√
PSI5	PSI5 timestamp function mode selection register	PSI5TSSEL	0000 0000H	32	FFE0 3000H	1	32	√	√	√	√	√	√	√	√	√
RSENT0	RSENT timestamp register	RSENT0TSPC	0000 0000H	32	FFE0 5000H	1	32	√	√	√	√	√	√	√	√	√
RSENT0	RSENT timestamp counter	RSENT0TSC	0000 0000H	32	FFE0 5004H	1	32	√	√	√	√	√	√	√	√	√

Table A.1 List of Registers (46/124)

Module	Register	Symbol	Value after Reset	Number of Bits	Address	Peripheral IP group	Access Size	Reset Source*1							Access Authority*1	
								POCRES	CVMRES	EXTRES	DBRES	ECMRES	BISTRES	SWRES	SV	UM
RSENT0	RSENT communication configuration register	RSENT0CC	0000 0000$_H$	32	FFE0 5010$_H$	1	32	√	√	√	√	√	√	√	√	√
RSENT0	RSENT baud rate prescaler register	RSENT0BRP	0000 0000$_H$	32	FFE0 5014$_H$	1	32	√	√	√	√	√	√	√	√	√
RSENT0	RSENT interrupt/DMA enable register	RSENT0IDE	0000 0000$_H$	32	FFE0 5018$_H$	1	32	√	√	√	√	√	√	√	√	√
RSENT0	RSENT mode control register	RSENT0MDC	0000 0000$_H$	32	FFE0 501C$_H$	1	32	√	√	√	√	√	√	√	√	√
RSENT0	RSENT SPC transmission register	RSENT0SPCT	0000 0000$_H$	32	FFE0 5020$_H$	1	32	√	√	√	√	√	√	√	√	√
RSENT0	RSENT mode status register	RSENT0MST	0000 0000$_H$	32	FFE0 5024$_H$	1	32	√	√	√	√	√	√	√	√	√
RSENT0	RSENT communication status register	RSENT0CS	0000 0000$_H$	32	FFE0 5028$_H$	1	32	√	√	√	√	√	√	√	√	√
RSENT0	RSENT communication status clear register	RSENT0CSC	0000 0000$_H$	32	FFE0 502C$_H$	1	32	√	√	√	√	√	√	√	√	√
RSENT0	RSENT slow channel receive timestamp register	RSENT0SRTS	0000 0000$_H$	32	FFE0 5030$_H$	1	32	√	√	√	√	√	√	√	√	√
RSENT0	RSENT slow channel receive data register	RSENT0SRXD	0000 0000$_H$	32	FFE0 5034$_H$	1	32	√	√	√	√	√	√	√	√	√
RSENT0	RSENT calibration pulse length register	RSENT0CPL	0000 0000$_H$	32	FFE0 5038$_H$	1	32	√	√	√	√	√	√	√	√	√
RSENT0	RSENT message length register	RSENT0ML	0000 0000$_H$	32	FFE0 503C$_H$	1	32	√	√	√	√	√	√	√	√	√
RSENT0	RSENT fast channel receive timestamp register	RSENT0FRTS	0000 0000$_H$	32	FFE0 5040$_H$	1	32	√	√	√	√	√	√	√	√	√
RSENT0	RSENT fast channel receive data register	RSENT0FRXD	0000 0000$_H$	32	FFE0 5044$_H$	1	32	√	√	√	√	√	√	√	√	√
RSENT1	RSENT timestamp register	RSENT1TSPC	0000 0000$_H$	32	FFE0 6000$_H$	1	32	√	√	√	√	√	√	√	√	√
RSENT1	RSENT timestamp counter	RSENT1TSC	0000 0000$_H$	32	FFE0 6004$_H$	1	32	√	√	√	√	√	√	√	√	√
RSENT1	RSENT communication configuration register	RSENT1CC	0000 0000$_H$	32	FFE0 6010$_H$	1	32	√	√	√	√	√	√	√	√	√
RSENT1	RSENT baud rate prescaler register	RSENT1BRP	0000 0000$_H$	32	FFE0 6014$_H$	1	32	√	√	√	√	√	√	√	√	√
RSENT1	RSENT interrupt/DMA enable register	RSENT1IDE	0000 0000$_H$	32	FFE0 6018$_H$	1	32	√	√	√	√	√	√	√	√	√
RSENT1	RSENT mode control register	RSENT1MDC	0000 0000$_H$	32	FFE0 601C$_H$	1	32	√	√	√	√	√	√	√	√	√
RSENT1	RSENT SPC transmission register	RSENT1SPCT	0000 0000$_H$	32	FFE0 6020$_H$	1	32	√	√	√	√	√	√	√	√	√
RSENT1	RSENT mode status register	RSENT1MST	0000 0000$_H$	32	FFE0 6024$_H$	1	32	√	√	√	√	√	√	√	√	√
RSENT1	RSENT communication status register	RSENT1CS	0000 0000$_H$	32	FFE0 6028$_H$	1	32	√	√	√	√	√	√	√	√	√
RSENT1	RSENT communication status clear register	RSENT1CSC	0000 0000$_H$	32	FFE0 602C$_H$	1	32	√	√	√	√	√	√	√	√	√
RSENT1	RSENT slow channel receive timestamp register	RSENT1SRTS	0000 0000$_H$	32	FFE0 6030$_H$	1	32	√	√	√	√	√	√	√	√	√
RSENT1	RSENT slow channel receive data register	RSENT1SRXD	0000 0000$_H$	32	FFE0 6034$_H$	1	32	√	√	√	√	√	√	√	√	√
RSENT1	RSENT calibration pulse length register	RSENT1CPL	0000 0000$_H$	32	FFE0 6038$_H$	1	32	√	√	√	√	√	√	√	√	√
RSENT1	RSENT message length register	RSENT1ML	0000 0000$_H$	32	FFE0 603C$_H$	1	32	√	√	√	√	√	√	√	√	√
RSENT1	RSENT fast channel receive timestamp register	RSENT1FRTS	0000 0000$_H$	32	FFE0 6040$_H$	1	32	√	√	√	√	√	√	√	√	√
RSENT1	RSENT fast channel receive data register	RSENT1FRXD	0000 0000$_H$	32	FFE0 6044$_H$	1	32	√	√	√	√	√	√	√	√	√
RSENT2	RSENT timestamp register	RSENT2TSPC	0000 0000$_H$	32	FFE0 7000$_H$	1	32	√	√	√	√	√	√	√	√	√
RSENT2	RSENT timestamp counter	RSENT2TSC	0000 0000$_H$	32	FFE0 7004$_H$	1	32	√	√	√	√	√	√	√	√	√
RSENT2	RSENT communication configuration register	RSENT2CC	0000 0000$_H$	32	FFE0 7010$_H$	1	32	√	√	√	√	√	√	√	√	√
RSENT2	RSENT baud rate prescaler register	RSENT2BRP	0000 0000$_H$	32	FFE0 7014$_H$	1	32	√	√	√	√	√	√	√	√	√
RSENT2	RSENT interrupt/DMA enable register	RSENT2IDE	0000 0000$_H$	32	FFE0 7018$_H$	1	32	√	√	√	√	√	√	√	√	√
RSENT2	RSENT mode control register	RSENT2MDC	0000 0000$_H$	32	FFE0 701C$_H$	1	32	√	√	√	√	√	√	√	√	√
RSENT2	RSENT SPC transmission register	RSENT2SPCT	0000 0000$_H$	32	FFE0 7020$_H$	1	32	√	√	√	√	√	√	√	√	√
RSENT2	RSENT mode status register	RSENT2MST	0000 0000$_H$	32	FFE0 7024$_H$	1	32	√	√	√	√	√	√	√	√	√
RSENT2	RSENT communication status register	RSENT2CS	0000 0000$_H$	32	FFE0 7028$_H$	1	32	√	√	√	√	√	√	√	√	√
RSENT2	RSENT communication status clear register	RSENT2CSC	0000 0000$_H$	32	FFE0 702C$_H$	1	32	√	√	√	√	√	√	√	√	√
RSENT2	RSENT slow channel receive timestamp register	RSENT2SRTS	0000 0000$_H$	32	FFE0 7030$_H$	1	32	√	√	√	√	√	√	√	√	√
RSENT2	RSENT slow channel receive data register	RSENT2SRXD	0000 0000$_H$	32	FFE0 7034$_H$	1	32	√	√	√	√	√	√	√	√	√
RSENT2	RSENT calibration pulse length register	RSENT2CPL	0000 0000$_H$	32	FFE0 7038$_H$	1	32	√	√	√	√	√	√	√	√	√
RSENT2	RSENT message length register	RSENT2ML	0000 0000$_H$	32	FFE0 703C$_H$	1	32	√	√	√	√	√	√	√	√	√
RSENT2	RSENT fast channel receive timestamp register	RSENT2FRTS	0000 0000$_H$	32	FFE0 7040$_H$	1	32	√	√	√	√	√	√	√	√	√
RSENT2	RSENT fast channel receive data register	RSENT2FRXD	0000 0000$_H$	32	FFE0 7044$_H$	1	32	√	√	√	√	√	√	√	√	√
RSENT3	RSENT timestamp register	RSENT3TSPC	0000 0000$_H$	32	FFE0 8000$_H$	1	32	√	√	√	√	√	√	√	√	√
RSENT3	RSENT timestamp counter	RSENT3TSC	0000 0000$_H$	32	FFE0 8004$_H$	1	32	√	√	√	√	√	√	√	√	√
RSENT3	RSENT communication configuration register	RSENT3CC	0000 0000$_H$	32	FFE0 8010$_H$	1	32	√	√	√	√	√	√	√	√	√
RSENT3	RSENT baud rate prescaler register	RSENT3BRP	0000 0000$_H$	32	FFE0 8014$_H$	1	32	√	√	√	√	√	√	√	√	√
RSENT3	RSENT interrupt/DMA enable register	RSENT3IDE	0000 0000$_H$	32	FFE0 8018$_H$	1	32	√	√	√	√	√	√	√	√	√
RSENT3	RSENT mode control register	RSENT3MDC	0000 0000$_H$	32	FFE0 801C$_H$	1	32	√	√	√	√	√	√	√	√	√
RSENT3	RSENT SPC transmission register	RSENT3SPCT	0000 0000$_H$	32	FFE0 8020$_H$	1	32	√	√	√	√	√	√	√	√	√

Table A.1 List of Registers (47/124)

Module	Register	Symbol	Value after Reset	Number of Bits	Address	Peripheral IP group	Access Size	Reset Source*1							Access Authority*1	
								POCRES	CVMRES	EXTRES	DBRES	ECMRES	BISTRES	SWRES	SV	UM
RSENT3	RSENT mode status register	RSENT3MST	$0000\ 0000_H$	32	$FFE0\ 8024_H$	1	32	√	√	√	√	√	√	√	√	√
RSENT3	RSENT communication status register	RSENT3CS	$0000\ 0000_H$	32	$FFE0\ 8028_H$	1	32	√	√	√	√	√	√	√	√	√
RSENT3	RSENT communication status clear register	RSENT3CSC	$0000\ 0000_H$	32	$FFE0\ 802C_H$	1	32	√	√	√	√	√	√	√	√	√
RSENT3	RSENT slow channel receive timestamp register	RSENT3SRTS	$0000\ 0000_H$	32	$FFE0\ 8030_H$	1	32	√	√	√	√	√	√	√	√	√
RSENT3	RSENT slow channel receive data register	RSENT3SRXD	$0000\ 0000_H$	32	$FFE0\ 8034_H$	1	32	√	√	√	√	√	√	√	√	√
RSENT3	RSENT calibration pulse length register	RSENT3CPL	$0000\ 0000_H$	32	$FFE0\ 8038_H$	1	32	√	√	√	√	√	√	√	√	√
RSENT3	RSENT message length register	RSENT3ML	$0000\ 0000_H$	32	$FFE0\ 803C_H$	1	32	√	√	√	√	√	√	√	√	√
RSENT3	RSENT fast channel receive timestamp register	RSENT3FRTS	$0000\ 0000_H$	32	$FFE0\ 8040_H$	1	32	√	√	√	√	√	√	√	√	√
RSENT3	RSENT fast channel receive data register	RSENT3FRXD	$0000\ 0000_H$	32	$FFE0\ 8044_H$	1	32	√	√	√	√	√	√	√	√	√
RSENT4	RSENT timestamp register	RSENT4TSPC	$0000\ 0000_H$	32	$FFE0\ 9000_H$	1	32	√	√	√	√	√	√	√	√	√
RSENT4	RSENT timestamp counter	RSENT4TSC	$0000\ 0000_H$	32	$FFE0\ 9004_H$	1	32	√	√	√	√	√	√	√	√	√
RSENT4	RSENT communication configuration register	RSENT4CC	$0000\ 0000_H$	32	$FFE0\ 9010_H$	1	32	√	√	√	√	√	√	√	√	√
RSENT4	RSENT baud rate prescaler register	RSENT4BRP	$0000\ 0000_H$	32	$FFE0\ 9014_H$	1	32	√	√	√	√	√	√	√	√	√
RSENT4	RSENT interrupt/DMA enable register	RSENT4IDE	$0000\ 0000_H$	32	$FFE0\ 9018_H$	1	32	√	√	√	√	√	√	√	√	√
RSENT4	RSENT mode control register	RSENT4MDC	$0000\ 0000_H$	32	$FFE0\ 901C_H$	1	32	√	√	√	√	√	√	√	√	√
RSENT4	RSENT SPC transmission register	RSENT4SPCT	$0000\ 0000_H$	32	$FFE0\ 9020_H$	1	32	√	√	√	√	√	√	√	√	√
RSENT4	RSENT mode status register	RSENT4MST	$0000\ 0000_H$	32	$FFE0\ 9024_H$	1	32	√	√	√	√	√	√	√	√	√
RSENT4	RSENT communication status register	RSENT4CS	$0000\ 0000_H$	32	$FFE0\ 9028_H$	1	32	√	√	√	√	√	√	√	√	√
RSENT4	RSENT communication status clear register	RSENT4CSC	$0000\ 0000_H$	32	$FFE0\ 902C_H$	1	32	√	√	√	√	√	√	√	√	√
RSENT4	RSENT slow channel receive timestamp register	RSENT4SRTS	$0000\ 0000_H$	32	$FFE0\ 9030_H$	1	32	√	√	√	√	√	√	√	√	√
RSENT4	RSENT slow channel receive data register	RSENT4SRXD	$0000\ 0000_H$	32	$FFE0\ 9034_H$	1	32	√	√	√	√	√	√	√	√	√
RSENT4	RSENT calibration pulse length register	RSENT4CPL	$0000\ 0000_H$	32	$FFE0\ 9038_H$	1	32	√	√	√	√	√	√	√	√	√
RSENT4	RSENT message length register	RSENT4ML	$0000\ 0000_H$	32	$FFE0\ 903C_H$	1	32	√	√	√	√	√	√	√	√	√
RSENT4	RSENT fast channel receive timestamp register	RSENT4FRTS	$0000\ 0000_H$	32	$FFE0\ 9040_H$	1	32	√	√	√	√	√	√	√	√	√
RSENT4	RSENT fast channel receive data register	RSENT4FRXD	$0000\ 0000_H$	32	$FFE0\ 9044_H$	1	32	√	√	√	√	√	√	√	√	√
RSENT5	RSENT timestamp register	RSENT5TSPC	$0000\ 0000_H$	32	$FFE0\ A000_H$	1	32	√	√	√	√	√	√	√	√	√
RSENT5	RSENT timestamp counter	RSENT5TSC	$0000\ 0000_H$	32	$FFE0\ A004_H$	1	32	√	√	√	√	√	√	√	√	√
RSENT5	RSENT communication configuration register	RSENT5CC	$0000\ 0000_H$	32	$FFE0\ A010_H$	1	32	√	√	√	√	√	√	√	√	√
RSENT5	RSENT baud rate prescaler register	RSENT5BRP	$0000\ 0000_H$	32	$FFE0\ A014_H$	1	32	√	√	√	√	√	√	√	√	√
RSENT5	RSENT interrupt/DMA enable register	RSENT5IDE	$0000\ 0000_H$	32	$FFE0\ A018_H$	1	32	√	√	√	√	√	√	√	√	√
RSENT5	RSENT mode control register	RSENT5MDC	$0000\ 0000_H$	32	$FFE0\ A01C_H$	1	32	√	√	√	√	√	√	√	√	√
RSENT5	RSENT SPC transmission register	RSENT5SPCT	$0000\ 0000_H$	32	$FFE0\ A020_H$	1	32	√	√	√	√	√	√	√	√	√
RSENT5	RSENT mode status register	RSENT5MST	$0000\ 0000_H$	32	$FFE0\ A024_H$	1	32	√	√	√	√	√	√	√	√	√
RSENT5	RSENT communication status register	RSENT5CS	$0000\ 0000_H$	32	$FFE0\ A028_H$	1	32	√	√	√	√	√	√	√	√	√
RSENT5	RSENT communication status clear register	RSENT5CSC	$0000\ 0000_H$	32	$FFE0\ A02C_H$	1	32	√	√	√	√	√	√	√	√	√
RSENT5	RSENT slow channel receive timestamp register	RSENT5SRTS	$0000\ 0000_H$	32	$FFE0\ A030_H$	1	32	√	√	√	√	√	√	√	√	√
RSENT5	RSENT slow channel receive data register	RSENT5SRXD	$0000\ 0000_H$	32	$FFE0\ A034_H$	1	32	√	√	√	√	√	√	√	√	√
RSENT5	RSENT calibration pulse length register	RSENT5CPL	$0000\ 0000_H$	32	$FFE0\ A038_H$	1	32	√	√	√	√	√	√	√	√	√
RSENT5	RSENT message length register	RSENT5ML	$0000\ 0000_H$	32	$FFE0\ A03C_H$	1	32	√	√	√	√	√	√	√	√	√
RSENT5	RSENT fast channel receive timestamp register	RSENT5FRTS	$0000\ 0000_H$	32	$FFE0\ A040_H$	1	32	√	√	√	√	√	√	√	√	√
RSENT5	RSENT fast channel receive data register	RSENT5FRXD	$0000\ 0000_H$	32	$FFE0\ A044_H$	1	32	√	√	√	√	√	√	√	√	√
RSENT	RSENT timestamp mode selection register	RSENTTSSEL	$0000\ 0000_H$	32	$FFE0\ F000_H$	1	32	√	√	√	√	√	√	√	√	√
TAUD0	TAUD0 channel data register 0	TAUD0CDR0	0000_H	16	$FFE2\ 0000_H$	1	16	√	√	√	√	√	√	√	√	√
TAUD0	TAUD0 channel data register 1	TAUD0CDR1	0000_H	16	$FFE2\ 0004_H$	1	16	√	√	√	√	√	√	√	√	√
TAUD0	TAUD0 channel data register 2	TAUD0CDR2	0000_H	16	$FFE2\ 0008_H$	1	16	√	√	√	√	√	√	√	√	√
TAUD0	TAUD0 channel data register 3	TAUD0CDR3	0000_H	16	$FFE2\ 000C_H$	1	16	√	√	√	√	√	√	√	√	√
TAUD0	TAUD0 channel data register 4	TAUD0CDR4	0000_H	16	$FFE2\ 0010_H$	1	16	√	√	√	√	√	√	√	√	√
TAUD0	TAUD0 channel data register 5	TAUD0CDR5	0000_H	16	$FFE2\ 0014_H$	1	16	√	√	√	√	√	√	√	√	√
TAUD0	TAUD0 channel data register 6	TAUD0CDR6	0000_H	16	$FFE2\ 0018_H$	1	16	√	√	√	√	√	√	√	√	√
TAUD0	TAUD0 channel data register 7	TAUD0CDR7	0000_H	16	$FFE2\ 001C_H$	1	16	√	√	√	√	√	√	√	√	√
TAUD0	TAUD0 channel data register 8	TAUD0CDR8	0000_H	16	$FFE2\ 0020_H$	1	16	√	√	√	√	√	√	√	√	√
TAUD0	TAUD0 channel data register 9	TAUD0CDR9	0000_H	16	$FFE2\ 0024_H$	1	16	√	√	√	√	√	√	√	√	√
TAUD0	TAUD0 channel data register 10	TAUD0CDR10	0000_H	16	$FFE2\ 0028_H$	1	16	√	√	√	√	√	√	√	√	√

Table A.1 List of Registers (48/124)

Module	Register	Symbol	Value after Reset	Number of Bits	Address	Peripheral IP group	Access Size	Reset Source*1							Access Authority*1	
								POCRES	CVMRES	EXTRES	DBRES	ECMRES	BISTRES	SWRES	SV	UM
TAUD0	TAUD0 channel data register 11	TAUD0CDR11	0000_H	16	$FFE2\ 002C_H$	1	16	√	√	√	√	√	√	√	√	√
TAUD0	TAUD0 channel data register 12	TAUD0CDR12	0000_H	16	$FFE2\ 0030_H$	1	16	√	√	√	√	√	√	√	√	√
TAUD0	TAUD0 channel data register 13	TAUD0CDR13	0000_H	16	$FFE2\ 0034_H$	1	16	√	√	√	√	√	√	√	√	√
TAUD0	TAUD0 channel data register 14	TAUD0CDR14	0000_H	16	$FFE2\ 0038_H$	1	16	√	√	√	√	√	√	√	√	√
TAUD0	TAUD0 channel data register 15	TAUD0CDR15	0000_H	16	$FFE2\ 003C_H$	1	16	√	√	√	√	√	√	√	√	√
TAUD0	TAUD0 channel output active level register	TAUD0TOL	0000_H	16	$FFE2\ 0040_H$	1	16	√	√	√	√	√	√	√	√	√
TAUD0	TAUD0 channel reload data trigger register	TAUD0RDT	0000_H	16	$FFE2\ 0044_H$	1	16	√	√	√	√	√	√	√	√	√
TAUD0	TAUD0 channel reload status register	TAUD0RSF	0000_H	16	$FFE2\ 0048_H$	1	16	√	√	√	√	√	√	√	√	√
TAUD0	TAUD0 channel real-time output register	TAUD0TRO	0000_H	16	$FFE2\ 004C_H$	1	16	√	√	√	√	√	√	√	√	√
TAUD0	TAUD0 channel modulation output enable register	TAUD0TME	0000_H	16	$FFE2\ 0050_H$	1	16	√	√	√	√	√	√	√	√	√
TAUD0	TAUD0 channel dead time output level register	TAUD0TDL	0000_H	16	$FFE2\ 0054_H$	1	16	√	√	√	√	√	√	√	√	√
TAUD0	TAUD0 channel output register	TAUD0TO	0000_H	16	$FFE2\ 0058_H$	1	16	√	√	√	√	√	√	√	√	√
TAUD0	TAUD0 channel output enable register	TAUD0TOE	0000_H	16	$FFE2\ 005C_H$	1	16	√	√	√	√	√	√	√	√	√
TAUD0	TAUD0 channel counter register 0	TAUD0CNT0	$FFFF_H$	16	$FFE2\ 0080_H$	1	16	√	√	√	√	√	√	√	√	√
TAUD0	TAUD0 channel counter register 1	TAUD0CNT1	$FFFF_H$	16	$FFE2\ 0084_H$	1	16	√	√	√	√	√	√	√	√	√
TAUD0	TAUD0 channel counter register 2	TAUD0CNT2	$FFFF_H$	16	$FFE2\ 0088_H$	1	16	√	√	√	√	√	√	√	√	√
TAUD0	TAUD0 channel counter register 3	TAUD0CNT3	$FFFF_H$	16	$FFE2\ 008C_H$	1	16	√	√	√	√	√	√	√	√	√
TAUD0	TAUD0 channel counter register 4	TAUD0CNT4	$FFFF_H$	16	$FFE2\ 0090_H$	1	16	√	√	√	√	√	√	√	√	√
TAUD0	TAUD0 channel counter register 5	TAUD0CNT5	$FFFF_H$	16	$FFE2\ 0094_H$	1	16	√	√	√	√	√	√	√	√	√
TAUD0	TAUD0 channel counter register 6	TAUD0CNT6	$FFFF_H$	16	$FFE2\ 0098_H$	1	16	√	√	√	√	√	√	√	√	√
TAUD0	TAUD0 channel counter register 7	TAUD0CNT7	$FFFF_H$	16	$FFE2\ 009C_H$	1	16	√	√	√	√	√	√	√	√	√
TAUD0	TAUD0 channel counter register 8	TAUD0CNT8	$FFFF_H$	16	$FFE2\ 00A0_H$	1	16	√	√	√	√	√	√	√	√	√
TAUD0	TAUD0 channel counter register 9	TAUD0CNT9	$FFFF_H$	16	$FFE2\ 00A4_H$	1	16	√	√	√	√	√	√	√	√	√
TAUD0	TAUD0 channel counter register 10	TAUD0CNT10	$FFFF_H$	16	$FFE2\ 00A8_H$	1	16	√	√	√	√	√	√	√	√	√
TAUD0	TAUD0 channel counter register 11	TAUD0CNT11	$FFFF_H$	16	$FFE2\ 00AC_H$	1	16	√	√	√	√	√	√	√	√	√
TAUD0	TAUD0 channel counter register 12	TAUD0CNT12	$FFFF_H$	16	$FFE2\ 00B0_H$	1	16	√	√	√	√	√	√	√	√	√
TAUD0	TAUD0 channel counter register 13	TAUD0CNT13	$FFFF_H$	16	$FFE2\ 00B4_H$	1	16	√	√	√	√	√	√	√	√	√
TAUD0	TAUD0 channel counter register 14	TAUD0CNT14	$FFFF_H$	16	$FFE2\ 00B8_H$	1	16	√	√	√	√	√	√	√	√	√
TAUD0	TAUD0 channel counter register 15	TAUD0CNT15	$FFFF_H$	16	$FFE2\ 00BC_H$	1	16	√	√	√	√	√	√	√	√	√
TAUD0	TAUD0 channel mode user register 0	TAUD0CMUR0	00_H	8	$FFE2\ 00C0_H$	1	8	√	√	√	√	√	√	√	√	√
TAUD0	TAUD0 channel mode user register 1	TAUD0CMUR1	00_H	8	$FFE2\ 00C4_H$	1	8	√	√	√	√	√	√	√	√	√
TAUD0	TAUD0 channel mode user register 2	TAUD0CMUR2	00_H	8	$FFE2\ 00C8_H$	1	8	√	√	√	√	√	√	√	√	√
TAUD0	TAUD0 channel mode user register 3	TAUD0CMUR3	00_H	8	$FFE2\ 00CC_H$	1	8	√	√	√	√	√	√	√	√	√
TAUD0	TAUD0 channel mode user register 4	TAUD0CMUR4	00_H	8	$FFE2\ 00D0_H$	1	8	√	√	√	√	√	√	√	√	√
TAUD0	TAUD0 channel mode user register 5	TAUD0CMUR5	00_H	8	$FFE2\ 00D4_H$	1	8	√	√	√	√	√	√	√	√	√
TAUD0	TAUD0 channel mode user register 6	TAUD0CMUR6	00_H	8	$FFE2\ 00D8_H$	1	8	√	√	√	√	√	√	√	√	√
TAUD0	TAUD0 channel mode user register 7	TAUD0CMUR7	00_H	8	$FFE2\ 00DC_H$	1	8	√	√	√	√	√	√	√	√	√
TAUD0	TAUD0 channel mode user register 8	TAUD0CMUR8	00_H	8	$FFE2\ 00E0_H$	1	8	√	√	√	√	√	√	√	√	√
TAUD0	TAUD0 channel mode user register 9	TAUD0CMUR9	00_H	8	$FFE2\ 00E4_H$	1	8	√	√	√	√	√	√	√	√	√
TAUD0	TAUD0 channel mode user register 10	TAUD0CMUR10	00_H	8	$FFE2\ 00E8_H$	1	8	√	√	√	√	√	√	√	√	√
TAUD0	TAUD0 channel mode user register 11	TAUD0CMUR11	00_H	8	$FFE2\ 00EC_H$	1	8	√	√	√	√	√	√	√	√	√
TAUD0	TAUD0 channel mode user register 12	TAUD0CMUR12	00_H	8	$FFE2\ 00F0_H$	1	8	√	√	√	√	√	√	√	√	√
TAUD0	TAUD0 channel mode user register 13	TAUD0CMUR13	00_H	8	$FFE2\ 00F4_H$	1	8	√	√	√	√	√	√	√	√	√
TAUD0	TAUD0 channel mode user register 14	TAUD0CMUR14	00_H	8	$FFE2\ 00F8_H$	1	8	√	√	√	√	√	√	√	√	√
TAUD0	TAUD0 channel mode user register 15	TAUD0CMUR15	00_H	8	$FFE2\ 00FC_H$	1	8	√	√	√	√	√	√	√	√	√
TAUD0	TAUD0 channel status register 0	TAUD0CSR0	00_H	8	$FFE2\ 0140_H$	1	8	√	√	√	√	√	√	√	√	√
TAUD0	TAUD0 channel status register 1	TAUD0CSR1	00_H	8	$FFE2\ 0144_H$	1	8	√	√	√	√	√	√	√	√	√
TAUD0	TAUD0 channel status register 2	TAUD0CSR2	00_H	8	$FFE2\ 0148_H$	1	8	√	√	√	√	√	√	√	√	√
TAUD0	TAUD0 channel status register 3	TAUD0CSR3	00_H	8	$FFE2\ 014C_H$	1	8	√	√	√	√	√	√	√	√	√
TAUD0	TAUD0 channel status register 4	TAUD0CSR4	00_H	8	$FFE2\ 0150_H$	1	8	√	√	√	√	√	√	√	√	√
TAUD0	TAUD0 channel status register 5	TAUD0CSR5	00_H	8	$FFE2\ 0154_H$	1	8	√	√	√	√	√	√	√	√	√
TAUD0	TAUD0 channel status register 6	TAUD0CSR6	00_H	8	$FFE2\ 0158_H$	1	8	√	√	√	√	√	√	√	√	√
TAUD0	TAUD0 channel status register 7	TAUD0CSR7	00_H	8	$FFE2\ 015C_H$	1	8	√	√	√	√	√	√	√	√	√

Table A.1 List of Registers (49/124)

Module	Register	Symbol	Value after Reset	Number of Bits	Address	Peripheral IP group	Access Size	Reset Source*1							Access Authority*1	
								POCRES	CVMRES	EXTRES	DBRES	ECMRES	BISTRES	SWRES	SV	UM
TAUD0	TAUD0 channel status register 8	TAUD0CSR8	00_H	8	$FFE2\ 0160_H$	1	8	√	√	√	√	√	√	√	√	√
TAUD0	TAUD0 channel status register 9	TAUD0CSR9	00_H	8	$FFE2\ 0164_H$	1	8	√	√	√	√	√	√	√	√	√
TAUD0	TAUD0 channel status register 10	TAUD0CSR10	00_H	8	$FFE2\ 0168_H$	1	8	√	√	√	√	√	√	√	√	√
TAUD0	TAUD0 channel status register 11	TAUD0CSR11	00_H	8	$FFE2\ 016C_H$	1	8	√	√	√	√	√	√	√	√	√
TAUD0	TAUD0 channel status register 12	TAUD0CSR12	00_H	8	$FFE2\ 0170_H$	1	8	√	√	√	√	√	√	√	√	√
TAUD0	TAUD0 channel status register 13	TAUD0CSR13	00_H	8	$FFE2\ 0174_H$	1	8	√	√	√	√	√	√	√	√	√
TAUD0	TAUD0 channel status register 14	TAUD0CSR14	00_H	8	$FFE2\ 0178_H$	1	8	√	√	√	√	√	√	√	√	√
TAUD0	TAUD0 channel status register 15	TAUD0CSR15	00_H	8	$FFE2\ 017C_H$	1	8	√	√	√	√	√	√	√	√	√
TAUD0	TAUD0 Channel Status Clear Trigger Register 0	TAUD0CSC0	00_H	8	$FFE2\ 0180_H$	1	8	√	√	√	√	√	√	√	√	√
TAUD0	TAUD0 Channel Status Clear Trigger Register 1	TAUD0CSC1	00_H	8	$FFE2\ 0184_H$	1	8	√	√	√	√	√	√	√	√	√
TAUD0	TAUD0 Channel Status Clear Trigger Register 2	TAUD0CSC2	00_H	8	$FFE2\ 0188_H$	1	8	√	√	√	√	√	√	√	√	√
TAUD0	TAUD0 Channel Status Clear Trigger Register 3	TAUD0CSC3	00_H	8	$FFE2\ 018C_H$	1	8	√	√	√	√	√	√	√	√	√
TAUD0	TAUD0 Channel Status Clear Trigger Register 4	TAUD0CSC4	00_H	8	$FFE2\ 0190_H$	1	8	√	√	√	√	√	√	√	√	√
TAUD0	TAUD0 Channel Status Clear Trigger Register 5	TAUD0CSC5	00_H	8	$FFE2\ 0194_H$	1	8	√	√	√	√	√	√	√	√	√
TAUD0	TAUD0 Channel Status Clear Trigger Register 6	TAUD0CSC6	00_H	8	$FFE2\ 0198_H$	1	8	√	√	√	√	√	√	√	√	√
TAUD0	TAUD0 Channel Status Clear Trigger Register 7	TAUD0CSC7	00_H	8	$FFE2\ 019C_H$	1	8	√	√	√	√	√	√	√	√	√
TAUD0	TAUD0 Channel Status Clear Trigger Register 8	TAUD0CSC8	00_H	8	$FFE2\ 01A0_H$	1	8	√	√	√	√	√	√	√	√	√
TAUD0	TAUD0 Channel Status Clear Trigger Register 9	TAUD0CSC9	00_H	8	$FFE2\ 01A4_H$	1	8	√	√	√	√	√	√	√	√	√
TAUD0	TAUD0 Channel Status Clear Trigger Register 10	TAUD0CSC10	00_H	8	$FFE2\ 01A8_H$	1	8	√	√	√	√	√	√	√	√	√
TAUD0	TAUD0 Channel Status Clear Trigger Register 11	TAUD0CSC11	00_H	8	$FFE2\ 01AC_H$	1	8	√	√	√	√	√	√	√	√	√
TAUD0	TAUD0 Channel Status Clear Trigger Register 12	TAUD0CSC12	00_H	8	$FFE2\ 01B0_H$	1	8	√	√	√	√	√	√	√	√	√
TAUD0	TAUD0 Channel Status Clear Trigger Register 13	TAUD0CSC13	00_H	8	$FFE2\ 01B4_H$	1	8	√	√	√	√	√	√	√	√	√
TAUD0	TAUD0 Channel Status Clear Trigger Register 14	TAUD0CSC14	00_H	8	$FFE2\ 01B8_H$	1	8	√	√	√	√	√	√	√	√	√
TAUD0	TAUD0 Channel Status Clear Trigger Register 15	TAUD0CSC15	00_H	8	$FFE2\ 01BC_H$	1	8	√	√	√	√	√	√	√	√	√
TAUD0	TAUD0 channel enable status register	TAUD0TE	0000_H	16	$FFE2\ 01C0_H$	1	16	√	√	√	√	√	√	√	√	√
TAUD0	TAUD0 channel start trigger register	TAUD0TS	0000_H	16	$FFE2\ 01C4_H$	1	16	√	√	√	√	√	√	√	√	√
TAUD0	TAUD0 channel stop trigger register	TAUD0TT	0000_H	16	$FFE2\ 01C8_H$	1	16	√	√	√	√	√	√	√	√	√
TAUD0	TAUD0 channel mode OS register 0	TAUD0CMOR0	0000_H	16	$FFE2\ 0200_H$	1	16	√	√	√	√	√	√	√	√	√
TAUD0	TAUD0 channel mode OS register 1	TAUD0CMOR1	0000_H	16	$FFE2\ 0204_H$	1	16	√	√	√	√	√	√	√	√	√
TAUD0	TAUD0 channel mode OS register 2	TAUD0CMOR2	0000_H	16	$FFE2\ 0208_H$	1	16	√	√	√	√	√	√	√	√	√
TAUD0	TAUD0 channel mode OS register 3	TAUD0CMOR3	0000_H	16	$FFE2\ 020C_H$	1	16	√	√	√	√	√	√	√	√	√
TAUD0	TAUD0 channel mode OS register 4	TAUD0CMOR4	0000_H	16	$FFE2\ 0210_H$	1	16	√	√	√	√	√	√	√	√	√
TAUD0	TAUD0 channel mode OS register 5	TAUD0CMOR5	0000_H	16	$FFE2\ 0214_H$	1	16	√	√	√	√	√	√	√	√	√
TAUD0	TAUD0 channel mode OS register 6	TAUD0CMOR6	0000_H	16	$FFE2\ 0218_H$	1	16	√	√	√	√	√	√	√	√	√
TAUD0	TAUD0 channel mode OS register 7	TAUD0CMOR7	0000_H	16	$FFE2\ 021C_H$	1	16	√	√	√	√	√	√	√	√	√
TAUD0	TAUD0 channel mode OS register 8	TAUD0CMOR8	0000_H	16	$FFE2\ 0220_H$	1	16	√	√	√	√	√	√	√	√	√
TAUD0	TAUD0 channel mode OS register 9	TAUD0CMOR9	0000_H	16	$FFE2\ 0224_H$	1	16	√	√	√	√	√	√	√	√	√
TAUD0	TAUD0 channel mode OS register 10	TAUD0CMOR10	0000_H	16	$FFE2\ 0228_H$	1	16	√	√	√	√	√	√	√	√	√
TAUD0	TAUD0 channel mode OS register 11	TAUD0CMOR11	0000_H	16	$FFE2\ 022C_H$	1	16	√	√	√	√	√	√	√	√	√
TAUD0	TAUD0 channel mode OS register 12	TAUD0CMOR12	0000_H	16	$FFE2\ 0230_H$	1	16	√	√	√	√	√	√	√	√	√
TAUD0	TAUD0 channel mode OS register 13	TAUD0CMOR13	0000_H	16	$FFE2\ 0234_H$	1	16	√	√	√	√	√	√	√	√	√
TAUD0	TAUD0 channel mode OS register 14	TAUD0CMOR14	0000_H	16	$FFE2\ 0238_H$	1	16	√	√	√	√	√	√	√	√	√
TAUD0	TAUD0 channel mode OS register 15	TAUD0CMOR15	0000_H	16	$FFE2\ 023C_H$	1	16	√	√	√	√	√	√	√	√	√
TAUD0	TAUD0 prescaler clock select register	TAUD0TPS	$FFFF_H$	16	$FFE2\ 0240_H$	1	16	√	√	√	√	√	√	√	√	√
TAUD0	TAUD0 prescaler baud rate setting register	TAUD0BRS	00_H	8	$FFE2\ 0244_H$	1	8	√	√	√	√	√	√	√	√	√
TAUD0	TAUD0 channel output mode register	TAUD0TOM	0000_H	16	$FFE2\ 0248_H$	1	16	√	√	√	√	√	√	√	√	√
TAUD0	TAUD0 channel output configuration register	TAUD0TOC	0000_H	16	$FFE2\ 024C_H$	1	16	√	√	√	√	√	√	√	√	√
TAUD0	TAUD0 channel dead time output enable register	TAUD0TDE	0000_H	16	$FFE2\ 0250_H$	1	16	√	√	√	√	√	√	√	√	√
TAUD0	TAUD0 channel dead time output mode register	TAUD0TDM	0000_H	16	$FFE2\ 0254_H$	1	16	√	√	√	√	√	√	√	√	√
TAUD0	TAUD0 channel real-time output enable register	TAUD0TRE	0000_H	16	$FFE2\ 0258_H$	1	16	√	√	√	√	√	√	√	√	√
TAUD0	TAUD0 channel real-time output control register	TAUD0TRC	0000_H	16	$FFE2\ 025C_H$	1	16	√	√	√	√	√	√	√	√	√
TAUD0	TAUD0 channel reload data enable register	TAUD0RDE	0000_H	16	$FFE2\ 0260_H$	1	16	√	√	√	√	√	√	√	√	√
TAUD0	TAUD0 channel reload data mode register	TAUD0RDM	0000_H	16	$FFE2\ 0264_H$	1	16	√	√	√	√	√	√	√	√	√

Table A.1 List of Registers (50/124)

Module	Register	Symbol	Value after Reset	Number of Bits	Address	Peripheral IP group	Access Size	Reset Source*1							Access Authority*1	
								POCRES	CVMRES	EXTRES	DBRES	ECMRES	BISTRES	SWRES	SV	UM
TAUD0	TAUD0 channel reload data control CH select register	TAUD0RDS	0000_H	16	$FFE2\ 0268_H$	1	16	√	√	√	√	√	√	√	√	√
TAUD0	TAUD0 channel reload data control register	TAUD0RDC	0000_H	16	$FFE2\ 026C_H$	1	16	√	√	√	√	√	√	√	√	√
TAUD1	TAUD1 channel data register 0	TAUD1CDR0	0000_H	16	$FFE2\ 1000_H$	1	16	√	√	√	√	√	√	√	√	√
TAUD1	TAUD1 channel data register 1	TAUD1CDR1	0000_H	16	$FFE2\ 1004_H$	1	16	√	√	√	√	√	√	√	√	√
TAUD1	TAUD1 channel data register 2	TAUD1CDR2	0000_H	16	$FFE2\ 1008_H$	1	16	√	√	√	√	√	√	√	√	√
TAUD1	TAUD1 channel data register 3	TAUD1CDR3	0000_H	16	$FFE2\ 100C_H$	1	16	√	√	√	√	√	√	√	√	√
TAUD1	TAUD1 channel data register 4	TAUD1CDR4	0000_H	16	$FFE2\ 1010_H$	1	16	√	√	√	√	√	√	√	√	√
TAUD1	TAUD1 channel data register 5	TAUD1CDR5	0000_H	16	$FFE2\ 1014_H$	1	16	√	√	√	√	√	√	√	√	√
TAUD1	TAUD1 channel data register 6	TAUD1CDR6	0000_H	16	$FFE2\ 1018_H$	1	16	√	√	√	√	√	√	√	√	√
TAUD1	TAUD1 channel data register 7	TAUD1CDR7	0000_H	16	$FFE2\ 101C_H$	1	16	√	√	√	√	√	√	√	√	√
TAUD1	TAUD1 channel data register 8	TAUD1CDR8	0000_H	16	$FFE2\ 1020_H$	1	16	√	√	√	√	√	√	√	√	√
TAUD1	TAUD1 channel data register 9	TAUD1CDR9	0000_H	16	$FFE2\ 1024_H$	1	16	√	√	√	√	√	√	√	√	√
TAUD1	TAUD1 channel data register 10	TAUD1CDR10	0000_H	16	$FFE2\ 1028_H$	1	16	√	√	√	√	√	√	√	√	√
TAUD1	TAUD1 channel data register 11	TAUD1CDR11	0000_H	16	$FFE2\ 102C_H$	1	16	√	√	√	√	√	√	√	√	√
TAUD1	TAUD1 channel data register 12	TAUD1CDR12	0000_H	16	$FFE2\ 1030_H$	1	16	√	√	√	√	√	√	√	√	√
TAUD1	TAUD1 channel data register 13	TAUD1CDR13	0000_H	16	$FFE2\ 1034_H$	1	16	√	√	√	√	√	√	√	√	√
TAUD1	TAUD1 channel data register 14	TAUD1CDR14	0000_H	16	$FFE2\ 1038_H$	1	16	√	√	√	√	√	√	√	√	√
TAUD1	TAUD1 channel data register 15	TAUD1CDR15	0000_H	16	$FFE2\ 103C_H$	1	16	√	√	√	√	√	√	√	√	√
TAUD1	TAUD1 channel output active level register	TAUD1TOL	0000_H	16	$FFE2\ 1040_H$	1	16	√	√	√	√	√	√	√	√	√
TAUD1	TAUD1 channel reload data trigger register	TAUD1RDT	0000_H	16	$FFE2\ 1044_H$	1	16	√	√	√	√	√	√	√	√	√
TAUD1	TAUD1 channel reload status register	TAUD1RSF	0000_H	16	$FFE2\ 1048_H$	1	16	√	√	√	√	√	√	√	√	√
TAUD1	TAUD1 channel real-time output register	TAUD1TRO	0000_H	16	$FFE2\ 104C_H$	1	16	√	√	√	√	√	√	√	√	√
TAUD1	TAUD1 channel modulation output enable register	TAUD1TME	0000_H	16	$FFE2\ 1050_H$	1	16	√	√	√	√	√	√	√	√	√
TAUD1	TAUD1 channel dead time output level register	TAUD1TDL	0000_H	16	$FFE2\ 1054_H$	1	16	√	√	√	√	√	√	√	√	√
TAUD1	TAUD1 channel output register	TAUD1TO	0000_H	16	$FFE2\ 1058_H$	1	16	√	√	√	√	√	√	√	√	√
TAUD1	TAUD1 channel output enable register	TAUD1TOE	0000_H	16	$FFE2\ 105C_H$	1	16	√	√	√	√	√	√	√	√	√
TAUD1	TAUD1 channel counter register 0	TAUD1CNT0	$FFFF_H$	16	$FFE2\ 1080_H$	1	16	√	√	√	√	√	√	√	√	√
TAUD1	TAUD1 channel counter register 1	TAUD1CNT1	$FFFF_H$	16	$FFE2\ 1084_H$	1	16	√	√	√	√	√	√	√	√	√
TAUD1	TAUD1 channel counter register 2	TAUD1CNT2	$FFFF_H$	16	$FFE2\ 1088_H$	1	16	√	√	√	√	√	√	√	√	√
TAUD1	TAUD1 channel counter register 3	TAUD1CNT3	$FFFF_H$	16	$FFE2\ 108C_H$	1	16	√	√	√	√	√	√	√	√	√
TAUD1	TAUD1 channel counter register 4	TAUD1CNT4	$FFFF_H$	16	$FFE2\ 1090_H$	1	16	√	√	√	√	√	√	√	√	√
TAUD1	TAUD1 channel counter register 5	TAUD1CNT5	$FFFF_H$	16	$FFE2\ 1094_H$	1	16	√	√	√	√	√	√	√	√	√
TAUD1	TAUD1 channel counter register 6	TAUD1CNT6	$FFFF_H$	16	$FFE2\ 1098_H$	1	16	√	√	√	√	√	√	√	√	√
TAUD1	TAUD1 channel counter register 7	TAUD1CNT7	$FFFF_H$	16	$FFE2\ 109C_H$	1	16	√	√	√	√	√	√	√	√	√
TAUD1	TAUD1 channel counter register 8	TAUD1CNT8	$FFFF_H$	16	$FFE2\ 10A0_H$	1	16	√	√	√	√	√	√	√	√	√
TAUD1	TAUD1 channel counter register 9	TAUD1CNT9	$FFFF_H$	16	$FFE2\ 10A4_H$	1	16	√	√	√	√	√	√	√	√	√
TAUD1	TAUD1 channel counter register 10	TAUD1CNT10	$FFFF_H$	16	$FFE2\ 10A8_H$	1	16	√	√	√	√	√	√	√	√	√
TAUD1	TAUD1 channel counter register 11	TAUD1CNT11	$FFFF_H$	16	$FFE2\ 10AC_H$	1	16	√	√	√	√	√	√	√	√	√
TAUD1	TAUD1 channel counter register 12	TAUD1CNT12	$FFFF_H$	16	$FFE2\ 10B0_H$	1	16	√	√	√	√	√	√	√	√	√
TAUD1	TAUD1 channel counter register 13	TAUD1CNT13	$FFFF_H$	16	$FFE2\ 10B4_H$	1	16	√	√	√	√	√	√	√	√	√
TAUD1	TAUD1 channel counter register 14	TAUD1CNT14	$FFFF_H$	16	$FFE2\ 10B8_H$	1	16	√	√	√	√	√	√	√	√	√
TAUD1	TAUD1 channel counter register 15	TAUD1CNT15	$FFFF_H$	16	$FFE2\ 10BC_H$	1	16	√	√	√	√	√	√	√	√	√
TAUD1	TAUD1 channel mode user register 0	TAUD1CMUR0	00_H	8	$FFE2\ 10C0_H$	1	8	√	√	√	√	√	√	√	√	√
TAUD1	TAUD1 channel mode user register 1	TAUD1CMUR1	00_H	8	$FFE2\ 10C4_H$	1	8	√	√	√	√	√	√	√	√	√
TAUD1	TAUD1 channel mode user register 2	TAUD1CMUR2	00_H	8	$FFE2\ 10C8_H$	1	8	√	√	√	√	√	√	√	√	√
TAUD1	TAUD1 channel mode user register 3	TAUD1CMUR3	00_H	8	$FFE2\ 10CC_H$	1	8	√	√	√	√	√	√	√	√	√
TAUD1	TAUD1 channel mode user register 4	TAUD1CMUR4	00_H	8	$FFE2\ 10D0_H$	1	8	√	√	√	√	√	√	√	√	√
TAUD1	TAUD1 channel mode user register 5	TAUD1CMUR5	00_H	8	$FFE2\ 10D4_H$	1	8	√	√	√	√	√	√	√	√	√
TAUD1	TAUD1 channel mode user register 6	TAUD1CMUR6	00_H	8	$FFE2\ 10D8_H$	1	8	√	√	√	√	√	√	√	√	√
TAUD1	TAUD1 channel mode user register 7	TAUD1CMUR7	00_H	8	$FFE2\ 10DC_H$	1	8	√	√	√	√	√	√	√	√	√
TAUD1	TAUD1 channel mode user register 8	TAUD1CMUR8	00_H	8	$FFE2\ 10E0_H$	1	8	√	√	√	√	√	√	√	√	√
TAUD1	TAUD1 channel mode user register 9	TAUD1CMUR9	00_H	8	$FFE2\ 10E4_H$	1	8	√	√	√	√	√	√	√	√	√
TAUD1	TAUD1 channel mode user register 10	TAUD1CMUR10	00_H	8	$FFE2\ 10E8_H$	1	8	√	√	√	√	√	√	√	√	√

Table A.1 List of Registers (51/124)

Module	Register	Symbol	Value after Reset	Number of Bits	Address	Peripheral IP group	Access Size	Reset Source*1							Access Authority*1	
								POCRES	CVMRES	EXTRES	DBRES	ECMRES	BISTRES	SWRES	SV	UM
TAUD1	TAUD1 channel mode user register 11	TAUD1CMUR11	00_H	8	$FFE2\ 10EC_H$	1	8	√	√	√	√	√	√	√	√	√
TAUD1	TAUD1 channel mode user register 12	TAUD1CMUR12	00_H	8	$FFE2\ 10F0_H$	1	8	√	√	√	√	√	√	√	√	√
TAUD1	TAUD1 channel mode user register 13	TAUD1CMUR13	00_H	8	$FFE2\ 10F4_H$	1	8	√	√	√	√	√	√	√	√	√
TAUD1	TAUD1 channel mode user register 14	TAUD1CMUR14	00_H	8	$FFE2\ 10F8_H$	1	8	√	√	√	√	√	√	√	√	√
TAUD1	TAUD1 channel mode user register 15	TAUD1CMUR15	00_H	8	$FFE2\ 10FC_H$	1	8	√	√	√	√	√	√	√	√	√
TAUD1	TAUD1 channel status register 0	TAUD1CSR0	00_H	8	$FFE2\ 1140_H$	1	8	√	√	√	√	√	√	√	√	√
TAUD1	TAUD1 channel status register 1	TAUD1CSR1	00_H	8	$FFE2\ 1144_H$	1	8	√	√	√	√	√	√	√	√	√
TAUD1	TAUD1 channel status register 2	TAUD1CSR2	00_H	8	$FFE2\ 1148_H$	1	8	√	√	√	√	√	√	√	√	√
TAUD1	TAUD1 channel status register 3	TAUD1CSR3	00_H	8	$FFE2\ 114C_H$	1	8	√	√	√	√	√	√	√	√	√
TAUD1	TAUD1 channel status register 4	TAUD1CSR4	00_H	8	$FFE2\ 1150_H$	1	8	√	√	√	√	√	√	√	√	√
TAUD1	TAUD1 channel status register 5	TAUD1CSR5	00_H	8	$FFE2\ 1154_H$	1	8	√	√	√	√	√	√	√	√	√
TAUD1	TAUD1 channel status register 6	TAUD1CSR6	00_H	8	$FFE2\ 1158_H$	1	8	√	√	√	√	√	√	√	√	√
TAUD1	TAUD1 channel status register 7	TAUD1CSR7	00_H	8	$FFE2\ 115C_H$	1	8	√	√	√	√	√	√	√	√	√
TAUD1	TAUD1 channel status register 8	TAUD1CSR8	00_H	8	$FFE2\ 1160_H$	1	8	√	√	√	√	√	√	√	√	√
TAUD1	TAUD1 channel status register 9	TAUD1CSR9	00_H	8	$FFE2\ 1164_H$	1	8	√	√	√	√	√	√	√	√	√
TAUD1	TAUD1 channel status register 10	TAUD1CSR10	00_H	8	$FFE2\ 1168_H$	1	8	√	√	√	√	√	√	√	√	√
TAUD1	TAUD1 channel status register 11	TAUD1CSR11	00_H	8	$FFE2\ 116C_H$	1	8	√	√	√	√	√	√	√	√	√
TAUD1	TAUD1 channel status register 12	TAUD1CSR12	00_H	8	$FFE2\ 1170_H$	1	8	√	√	√	√	√	√	√	√	√
TAUD1	TAUD1 channel status register 13	TAUD1CSR13	00_H	8	$FFE2\ 1174_H$	1	8	√	√	√	√	√	√	√	√	√
TAUD1	TAUD1 channel status register 14	TAUD1CSR14	00_H	8	$FFE2\ 1178_H$	1	8	√	√	√	√	√	√	√	√	√
TAUD1	TAUD1 channel status register 15	TAUD1CSR15	00_H	8	$FFE2\ 117C_H$	1	8	√	√	√	√	√	√	√	√	√
TAUD1	TAUD1 Channel Status Clear Trigger Register 0	TAUD1CSC0	00_H	8	$FFE2\ 1180_H$	1	8	√	√	√	√	√	√	√	√	√
TAUD1	TAUD1 Channel Status Clear Trigger Register 1	TAUD1CSC1	00_H	8	$FFE2\ 1184_H$	1	8	√	√	√	√	√	√	√	√	√
TAUD1	TAUD1 Channel Status Clear Trigger Register 2	TAUD1CSC2	00_H	8	$FFE2\ 1188_H$	1	8	√	√	√	√	√	√	√	√	√
TAUD1	TAUD1 Channel Status Clear Trigger Register 3	TAUD1CSC3	00_H	8	$FFE2\ 118C_H$	1	8	√	√	√	√	√	√	√	√	√
TAUD1	TAUD1 Channel Status Clear Trigger Register 4	TAUD1CSC4	00_H	8	$FFE2\ 1190_H$	1	8	√	√	√	√	√	√	√	√	√
TAUD1	TAUD1 Channel Status Clear Trigger Register 5	TAUD1CSC5	00_H	8	$FFE2\ 1194_H$	1	8	√	√	√	√	√	√	√	√	√
TAUD1	TAUD1 Channel Status Clear Trigger Register 6	TAUD1CSC6	00_H	8	$FFE2\ 1198_H$	1	8	√	√	√	√	√	√	√	√	√
TAUD1	TAUD1 Channel Status Clear Trigger Register 7	TAUD1CSC7	00_H	8	$FFE2\ 119C_H$	1	8	√	√	√	√	√	√	√	√	√
TAUD1	TAUD1 Channel Status Clear Trigger Register 8	TAUD1CSC8	00_H	8	$FFE2\ 11A0_H$	1	8	√	√	√	√	√	√	√	√	√
TAUD1	TAUD1 Channel Status Clear Trigger Register 9	TAUD1CSC9	00_H	8	$FFE2\ 11A4_H$	1	8	√	√	√	√	√	√	√	√	√
TAUD1	TAUD1 Channel Status Clear Trigger Register 10	TAUD1CSC10	00_H	8	$FFE2\ 11A8_H$	1	8	√	√	√	√	√	√	√	√	√
TAUD1	TAUD1 Channel Status Clear Trigger Register 11	TAUD1CSC11	00_H	8	$FFE2\ 11AC_H$	1	8	√	√	√	√	√	√	√	√	√
TAUD1	TAUD1 Channel Status Clear Trigger Register 12	TAUD1CSC12	00_H	8	$FFE2\ 11B0_H$	1	8	√	√	√	√	√	√	√	√	√
TAUD1	TAUD1 Channel Status Clear Trigger Register 13	TAUD1CSC13	00_H	8	$FFE2\ 11B4_H$	1	8	√	√	√	√	√	√	√	√	√
TAUD1	TAUD1 Channel Status Clear Trigger Register 14	TAUD1CSC14	00_H	8	$FFE2\ 11B8_H$	1	8	√	√	√	√	√	√	√	√	√
TAUD1	TAUD1 Channel Status Clear Trigger Register 15	TAUD1CSC15	00_H	8	$FFE2\ 11BC_H$	1	8	√	√	√	√	√	√	√	√	√
TAUD1	TAUD1 channel enable status register	TAUD1TE	0000_H	16	$FFE2\ 11C0_H$	1	16	√	√	√	√	√	√	√	√	√
TAUD1	TAUD1 channel start trigger register	TAUD1TS	0000_H	16	$FFE2\ 11C4_H$	1	16	√	√	√	√	√	√	√	√	√
TAUD1	TAUD1 channel stop trigger register	TAUD1TT	0000_H	16	$FFE2\ 11C8_H$	1	16	√	√	√	√	√	√	√	√	√
TAUD1	TAUD1 channel mode OS register 0	TAUD1CMOR0	0000_H	16	$FFE2\ 1200_H$	1	16	√	√	√	√	√	√	√	√	√
TAUD1	TAUD1 channel mode OS register 1	TAUD1CMOR1	0000_H	16	$FFE2\ 1204_H$	1	16	√	√	√	√	√	√	√	√	√
TAUD1	TAUD1 channel mode OS register 2	TAUD1CMOR2	0000_H	16	$FFE2\ 1208_H$	1	16	√	√	√	√	√	√	√	√	√
TAUD1	TAUD1 channel mode OS register 3	TAUD1CMOR3	0000_H	16	$FFE2\ 120C_H$	1	16	√	√	√	√	√	√	√	√	√
TAUD1	TAUD1 channel mode OS register 4	TAUD1CMOR4	0000_H	16	$FFE2\ 1210_H$	1	16	√	√	√	√	√	√	√	√	√
TAUD1	TAUD1 channel mode OS register 5	TAUD1CMOR5	0000_H	16	$FFE2\ 1214_H$	1	16	√	√	√	√	√	√	√	√	√
TAUD1	TAUD1 channel mode OS register 6	TAUD1CMOR6	0000_H	16	$FFE2\ 1218_H$	1	16	√	√	√	√	√	√	√	√	√
TAUD1	TAUD1 channel mode OS register 7	TAUD1CMOR7	0000_H	16	$FFE2\ 121C_H$	1	16	√	√	√	√	√	√	√	√	√
TAUD1	TAUD1 channel mode OS register 8	TAUD1CMOR8	0000_H	16	$FFE2\ 1220_H$	1	16	√	√	√	√	√	√	√	√	√
TAUD1	TAUD1 channel mode OS register 9	TAUD1CMOR9	0000_H	16	$FFE2\ 1224_H$	1	16	√	√	√	√	√	√	√	√	√
TAUD1	TAUD1 channel mode OS register 10	TAUD1CMOR10	0000_H	16	$FFE2\ 1228_H$	1	16	√	√	√	√	√	√	√	√	√
TAUD1	TAUD1 channel mode OS register 11	TAUD1CMOR11	0000_H	16	$FFE2\ 122C_H$	1	16	√	√	√	√	√	√	√	√	√
TAUD1	TAUD1 channel mode OS register 12	TAUD1CMOR12	0000_H	16	$FFE2\ 1230_H$	1	16	√	√	√	√	√	√	√	√	√

Table A.1 List of Registers (52/124)

Module	Register	Symbol	Value after Reset	Number of Bits	Address	Peripheral IP group	Access Size	Reset Source*1							Access Authority*1	
								POCRES	CVMRES	EXTRES	DBRES	ECMRES	BISTRES	SWRES	SV	UM
TAUD1	TAUD1 channel mode OS register 13	TAUD1CMOR13	0000_H	16	$FFE2\ 1234_H$	1	16	√	√	√	√	√	√	√	√	√
TAUD1	TAUD1 channel mode OS register 14	TAUD1CMOR14	0000_H	16	$FFE2\ 1238_H$	1	16	√	√	√	√	√	√	√	√	√
TAUD1	TAUD1 channel mode OS register 15	TAUD1CMOR15	0000_H	16	$FFE2\ 123C_H$	1	16	√	√	√	√	√	√	√	√	√
TAUD1	TAUD1 prescaler clock select register	TAUD1TPS	$FFFF_H$	16	$FFE2\ 1240_H$	1	16	√	√	√	√	√	√	√	√	√
TAUD1	TAUD1 prescaler baud rate setting register	TAUD1BRS	00_H	8	$FFE2\ 1244_H$	1	8	√	√	√	√	√	√	√	√	√
TAUD1	TAUD1 channel output mode register	TAUD1TOM	0000_H	16	$FFE2\ 1248_H$	1	16	√	√	√	√	√	√	√	√	√
TAUD1	TAUD1 channel output configuration register	TAUD1TOC	0000_H	16	$FFE2\ 124C_H$	1	16	√	√	√	√	√	√	√	√	√
TAUD1	TAUD1 channel dead time output enable register	TAUD1TDE	0000_H	16	$FFE2\ 1250_H$	1	16	√	√	√	√	√	√	√	√	√
TAUD1	TAUD1 channel dead time output mode register	TAUD1TDM	0000_H	16	$FFE2\ 1254_H$	1	16	√	√	√	√	√	√	√	√	√
TAUD1	TAUD1 channel real-time output enable register	TAUD1TRE	0000_H	16	$FFE2\ 1258_H$	1	16	√	√	√	√	√	√	√	√	√
TAUD1	TAUD1 channel real-time output control register	TAUD1TRC	0000_H	16	$FFE2\ 125C_H$	1	16	√	√	√	√	√	√	√	√	√
TAUD1	TAUD1 channel reload data enable register	TAUD1RDE	0000_H	16	$FFE2\ 1260_H$	1	16	√	√	√	√	√	√	√	√	√
TAUD1	TAUD1 channel reload data mode register	TAUD1RDM	0000_H	16	$FFE2\ 1264_H$	1	16	√	√	√	√	√	√	√	√	√
TAUD1	TAUD1 channel reload data control CH select register	TAUD1RDS	0000_H	16	$FFE2\ 1268_H$	1	16	√	√	√	√	√	√	√	√	√
TAUD1	TAUD1 channel reload data control register	TAUD1RDC	0000_H	16	$FFE2\ 126C_H$	1	16	√	√	√	√	√	√	√	√	√
TAUD2	TAUD2 channel data register 0	TAUD2CDR0	0000_H	16	$FFE2\ 2000_H$	1	16	√	√	√	√	√	√	√	√	√
TAUD2	TAUD2 channel data register 1	TAUD2CDR1	0000_H	16	$FFE2\ 2004_H$	1	16	√	√	√	√	√	√	√	√	√
TAUD2	TAUD2 channel data register 2	TAUD2CDR2	0000_H	16	$FFE2\ 2008_H$	1	16	√	√	√	√	√	√	√	√	√
TAUD2	TAUD2 channel data register 3	TAUD2CDR3	0000_H	16	$FFE2\ 200C_H$	1	16	√	√	√	√	√	√	√	√	√
TAUD2	TAUD2 channel data register 4	TAUD2CDR4	0000_H	16	$FFE2\ 2010_H$	1	16	√	√	√	√	√	√	√	√	√
TAUD2	TAUD2 channel data register 5	TAUD2CDR5	0000_H	16	$FFE2\ 2014_H$	1	16	√	√	√	√	√	√	√	√	√
TAUD2	TAUD2 channel data register 6	TAUD2CDR6	0000_H	16	$FFE2\ 2018_H$	1	16	√	√	√	√	√	√	√	√	√
TAUD2	TAUD2 channel data register 7	TAUD2CDR7	0000_H	16	$FFE2\ 201C_H$	1	16	√	√	√	√	√	√	√	√	√
TAUD2	TAUD2 channel data register 8	TAUD2CDR8	0000_H	16	$FFE2\ 2020_H$	1	16	√	√	√	√	√	√	√	√	√
TAUD2	TAUD2 channel data register 9	TAUD2CDR9	0000_H	16	$FFE2\ 2024_H$	1	16	√	√	√	√	√	√	√	√	√
TAUD2	TAUD2 channel data register 10	TAUD2CDR10	0000_H	16	$FFE2\ 2028_H$	1	16	√	√	√	√	√	√	√	√	√
TAUD2	TAUD2 channel data register 11	TAUD2CDR11	0000_H	16	$FFE2\ 202C_H$	1	16	√	√	√	√	√	√	√	√	√
TAUD2	TAUD2 channel data register 12	TAUD2CDR12	0000_H	16	$FFE2\ 2030_H$	1	16	√	√	√	√	√	√	√	√	√
TAUD2	TAUD2 channel data register 13	TAUD2CDR13	0000_H	16	$FFE2\ 2034_H$	1	16	√	√	√	√	√	√	√	√	√
TAUD2	TAUD2 channel data register 14	TAUD2CDR14	0000_H	16	$FFE2\ 2038_H$	1	16	√	√	√	√	√	√	√	√	√
TAUD2	TAUD2 channel data register 15	TAUD2CDR15	0000_H	16	$FFE2\ 203C_H$	1	16	√	√	√	√	√	√	√	√	√
TAUD2	TAUD2 channel output active level register	TAUD2TOL	0000_H	16	$FFE2\ 2040_H$	1	16	√	√	√	√	√	√	√	√	√
TAUD2	TAUD2 channel reload data trigger register	TAUD2RDT	0000_H	16	$FFE2\ 2044_H$	1	16	√	√	√	√	√	√	√	√	√
TAUD2	TAUD2 channel reload status register	TAUD2RSF	0000_H	16	$FFE2\ 2048_H$	1	16	√	√	√	√	√	√	√	√	√
TAUD2	TAUD2 channel real-time output register	TAUD2TRO	0000_H	16	$FFE2\ 204C_H$	1	16	√	√	√	√	√	√	√	√	√
TAUD2	TAUD2 channel modulation output enable register	TAUD2TME	0000_H	16	$FFE2\ 2050_H$	1	16	√	√	√	√	√	√	√	√	√
TAUD2	TAUD2 channel dead time output level register	TAUD2TDL	0000_H	16	$FFE2\ 2054_H$	1	16	√	√	√	√	√	√	√	√	√
TAUD2	TAUD2 channel output register	TAUD2TO	0000_H	16	$FFE2\ 2058_H$	1	16	√	√	√	√	√	√	√	√	√
TAUD2	TAUD2 channel output enable register	TAUD2TOE	0000_H	16	$FFE2\ 205C_H$	1	16	√	√	√	√	√	√	√	√	√
TAUD2	TAUD2 channel counter register 0	TAUD2CNT0	$FFFF_H$	16	$FFE2\ 2080_H$	1	16	√	√	√	√	√	√	√	√	√
TAUD2	TAUD2 channel counter register 1	TAUD2CNT1	$FFFF_H$	16	$FFE2\ 2084_H$	1	16	√	√	√	√	√	√	√	√	√
TAUD2	TAUD2 channel counter register 2	TAUD2CNT2	$FFFF_H$	16	$FFE2\ 2088_H$	1	16	√	√	√	√	√	√	√	√	√
TAUD2	TAUD2 channel counter register 3	TAUD2CNT3	$FFFF_H$	16	$FFE2\ 208C_H$	1	16	√	√	√	√	√	√	√	√	√
TAUD2	TAUD2 channel counter register 4	TAUD2CNT4	$FFFF_H$	16	$FFE2\ 2090_H$	1	16	√	√	√	√	√	√	√	√	√
TAUD2	TAUD2 channel counter register 5	TAUD2CNT5	$FFFF_H$	16	$FFE2\ 2094_H$	1	16	√	√	√	√	√	√	√	√	√
TAUD2	TAUD2 channel counter register 6	TAUD2CNT6	$FFFF_H$	16	$FFE2\ 2098_H$	1	16	√	√	√	√	√	√	√	√	√
TAUD2	TAUD2 channel counter register 7	TAUD2CNT7	$FFFF_H$	16	$FFE2\ 209C_H$	1	16	√	√	√	√	√	√	√	√	√
TAUD2	TAUD2 channel counter register 8	TAUD2CNT8	$FFFF_H$	16	$FFE2\ 20A0_H$	1	16	√	√	√	√	√	√	√	√	√
TAUD2	TAUD2 channel counter register 9	TAUD2CNT9	$FFFF_H$	16	$FFE2\ 20A4_H$	1	16	√	√	√	√	√	√	√	√	√
TAUD2	TAUD2 channel counter register 10	TAUD2CNT10	$FFFF_H$	16	$FFE2\ 20A8_H$	1	16	√	√	√	√	√	√	√	√	√
TAUD2	TAUD2 channel counter register 11	TAUD2CNT11	$FFFF_H$	16	$FFE2\ 20AC_H$	1	16	√	√	√	√	√	√	√	√	√
TAUD2	TAUD2 channel counter register 12	TAUD2CNT12	$FFFF_H$	16	$FFE2\ 20B0_H$	1	16	√	√	√	√	√	√	√	√	√
TAUD2	TAUD2 channel counter register 13	TAUD2CNT13	$FFFF_H$	16	$FFE2\ 20B4_H$	1	16	√	√	√	√	√	√	√	√	√

Table A.1 List of Registers (53/124)

Module	Register	Symbol	Value after Reset	Number of Bits	Address	Peripheral IP group	Access Size	Reset Source*1							Access Authority*1	
								POCRES	CVMRES	EXTRES	DBRES	ECMRES	BISTRES	SWRES	SV	UM
TAUD2	TAUD2 channel counter register 14	TAUD2CNT14	$FFFF_H$	16	$FFE2\ 20B8_H$	1	16	√	√	√	√	√	√	√	√	√
TAUD2	TAUD2 channel counter register 15	TAUD2CNT15	$FFFF_H$	16	$FFE2\ 20BC_H$	1	16	√	√	√	√	√	√	√	√	√
TAUD2	TAUD2 channel mode user register 0	TAUD2CMUR0	00_H	8	$FFE2\ 20C0_H$	1	8	√	√	√	√	√	√	√	√	√
TAUD2	TAUD2 channel mode user register 1	TAUD2CMUR1	00_H	8	$FFE2\ 20C4_H$	1	8	√	√	√	√	√	√	√	√	√
TAUD2	TAUD2 channel mode user register 2	TAUD2CMUR2	00_H	8	$FFE2\ 20C8_H$	1	8	√	√	√	√	√	√	√	√	√
TAUD2	TAUD2 channel mode user register 3	TAUD2CMUR3	00_H	8	$FFE2\ 20CC_H$	1	8	√	√	√	√	√	√	√	√	√
TAUD2	TAUD2 channel mode user register 4	TAUD2CMUR4	00_H	8	$FFE2\ 20D0_H$	1	8	√	√	√	√	√	√	√	√	√
TAUD2	TAUD2 channel mode user register 5	TAUD2CMUR5	00_H	8	$FFE2\ 20D4_H$	1	8	√	√	√	√	√	√	√	√	√
TAUD2	TAUD2 channel mode user register 6	TAUD2CMUR6	00_H	8	$FFE2\ 20D8_H$	1	8	√	√	√	√	√	√	√	√	√
TAUD2	TAUD2 channel mode user register 7	TAUD2CMUR7	00_H	8	$FFE2\ 20DC_H$	1	8	√	√	√	√	√	√	√	√	√
TAUD2	TAUD2 channel mode user register 8	TAUD2CMUR8	00_H	8	$FFE2\ 20E0_H$	1	8	√	√	√	√	√	√	√	√	√
TAUD2	TAUD2 channel mode user register 9	TAUD2CMUR9	00_H	8	$FFE2\ 20E4_H$	1	8	√	√	√	√	√	√	√	√	√
TAUD2	TAUD2 channel mode user register 10	TAUD2CMUR10	00_H	8	$FFE2\ 20E8_H$	1	8	√	√	√	√	√	√	√	√	√
TAUD2	TAUD2 channel mode user register 11	TAUD2CMUR11	00_H	8	$FFE2\ 20EC_H$	1	8	√	√	√	√	√	√	√	√	√
TAUD2	TAUD2 channel mode user register 12	TAUD2CMUR12	00_H	8	$FFE2\ 20F0_H$	1	8	√	√	√	√	√	√	√	√	√
TAUD2	TAUD2 channel mode user register 13	TAUD2CMUR13	00_H	8	$FFE2\ 20F4_H$	1	8	√	√	√	√	√	√	√	√	√
TAUD2	TAUD2 channel mode user register 14	TAUD2CMUR14	00_H	8	$FFE2\ 20F8_H$	1	8	√	√	√	√	√	√	√	√	√
TAUD2	TAUD2 channel mode user register 15	TAUD2CMUR15	00_H	8	$FFE2\ 20FC_H$	1	8	√	√	√	√	√	√	√	√	√
TAUD2	TAUD2 channel status register 0	TAUD2CSR0	00_H	8	$FFE2\ 2140_H$	1	8	√	√	√	√	√	√	√	√	√
TAUD2	TAUD2 channel status register 1	TAUD2CSR1	00_H	8	$FFE2\ 2144_H$	1	8	√	√	√	√	√	√	√	√	√
TAUD2	TAUD2 channel status register 2	TAUD2CSR2	00_H	8	$FFE2\ 2148_H$	1	8	√	√	√	√	√	√	√	√	√
TAUD2	TAUD2 channel status register 3	TAUD2CSR3	00_H	8	$FFE2\ 214C_H$	1	8	√	√	√	√	√	√	√	√	√
TAUD2	TAUD2 channel status register 4	TAUD2CSR4	00_H	8	$FFE2\ 2150_H$	1	8	√	√	√	√	√	√	√	√	√
TAUD2	TAUD2 channel status register 5	TAUD2CSR5	00_H	8	$FFE2\ 2154_H$	1	8	√	√	√	√	√	√	√	√	√
TAUD2	TAUD2 channel status register 6	TAUD2CSR6	00_H	8	$FFE2\ 2158_H$	1	8	√	√	√	√	√	√	√	√	√
TAUD2	TAUD2 channel status register 7	TAUD2CSR7	00_H	8	$FFE2\ 215C_H$	1	8	√	√	√	√	√	√	√	√	√
TAUD2	TAUD2 channel status register 8	TAUD2CSR8	00_H	8	$FFE2\ 2160_H$	1	8	√	√	√	√	√	√	√	√	√
TAUD2	TAUD2 channel status register 9	TAUD2CSR9	00_H	8	$FFE2\ 2164_H$	1	8	√	√	√	√	√	√	√	√	√
TAUD2	TAUD2 channel status register 10	TAUD2CSR10	00_H	8	$FFE2\ 2168_H$	1	8	√	√	√	√	√	√	√	√	√
TAUD2	TAUD2 channel status register 11	TAUD2CSR11	00_H	8	$FFE2\ 216C_H$	1	8	√	√	√	√	√	√	√	√	√
TAUD2	TAUD2 channel status register 12	TAUD2CSR12	00_H	8	$FFE2\ 2170_H$	1	8	√	√	√	√	√	√	√	√	√
TAUD2	TAUD2 channel status register 13	TAUD2CSR13	00_H	8	$FFE2\ 2174_H$	1	8	√	√	√	√	√	√	√	√	√
TAUD2	TAUD2 channel status register 14	TAUD2CSR14	00_H	8	$FFE2\ 2178_H$	1	8	√	√	√	√	√	√	√	√	√
TAUD2	TAUD2 channel status register 15	TAUD2CSR15	00_H	8	$FFE2\ 217C_H$	1	8	√	√	√	√	√	√	√	√	√
TAUD2	TAUD2 Channel Status Clear Trigger Register 0	TAUD2CSC0	00_H	8	$FFE2\ 2180_H$	1	8	√	√	√	√	√	√	√	√	√
TAUD2	TAUD2 Channel Status Clear Trigger Register 1	TAUD2CSC1	00_H	8	$FFE2\ 2184_H$	1	8	√	√	√	√	√	√	√	√	√
TAUD2	TAUD2 Channel Status Clear Trigger Register 2	TAUD2CSC2	00_H	8	$FFE2\ 2188_H$	1	8	√	√	√	√	√	√	√	√	√
TAUD2	TAUD2 Channel Status Clear Trigger Register 3	TAUD2CSC3	00_H	8	$FFE2\ 218C_H$	1	8	√	√	√	√	√	√	√	√	√
TAUD2	TAUD2 Channel Status Clear Trigger Register 4	TAUD2CSC4	00_H	8	$FFE2\ 2190_H$	1	8	√	√	√	√	√	√	√	√	√
TAUD2	TAUD2 Channel Status Clear Trigger Register 5	TAUD2CSC5	00_H	8	$FFE2\ 2194_H$	1	8	√	√	√	√	√	√	√	√	√
TAUD2	TAUD2 Channel Status Clear Trigger Register 6	TAUD2CSC6	00_H	8	$FFE2\ 2198_H$	1	8	√	√	√	√	√	√	√	√	√
TAUD2	TAUD2 Channel Status Clear Trigger Register 7	TAUD2CSC7	00_H	8	$FFE2\ 219C_H$	1	8	√	√	√	√	√	√	√	√	√
TAUD2	TAUD2 Channel Status Clear Trigger Register 8	TAUD2CSC8	00_H	8	$FFE2\ 21A0_H$	1	8	√	√	√	√	√	√	√	√	√
TAUD2	TAUD2 Channel Status Clear Trigger Register 9	TAUD2CSC9	00_H	8	$FFE2\ 21A4_H$	1	8	√	√	√	√	√	√	√	√	√
TAUD2	TAUD2 Channel Status Clear Trigger Register 10	TAUD2CSC10	00_H	8	$FFE2\ 21A8_H$	1	8	√	√	√	√	√	√	√	√	√
TAUD2	TAUD2 Channel Status Clear Trigger Register 11	TAUD2CSC11	00_H	8	$FFE2\ 21AC_H$	1	8	√	√	√	√	√	√	√	√	√
TAUD2	TAUD2 Channel Status Clear Trigger Register 12	TAUD2CSC12	00_H	8	$FFE2\ 21B0_H$	1	8	√	√	√	√	√	√	√	√	√
TAUD2	TAUD2 Channel Status Clear Trigger Register 13	TAUD2CSC13	00_H	8	$FFE2\ 21B4_H$	1	8	√	√	√	√	√	√	√	√	√
TAUD2	TAUD2 Channel Status Clear Trigger Register 14	TAUD2CSC14	00_H	8	$FFE2\ 21B8_H$	1	8	√	√	√	√	√	√	√	√	√
TAUD2	TAUD2 Channel Status Clear Trigger Register 15	TAUD2CSC15	00_H	8	$FFE2\ 21BC_H$	1	8	√	√	√	√	√	√	√	√	√
TAUD2	TAUD2 channel enable status register	TAUD2TE	0000_H	16	$FFE2\ 21C0_H$	1	16	√	√	√	√	√	√	√	√	√
TAUD2	TAUD2 channel start trigger register	TAUD2TS	0000_H	16	$FFE2\ 21C4_H$	1	16	√	√	√	√	√	√	√	√	√
TAUD2	TAUD2 channel stop trigger register	TAUD2TT	0000_H	16	$FFE2\ 21C8_H$	1	16	√	√	√	√	√	√	√	√	√

Table A.1 List of Registers (54/124)

Module	Register	Symbol	Value after Reset	Number of Bits	Address	Peripheral IP group	Access Size	Reset Source*1							Access Authority*1	
								POCRES	CVMRES	EXTRES	DBRES	ECMRES	BISTRES	SWRES	SV	UM
TAUD2	TAUD2 channel mode OS register 0	TAUD2CMOR0	0000_H	16	$FFE2\ 2200_H$	1	16	√	√	√	√	√	√	√	√	√
TAUD2	TAUD2 channel mode OS register 1	TAUD2CMOR1	0000_H	16	$FFE2\ 2204_H$	1	16	√	√	√	√	√	√	√	√	√
TAUD2	TAUD2 channel mode OS register 2	TAUD2CMOR2	0000_H	16	$FFE2\ 2208_H$	1	16	√	√	√	√	√	√	√	√	√
TAUD2	TAUD2 channel mode OS register 3	TAUD2CMOR3	0000_H	16	$FFE2\ 220C_H$	1	16	√	√	√	√	√	√	√	√	√
TAUD2	TAUD2 channel mode OS register 4	TAUD2CMOR4	0000_H	16	$FFE2\ 2210_H$	1	16	√	√	√	√	√	√	√	√	√
TAUD2	TAUD2 channel mode OS register 5	TAUD2CMOR5	0000_H	16	$FFE2\ 2214_H$	1	16	√	√	√	√	√	√	√	√	√
TAUD2	TAUD2 channel mode OS register 6	TAUD2CMOR6	0000_H	16	$FFE2\ 2218_H$	1	16	√	√	√	√	√	√	√	√	√
TAUD2	TAUD2 channel mode OS register 7	TAUD2CMOR7	0000_H	16	$FFE2\ 221C_H$	1	16	√	√	√	√	√	√	√	√	√
TAUD2	TAUD2 channel mode OS register 8	TAUD2CMOR8	0000_H	16	$FFE2\ 2220_H$	1	16	√	√	√	√	√	√	√	√	√
TAUD2	TAUD2 channel mode OS register 9	TAUD2CMOR9	0000_H	16	$FFE2\ 2224_H$	1	16	√	√	√	√	√	√	√	√	√
TAUD2	TAUD2 channel mode OS register 10	TAUD2CMOR10	0000_H	16	$FFE2\ 2228_H$	1	16	√	√	√	√	√	√	√	√	√
TAUD2	TAUD2 channel mode OS register 11	TAUD2CMOR11	0000_H	16	$FFE2\ 222C_H$	1	16	√	√	√	√	√	√	√	√	√
TAUD2	TAUD2 channel mode OS register 12	TAUD2CMOR12	0000_H	16	$FFE2\ 2230_H$	1	16	√	√	√	√	√	√	√	√	√
TAUD2	TAUD2 channel mode OS register 13	TAUD2CMOR13	0000_H	16	$FFE2\ 2234_H$	1	16	√	√	√	√	√	√	√	√	√
TAUD2	TAUD2 channel mode OS register 14	TAUD2CMOR14	0000_H	16	$FFE2\ 2238_H$	1	16	√	√	√	√	√	√	√	√	√
TAUD2	TAUD2 channel mode OS register 15	TAUD2CMOR15	0000_H	16	$FFE2\ 223C_H$	1	16	√	√	√	√	√	√	√	√	√
TAUD2	TAUD2 prescaler clock select register	TAUD2TPS	$FFFF_H$	16	$FFE2\ 2240_H$	1	16	√	√	√	√	√	√	√	√	√
TAUD2	TAUD2 prescaler baud rate setting register	TAUD2BRS	00_H	8	$FFE2\ 2244_H$	1	8	√	√	√	√	√	√	√	√	√
TAUD2	TAUD2 channel output mode register	TAUD2TOM	0000_H	16	$FFE2\ 2248_H$	1	16	√	√	√	√	√	√	√	√	√
TAUD2	TAUD2 channel output configuration register	TAUD2TOC	0000_H	16	$FFE2\ 224C_H$	1	16	√	√	√	√	√	√	√	√	√
TAUD2	TAUD2 channel dead time output enable register	TAUD2TDE	0000_H	16	$FFE2\ 2250_H$	1	16	√	√	√	√	√	√	√	√	√
TAUD2	TAUD2 channel dead time output mode register	TAUD2TDM	0000_H	16	$FFE2\ 2254_H$	1	16	√	√	√	√	√	√	√	√	√
TAUD2	TAUD2 channel real-time output enable register	TAUD2TRE	0000_H	16	$FFE2\ 2258_H$	1	16	√	√	√	√	√	√	√	√	√
TAUD2	TAUD2 channel real-time output control register	TAUD2TRC	0000_H	16	$FFE2\ 225C_H$	1	16	√	√	√	√	√	√	√	√	√
TAUD2	TAUD2 channel reload data enable register	TAUD2RDE	0000_H	16	$FFE2\ 2260_H$	1	16	√	√	√	√	√	√	√	√	√
TAUD2	TAUD2 channel reload data mode register	TAUD2RDM	0000_H	16	$FFE2\ 2264_H$	1	16	√	√	√	√	√	√	√	√	√
TAUD2	TAUD2 channel reload data control CH select register	TAUD2RDS	0000_H	16	$FFE2\ 2268_H$	1	16	√	√	√	√	√	√	√	√	√
TAUD2	TAUD2 channel reload data control register	TAUD2RDC	0000_H	16	$FFE2\ 226C_H$	1	16	√	√	√	√	√	√	√	√	√
TAUJ0	TAUJ0 channel data register 0	TAUJ0CDR0	$0000\ 0000_H$	32	$FFE5\ 0000_H$	1	32	√	√	√	√	√	√	√	√	√
TAUJ0	TAUJ0 channel data register 1	TAUJ0CDR1	$0000\ 0000_H$	32	$FFE5\ 0004_H$	1	32	√	√	√	√	√	√	√	√	√
TAUJ0	TAUJ0 channel data register 2	TAUJ0CDR2	$0000\ 0000_H$	32	$FFE5\ 0008_H$	1	32	√	√	√	√	√	√	√	√	√
TAUJ0	TAUJ0 channel data register 3	TAUJ0CDR3	$0000\ 0000_H$	32	$FFE5\ 000C_H$	1	32	√	√	√	√	√	√	√	√	√
TAUJ0	TAUJ0 channel counter register 0	TAUJ0CNT0	$FFFF\ FFFF_H$	32	$FFE5\ 0010_H$	1	32	√	√	√	√	√	√	√	√	√
TAUJ0	TAUJ0 channel counter register 1	TAUJ0CNT1	$FFFF\ FFFF_H$	32	$FFE5\ 0014_H$	1	32	√	√	√	√	√	√	√	√	√
TAUJ0	TAUJ0 channel counter register 2	TAUJ0CNT2	$FFFF\ FFFF_H$	32	$FFE5\ 0018_H$	1	32	√	√	√	√	√	√	√	√	√
TAUJ0	TAUJ0 channel counter register 3	TAUJ0CNT3	$FFFF\ FFFF_H$	32	$FFE5\ 001C_H$	1	32	√	√	√	√	√	√	√	√	√
TAUJ0	TAUJ0 channel mode user register 0	TAUJ0CMUR0	00_H	8	$FFE5\ 0020_H$	1	8	√	√	√	√	√	√	√	√	√
TAUJ0	TAUJ0 channel mode user register 1	TAUJ0CMUR1	00_H	8	$FFE5\ 0024_H$	1	8	√	√	√	√	√	√	√	√	√
TAUJ0	TAUJ0 channel mode user register 2	TAUJ0CMUR2	00_H	8	$FFE5\ 0028_H$	1	8	√	√	√	√	√	√	√	√	√
TAUJ0	TAUJ0 channel mode user register 3	TAUJ0CMUR3	00_H	8	$FFE5\ 002C_H$	1	8	√	√	√	√	√	√	√	√	√
TAUJ0	TAUJ0 channel status register 0	TAUJ0CSR0	00_H	8	$FFE5\ 0030_H$	1	8	√	√	√	√	√	√	√	√	√
TAUJ0	TAUJ0 channel status register 1	TAUJ0CSR1	00_H	8	$FFE5\ 0034_H$	1	8	√	√	√	√	√	√	√	√	√
TAUJ0	TAUJ0 channel status register 2	TAUJ0CSR2	00_H	8	$FFE5\ 0038_H$	1	8	√	√	√	√	√	√	√	√	√
TAUJ0	TAUJ0 channel status register 3	TAUJ0CSR3	00_H	8	$FFE5\ 003C_H$	1	8	√	√	√	√	√	√	√	√	√
TAUJ0	TAUJ0 Channel Status Clear Trigger Register 0	TAUJ0CSC0	00_H	8	$FFE5\ 0040_H$	1	8	√	√	√	√	√	√	√	√	√
TAUJ0	TAUJ0 Channel Status Clear Trigger Register 1	TAUJ0CSC1	00_H	8	$FFE5\ 0044_H$	1	8	√	√	√	√	√	√	√	√	√
TAUJ0	TAUJ0 Channel Status Clear Trigger Register 2	TAUJ0CSC2	00_H	8	$FFE5\ 0048_H$	1	8	√	√	√	√	√	√	√	√	√
TAUJ0	TAUJ0 Channel Status Clear Trigger Register 3	TAUJ0CSC3	00_H	8	$FFE5\ 004C_H$	1	8	√	√	√	√	√	√	√	√	√
TAUJ0	TAUJ0 channel enable status register	TAUJ0TE	00_H	8	$FFE5\ 0050_H$	1	8	√	√	√	√	√	√	√	√	√
TAUJ0	TAUJ0 channel start trigger register	TAUJ0TS	00_H	8	$FFE5\ 0054_H$	1	8	√	√	√	√	√	√	√	√	√
TAUJ0	TAUJ0 channel stop trigger register	TAUJ0TT	00_H	8	$FFE5\ 0058_H$	1	8	√	√	√	√	√	√	√	√	√
TAUJ0	TAUJ0 channel output register	TAUJ0TO	00_H	8	$FFE5\ 005C_H$	1	8	√	√	√	√	√	√	√	√	√
TAUJ0	TAUJ0 channel output enable register	TAUJ0TOE	00_H	8	$FFE5\ 0060_H$	1	8	√	√	√	√	√	√	√	√	√

Table A.1 List of Registers (55/124)

Module	Register	Symbol	Value after Reset	Number of Bits	Address	Peripheral IP group	Access Size	Reset Source*1							Access Authority*1	
								POCRES	CVMRES	EXTRES	DBRES	ECMRES	BISTRES	SWRES	SV	UM
TAUJ0	TAUJ0 channel output active level register	TAUJ0TOL	00_H	8	$FFE5\ 0064_H$	1	8	√	√	√	√	√	√	√	√	√
TAUJ0	TAUJ0 channel reload data trigger register	TAUJ0RDT	00_H	8	$FFE5\ 0068_H$	1	8	√	√	√	√	√	√	√	√	√
TAUJ0	TAUJ0 channel reload status register	TAUJ0RSF	00_H	8	$FFE5\ 006C_H$	1	8	√	√	√	√	√	√	√	√	√
TAUJ0	TAUJ0 channel mode OS register 0	TAUJ0CMOR0	0000_H	16	$FFE5\ 0080_H$	1	16	√	√	√	√	√	√	√	√	√
TAUJ0	TAUJ0 channel mode OS register 1	TAUJ0CMOR1	0000_H	16	$FFE5\ 0084_H$	1	16	√	√	√	√	√	√	√	√	√
TAUJ0	TAUJ0 channel mode OS register 2	TAUJ0CMOR2	0000_H	16	$FFE5\ 0088_H$	1	16	√	√	√	√	√	√	√	√	√
TAUJ0	TAUJ0 channel mode OS register 3	TAUJ0CMOR3	0000_H	16	$FFE5\ 008C_H$	1	16	√	√	√	√	√	√	√	√	√
TAUJ0	TAUJ0 prescaler clock select register	TAUJ0TPS	$FFFF_H$	16	$FFE5\ 0090_H$	1	16	√	√	√	√	√	√	√	√	√
TAUJ0	TAUJ0 prescaler baud rate setting register	TAUJ0BRS	00_H	8	$FFE5\ 0094_H$	1	8	√	√	√	√	√	√	√	√	√
TAUJ0	TAUJ0 channel output mode register	TAUJ0TOM	00_H	8	$FFE5\ 0098_H$	1	8	√	√	√	√	√	√	√	√	√
TAUJ0	TAUJ0 channel output configuration register	TAUJ0TOC	00_H	8	$FFE5\ 009C_H$	1	8	√	√	√	√	√	√	√	√	√
TAUJ0	TAUJ0 channel reload data enable register	TAUJ0RDE	00_H	8	$FFE5\ 00A0_H$	1	8	√	√	√	√	√	√	√	√	√
TAUJ0	TAUJ0 channel reload data mode register	TAUJ0RDM	00_H	8	$FFE5\ 00A4_H$	1	8	√	√	√	√	√	√	√	√	√
TAUJ1	TAUJ1 channel data register 0	TAUJ1CDR0	$0000\ 0000_H$	32	$FFE5\ 1000_H$	1	32	√	√	√	√	√	√	√	√	√
TAUJ1	TAUJ1 channel data register 1	TAUJ1CDR1	$0000\ 0000_H$	32	$FFE5\ 1004_H$	1	32	√	√	√	√	√	√	√	√	√
TAUJ1	TAUJ1 channel data register 2	TAUJ1CDR2	$0000\ 0000_H$	32	$FFE5\ 1008_H$	1	32	√	√	√	√	√	√	√	√	√
TAUJ1	TAUJ1 channel data register 3	TAUJ1CDR3	$0000\ 0000_H$	32	$FFE5\ 100C_H$	1	32	√	√	√	√	√	√	√	√	√
TAUJ1	TAUJ1 channel counter register 0	TAUJ1CNT0	$FFFF\ FFFF_H$	32	$FFE5\ 1010_H$	1	32	√	√	√	√	√	√	√	√	√
TAUJ1	TAUJ1 channel counter register 1	TAUJ1CNT1	$FFFF\ FFFF_H$	32	$FFE5\ 1014_H$	1	32	√	√	√	√	√	√	√	√	√
TAUJ1	TAUJ1 channel counter register 2	TAUJ1CNT2	$FFFF\ FFFF_H$	32	$FFE5\ 1018_H$	1	32	√	√	√	√	√	√	√	√	√
TAUJ1	TAUJ1 channel counter register 3	TAUJ1CNT3	$FFFF\ FFFF_H$	32	$FFE5\ 101C_H$	1	32	√	√	√	√	√	√	√	√	√
TAUJ1	TAUJ1 channel mode user register 0	TAUJ1CMUR0	00_H	8	$FFE5\ 1020_H$	1	8	√	√	√	√	√	√	√	√	√
TAUJ1	TAUJ1 channel mode user register 1	TAUJ1CMUR1	00_H	8	$FFE5\ 1024_H$	1	8	√	√	√	√	√	√	√	√	√
TAUJ1	TAUJ1 channel mode user register 2	TAUJ1CMUR2	00_H	8	$FFE5\ 1028_H$	1	8	√	√	√	√	√	√	√	√	√
TAUJ1	TAUJ1 channel mode user register 3	TAUJ1CMUR3	00_H	8	$FFE5\ 102C_H$	1	8	√	√	√	√	√	√	√	√	√
TAUJ1	TAUJ1 channel status register 0	TAUJ1CSR0	00_H	8	$FFE5\ 1030_H$	1	8	√	√	√	√	√	√	√	√	√
TAUJ1	TAUJ1 channel status register 1	TAUJ1CSR1	00_H	8	$FFE5\ 1034_H$	1	8	√	√	√	√	√	√	√	√	√
TAUJ1	TAUJ1 channel status register 2	TAUJ1CSR2	00_H	8	$FFE5\ 1038_H$	1	8	√	√	√	√	√	√	√	√	√
TAUJ1	TAUJ1 channel status register 3	TAUJ1CSR3	00_H	8	$FFE5\ 103C_H$	1	8	√	√	√	√	√	√	√	√	√
TAUJ1	TAUJ1 Channel Status Clear Trigger Register 0	TAUJ1CSC0	00_H	8	$FFE5\ 1040_H$	1	8	√	√	√	√	√	√	√	√	√
TAUJ1	TAUJ1 Channel Status Clear Trigger Register 1	TAUJ1CSC1	00_H	8	$FFE5\ 1044_H$	1	8	√	√	√	√	√	√	√	√	√
TAUJ1	TAUJ1 Channel Status Clear Trigger Register 2	TAUJ1CSC2	00_H	8	$FFE5\ 1048_H$	1	8	√	√	√	√	√	√	√	√	√
TAUJ1	TAUJ1 Channel Status Clear Trigger Register 3	TAUJ1CSC3	00_H	8	$FFE5\ 104C_H$	1	8	√	√	√	√	√	√	√	√	√
TAUJ1	TAUJ1 channel enable status register	TAUJ1TE	00_H	8	$FFE5\ 1050_H$	1	8	√	√	√	√	√	√	√	√	√
TAUJ1	TAUJ1 channel start trigger register	TAUJ1TS	00_H	8	$FFE5\ 1054_H$	1	8	√	√	√	√	√	√	√	√	√
TAUJ1	TAUJ1 channel stop trigger register	TAUJ1TT	00_H	8	$FFE5\ 1058_H$	1	8	√	√	√	√	√	√	√	√	√
TAUJ1	TAUJ1 channel output register	TAUJ1TO	00_H	8	$FFE5\ 105C_H$	1	8	√	√	√	√	√	√	√	√	√
TAUJ1	TAUJ1 channel output enable register	TAUJ1TOE	00_H	8	$FFE5\ 1060_H$	1	8	√	√	√	√	√	√	√	√	√
TAUJ1	TAUJ1 channel output active level register	TAUJ1TOL	00_H	8	$FFE5\ 1064_H$	1	8	√	√	√	√	√	√	√	√	√
TAUJ1	TAUJ1 channel reload data trigger register	TAUJ1RDT	00_H	8	$FFE5\ 1068_H$	1	8	√	√	√	√	√	√	√	√	√
TAUJ1	TAUJ1 channel reload status register	TAUJ1RSF	00_H	8	$FFE5\ 106C_H$	1	8	√	√	√	√	√	√	√	√	√
TAUJ1	TAUJ1 channel mode OS register 0	TAUJ1CMOR0	0000_H	16	$FFE5\ 1080_H$	1	16	√	√	√	√	√	√	√	√	√
TAUJ1	TAUJ1 channel mode OS register 1	TAUJ1CMOR1	0000_H	16	$FFE5\ 1084_H$	1	16	√	√	√	√	√	√	√	√	√
TAUJ1	TAUJ1 channel mode OS register 2	TAUJ1CMOR2	0000_H	16	$FFE5\ 1088_H$	1	16	√	√	√	√	√	√	√	√	√
TAUJ1	TAUJ1 channel mode OS register 3	TAUJ1CMOR3	0000_H	16	$FFE5\ 108C_H$	1	16	√	√	√	√	√	√	√	√	√
TAUJ1	TAUJ1 prescaler clock select register	TAUJ1TPS	$FFFF_H$	16	$FFE5\ 1090_H$	1	16	√	√	√	√	√	√	√	√	√
TAUJ1	TAUJ1 prescaler baud rate setting register	TAUJ1BRS	00_H	8	$FFE5\ 1094_H$	1	8	√	√	√	√	√	√	√	√	√
TAUJ1	TAUJ1 channel output mode register	TAUJ1TOM	00_H	8	$FFE5\ 1098_H$	1	8	√	√	√	√	√	√	√	√	√
TAUJ1	TAUJ1 channel output configuration register	TAUJ1TOC	00_H	8	$FFE5\ 109C_H$	1	8	√	√	√	√	√	√	√	√	√
TAUJ1	TAUJ1 channel reload data enable register	TAUJ1RDE	00_H	8	$FFE5\ 10A0_H$	1	8	√	√	√	√	√	√	√	√	√
TAUJ1	TAUJ1 channel reload data mode register	TAUJ1RDM	00_H	8	$FFE5\ 10A4_H$	1	8	√	√	√	√	√	√	√	√	√
TAUJ2	TAUJ2 channel data register 0	TAUJ2CDR0	$0000\ 0000_H$	32	$FFE5\ 2000_H$	1	32	√	√	√	√	√	√	√	√	√
TAUJ2	TAUJ2 channel data register 1	TAUJ2CDR1	$0000\ 0000_H$	32	$FFE5\ 2004_H$	1	32	√	√	√	√	√	√	√	√	√

Table A.1 List of Registers (56/124)

Module	Register	Symbol	Value after Reset	Number of Bits	Address	Peripheral IP group	Access Size	Reset Source*1							Access Authority*1	
								POCRES	CVMRES	EXTRES	DBRES	ECMRES	BISTRES	SWRES	SV	UM
TAUJ2	TAUJ2 channel data register 2	TAUJ2CDR2	0000 0000_H	32	FFE5 2008_H	1	32	√	√	√	√	√	√	√	√	√
TAUJ2	TAUJ2 channel data register 3	TAUJ2CDR3	0000 0000_H	32	FFE5 $200C_H$	1	32	√	√	√	√	√	√	√	√	√
TAUJ2	TAUJ2 channel counter register 0	TAUJ2CNT0	FFFF $FFFF_H$	32	FFE5 2010_H	1	32	√	√	√	√	√	√	√	√	√
TAUJ2	TAUJ2 channel counter register 1	TAUJ2CNT1	FFFF $FFFF_H$	32	FFE5 2014_H	1	32	√	√	√	√	√	√	√	√	√
TAUJ2	TAUJ2 channel counter register 2	TAUJ2CNT2	FFFF $FFFF_H$	32	FFE5 2018_H	1	32	√	√	√	√	√	√	√	√	√
TAUJ2	TAUJ2 channel counter register 3	TAUJ2CNT3	FFFF $FFFF_H$	32	FFE5 $201C_H$	1	32	√	√	√	√	√	√	√	√	√
TAUJ2	TAUJ2 channel mode user register 0	TAUJ2CMUR0	00_H	8	FFE5 2020_H	1	8	√	√	√	√	√	√	√	√	√
TAUJ2	TAUJ2 channel mode user register 1	TAUJ2CMUR1	00_H	8	FFE5 2024_H	1	8	√	√	√	√	√	√	√	√	√
TAUJ2	TAUJ2 channel mode user register 2	TAUJ2CMUR2	00_H	8	FFE5 2028_H	1	8	√	√	√	√	√	√	√	√	√
TAUJ2	TAUJ2 channel mode user register 3	TAUJ2CMUR3	00_H	8	FFE5 $202C_H$	1	8	√	√	√	√	√	√	√	√	√
TAUJ2	TAUJ2 channel status register 0	TAUJ2CSR0	00_H	8	FFE5 2030_H	1	8	√	√	√	√	√	√	√	√	√
TAUJ2	TAUJ2 channel status register 1	TAUJ2CSR1	00_H	8	FFE5 2034_H	1	8	√	√	√	√	√	√	√	√	√
TAUJ2	TAUJ2 channel status register 2	TAUJ2CSR2	00_H	8	FFE5 2038_H	1	8	√	√	√	√	√	√	√	√	√
TAUJ2	TAUJ2 channel status register 3	TAUJ2CSR3	00_H	8	FFE5 $203C_H$	1	8	√	√	√	√	√	√	√	√	√
TAUJ2	TAUJ2 Channel Status Clear Trigger Register 0	TAUJ2CSC0	00_H	8	FFE5 2040_H	1	8	√	√	√	√	√	√	√	√	√
TAUJ2	TAUJ2 Channel Status Clear Trigger Register 1	TAUJ2CSC1	00_H	8	FFE5 2044_H	1	8	√	√	√	√	√	√	√	√	√
TAUJ2	TAUJ2 Channel Status Clear Trigger Register 2	TAUJ2CSC2	00_H	8	FFE5 2048_H	1	8	√	√	√	√	√	√	√	√	√
TAUJ2	TAUJ2 Channel Status Clear Trigger Register 3	TAUJ2CSC3	00_H	8	FFE5 $204C_H$	1	8	√	√	√	√	√	√	√	√	√
TAUJ2	TAUJ2 channel enable status register	TAUJ2TE	00_H	8	FFE5 2050_H	1	8	√	√	√	√	√	√	√	√	√
TAUJ2	TAUJ2 channel start trigger register	TAUJ2TS	00_H	8	FFE5 2054_H	1	8	√	√	√	√	√	√	√	√	√
TAUJ2	TAUJ2 channel stop trigger register	TAUJ2TT	00_H	8	FFE5 2058_H	1	8	√	√	√	√	√	√	√	√	√
TAUJ2	TAUJ2 channel output register	TAUJ2TO	00_H	8	FFE5 $205C_H$	1	8	√	√	√	√	√	√	√	√	√
TAUJ2	TAUJ2 channel output enable register	TAUJ2TOE	00_H	8	FFE5 2060_H	1	8	√	√	√	√	√	√	√	√	√
TAUJ2	TAUJ2 channel output active level register	TAUJ2TOL	00_H	8	FFE5 2064_H	1	8	√	√	√	√	√	√	√	√	√
TAUJ2	TAUJ2 channel reload data trigger register	TAUJ2RDT	00_H	8	FFE5 2068_H	1	8	√	√	√	√	√	√	√	√	√
TAUJ2	TAUJ2 channel reload status register	TAUJ2RSF	00_H	8	FFE5 $206C_H$	1	8	√	√	√	√	√	√	√	√	√
TAUJ2	TAUJ2 channel mode OS register 0	TAUJ2CMOR0	0000_H	16	FFE5 2080_H	1	16	√	√	√	√	√	√	√	√	√
TAUJ2	TAUJ2 channel mode OS register 1	TAUJ2CMOR1	0000_H	16	FFE5 2084_H	1	16	√	√	√	√	√	√	√	√	√
TAUJ2	TAUJ2 channel mode OS register 2	TAUJ2CMOR2	0000_H	16	FFE5 2088_H	1	16	√	√	√	√	√	√	√	√	√
TAUJ2	TAUJ2 channel mode OS register 3	TAUJ2CMOR3	0000_H	16	FFE5 $208C_H$	1	16	√	√	√	√	√	√	√	√	√
TAUJ2	TAUJ2 prescaler clock select register	TAUJ2TPS	$FFFF_H$	16	FFE5 2090_H	1	16	√	√	√	√	√	√	√	√	√
TAUJ2	TAUJ2 prescaler baud rate setting register	TAUJ2BRS	00_H	8	FFE5 2094_H	1	8	√	√	√	√	√	√	√	√	√
TAUJ2	TAUJ2 channel output mode register	TAUJ2TOM	00_H	8	FFE5 2098_H	1	8	√	√	√	√	√	√	√	√	√
TAUJ2	TAUJ2 channel output configuration register	TAUJ2TOC	00_H	8	FFE5 $209C_H$	1	8	√	√	√	√	√	√	√	√	√
TAUJ2	TAUJ2 channel reload data enable register	TAUJ2RDE	00_H	8	FFE5 $20A0_H$	1	8	√	√	√	√	√	√	√	√	√
TAUJ2	TAUJ2 channel reload data mode register	TAUJ2RDM	00_H	8	FFE5 $20A4_H$	1	8	√	√	√	√	√	√	√	√	√
TSG30	TSG30 I/O control register 2	TSG30IOC2	0000_H	16	FFE7 0000_H	1	16	√	√	√	√	√	√	√	√	√
TSG30	TSG30 control register 3	TSG30CTL3	00_H	8	FFE7 0004_H	1	8	√	√	√	√	√	√	√	√	√
TSG30	TSG30 control register 5	TSG30CTL5	0000_H	16	FFE7 0008_H	1	16	√	√	√	√	√	√	√	√	√
TSG30	TSG30 control register 6	TSG30CTL6	0000_H	16	FFE7 $000C_H$	1	16	√	√	√	√	√	√	√	√	√
TSG30	TSG30 status register 0	TSG30STR0	00_H	8	FFE7 0010_H	1	8	√	√	√	√	√	√	√	√	√
TSG30	TSG30 status register 1	TSG30STR1	00_H	8	FFE7 0014_H	1	8	√	√	√	√	√	√	√	√	√
TSG30	TSG30 status register 2	TSG30STR2	0000_H	16	FFE7 0018_H	1	16	√	√	√	√	√	√	√	√	√
TSG30	TSG30 status clear trigger register	TSG30STC	0000_H	16	FFE7 $001C_H$	1	16	√	√	√	√	√	√	√	√	√
TSG30	TSG30 option register 0	TSG30OPT0	00_H	8	FFE7 0020_H	1	8	√	√	√	√	√	√	√	√	√
TSG30	TSG30 option register 1	TSG30OPT1	00_H	8	FFE7 0024_H	1	8	√	√	√	√	√	√	√	√	√
TSG30	TSG30 counter read buffer register	TSG30CNT	0000_H	16	FFE7 0028_H	1	16	√	√	√	√	√	√	√	√	√
TSG30	TSG30 sub-counter read buffer register	TSG30SBC	0000_H	16	FFE7 $002C_H$	1	16	√	√	√	√	√	√	√	√	√
TSG30	TSG30 trigger register 0	TSG30TRG0	00_H	8	FFE7 0030_H	1	8	√	√	√	√	√	√	√	√	√
TSG30	TSG30 trigger register 1	TSG30TRG1	00_H	8	FFE7 0034_H	1	8	√	√	√	√	√	√	√	√	√
TSG30	TSG30 trigger register 2	TSG30TRG2	00_H	8	FFE7 0038_H	1	8	√	√	√	√	√	√	√	√	√
TSG30	TSG30 compare register 1, 2	TSG30CMP1W	0000 0000_H	32	FFE7 0040_H	1	32	√	√	√	√	√	√	√	√	√
TSG30	TSG30 compare register 5, 6	TSG30CMP5W	0000 0000_H	32	FFE7 0044_H	1	32	√	√	√	√	√	√	√	√	√

Table A.1 List of Registers (57/124)

Module	Register	Symbol	Value after Reset	Number of Bits	Address	Peripheral IP group	Access Size	Reset Source*1							Access Authority*1	
								POCRES	CVMRES	EXTRES	DBRES	ECMRES	BISTRES	SWRES	SV	UM
TSG30	TSG30 compare register 9, 10	TSG30CMP9W	$0000\ 0000_H$	32	$FFE7\ 0048_H$	1	32	√	√	√	√	√	√	√	√	√
TSG30	TSG30 compare register 3, 4	TSG30CMP3W	$0000\ 0000_H$	32	$FFE7\ 004C_H$	1	32	√	√	√	√	√	√	√	√	√
TSG30	TSG30 compare register 7, 8	TSG30CMP7W	$0000\ 0000_H$	32	$FFE7\ 0050_H$	1	32	√	√	√	√	√	√	√	√	√
TSG30	TSG30 compare register 11, 12	TSG30CMP11W	$0000\ 0000_H$	32	$FFE7\ 0054_H$	1	32	√	√	√	√	√	√	√	√	√
TSG30	TSG30 compare register 0	TSG30CMP0	$0000\ 0000_H$	32	$FFE7\ 0058_H$	1	32	√	√	√	√	√	√	√	√	√
TSG30	TSG30 diagnostic output compare register 0, 1	TSG30DCMP0W	$0000\ 0000_H$	32	$FFE7\ 005C_H$	1	32	√	√	√	√	√	√	√	√	√
TSG30	TSG30 diagnostic output compare register 2	TSG30DCMP2	$0000\ 0000_H$	32	$FFE7\ 0060_H$	1	32	√	√	√	√	√	√	√	√	√
TSG30	TSG30 pattern register 0	TSG30PAT0W	$0000\ 0000_H$	32	$FFE7\ 0064_H$	1	32	√	√	√	√	√	√	√	√	√
TSG30	TSG30 pattern register 1	TSG30PAT1W	$0000\ 0000_H$	32	$FFE7\ 0068_H$	1	32	√	√	√	√	√	√	√	√	√
TSG30	TSG30 dead time control register 0	TSG30DTC0W	$0000\ 0000_H$	32	$FFE7\ 006C_H$	1	32	√	√	√	√	√	√	√	√	√
TSG30	TSG30 dead time control register 1	TSG30DTC1W	$0000\ 0000_H$	32	$FFE7\ 0070_H$	1	32	√	√	√	√	√	√	√	√	√
TSG30	TSG30 I/O control register 3	TSG30IOC3	$0000\ 0000_H$	32	$FFE7\ 0074_H$	1	32	√	√	√	√	√	√	√	√	√
TSG30	TSG30 control register 2	TSG30CTL2	$0000\ 0000_H$	32	$FFE7\ 0078_H$	1	32	√	√	√	√	√	√	√	√	√
TSG30	TSG30 control register 4	TSG30CTL4	$0000\ 0000_H$	32	$FFE7\ 007C_H$	1	32	√	√	√	√	√	√	√	√	√
TSG30	TSG30 compare register 1	TSG30CMP1	0000_H	16	$FFE7\ 0080_H$	1	16	√	√	√	√	√	√	√	√	√
TSG30	TSG30 compare register 2	TSG30CMP2	0000_H	16	$FFE7\ 0084_H$	1	16	√	√	√	√	√	√	√	√	√
TSG30	TSG30 compare register 5	TSG30CMP5	0000_H	16	$FFE7\ 0088_H$	1	16	√	√	√	√	√	√	√	√	√
TSG30	TSG30 compare register 6	TSG30CMP6	0000_H	16	$FFE7\ 008C_H$	1	16	√	√	√	√	√	√	√	√	√
TSG30	TSG30 compare register 9	TSG30CMP9	0000_H	16	$FFE7\ 0090_H$	1	16	√	√	√	√	√	√	√	√	√
TSG30	TSG30 compare register 10	TSG30CMP10	0000_H	16	$FFE7\ 0094_H$	1	16	√	√	√	√	√	√	√	√	√
TSG30	TSG30 compare register 3	TSG30CMP3	0000_H	16	$FFE7\ 0098_H$	1	16	√	√	√	√	√	√	√	√	√
TSG30	TSG30 compare register 4	TSG30CMP4	0000_H	16	$FFE7\ 009C_H$	1	16	√	√	√	√	√	√	√	√	√
TSG30	TSG30 compare register 7	TSG30CMP7	0000_H	16	$FFE7\ 00A0_H$	1	16	√	√	√	√	√	√	√	√	√
TSG30	TSG30 compare register 8	TSG30CMP8	0000_H	16	$FFE7\ 00A4_H$	1	16	√	√	√	√	√	√	√	√	√
TSG30	TSG30 compare register 11	TSG30CMP11	0000_H	16	$FFE7\ 00A8_H$	1	16	√	√	√	√	√	√	√	√	√
TSG30	TSG30 compare register 12	TSG30CMP12	0000_H	16	$FFE7\ 00AC_H$	1	16	√	√	√	√	√	√	√	√	√
TSG30	TSG30 HT-PWM U phase compare register	TSG30CMPU	0000_H	16	$FFE7\ 00B0_H$	1	16	√	√	√	√	√	√	√	√	√
TSG30	TSG30 HT-PWM V phase compare register	TSG30CMPV	0000_H	16	$FFE7\ 00B4_H$	1	16	√	√	√	√	√	√	√	√	√
TSG30	TSG30 HT-PWM W phase compare register	TSG30CMPW	0000_H	16	$FFE7\ 00B8_H$	1	16	√	√	√	√	√	√	√	√	√
TSG30	TSG30 SP-PWM U phase active width register	TSG30UPW	0000_H	16	$FFE7\ 00BC_H$	1	16	√	√	√	√	√	√	√	√	√
TSG30	TSG30 SP-PWM V phase active width register	TSG30VPW	0000_H	16	$FFE7\ 00C0_H$	1	16	√	√	√	√	√	√	√	√	√
TSG30	TSG30 SP-PWM W phase active width register	TSG30WPW	0000_H	16	$FFE7\ 00C4_H$	1	16	√	√	√	√	√	√	√	√	√
TSG30	TSG30 HSP-PWM Mode W phase shift register	TSG30HSPSHWE	$0000\ 0000_H$	32	$FFE7\ 0120_H$	1	32	√	√	√	√	√	√	√	√	√
TSG30	TSG30 HSP-PWM Mode V phase shift register	TSG30HSPSHVE	$0000\ 0000_H$	32	$FFE7\ 0124_H$	1	32	√	√	√	√	√	√	√	√	√
TSG30	TSG30 HSP-PWM Mode U phase shift register	TSG30HSPSHUE	$0000\ 0000_H$	32	$FFE7\ 0128_H$	1	32	√	√	√	√	√	√	√	√	√
TSG30	TSG30 HSP-PWM Mode W Phase Compare Register	TSG30HSPCMWE	$0000\ 0000_H$	32	$FFE7\ 012C_H$	1	32	√	√	√	√	√	√	√	√	√
TSG30	TSG30 HSP-PWM Mode V Phase Compare Register	TSG30HSPCMVE	$0000\ 0000_H$	32	$FFE7\ 0130_H$	1	32	√	√	√	√	√	√	√	√	√
TSG30	TSG30 HSP-PWM Mode U Phase Compare Register	TSG30HSPCMUE	$0000\ 0000_H$	32	$FFE7\ 0134_H$	1	32	√	√	√	√	√	√	√	√	√
TSG30	TSG30 bit extended diagnostic output compare register 2	TSG30DCMP2E	$0000\ 0000_H$	32	$FFE7\ 0140_H$	1	32	√	√	√	√	√	√	√	√	√
TSG30	TSG30 bit extended diagnostic output compare register 1	TSG30DCMP1E	$0000\ 0000_H$	32	$FFE7\ 0144_H$	1	32	√	√	√	√	√	√	√	√	√
TSG30	TSG30 bit extended diagnostic output compare register 0	TSG30DCMP0E	$0000\ 0000_H$	32	$FFE7\ 0148_H$	1	32	√	√	√	√	√	√	√	√	√
TSG30	TSG30 bit extended compare register 0	TSG30CMP0E	$0000\ 0000_H$	32	$FFE7\ 014C_H$	1	32	√	√	√	√	√	√	√	√	√
TSG30	TSG30 bit extended compare register 12	TSG30CMP12E	$0000\ 0000_H$	32	$FFE7\ 0150_H$	1	32	√	√	√	√	√	√	√	√	√
TSG30	TSG30 bit extended compare register 11	TSG30CMP11E	$0000\ 0000_H$	32	$FFE7\ 0154_H$	1	32	√	√	√	√	√	√	√	√	√
TSG30	TSG30 bit extended compare register 8	TSG30CMP8E	$0000\ 0000_H$	32	$FFE7\ 0158_H$	1	32	√	√	√	√	√	√	√	√	√
TSG30	TSG30 bit extended compare register 7	TSG30CMP7E	$0000\ 0000_H$	32	$FFE7\ 015C_H$	1	32	√	√	√	√	√	√	√	√	√
TSG30	TSG30 bit extended compare register 4	TSG30CMP4E	$0000\ 0000_H$	32	$FFE7\ 0160_H$	1	32	√	√	√	√	√	√	√	√	√
TSG30	TSG30 bit extended compare register 3	TSG30CMP3E	$0000\ 0000_H$	32	$FFE7\ 0164_H$	1	32	√	√	√	√	√	√	√	√	√
TSG30	TSG30 bit extended compare register 10	TSG30CMP10E	$0000\ 0000_H$	32	$FFE7\ 0168_H$	1	32	√	√	√	√	√	√	√	√	√
TSG30	TSG30 bit extended compare register 9	TSG30CMP9E	$0000\ 0000_H$	32	$FFE7\ 016C_H$	1	32	√	√	√	√	√	√	√	√	√
TSG30	TSG30 bit extended compare register 6	TSG30CMP6E	$0000\ 0000_H$	32	$FFE7\ 0170_H$	1	32	√	√	√	√	√	√	√	√	√
TSG30	TSG30 bit extended compare register 5	TSG30CMP5E	$0000\ 0000_H$	32	$FFE7\ 0174_H$	1	32	√	√	√	√	√	√	√	√	√
TSG30	TSG30 bit extended compare register 2	TSG30CMP2E	$0000\ 0000_H$	32	$FFE7\ 0178_H$	1	32	√	√	√	√	√	√	√	√	√

Table A.1 List of Registers (58/124)

Module	Register	Symbol	Value after Reset	Number of Bits	Address	Peripheral IP group	Access Size	Reset Source*1							Access Authority*1	
								POCRES	CVMRES	EXTRES	DBRES	ECMRES	BISTRES	SWRES	SV	UM
TSG30	TSG30 bit extended compare register 1	TSG30CMP1E	$0000\ 0000_H$	32	$FFE7\ 017C_H$	1	32	√	√	√	√	√	√	√	√	√
TSG30	TSG30 bit extended HT-PWM W phase compare register	TSG30CMPWE	$0000\ 0000_H$	32	$FFE7\ 0180_H$	1	32	√	√	√	√	√	√	√	√	√
TSG30	TSG30 bit extended HT-PWM V phase compare register	TSG30CMPVE	$0000\ 0000_H$	32	$FFE7\ 0184_H$	1	32	√	√	√	√	√	√	√	√	√
TSG30	TSG30 bit extended HT-PWM U phase compare register	TSG30CMPUE	$0000\ 0000_H$	32	$FFE7\ 0188_H$	1	32	√	√	√	√	√	√	√	√	√
TSG30	TSG30 bit extended SP-PWM W phase active width register	TSG30WPWE	$0000\ 0000_H$	32	$FFE7\ 0190_H$	1	32	√	√	√	√	√	√	√	√	√
TSG30	TSG30 bit extended SP-PWM V phase active width register	TSG30VPWE	$0000\ 0000_H$	32	$FFE7\ 0194_H$	1	32	√	√	√	√	√	√	√	√	√
TSG30	TSG30 bit extended SP-PWM U phase active width register	TSG30UPWE	$0000\ 0000_H$	32	$FFE7\ 0198_H$	1	32	√	√	√	√	√	√	√	√	√
TSG30	TSG30 bit extended counter read buffer register	TSG30CNTE	$0000\ 0000_H$	32	$FFE7\ 01A0_H$	1	32	√	√	√	√	√	√	√	√	√
TSG30	TSG30 bit extended sub-counter read buffer register	TSG30SBCE	$0000\ 0000_H$	32	$FFE7\ 01A4_H$	1	32	√	√	√	√	√	√	√	√	√
TSG30	TSG30 I/O control register 0	TSG30IOC0	$7E_H$	8	$FFE7\ 0200_H$	1	8	√	√	√	√	√	√	√	√	√
TSG30	TSG30 I/O control register 1	TSG30IOC1	00_H	8	$FFE7\ 0204_H$	1	8	√	√	√	√	√	√	√	√	√
TSG30	TSG30 control register 0	TSG30CTL0	00_H	8	$FFE7\ 0208_H$	1	8	√	√	√	√	√	√	√	√	√
TSG30	TSG30 control register 1	TSG30CTL1	0000_H	16	$FFE7\ 020C_H$	1	16	√	√	√	√	√	√	√	√	√
TSG30	TSG30 dead time protection register	TSG30DTPR	0000_H	16	$FFE7\ 0210_H$	1	16	√	√	√	√	√	√	√	√	√
TSG30	TSG30 control register 7	TSG30CTL7	00_H	8	$FFE7\ 0218_H$	1	8	√	√	√	√	√	√	√	√	√
TSG30	TSG30 control register 8	TSG30CTL8	00_H	8	$FFE7\ 021C_H$	1	8	√	√	√	√	√	√	√	√	√
TSG31	TSG31 I/O control register 2	TSG31IOC2	0000_H	16	$FFE7\ 1000_H$	1	16	√	√	√	√	√	√	√	√	√
TSG31	TSG31 control register 3	TSG31CTL3	00_H	8	$FFE7\ 1004_H$	1	8	√	√	√	√	√	√	√	√	√
TSG31	TSG31 control register 5	TSG31CTL5	0000_H	16	$FFE7\ 1008_H$	1	16	√	√	√	√	√	√	√	√	√
TSG31	TSG31 control register 6	TSG31CTL6	0000_H	16	$FFE7\ 100C_H$	1	16	√	√	√	√	√	√	√	√	√
TSG31	TSG31 status register 0	TSG31STR0	00_H	8	$FFE7\ 1010_H$	1	8	√	√	√	√	√	√	√	√	√
TSG31	TSG31 status register 1	TSG31STR1	00_H	8	$FFE7\ 1014_H$	1	8	√	√	√	√	√	√	√	√	√
TSG31	TSG31 status register 2	TSG31STR2	0000_H	16	$FFE7\ 1018_H$	1	16	√	√	√	√	√	√	√	√	√
TSG31	TSG31 status clear trigger register	TSG31STC	0000_H	16	$FFE7\ 101C_H$	1	16	√	√	√	√	√	√	√	√	√
TSG31	TSG31 option register 0	TSG31OPT0	00_H	8	$FFE7\ 1020_H$	1	8	√	√	√	√	√	√	√	√	√
TSG31	TSG31 option register 1	TSG31OPT1	00_H	8	$FFE7\ 1024_H$	1	8	√	√	√	√	√	√	√	√	√
TSG31	TSG31 counter read buffer register	TSG31CNT	0000_H	16	$FFE7\ 1028_H$	1	16	√	√	√	√	√	√	√	√	√
TSG31	TSG31 sub-counter read buffer register	TSG31SBC	0000_H	16	$FFE7\ 102C_H$	1	16	√	√	√	√	√	√	√	√	√
TSG31	TSG31 trigger register 0	TSG31TRG0	00_H	8	$FFE7\ 1030_H$	1	8	√	√	√	√	√	√	√	√	√
TSG31	TSG31 trigger register 1	TSG31TRG1	00_H	8	$FFE7\ 1034_H$	1	8	√	√	√	√	√	√	√	√	√
TSG31	TSG31 trigger register 2	TSG31TRG2	00_H	8	$FFE7\ 1038_H$	1	8	√	√	√	√	√	√	√	√	√
TSG31	TSG31 compare register 1, 2	TSG31CMP1W	$0000\ 0000_H$	32	$FFE7\ 1040_H$	1	32	√	√	√	√	√	√	√	√	√
TSG31	TSG31 compare register 5, 6	TSG31CMP5W	$0000\ 0000_H$	32	$FFE7\ 1044_H$	1	32	√	√	√	√	√	√	√	√	√
TSG31	TSG31 compare register 9, 10	TSG31CMP9W	$0000\ 0000_H$	32	$FFE7\ 1048_H$	1	32	√	√	√	√	√	√	√	√	√
TSG31	TSG31 compare register 3, 4	TSG31CMP3W	$0000\ 0000_H$	32	$FFE7\ 104C_H$	1	32	√	√	√	√	√	√	√	√	√
TSG31	TSG31 compare register 7, 8	TSG31CMP7W	$0000\ 0000_H$	32	$FFE7\ 1050_H$	1	32	√	√	√	√	√	√	√	√	√
TSG31	TSG31 compare register 11, 12	TSG31CMP11W	$0000\ 0000_H$	32	$FFE7\ 1054_H$	1	32	√	√	√	√	√	√	√	√	√
TSG31	TSG31 compare register 0	TSG31CMP0	$0000\ 0000_H$	32	$FFE7\ 1058_H$	1	32	√	√	√	√	√	√	√	√	√
TSG31	TSG31 diagnostic output compare register 0, 1	TSG31DCMP0W	$0000\ 0000_H$	32	$FFE7\ 105C_H$	1	32	√	√	√	√	√	√	√	√	√
TSG31	TSG31 diagnostic output compare register 2	TSG31DCMP2	$0000\ 0000_H$	32	$FFE7\ 1060_H$	1	32	√	√	√	√	√	√	√	√	√
TSG31	TSG31 pattern register 0	TSG31PAT0W	$0000\ 0000_H$	32	$FFE7\ 1064_H$	1	32	√	√	√	√	√	√	√	√	√
TSG31	TSG31 pattern register 1	TSG31PAT1W	$0000\ 0000_H$	32	$FFE7\ 1068_H$	1	32	√	√	√	√	√	√	√	√	√
TSG31	TSG31 dead time control register 0	TSG31DTC0W	$0000\ 0000_H$	32	$FFE7\ 106C_H$	1	32	√	√	√	√	√	√	√	√	√
TSG31	TSG31 dead time control register 1	TSG31DTC1W	$0000\ 0000_H$	32	$FFE7\ 1070_H$	1	32	√	√	√	√	√	√	√	√	√
TSG31	TSG31 I/O control register 3	TSG31IOC3	$0000\ 0000_H$	32	$FFE7\ 1074_H$	1	32	√	√	√	√	√	√	√	√	√
TSG31	TSG31 control register 2	TSG31CTL2	$0000\ 0000_H$	32	$FFE7\ 1078_H$	1	32	√	√	√	√	√	√	√	√	√
TSG31	TSG31 control register 4	TSG31CTL4	$0000\ 0000_H$	32	$FFE7\ 107C_H$	1	32	√	√	√	√	√	√	√	√	√
TSG31	TSG31 compare register 1	TSG31CMP1	0000_H	16	$FFE7\ 1080_H$	1	16	√	√	√	√	√	√	√	√	√
TSG31	TSG31 compare register 2	TSG31CMP2	0000_H	16	$FFE7\ 1084_H$	1	16	√	√	√	√	√	√	√	√	√
TSG31	TSG31 compare register 5	TSG31CMP5	0000_H	16	$FFE7\ 1088_H$	1	16	√	√	√	√	√	√	√	√	√
TSG31	TSG31 compare register 6	TSG31CMP6	0000_H	16	$FFE7\ 108C_H$	1	16	√	√	√	√	√	√	√	√	√
TSG31	TSG31 compare register 9	TSG31CMP9	0000_H	16	$FFE7\ 1090_H$	1	16	√	√	√	√	√	√	√	√	√
TSG31	TSG31 compare register 10	TSG31CMP10	0000_H	16	$FFE7\ 1094_H$	1	16	√	√	√	√	√	√	√	√	√

Table A.1 List of Registers (59/124)

Module	Register	Symbol	Value after Reset	Number of Bits	Address	Peripheral IP group	Access Size	Reset Source*1							Access Authority*1	
								POCRES	CVMRES	EXTRES	DBRES	ECMRES	BISTRES	SWRES	SV	UM
TSG31	TSG31 compare register 3	TSG31CMP3	0000_H	16	$FFE7\ 1098_H$	1	16	√	√	√	√	√	√	√	√	√
TSG31	TSG31 compare register 4	TSG31CMP4	0000_H	16	$FFE7\ 109C_H$	1	16	√	√	√	√	√	√	√	√	√
TSG31	TSG31 compare register 7	TSG31CMP7	0000_H	16	$FFE7\ 10A0_H$	1	16	√	√	√	√	√	√	√	√	√
TSG31	TSG31 compare register 8	TSG31CMP8	0000_H	16	$FFE7\ 10A4_H$	1	16	√	√	√	√	√	√	√	√	√
TSG31	TSG31 compare register 11	TSG31CMP11	0000_H	16	$FFE7\ 10A8_H$	1	16	√	√	√	√	√	√	√	√	√
TSG31	TSG31 compare register 12	TSG31CMP12	0000_H	16	$FFE7\ 10AC_H$	1	16	√	√	√	√	√	√	√	√	√
TSG31	TSG31 HT-PWM U phase compare register	TSG31CMPU	0000_H	16	$FFE7\ 10B0_H$	1	16	√	√	√	√	√	√	√	√	√
TSG31	TSG31 HT-PWM V phase compare register	TSG31CMPV	0000_H	16	$FFE7\ 10B4_H$	1	16	√	√	√	√	√	√	√	√	√
TSG31	TSG31 HT-PWM W phase compare register	TSG31CMPW	0000_H	16	$FFE7\ 10B8_H$	1	16	√	√	√	√	√	√	√	√	√
TSG31	TSG31 SP-PWM U phase active width register	TSG31UPW	0000_H	16	$FFE7\ 10BC_H$	1	16	√	√	√	√	√	√	√	√	√
TSG31	TSG31 SP-PWM V phase active width register	TSG31VPW	0000_H	16	$FFE7\ 10C0_H$	1	16	√	√	√	√	√	√	√	√	√
TSG31	TSG31 SP-PWM W phase active width register	TSG31WPW	0000_H	16	$FFE7\ 10C4_H$	1	16	√	√	√	√	√	√	√	√	√
TSG31	TSG31 HSP-PWM Mode W phase shift register	TSG31HSPSHWE	$0000\ 0000_H$	32	$FFE7\ 1120_H$	1	32	√	√	√	√	√	√	√	√	√
TSG31	TSG31 HSP-PWM Mode V phase shift register	TSG31HSPSHVE	$0000\ 0000_H$	32	$FFE7\ 1124_H$	1	32	√	√	√	√	√	√	√	√	√
TSG31	TSG31 HSP-PWM Mode U phase shift register	TSG31HSPSHUE	$0000\ 0000_H$	32	$FFE7\ 1128_H$	1	32	√	√	√	√	√	√	√	√	√
TSG31	TSG31 HSP-PWM Mode W Phase Compare Register	TSG31HSPCMWE	$0000\ 0000_H$	32	$FFE7\ 112C_H$	1	32	√	√	√	√	√	√	√	√	√
TSG31	TSG31 HSP-PWM Mode V Phase Compare Register	TSG31HSPCMVE	$0000\ 0000_H$	32	$FFE7\ 1130_H$	1	32	√	√	√	√	√	√	√	√	√
TSG31	TSG31 HSP-PWM Mode U Phase Compare Register	TSG31HSPCMUE	$0000\ 0000_H$	32	$FFE7\ 1134_H$	1	32	√	√	√	√	√	√	√	√	√
TSG31	TSG31 bit extended diagnostic output compare register 2	TSG31DCMP2E	$0000\ 0000_H$	32	$FFE7\ 1140_H$	1	32	√	√	√	√	√	√	√	√	√
TSG31	TSG31 bit extended diagnostic output compare register 1	TSG31DCMP1E	$0000\ 0000_H$	32	$FFE7\ 1144_H$	1	32	√	√	√	√	√	√	√	√	√
TSG31	TSG31 bit extended diagnostic output compare register 0	TSG31DCMP0E	$0000\ 0000_H$	32	$FFE7\ 1148_H$	1	32	√	√	√	√	√	√	√	√	√
TSG31	TSG31 bit extended compare register 0	TSG31CMP0E	$0000\ 0000_H$	32	$FFE7\ 114C_H$	1	32	√	√	√	√	√	√	√	√	√
TSG31	TSG31 bit extended compare register 12	TSG31CMP12E	$0000\ 0000_H$	32	$FFE7\ 1150_H$	1	32	√	√	√	√	√	√	√	√	√
TSG31	TSG31 bit extended compare register 11	TSG31CMP11E	$0000\ 0000_H$	32	$FFE7\ 1154_H$	1	32	√	√	√	√	√	√	√	√	√
TSG31	TSG31 bit extended compare register 8	TSG31CMP8E	$0000\ 0000_H$	32	$FFE7\ 1158_H$	1	32	√	√	√	√	√	√	√	√	√
TSG31	TSG31 bit extended compare register 7	TSG31CMP7E	$0000\ 0000_H$	32	$FFE7\ 115C_H$	1	32	√	√	√	√	√	√	√	√	√
TSG31	TSG31 bit extended compare register 4	TSG31CMP4E	$0000\ 0000_H$	32	$FFE7\ 1160_H$	1	32	√	√	√	√	√	√	√	√	√
TSG31	TSG31 bit extended compare register 3	TSG31CMP3E	$0000\ 0000_H$	32	$FFE7\ 1164_H$	1	32	√	√	√	√	√	√	√	√	√
TSG31	TSG31 bit extended compare register 10	TSG31CMP10E	$0000\ 0000_H$	32	$FFE7\ 1168_H$	1	32	√	√	√	√	√	√	√	√	√
TSG31	TSG31 bit extended compare register 9	TSG31CMP9E	$0000\ 0000_H$	32	$FFE7\ 116C_H$	1	32	√	√	√	√	√	√	√	√	√
TSG31	TSG31 bit extended compare register 6	TSG31CMP6E	$0000\ 0000_H$	32	$FFE7\ 1170_H$	1	32	√	√	√	√	√	√	√	√	√
TSG31	TSG31 bit extended compare register 5	TSG31CMP5E	$0000\ 0000_H$	32	$FFE7\ 1174_H$	1	32	√	√	√	√	√	√	√	√	√
TSG31	TSG31 bit extended compare register 2	TSG31CMP2E	$0000\ 0000_H$	32	$FFE7\ 1178_H$	1	32	√	√	√	√	√	√	√	√	√
TSG31	TSG31 bit extended compare register 1	TSG31CMP1E	$0000\ 0000_H$	32	$FFE7\ 117C_H$	1	32	√	√	√	√	√	√	√	√	√
TSG31	TSG31 bit extended HT-PWM W phase compare register	TSG31CMPWE	$0000\ 0000_H$	32	$FFE7\ 1180_H$	1	32	√	√	√	√	√	√	√	√	√
TSG31	TSG31 bit extended HT-PWM V phase compare register	TSG31CMPVE	$0000\ 0000_H$	32	$FFE7\ 1184_H$	1	32	√	√	√	√	√	√	√	√	√
TSG31	TSG31 bit extended HT-PWM U phase compare register	TSG31CMPUE	$0000\ 0000_H$	32	$FFE7\ 1188_H$	1	32	√	√	√	√	√	√	√	√	√
TSG31	TSG31 bit extended SP-PWM W phase active width register	TSG31WPWE	$0000\ 0000_H$	32	$FFE7\ 1190_H$	1	32	√	√	√	√	√	√	√	√	√
TSG31	TSG31 bit extended SP-PWM V phase active width register	TSG31VPWE	$0000\ 0000_H$	32	$FFE7\ 1194_H$	1	32	√	√	√	√	√	√	√	√	√
TSG31	TSG31 bit extended SP-PWM U phase active width register	TSG31UPWE	$0000\ 0000_H$	32	$FFE7\ 1198_H$	1	32	√	√	√	√	√	√	√	√	√
TSG31	TSG31 bit extended counter read buffer register	TSG31CNTE	$0000\ 0000_H$	32	$FFE7\ 11A0_H$	1	32	√	√	√	√	√	√	√	√	√
TSG31	TSG31 bit extended sub-counter read buffer register	TSG31SBCE	$0000\ 0000_H$	32	$FFE7\ 11A4_H$	1	32	√	√	√	√	√	√	√	√	√
TSG31	TSG31 I/O control register 0	TSG31IOC0	$7E_H$	8	$FFE7\ 1200_H$	1	8	√	√	√	√	√	√	√	√	√
TSG31	TSG31 I/O control register 1	TSG31IOC1	00_H	8	$FFE7\ 1204_H$	1	8	√	√	√	√	√	√	√	√	√
TSG31	TSG31 control register 0	TSG31CTL0	00_H	8	$FFE7\ 1208_H$	1	8	√	√	√	√	√	√	√	√	√
TSG31	TSG31 control register 1	TSG31CTL1	0000_H	16	$FFE7\ 120C_H$	1	16	√	√	√	√	√	√	√	√	√
TSG31	TSG31 dead time protection register	TSG31DTPR	0000_H	16	$FFE7\ 1210_H$	1	16	√	√	√	√	√	√	√	√	√
TSG31	TSG31 control register 7	TSG31CTL7	00_H	8	$FFE7\ 1218_H$	1	8	√	√	√	√	√	√	√	√	√
TSG31	TSG31 control register 8	TSG31CTL8	00_H	8	$FFE7\ 121C_H$	1	8	√	√	√	√	√	√	√	√	√
ENCA0	ENCA capture compare register 0	ENCA0CCR0	0000_H	16	$FFE8\ 0000_H$	1	16	√	√	√	√	√	√	√	√	√
ENCA0	ENCA capture compare register 1	ENCA0CCR1	0000_H	16	$FFE8\ 0004_H$	1	16	√	√	√	√	√	√	√	√	√
ENCA0	ENCA counter register	ENCA0CNT	0000_H	16	$FFE8\ 0008_H$	1	16	√	√	√	√	√	√	√	√	√
ENCA0	ENCA status flag register	ENCA0FLG	00_H	8	$FFE8\ 000C_H$	1	8	√	√	√	√	√	√	√	√	√

Table A.1 List of Registers (60/124)

Module	Register	Symbol	Value after Reset	Number of Bits	Address	Peripheral IP group	Access Size	Reset Source*1							Access Authority*1	
								POCRES	CVMRES	EXTRES	DBRES	ECMRES	BISTRES	SWRES	SV	UM
ENCA0	ENCA status flag clear register	ENCA0FGC	00_H	8	$FFE8\ 0010_H$	1	8	√	√	√	√	√	√	√	√	√
ENCA0	ENCA timer enable status register	ENCA0TE	00_H	8	$FFE8\ 0014_H$	1	8	√	√	√	√	√	√	√	√	√
ENCA0	ENCA timer start trigger register	ENCA0TS	00_H	8	$FFE8\ 0018_H$	1	8	√	√	√	√	√	√	√	√	√
ENCA0	ENCA timer stop trigger register	ENCA0TT	00_H	8	$FFE8\ 001C_H$	1	8	√	√	√	√	√	√	√	√	√
ENCA0	ENCA I/O control register 0	ENCA0IOC0	00_H	8	$FFE8\ 0020_H$	1	8	√	√	√	√	√	√	√	√	√
ENCA0	ENCA control register	ENCA0CTL	0000_H	16	$FFE8\ 0040_H$	1	16	√	√	√	√	√	√	√	√	√
ENCA0	ENCA I/O control register 1	ENCA0IOC1	00_H	8	$FFE8\ 0044_H$	1	8	√	√	√	√	√	√	√	√	√
ENCA1	ENCA capture compare register 0	ENCA1CCR0	0000_H	16	$FFE8\ 1000_H$	1	16	√	√	√	√	√	√	√	√	√
ENCA1	ENCA capture compare register 1	ENCA1CCR1	0000_H	16	$FFE8\ 1004_H$	1	16	√	√	√	√	√	√	√	√	√
ENCA1	ENCA counter register	ENCA1CNT	0000_H	16	$FFE8\ 1008_H$	1	16	√	√	√	√	√	√	√	√	√
ENCA1	ENCA status flag register	ENCA1FLG	00_H	8	$FFE8\ 100C_H$	1	8	√	√	√	√	√	√	√	√	√
ENCA1	ENCA status flag clear register	ENCA1FGC	00_H	8	$FFE8\ 1010_H$	1	8	√	√	√	√	√	√	√	√	√
ENCA1	ENCA timer enable status register	ENCA1TE	00_H	8	$FFE8\ 1014_H$	1	8	√	√	√	√	√	√	√	√	√
ENCA1	ENCA timer start trigger register	ENCA1TS	00_H	8	$FFE8\ 1018_H$	1	8	√	√	√	√	√	√	√	√	√
ENCA1	ENCA timer stop trigger register	ENCA1TT	00_H	8	$FFE8\ 101C_H$	1	8	√	√	√	√	√	√	√	√	√
ENCA1	ENCA I/O control register 0	ENCA1IOC0	00_H	8	$FFE8\ 1020_H$	1	8	√	√	√	√	√	√	√	√	√
ENCA1	ENCA control register	ENCA1CTL	0000_H	16	$FFE8\ 1040_H$	1	16	√	√	√	√	√	√	√	√	√
ENCA1	ENCA I/O control register 1	ENCA1IOC1	00_H	8	$FFE8\ 1044_H$	1	8	√	√	√	√	√	√	√	√	√
TAPA0	TAPA0 flag register	TAPA0FLG	0000_H	16	$FFE9\ 0000_H$	1	16	√	√	√	√	√	√	√	√	√
TAPA0	TAPA0 asynchronous control write enable register	TAPA0ACWE	00_H	8	$FFE9\ 0004_H$	1	8	√	√	√	√	√	√	√	√	√
TAPA0	TAPA0 asynchronous control start trigger register	TAPA0ACTS	00_H	8	$FFE9\ 0008_H$	1	8	√	√	√	√	√	√	√	√	√
TAPA0	TAPA0 asynchronous control stop trigger register	TAPA0ACTT	00_H	8	$FFE9\ 000C_H$	1	8	√	√	√	√	√	√	√	√	√
TAPA0	TAPA0 Hi-Z start trigger register	TAPA0OPHS	00_H	8	$FFE9\ 0014_H$	1	8	√	√	√	√	√	√	√	√	√
TAPA0	TAPA0 Hi-Z stop trigger register	TAPA0OPHT	00_H	8	$FFE9\ 0018_H$	1	8	√	√	√	√	√	√	√	√	√
TAPA0	TAPA0 control register 0	TAPA0CTL0	0000_H	16	$FFE9\ 0020_H$	1	16	√	√	√	√	√	√	√	√	√
TAPA1	TAPA1 flag register	TAPA1FLG	0000_H	16	$FFE9\ 1000_H$	1	16	√	√	√	√	√	√	√	√	√
TAPA1	TAPA1 asynchronous control write enable register	TAPA1ACWE	00_H	8	$FFE9\ 1004_H$	1	8	√	√	√	√	√	√	√	√	√
TAPA1	TAPA1 asynchronous control start trigger register	TAPA1ACTS	00_H	8	$FFE9\ 1008_H$	1	8	√	√	√	√	√	√	√	√	√
TAPA1	TAPA1 asynchronous control stop trigger register	TAPA1ACTT	00_H	8	$FFE9\ 100C_H$	1	8	√	√	√	√	√	√	√	√	√
TAPA1	TAPA1 Hi-Z start trigger register	TAPA1OPHS	00_H	8	$FFE9\ 1014_H$	1	8	√	√	√	√	√	√	√	√	√
TAPA1	TAPA1 Hi-Z stop trigger register	TAPA1OPHT	00_H	8	$FFE9\ 1018_H$	1	8	√	√	√	√	√	√	√	√	√
TAPA1	TAPA1 control register 0	TAPA1CTL0	0000_H	16	$FFE9\ 1020_H$	1	16	√	√	√	√	√	√	√	√	√
TAPA2	TAPA2 flag register	TAPA2FLG	0000_H	16	$FFE9\ 2000_H$	1	16	√	√	√	√	√	√	√	√	√
TAPA2	TAPA2 asynchronous control write enable register	TAPA2ACWE	00_H	8	$FFE9\ 2004_H$	1	8	√	√	√	√	√	√	√	√	√
TAPA2	TAPA2 asynchronous control start trigger register	TAPA2ACTS	00_H	8	$FFE9\ 2008_H$	1	8	√	√	√	√	√	√	√	√	√
TAPA2	TAPA2 asynchronous control stop trigger register	TAPA2ACTT	00_H	8	$FFE9\ 200C_H$	1	8	√	√	√	√	√	√	√	√	√
TAPA2	TAPA2 Hi-Z start trigger register	TAPA2OPHS	00_H	8	$FFE9\ 2014_H$	1	8	√	√	√	√	√	√	√	√	√
TAPA2	TAPA2 Hi-Z stop trigger register	TAPA2OPHT	00_H	8	$FFE9\ 2018_H$	1	8	√	√	√	√	√	√	√	√	√
TAPA2	TAPA2 control register 0	TAPA2CTL0	0000_H	16	$FFE9\ 2020_H$	1	16	√	√	√	√	√	√	√	√	√
TAPA3	TAPA3 flag register	TAPA3FLG	0000_H	16	$FFE9\ 3000_H$	1	16	√	√	√	√	√	√	√	√	√
TAPA3	TAPA3 asynchronous control write enable register	TAPA3ACWE	00_H	8	$FFE9\ 3004_H$	1	8	√	√	√	√	√	√	√	√	√
TAPA3	TAPA3 asynchronous control start trigger register	TAPA3ACTS	00_H	8	$FFE9\ 3008_H$	1	8	√	√	√	√	√	√	√	√	√
TAPA3	TAPA3 asynchronous control stop trigger register	TAPA3ACTT	00_H	8	$FFE9\ 300C_H$	1	8	√	√	√	√	√	√	√	√	√
TAPA3	TAPA3 Hi-Z start trigger register	TAPA3OPHS	00_H	8	$FFE9\ 3014_H$	1	8	√	√	√	√	√	√	√	√	√
TAPA3	TAPA3 Hi-Z stop trigger register	TAPA3OPHT	00_H	8	$FFE9\ 3018_H$	1	8	√	√	√	√	√	√	√	√	√
TAPA3	TAPA3 control register 0	TAPA3CTL0	0000_H	16	$FFE9\ 3020_H$	1	16	√	√	√	√	√	√	√	√	√
TPBA0	TPBA0 duty setting register	TPBA0BUF00	0000_H	16	$FFEA\ 0000_H$	1	16	√	√	√	√	√	√	√	√	√
TPBA0	TPBA0 duty setting register	TPBA0BUF01	0000_H	16	$FFEA\ 0004_H$	1	16	√	√	√	√	√	√	√	√	√
TPBA0	TPBA0 duty setting register	TPBA0BUF02	0000_H	16	$FFEA\ 0008_H$	1	16	√	√	√	√	√	√	√	√	√
TPBA0	TPBA0 duty setting register	TPBA0BUF03	0000_H	16	$FFEA\ 000C_H$	1	16	√	√	√	√	√	√	√	√	√
TPBA0	TPBA0 duty setting register	TPBA0BUF04	0000_H	16	$FFEA\ 0010_H$	1	16	√	√	√	√	√	√	√	√	√
TPBA0	TPBA0 duty setting register	TPBA0BUF05	0000_H	16	$FFEA\ 0014_H$	1	16	√	√	√	√	√	√	√	√	√
TPBA0	TPBA0 duty setting register	TPBA0BUF06	0000_H	16	$FFEA\ 0018_H$	1	16	√	√	√	√	√	√	√	√	√

Table A.1 List of Registers (61/124)

Module	Register	Symbol	Value after Reset	Number of Bits	Address	Peripheral IP group	Access Size	Reset Source*1							Access Authority*1	
								POCRES	CVMRES	EXTRES	DBRES	ECMRES	BISTRES	SWRES	SV	UM
TPBA0	TPBA0 duty setting register	TPBA0BUF07	0000_H	16	$FFEA\ 001C_H$	1	16	√	√	√	√	√	√	√	√	√
TPBA0	TPBA0 duty setting register	TPBA0BUF08	0000_H	16	$FFEA\ 0020_H$	1	16	√	√	√	√	√	√	√	√	√
TPBA0	TPBA0 duty setting register	TPBA0BUF09	0000_H	16	$FFEA\ 0024_H$	1	16	√	√	√	√	√	√	√	√	√
TPBA0	TPBA0 duty setting register	TPBA0BUF10	0000_H	16	$FFEA\ 0028_H$	1	16	√	√	√	√	√	√	√	√	√
TPBA0	TPBA0 duty setting register	TPBA0BUF11	0000_H	16	$FFEA\ 002C_H$	1	16	√	√	√	√	√	√	√	√	√
TPBA0	TPBA0 duty setting register	TPBA0BUF12	0000_H	16	$FFEA\ 0030_H$	1	16	√	√	√	√	√	√	√	√	√
TPBA0	TPBA0 duty setting register	TPBA0BUF13	0000_H	16	$FFEA\ 0034_H$	1	16	√	√	√	√	√	√	√	√	√
TPBA0	TPBA0 duty setting register	TPBA0BUF14	0000_H	16	$FFEA\ 0038_H$	1	16	√	√	√	√	√	√	√	√	√
TPBA0	TPBA0 duty setting register	TPBA0BUF15	0000_H	16	$FFEA\ 003C_H$	1	16	√	√	√	√	√	√	√	√	√
TPBA0	TPBA0 duty setting register	TPBA0BUF16	0000_H	16	$FFEA\ 0040_H$	1	16	√	√	√	√	√	√	√	√	√
TPBA0	TPBA0 duty setting register	TPBA0BUF17	0000_H	16	$FFEA\ 0044_H$	1	16	√	√	√	√	√	√	√	√	√
TPBA0	TPBA0 duty setting register	TPBA0BUF18	0000_H	16	$FFEA\ 0048_H$	1	16	√	√	√	√	√	√	√	√	√
TPBA0	TPBA0 duty setting register	TPBA0BUF19	0000_H	16	$FFEA\ 004C_H$	1	16	√	√	√	√	√	√	√	√	√
TPBA0	TPBA0 duty setting register	TPBA0BUF20	0000_H	16	$FFEA\ 0050_H$	1	16	√	√	√	√	√	√	√	√	√
TPBA0	TPBA0 duty setting register	TPBA0BUF21	0000_H	16	$FFEA\ 0054_H$	1	16	√	√	√	√	√	√	√	√	√
TPBA0	TPBA0 duty setting register	TPBA0BUF22	0000_H	16	$FFEA\ 0058_H$	1	16	√	√	√	√	√	√	√	√	√
TPBA0	TPBA0 duty setting register	TPBA0BUF23	0000_H	16	$FFEA\ 005C_H$	1	16	√	√	√	√	√	√	√	√	√
TPBA0	TPBA0 duty setting register	TPBA0BUF24	0000_H	16	$FFEA\ 0060_H$	1	16	√	√	√	√	√	√	√	√	√
TPBA0	TPBA0 duty setting register	TPBA0BUF25	0000_H	16	$FFEA\ 0064_H$	1	16	√	√	√	√	√	√	√	√	√
TPBA0	TPBA0 duty setting register	TPBA0BUF26	0000_H	16	$FFEA\ 0068_H$	1	16	√	√	√	√	√	√	√	√	√
TPBA0	TPBA0 duty setting register	TPBA0BUF27	0000_H	16	$FFEA\ 006C_H$	1	16	√	√	√	√	√	√	√	√	√
TPBA0	TPBA0 duty setting register	TPBA0BUF28	0000_H	16	$FFEA\ 0070_H$	1	16	√	√	√	√	√	√	√	√	√
TPBA0	TPBA0 duty setting register	TPBA0BUF29	0000_H	16	$FFEA\ 0074_H$	1	16	√	√	√	√	√	√	√	√	√
TPBA0	TPBA0 duty setting register	TPBA0BUF30	0000_H	16	$FFEA\ 0078_H$	1	16	√	√	√	√	√	√	√	√	√
TPBA0	TPBA0 duty setting register	TPBA0BUF31	0000_H	16	$FFEA\ 007C_H$	1	16	√	√	√	√	√	√	√	√	√
TPBA0	TPBA0 duty setting register	TPBA0BUF32	0000_H	16	$FFEA\ 0080_H$	1	16	√	√	√	√	√	√	√	√	√
TPBA0	TPBA0 duty setting register	TPBA0BUF33	0000_H	16	$FFEA\ 0084_H$	1	16	√	√	√	√	√	√	√	√	√
TPBA0	TPBA0 duty setting register	TPBA0BUF34	0000_H	16	$FFEA\ 0088_H$	1	16	√	√	√	√	√	√	√	√	√
TPBA0	TPBA0 duty setting register	TPBA0BUF35	0000_H	16	$FFEA\ 008C_H$	1	16	√	√	√	√	√	√	√	√	√
TPBA0	TPBA0 duty setting register	TPBA0BUF36	0000_H	16	$FFEA\ 0090_H$	1	16	√	√	√	√	√	√	√	√	√
TPBA0	TPBA0 duty setting register	TPBA0BUF37	0000_H	16	$FFEA\ 0094_H$	1	16	√	√	√	√	√	√	√	√	√
TPBA0	TPBA0 duty setting register	TPBA0BUF38	0000_H	16	$FFEA\ 0098_H$	1	16	√	√	√	√	√	√	√	√	√
TPBA0	TPBA0 duty setting register	TPBA0BUF39	0000_H	16	$FFEA\ 009C_H$	1	16	√	√	√	√	√	√	√	√	√
TPBA0	TPBA0 duty setting register	TPBA0BUF40	0000_H	16	$FFEA\ 00A0_H$	1	16	√	√	√	√	√	√	√	√	√
TPBA0	TPBA0 duty setting register	TPBA0BUF41	0000_H	16	$FFEA\ 00A4_H$	1	16	√	√	√	√	√	√	√	√	√
TPBA0	TPBA0 duty setting register	TPBA0BUF42	0000_H	16	$FFEA\ 00A8_H$	1	16	√	√	√	√	√	√	√	√	√
TPBA0	TPBA0 duty setting register	TPBA0BUF43	0000_H	16	$FFEA\ 00AC_H$	1	16	√	√	√	√	√	√	√	√	√
TPBA0	TPBA0 duty setting register	TPBA0BUF44	0000_H	16	$FFEA\ 00B0_H$	1	16	√	√	√	√	√	√	√	√	√
TPBA0	TPBA0 duty setting register	TPBA0BUF45	0000_H	16	$FFEA\ 00B4_H$	1	16	√	√	√	√	√	√	√	√	√
TPBA0	TPBA0 duty setting register	TPBA0BUF46	0000_H	16	$FFEA\ 00B8_H$	1	16	√	√	√	√	√	√	√	√	√
TPBA0	TPBA0 duty setting register	TPBA0BUF47	0000_H	16	$FFEA\ 00BC_H$	1	16	√	√	√	√	√	√	√	√	√
TPBA0	TPBA0 duty setting register	TPBA0BUF48	0000_H	16	$FFEA\ 00C0_H$	1	16	√	√	√	√	√	√	√	√	√
TPBA0	TPBA0 duty setting register	TPBA0BUF49	0000_H	16	$FFEA\ 00C4_H$	1	16	√	√	√	√	√	√	√	√	√
TPBA0	TPBA0 duty setting register	TPBA0BUF50	0000_H	16	$FFEA\ 00C8_H$	1	16	√	√	√	√	√	√	√	√	√
TPBA0	TPBA0 duty setting register	TPBA0BUF51	0000_H	16	$FFEA\ 00CC_H$	1	16	√	√	√	√	√	√	√	√	√
TPBA0	TPBA0 duty setting register	TPBA0BUF52	0000_H	16	$FFEA\ 00D0_H$	1	16	√	√	√	√	√	√	√	√	√
TPBA0	TPBA0 duty setting register	TPBA0BUF53	0000_H	16	$FFEA\ 00D4_H$	1	16	√	√	√	√	√	√	√	√	√
TPBA0	TPBA0 duty setting register	TPBA0BUF54	0000_H	16	$FFEA\ 00D8_H$	1	16	√	√	√	√	√	√	√	√	√
TPBA0	TPBA0 duty setting register	TPBA0BUF55	0000_H	16	$FFEA\ 00DC_H$	1	16	√	√	√	√	√	√	√	√	√
TPBA0	TPBA0 duty setting register	TPBA0BUF56	0000_H	16	$FFEA\ 00E0_H$	1	16	√	√	√	√	√	√	√	√	√
TPBA0	TPBA0 duty setting register	TPBA0BUF57	0000_H	16	$FFEA\ 00E4_H$	1	16	√	√	√	√	√	√	√	√	√
TPBA0	TPBA0 duty setting register	TPBA0BUF58	0000_H	16	$FFEA\ 00E8_H$	1	16	√	√	√	√	√	√	√	√	√
TPBA0	TPBA0 duty setting register	TPBA0BUF59	0000_H	16	$FFEA\ 00EC_H$	1	16	√	√	√	√	√	√	√	√	√

Table A.1 List of Registers (62/124)

Module	Register	Symbol	Value after Reset	Number of Bits	Address	Peripheral IP group	Access Size	Reset Source*1							Access Authority*1	
								POCRES	CVMRES	EXTRES	DBRES	ECMRES	BISTRES	SWRES	SV	UM
TPBA0	TPBA0 duty setting register	TPBA0BUF60	0000_H	16	$FFEA\ 00F0_H$	1	16	√	√	√	√	√	√	√	√	√
TPBA0	TPBA0 duty setting register	TPBA0BUF61	0000_H	16	$FFEA\ 00F4_H$	1	16	√	√	√	√	√	√	√	√	√
TPBA0	TPBA0 duty setting register	TPBA0BUF62	0000_H	16	$FFEA\ 00F8_H$	1	16	√	√	√	√	√	√	√	√	√
TPBA0	TPBA0 duty setting register	TPBA0BUF63	0000_H	16	$FFEA\ 00FC_H$	1	16	√	√	√	√	√	√	√	√	√
TPBA0	TPBA0 period setting register	TPBA0CMP0	0000_H	16	$FFEA\ 0100_H$	1	16	√	√	√	√	√	√	√	√	√
TPBA0	TPBA0 pattern number setting register	TPBA0CMP1	00_H	8	$FFEA\ 0104_H$	1	8	√	√	√	√	√	√	√	√	√
TPBA0	TPBA0 timer counter register	TPBA0CNT0	$FFFF_H$	16	$FFEA\ 0108_H$	1	16	√	√	√	√	√	√	√	√	√
TPBA0	TPBA0 address counter register	TPBA0CNT1	00_H	8	$FFEA\ 010C_H$	1	8	√	√	√	√	√	√	√	√	√
TPBA0	TPBA0 reload status register	TPBA0RSF	00_H	8	$FFEA\ 0110_H$	1	8	√	√	√	√	√	√	√	√	√
TPBA0	TPBA0 reload data trigger register	TPBA0RDT	00_H	8	$FFEA\ 0114_H$	1	8	√	√	√	√	√	√	√	√	√
TPBA0	TPBA0 reload data mode register	TPBA0RDM	00_H	8	$FFEA\ 0118_H$	1	8	√	√	√	√	√	√	√	√	√
TPBA0	TPBA0 timer output register	TPBA0TO	00_H	8	$FFEA\ 011C_H$	1	8	√	√	√	√	√	√	√	√	√
TPBA0	TPBA0 timer output enable register	TPBA0TOE	00_H	8	$FFEA\ 0120_H$	1	8	√	√	√	√	√	√	√	√	√
TPBA0	TPBA0 timer output level register	TPBA0TOL	00_H	8	$FFEA\ 0124_H$	1	8	√	√	√	√	√	√	√	√	√
TPBA0	TPBA0 enable status register	TPBA0TE	00_H	8	$FFEA\ 0128_H$	1	8	√	√	√	√	√	√	√	√	√
TPBA0	TPBA0 start trigger register	TPBA0TS	00_H	8	$FFEA\ 012C_H$	1	8	√	√	√	√	√	√	√	√	√
TPBA0	TPBA0 stop trigger register	TPBA0TT	00_H	8	$FFEA\ 0130_H$	1	8	√	√	√	√	√	√	√	√	√
TPBA0	TPBA0 control register	TPBA0CTL	00_H	8	$FFEA\ 0200_H$	1	8	√	√	√	√	√	√	√	√	√
TPBA1	TPBA1 duty setting register	TPBA1BUF00	0000_H	16	$FFEA\ 1000_H$	1	16	√	√	√	√	√	√	√	√	√
TPBA1	TPBA1 duty setting register	TPBA1BUF01	0000_H	16	$FFEA\ 1004_H$	1	16	√	√	√	√	√	√	√	√	√
TPBA1	TPBA1 duty setting register	TPBA1BUF02	0000_H	16	$FFEA\ 1008_H$	1	16	√	√	√	√	√	√	√	√	√
TPBA1	TPBA1 duty setting register	TPBA1BUF03	0000_H	16	$FFEA\ 100C_H$	1	16	√	√	√	√	√	√	√	√	√
TPBA1	TPBA1 duty setting register	TPBA1BUF04	0000_H	16	$FFEA\ 1010_H$	1	16	√	√	√	√	√	√	√	√	√
TPBA1	TPBA1 duty setting register	TPBA1BUF05	0000_H	16	$FFEA\ 1014_H$	1	16	√	√	√	√	√	√	√	√	√
TPBA1	TPBA1 duty setting register	TPBA1BUF06	0000_H	16	$FFEA\ 1018_H$	1	16	√	√	√	√	√	√	√	√	√
TPBA1	TPBA1 duty setting register	TPBA1BUF07	0000_H	16	$FFEA\ 101C_H$	1	16	√	√	√	√	√	√	√	√	√
TPBA1	TPBA1 duty setting register	TPBA1BUF08	0000_H	16	$FFEA\ 1020_H$	1	16	√	√	√	√	√	√	√	√	√
TPBA1	TPBA1 duty setting register	TPBA1BUF09	0000_H	16	$FFEA\ 1024_H$	1	16	√	√	√	√	√	√	√	√	√
TPBA1	TPBA1 duty setting register	TPBA1BUF10	0000_H	16	$FFEA\ 1028_H$	1	16	√	√	√	√	√	√	√	√	√
TPBA1	TPBA1 duty setting register	TPBA1BUF11	0000_H	16	$FFEA\ 102C_H$	1	16	√	√	√	√	√	√	√	√	√
TPBA1	TPBA1 duty setting register	TPBA1BUF12	0000_H	16	$FFEA\ 1030_H$	1	16	√	√	√	√	√	√	√	√	√
TPBA1	TPBA1 duty setting register	TPBA1BUF13	0000_H	16	$FFEA\ 1034_H$	1	16	√	√	√	√	√	√	√	√	√
TPBA1	TPBA1 duty setting register	TPBA1BUF14	0000_H	16	$FFEA\ 1038_H$	1	16	√	√	√	√	√	√	√	√	√
TPBA1	TPBA1 duty setting register	TPBA1BUF15	0000_H	16	$FFEA\ 103C_H$	1	16	√	√	√	√	√	√	√	√	√
TPBA1	TPBA1 duty setting register	TPBA1BUF16	0000_H	16	$FFEA\ 1040_H$	1	16	√	√	√	√	√	√	√	√	√
TPBA1	TPBA1 duty setting register	TPBA1BUF17	0000_H	16	$FFEA\ 1044_H$	1	16	√	√	√	√	√	√	√	√	√
TPBA1	TPBA1 duty setting register	TPBA1BUF18	0000_H	16	$FFEA\ 1048_H$	1	16	√	√	√	√	√	√	√	√	√
TPBA1	TPBA1 duty setting register	TPBA1BUF19	0000_H	16	$FFEA\ 104C_H$	1	16	√	√	√	√	√	√	√	√	√
TPBA1	TPBA1 duty setting register	TPBA1BUF20	0000_H	16	$FFEA\ 1050_H$	1	16	√	√	√	√	√	√	√	√	√
TPBA1	TPBA1 duty setting register	TPBA1BUF21	0000_H	16	$FFEA\ 1054_H$	1	16	√	√	√	√	√	√	√	√	√
TPBA1	TPBA1 duty setting register	TPBA1BUF22	0000_H	16	$FFEA\ 1058_H$	1	16	√	√	√	√	√	√	√	√	√
TPBA1	TPBA1 duty setting register	TPBA1BUF23	0000_H	16	$FFEA\ 105C_H$	1	16	√	√	√	√	√	√	√	√	√
TPBA1	TPBA1 duty setting register	TPBA1BUF24	0000_H	16	$FFEA\ 1060_H$	1	16	√	√	√	√	√	√	√	√	√
TPBA1	TPBA1 duty setting register	TPBA1BUF25	0000_H	16	$FFEA\ 1064_H$	1	16	√	√	√	√	√	√	√	√	√
TPBA1	TPBA1 duty setting register	TPBA1BUF26	0000_H	16	$FFEA\ 1068_H$	1	16	√	√	√	√	√	√	√	√	√
TPBA1	TPBA1 duty setting register	TPBA1BUF27	0000_H	16	$FFEA\ 106C_H$	1	16	√	√	√	√	√	√	√	√	√
TPBA1	TPBA1 duty setting register	TPBA1BUF28	0000_H	16	$FFEA\ 1070_H$	1	16	√	√	√	√	√	√	√	√	√
TPBA1	TPBA1 duty setting register	TPBA1BUF29	0000_H	16	$FFEA\ 1074_H$	1	16	√	√	√	√	√	√	√	√	√
TPBA1	TPBA1 duty setting register	TPBA1BUF30	0000_H	16	$FFEA\ 1078_H$	1	16	√	√	√	√	√	√	√	√	√
TPBA1	TPBA1 duty setting register	TPBA1BUF31	0000_H	16	$FFEA\ 107C_H$	1	16	√	√	√	√	√	√	√	√	√
TPBA1	TPBA1 duty setting register	TPBA1BUF32	0000_H	16	$FFEA\ 1080_H$	1	16	√	√	√	√	√	√	√	√	√
TPBA1	TPBA1 duty setting register	TPBA1BUF33	0000_H	16	$FFEA\ 1084_H$	1	16	√	√	√	√	√	√	√	√	√
TPBA1	TPBA1 duty setting register	TPBA1BUF34	0000_H	16	$FFEA\ 1088_H$	1	16	√	√	√	√	√	√	√	√	√

Table A.1 List of Registers (63/124)

Module	Register	Symbol	Value after Reset	Number of Bits	Address	Peripheral IP group	Access Size	Reset Source*1							Access Authority*1	
								POCRES	CVMRES	EXTRES	DBRES	ECMRES	BISTRES	SWRES	SV	UM
TPBA1	TPBA1 duty setting register	TPBA1BUF35	0000_H	16	$FFEA\ 108C_H$	1	16	√	√	√	√	√	√	√	√	√
TPBA1	TPBA1 duty setting register	TPBA1BUF36	0000_H	16	$FFEA\ 1090_H$	1	16	√	√	√	√	√	√	√	√	√
TPBA1	TPBA1 duty setting register	TPBA1BUF37	0000_H	16	$FFEA\ 1094_H$	1	16	√	√	√	√	√	√	√	√	√
TPBA1	TPBA1 duty setting register	TPBA1BUF38	0000_H	16	$FFEA\ 1098_H$	1	16	√	√	√	√	√	√	√	√	√
TPBA1	TPBA1 duty setting register	TPBA1BUF39	0000_H	16	$FFEA\ 109C_H$	1	16	√	√	√	√	√	√	√	√	√
TPBA1	TPBA1 duty setting register	TPBA1BUF40	0000_H	16	$FFEA\ 10A0_H$	1	16	√	√	√	√	√	√	√	√	√
TPBA1	TPBA1 duty setting register	TPBA1BUF41	0000_H	16	$FFEA\ 10A4_H$	1	16	√	√	√	√	√	√	√	√	√
TPBA1	TPBA1 duty setting register	TPBA1BUF42	0000_H	16	$FFEA\ 10A8_H$	1	16	√	√	√	√	√	√	√	√	√
TPBA1	TPBA1 duty setting register	TPBA1BUF43	0000_H	16	$FFEA\ 10AC_H$	1	16	√	√	√	√	√	√	√	√	√
TPBA1	TPBA1 duty setting register	TPBA1BUF44	0000_H	16	$FFEA\ 10B0_H$	1	16	√	√	√	√	√	√	√	√	√
TPBA1	TPBA1 duty setting register	TPBA1BUF45	0000_H	16	$FFEA\ 10B4_H$	1	16	√	√	√	√	√	√	√	√	√
TPBA1	TPBA1 duty setting register	TPBA1BUF46	0000_H	16	$FFEA\ 10B8_H$	1	16	√	√	√	√	√	√	√	√	√
TPBA1	TPBA1 duty setting register	TPBA1BUF47	0000_H	16	$FFEA\ 10BC_H$	1	16	√	√	√	√	√	√	√	√	√
TPBA1	TPBA1 duty setting register	TPBA1BUF48	0000_H	16	$FFEA\ 10C0_H$	1	16	√	√	√	√	√	√	√	√	√
TPBA1	TPBA1 duty setting register	TPBA1BUF49	0000_H	16	$FFEA\ 10C4_H$	1	16	√	√	√	√	√	√	√	√	√
TPBA1	TPBA1 duty setting register	TPBA1BUF50	0000_H	16	$FFEA\ 10C8_H$	1	16	√	√	√	√	√	√	√	√	√
TPBA1	TPBA1 duty setting register	TPBA1BUF51	0000_H	16	$FFEA\ 10CC_H$	1	16	√	√	√	√	√	√	√	√	√
TPBA1	TPBA1 duty setting register	TPBA1BUF52	0000_H	16	$FFEA\ 10D0_H$	1	16	√	√	√	√	√	√	√	√	√
TPBA1	TPBA1 duty setting register	TPBA1BUF53	0000_H	16	$FFEA\ 10D4_H$	1	16	√	√	√	√	√	√	√	√	√
TPBA1	TPBA1 duty setting register	TPBA1BUF54	0000_H	16	$FFEA\ 10D8_H$	1	16	√	√	√	√	√	√	√	√	√
TPBA1	TPBA1 duty setting register	TPBA1BUF55	0000_H	16	$FFEA\ 10DC_H$	1	16	√	√	√	√	√	√	√	√	√
TPBA1	TPBA1 duty setting register	TPBA1BUF56	0000_H	16	$FFEA\ 10E0_H$	1	16	√	√	√	√	√	√	√	√	√
TPBA1	TPBA1 duty setting register	TPBA1BUF57	0000_H	16	$FFEA\ 10E4_H$	1	16	√	√	√	√	√	√	√	√	√
TPBA1	TPBA1 duty setting register	TPBA1BUF58	0000_H	16	$FFEA\ 10E8_H$	1	16	√	√	√	√	√	√	√	√	√
TPBA1	TPBA1 duty setting register	TPBA1BUF59	0000_H	16	$FFEA\ 10EC_H$	1	16	√	√	√	√	√	√	√	√	√
TPBA1	TPBA1 duty setting register	TPBA1BUF60	0000_H	16	$FFEA\ 10F0_H$	1	16	√	√	√	√	√	√	√	√	√
TPBA1	TPBA1 duty setting register	TPBA1BUF61	0000_H	16	$FFEA\ 10F4_H$	1	16	√	√	√	√	√	√	√	√	√
TPBA1	TPBA1 duty setting register	TPBA1BUF62	0000_H	16	$FFEA\ 10F8_H$	1	16	√	√	√	√	√	√	√	√	√
TPBA1	TPBA1 duty setting register	TPBA1BUF63	0000_H	16	$FFEA\ 10FC_H$	1	16	√	√	√	√	√	√	√	√	√
TPBA1	TPBA1 period setting register	TPBA1CMP0	0000_H	16	$FFEA\ 1100_H$	1	16	√	√	√	√	√	√	√	√	√
TPBA1	TPBA1 pattern number setting register	TPBA1CMP1	00_H	8	$FFEA\ 1104_H$	1	8	√	√	√	√	√	√	√	√	√
TPBA1	TPBA1 timer counter register	TPBA1CNT0	$FFFF_H$	16	$FFEA\ 1108_H$	1	16	√	√	√	√	√	√	√	√	√
TPBA1	TPBA1 address counter register	TPBA1CNT1	00_H	8	$FFEA\ 110C_H$	1	8	√	√	√	√	√	√	√	√	√
TPBA1	TPBA1 reload status register	TPBA1RSF	00_H	8	$FFEA\ 1110_H$	1	8	√	√	√	√	√	√	√	√	√
TPBA1	TPBA1 reload data trigger register	TPBA1RDT	00_H	8	$FFEA\ 1114_H$	1	8	√	√	√	√	√	√	√	√	√
TPBA1	TPBA1 reload data mode register	TPBA1RDM	00_H	8	$FFEA\ 1118_H$	1	8	√	√	√	√	√	√	√	√	√
TPBA1	TPBA1 timer output register	TPBA1TO	00_H	8	$FFEA\ 111C_H$	1	8	√	√	√	√	√	√	√	√	√
TPBA1	TPBA1 timer output enable register	TPBA1TOE	00_H	8	$FFEA\ 1120_H$	1	8	√	√	√	√	√	√	√	√	√
TPBA1	TPBA1 timer output level register	TPBA1TOL	00_H	8	$FFEA\ 1124_H$	1	8	√	√	√	√	√	√	√	√	√
TPBA1	TPBA1 enable status register	TPBA1TE	00_H	8	$FFEA\ 1128_H$	1	8	√	√	√	√	√	√	√	√	√
TPBA1	TPBA1 start trigger register	TPBA1TS	00_H	8	$FFEA\ 112C_H$	1	8	√	√	√	√	√	√	√	√	√
TPBA1	TPBA1 stop trigger register	TPBA1TT	00_H	8	$FFEA\ 1130_H$	1	8	√	√	√	√	√	√	√	√	√
TPBA1	TPBA1 control register	TPBA1CTL	00_H	8	$FFEA\ 1200_H$	1	8	√	√	√	√	√	√	√	√	√
ADCD0	Virtual channel register 00	ADCD0VCR00	$0000\ 0000_H$	32	$FFF2\ 0000_H$	3	32	√	√	√	√	√	√	√	√	√
ADCD0	Virtual channel register 01	ADCD0VCR01	$0000\ 0000_H$	32	$FFF2\ 0004_H$	3	32	√	√	√	√	√	√	√	√	√
ADCD0	Virtual channel register 02	ADCD0VCR02	$0000\ 0000_H$	32	$FFF2\ 0008_H$	3	32	√	√	√	√	√	√	√	√	√
ADCD0	Virtual channel register 03	ADCD0VCR03	$0000\ 0000_H$	32	$FFF2\ 000C_H$	3	32	√	√	√	√	√	√	√	√	√
ADCD0	Virtual channel register 04	ADCD0VCR04	$0000\ 0000_H$	32	$FFF2\ 0010_H$	3	32	√	√	√	√	√	√	√	√	√
ADCD0	Virtual channel register 05	ADCD0VCR05	$0000\ 0000_H$	32	$FFF2\ 0014_H$	3	32	√	√	√	√	√	√	√	√	√
ADCD0	Virtual channel register 06	ADCD0VCR06	$0000\ 0000_H$	32	$FFF2\ 0018_H$	3	32	√	√	√	√	√	√	√	√	√
ADCD0	Virtual channel register 07	ADCD0VCR07	$0000\ 0000_H$	32	$FFF2\ 001C_H$	3	32	√	√	√	√	√	√	√	√	√
ADCD0	Virtual channel register 08	ADCD0VCR08	$0000\ 0000_H$	32	$FFF2\ 0020_H$	3	32	√	√	√	√	√	√	√	√	√
ADCD0	Virtual channel register 09	ADCD0VCR09	$0000\ 0000_H$	32	$FFF2\ 0024_H$	3	32	√	√	√	√	√	√	√	√	√

Table A.1 List of Registers (64/124)

Module	Register	Symbol	Value after Reset	Number of Bits	Address	Peripheral IP group	Access Size	Reset Source*1							Access Authority*1	
								POCRES	CVMRES	EXTRES	DBRES	ECMRES	BISTRES	SWRES	SV	UM
ADCD0	Virtual channel register 10	ADCD0VCR10	$0000\ 0000_H$	32	$FFF2\ 0028_H$	3	32	√	√	√	√	√	√	√	√	√
ADCD0	Virtual channel register 11	ADCD0VCR11	$0000\ 0000_H$	32	$FFF2\ 002C_H$	3	32	√	√	√	√	√	√	√	√	√
ADCD0	Virtual channel register 12	ADCD0VCR12	$0000\ 0000_H$	32	$FFF2\ 0030_H$	3	32	√	√	√	√	√	√	√	√	√
ADCD0	Virtual channel register 13	ADCD0VCR13	$0000\ 0000_H$	32	$FFF2\ 0034_H$	3	32	√	√	√	√	√	√	√	√	√
ADCD0	Virtual channel register 14	ADCD0VCR14	$0000\ 0000_H$	32	$FFF2\ 0038_H$	3	32	√	√	√	√	√	√	√	√	√
ADCD0	Virtual channel register 15	ADCD0VCR15	$0000\ 0000_H$	32	$FFF2\ 003C_H$	3	32	√	√	√	√	√	√	√	√	√
ADCD0	Virtual channel register 16	ADCD0VCR16	$0000\ 0000_H$	32	$FFF2\ 0040_H$	3	32	√	√	√	√	√	√	√	√	√
ADCD0	Virtual channel register 17	ADCD0VCR17	$0000\ 0000_H$	32	$FFF2\ 0044_H$	3	32	√	√	√	√	√	√	√	√	√
ADCD0	Virtual channel register 18	ADCD0VCR18	$0000\ 0000_H$	32	$FFF2\ 0048_H$	3	32	√	√	√	√	√	√	√	√	√
ADCD0	Virtual channel register 19	ADCD0VCR19	$0000\ 0000_H$	32	$FFF2\ 004C_H$	3	32	√	√	√	√	√	√	√	√	√
ADCD0	Virtual channel register 20	ADCD0VCR20	$0000\ 0000_H$	32	$FFF2\ 0050_H$	3	32	√	√	√	√	√	√	√	√	√
ADCD0	Virtual channel register 21	ADCD0VCR21	$0000\ 0000_H$	32	$FFF2\ 0054_H$	3	32	√	√	√	√	√	√	√	√	√
ADCD0	Virtual channel register 22	ADCD0VCR22	$0000\ 0000_H$	32	$FFF2\ 0058_H$	3	32	√	√	√	√	√	√	√	√	√
ADCD0	Virtual channel register 23	ADCD0VCR23	$0000\ 0000_H$	32	$FFF2\ 005C_H$	3	32	√	√	√	√	√	√	√	√	√
ADCD0	Data register 00	ADCD0DR00	$0000\ 0000_H$	32	$FFF2\ 0100_H$	3	32	√	√	√	√	√	√	√	√	√
ADCD0	Data register 02	ADCD0DR02	$0000\ 0000_H$	32	$FFF2\ 0104_H$	3	32	√	√	√	√	√	√	√	√	√
ADCD0	Data register 04	ADCD0DR04	$0000\ 0000_H$	32	$FFF2\ 0108_H$	3	32	√	√	√	√	√	√	√	√	√
ADCD0	Data register 06	ADCD0DR06	$0000\ 0000_H$	32	$FFF2\ 010C_H$	3	32	√	√	√	√	√	√	√	√	√
ADCD0	Data register 08	ADCD0DR08	$0000\ 0000_H$	32	$FFF2\ 0110_H$	3	32	√	√	√	√	√	√	√	√	√
ADCD0	Data register 10	ADCD0DR10	$0000\ 0000_H$	32	$FFF2\ 0114_H$	3	32	√	√	√	√	√	√	√	√	√
ADCD0	Data register 12	ADCD0DR12	$0000\ 0000_H$	32	$FFF2\ 0118_H$	3	32	√	√	√	√	√	√	√	√	√
ADCD0	Data register 14	ADCD0DR14	$0000\ 0000_H$	32	$FFF2\ 011C_H$	3	32	√	√	√	√	√	√	√	√	√
ADCD0	Data register 16	ADCD0DR16	$0000\ 0000_H$	32	$FFF2\ 0120_H$	3	32	√	√	√	√	√	√	√	√	√
ADCD0	Data register 18	ADCD0DR18	$0000\ 0000_H$	32	$FFF2\ 0124_H$	3	32	√	√	√	√	√	√	√	√	√
ADCD0	Data register 20	ADCD0DR20	$0000\ 0000_H$	32	$FFF2\ 0128_H$	3	32	√	√	√	√	√	√	√	√	√
ADCD0	Data register 22	ADCD0DR22	$0000\ 0000_H$	32	$FFF2\ 012C_H$	3	32	√	√	√	√	√	√	√	√	√
ADCD0	Data supplementary information register 00	ADCD0DIR00	$0000\ 0000_H$	32	$FFF2\ 0200_H$	3	32	√	√	√	√	√	√	√	√	√
ADCD0	Data supplementary information register 01	ADCD0DIR01	$0000\ 0000_H$	32	$FFF2\ 0204_H$	3	32	√	√	√	√	√	√	√	√	√
ADCD0	Data supplementary information register 02	ADCD0DIR02	$0000\ 0000_H$	32	$FFF2\ 0208_H$	3	32	√	√	√	√	√	√	√	√	√
ADCD0	Data supplementary information register 03	ADCD0DIR03	$0000\ 0000_H$	32	$FFF2\ 020C_H$	3	32	√	√	√	√	√	√	√	√	√
ADCD0	Data supplementary information register 04	ADCD0DIR04	$0000\ 0000_H$	32	$FFF2\ 0210_H$	3	32	√	√	√	√	√	√	√	√	√
ADCD0	Data supplementary information register 05	ADCD0DIR05	$0000\ 0000_H$	32	$FFF2\ 0214_H$	3	32	√	√	√	√	√	√	√	√	√
ADCD0	Data supplementary information register 06	ADCD0DIR06	$0000\ 0000_H$	32	$FFF2\ 0218_H$	3	32	√	√	√	√	√	√	√	√	√
ADCD0	Data supplementary information register 07	ADCD0DIR07	$0000\ 0000_H$	32	$FFF2\ 021C_H$	3	32	√	√	√	√	√	√	√	√	√
ADCD0	Data supplementary information register 08	ADCD0DIR08	$0000\ 0000_H$	32	$FFF2\ 0220_H$	3	32	√	√	√	√	√	√	√	√	√
ADCD0	Data supplementary information register 09	ADCD0DIR09	$0000\ 0000_H$	32	$FFF2\ 0224_H$	3	32	√	√	√	√	√	√	√	√	√
ADCD0	Data supplementary information register 10	ADCD0DIR10	$0000\ 0000_H$	32	$FFF2\ 0228_H$	3	32	√	√	√	√	√	√	√	√	√
ADCD0	Data supplementary information register 11	ADCD0DIR11	$0000\ 0000_H$	32	$FFF2\ 022C_H$	3	32	√	√	√	√	√	√	√	√	√
ADCD0	Data supplementary information register 12	ADCD0DIR12	$0000\ 0000_H$	32	$FFF2\ 0230_H$	3	32	√	√	√	√	√	√	√	√	√
ADCD0	Data supplementary information register 13	ADCD0DIR13	$0000\ 0000_H$	32	$FFF2\ 0234_H$	3	32	√	√	√	√	√	√	√	√	√
ADCD0	Data supplementary information register 14	ADCD0DIR14	$0000\ 0000_H$	32	$FFF2\ 0238_H$	3	32	√	√	√	√	√	√	√	√	√
ADCD0	Data supplementary information register 15	ADCD0DIR15	$0000\ 0000_H$	32	$FFF2\ 023C_H$	3	32	√	√	√	√	√	√	√	√	√
ADCD0	Data supplementary information register 16	ADCD0DIR16	$0000\ 0000_H$	32	$FFF2\ 0240_H$	3	32	√	√	√	√	√	√	√	√	√
ADCD0	Data supplementary information register 17	ADCD0DIR17	$0000\ 0000_H$	32	$FFF2\ 0244_H$	3	32	√	√	√	√	√	√	√	√	√
ADCD0	Data supplementary information register 18	ADCD0DIR18	$0000\ 0000_H$	32	$FFF2\ 0248_H$	3	32	√	√	√	√	√	√	√	√	√
ADCD0	Data supplementary information register 19	ADCD0DIR19	$0000\ 0000_H$	32	$FFF2\ 024C_H$	3	32	√	√	√	√	√	√	√	√	√
ADCD0	Data supplementary information register 20	ADCD0DIR20	$0000\ 0000_H$	32	$FFF2\ 0250_H$	3	32	√	√	√	√	√	√	√	√	√
ADCD0	Data supplementary information register 21	ADCD0DIR21	$0000\ 0000_H$	32	$FFF2\ 0254_H$	3	32	√	√	√	√	√	√	√	√	√
ADCD0	Data supplementary information register 22	ADCD0DIR22	$0000\ 0000_H$	32	$FFF2\ 0258_H$	3	32	√	√	√	√	√	√	√	√	√
ADCD0	Data supplementary information register 23	ADCD0DIR23	$0000\ 0000_H$	32	$FFF2\ 025C_H$	3	32	√	√	√	√	√	√	√	√	√
ADCD0	AD synchronization start control register	ADCD0ADSYNSTCR	00_H	8	$FFF2\ 0300_H$	3	8	√	√	√	√	√	√	√	√	√
ADCD0	AD timer synchronization start control register	ADCD0ADTSYNSTCR	00_H	8	$FFF2\ 0304_H$	3	8	√	√	√	√	√	√	√	√	√
ADCD0	A/D conversion time control register	ADCD0SMPCR	0000_H	16	$FFF2\ 0340_H$	3	16	√	√	√	√	√	√	√	√	√

Table A.1 List of Registers (65/124)

Module	Register	Symbol	Value after Reset	Number of Bits	Address	Peripheral IP group	Access Size	Reset Source*1							Access Authority*1	
								POCRES	CVMRES	EXTRES	DBRES	ECMRES	BISTRES	SWRES	SV	UM
ADCD0	AD halt register	ADCD0ADHALTR	00_H	8	$FFF2\ 0380_H$	3	8	√	√	√	√	√	√	√	√	√
ADCD0	AD control register 1	ADCD0ADCR1	00_H	8	$FFF2\ 0384_H$	3	8	√	√	√	√	√	√	√	√	√
ADCD0	MPX current control register	ADCD0MPXCURCR	00_H	8	$FFF2\ 0388_H$	3	8	√	√	√	√	√	√	√	√	√
ADCD0	MPX current register	ADCD0MPXCURR	$0000\ 0000_H$	32	$FFF2\ 038C_H$	3	32	√	√	√	√	√	√	√	√	√
ADCD0	MPX optional wait register	ADCD0MPXOWR	00_H	8	$FFF2\ 0390_H$	3	8	√	√	√	√	√	√	√	√	√
ADCD0	AD control register 2	ADCD0ADCR2	00_H	8	$FFF2\ 0398_H$	3	8	√	√	√	√	√	√	√	√	√
ADCD0	A/D conversion monitor virtual channel pointer 0	ADCD0ADENDP0	00_H	8	$FFF2\ 03A0_H$	3	8	√	√	√	√	√	√	√	√	√
ADCD0	A/D conversion monitor virtual channel pointer 1	ADCD0ADENDP1	00_H	8	$FFF2\ 03A4_H$	3	8	√	√	√	√	√	√	√	√	√
ADCD0	A/D conversion monitor virtual channel pointer 2	ADCD0ADENDP2	00_H	8	$FFF2\ 03A8_H$	3	8	√	√	√	√	√	√	√	√	√
ADCD0	A/D conversion monitor virtual channel pointer 3	ADCD0ADENDP3	00_H	8	$FFF2\ 03AC_H$	3	8	√	√	√	√	√	√	√	√	√
ADCD0	A/D conversion monitor virtual channel pointer 4	ADCD0ADENDP4	00_H	8	$FFF2\ 03B0_H$	3	8	√	√	√	√	√	√	√	√	√
ADCD0	Safety control register	ADCD0SFTCR	00_H	8	$FFF2\ 03C0_H$	3	8	√	√	√	√	√	√	√	√	√
ADCD0	Pin level self-diagnostic control register	ADCD0TDCR	00_H	8	$FFF2\ 03C4_H$	3	8	√	√	√	√	√	√	√	√	√
ADCD0	Wiring-break detection control register	ADCD0ODCR	$0000\ 0000_H$	32	$FFF2\ 03C8_H$	3	32	√	√	√	√	√	√	√	√	√
ADCD0	Upper-limit/lower-limit table register 0	ADCD0ULLMTBR0	$7FFE\ 0000_H$	32	$FFF2\ 03CC_H$	3	32	√	√	√	√	√	√	√	√	√
ADCD0	Upper-limit/lower-limit table register 1	ADCD0ULLMTBR1	$7FFE\ 0000_H$	32	$FFF2\ 03D0_H$	3	32	√	√	√	√	√	√	√	√	√
ADCD0	Upper-limit/lower-limit table register 2	ADCD0ULLMTBR2	$7FFE\ 0000_H$	32	$FFF2\ 03D4_H$	3	32	√	√	√	√	√	√	√	√	√
ADCD0	Error clear register	ADCD0ECR	00_H	8	$FFF2\ 03D8_H$	3	8	√	√	√	√	√	√	√	√	√
ADCD0	Upper-limit/lower-limit error register	ADCD0ULER	00_H	8	$FFF2\ 03DC_H$	3	8	√	√	√	√	√	√	√	√	√
ADCD0	Overwrite error register	ADCD0OWER	00_H	8	$FFF2\ 03E0_H$	3	8	√	√	√	√	√	√	√	√	√
ADCD0	Parity error register	ADCD0PER	00_H	8	$FFF2\ 03E4_H$	3	8	√	√	√	√	√	√	√	√	√
ADCD0	ID error register	ADCD0IDER	00_H	8	$FFF2\ 03E8_H$	3	8	√	√	√	√	√	√	√	√	√
ADCD0	T&H sampling start control register	ADCD0THSMPSTCR	00_H	8	$FFF2\ 0400_H$	3	8	√	√	√	√	√	√	√	√	√
ADCD0	T&H stop control register	ADCD0THSTPCR	00_H	8	$FFF2\ 0404_H$	3	8	√	√	√	√	√	√	√	√	√
ADCD0	T&H control register	ADCD0THCR	00_H	8	$FFF2\ 0408_H$	3	8	√	√	√	√	√	√	√	√	√
ADCD0	T&H group A hold start control register	ADCD0THAHLDSTCR	00_H	8	$FFF2\ 0410_H$	3	8	√	√	√	√	√	√	√	√	√
ADCD0	T&H group B hold start control register	ADCD0THBHLDSTCR	00_H	8	$FFF2\ 0414_H$	3	8	√	√	√	√	√	√	√	√	√
ADCD0	T&H group A control register	ADCD0THACR	00_H	8	$FFF2\ 0420_H$	3	8	√	√	√	√	√	√	√	√	√
ADCD0	T&H group B control register	ADCD0THBCR	00_H	8	$FFF2\ 0424_H$	3	8	√	√	√	√	√	√	√	√	√
ADCD0	T&H enable register	ADCD0THER	00_H	8	$FFF2\ 0430_H$	3	8	√	√	√	√	√	√	√	√	√
ADCD0	T&H group select register	ADCD0THGSR	0000_H	16	$FFF2\ 0434_H$	3	16	√	√	√	√	√	√	√	√	√
ADCD0	Scan group 0 start control register 0	ADCD0SGSTCR0	00_H	8	$FFF2\ 0480_H$	3	8	√	√	√	√	√	√	√	√	√
ADCD0	Scan group 0 control register	ADCD0SGCR0	00_H	8	$FFF2\ 0490_H$	3	8	√	√	√	√	√	√	√	√	√
ADCD0	Scan group 0 start virtual channel pointer	ADCD0SGVCSP0	00_H	8	$FFF2\ 0494_H$	3	8	√	√	√	√	√	√	√	√	√
ADCD0	Scan group 0 end virtual channel pointer	ADCD0SGVCEP0	00_H	8	$FFF2\ 0498_H$	3	8	√	√	√	√	√	√	√	√	√
ADCD0	Scan group 0 multicycle register	ADCD0SGMCYCR0	00_H	8	$FFF2\ 049C_H$	3	8	√	√	√	√	√	√	√	√	√
ADCD0	Scan group 0 status register	ADCD0SGSR0	00_H	8	$FFF2\ 04A4_H$	3	8	√	√	√	√	√	√	√	√	√
ADCD0	Scan group 0 upper-limit/lower-limit table select register	ADCD0ULLMSR0	00_H	8	$FFF2\ 04B0_H$	3	8	√	√	√	√	√	√	√	√	√
ADCD0	Scan group 1 start control register	ADCD0SGSTCR1	00_H	8	$FFF2\ 0500_H$	3	8	√	√	√	√	√	√	√	√	√
ADCD0	Scan group 1 control register	ADCD0SGCR1	00_H	8	$FFF2\ 0510_H$	3	8	√	√	√	√	√	√	√	√	√
ADCD0	Scan group 1 start virtual channel pointer	ADCD0SGVCSP1	00_H	8	$FFF2\ 0514_H$	3	8	√	√	√	√	√	√	√	√	√
ADCD0	Scan group 1 end virtual channel pointer	ADCD0SGVCEP1	00_H	8	$FFF2\ 0518_H$	3	8	√	√	√	√	√	√	√	√	√
ADCD0	Scan group 1 multicycle register	ADCD0SGMCYCR1	00_H	8	$FFF2\ 051C_H$	3	8	√	√	√	√	√	√	√	√	√
ADCD0	Scan group 1 status register	ADCD0SGSR1	00_H	8	$FFF2\ 0524_H$	3	8	√	√	√	√	√	√	√	√	√
ADCD0	Scan group 1 upper-limit/lower-limit table select register	ADCD0ULLMSR1	00_H	8	$FFF2\ 0530_H$	3	8	√	√	√	√	√	√	√	√	√
ADCD0	Scan group 2 start control register	ADCD0SGSTCR2	00_H	8	$FFF2\ 0580_H$	3	8	√	√	√	√	√	√	√	√	√
ADCD0	Scan group 2 control register	ADCD0SGCR2	00_H	8	$FFF2\ 0590_H$	3	8	√	√	√	√	√	√	√	√	√
ADCD0	Scan group 2 start virtual channel pointer	ADCD0SGVCSP2	00_H	8	$FFF2\ 0594_H$	3	8	√	√	√	√	√	√	√	√	√
ADCD0	Scan group 2 end virtual channel pointer	ADCD0SGVCEP2	00_H	8	$FFF2\ 0598_H$	3	8	√	√	√	√	√	√	√	√	√
ADCD0	Scan group 2 multicycle register	ADCD0SGMCYCR2	00_H	8	$FFF2\ 059C_H$	3	8	√	√	√	√	√	√	√	√	√
ADCD0	Scan group 2 status register	ADCD0SGSR2	00_H	8	$FFF2\ 05A4_H$	3	8	√	√	√	√	√	√	√	√	√
ADCD0	Scan group 2 upper-limit/lower-limit table select register	ADCD0ULLMSR2	00_H	8	$FFF2\ 05B0_H$	3	8	√	√	√	√	√	√	√	√	√
ADCD0	Scan group 3 start control register	ADCD0SGSTCR3	00_H	8	$FFF2\ 0600_H$	3	8	√	√	√	√	√	√	√	√	√

Table A.1 List of Registers (66/124)

Module	Register	Symbol	Value after Reset	Number of Bits	Address	Peripheral IP group	Access Size	Reset Source*1							Access Authority*1	
								POCRES	CVMRES	EXTRES	DBRES	ECMRES	BISTRES	SWRES	SV	UM
ADCD0	AD timer 3 start control register	ADCD0ADTSTCR3	00_H	8	$FFF2\ 0608_H$	3	8	√	√	√	√	√	√	√	√	√
ADCD0	AD timer 3 end control register	ADCD0ADTENDCR3	00_H	8	$FFF2\ 060C_H$	3	8	√	√	√	√	√	√	√	√	√
ADCD0	Scan group 3 control register	ADCD0SGCR3	00_H	8	$FFF2\ 0610_H$	3	8	√	√	√	√	√	√	√	√	√
ADCD0	Scan group 3 start virtual channel pointer	ADCD0SGVCSP3	00_H	8	$FFF2\ 0614_H$	3	8	√	√	√	√	√	√	√	√	√
ADCD0	Scan group 3 end virtual channel pointer	ADCD0SGVCEP3	00_H	8	$FFF2\ 0618_H$	3	8	√	√	√	√	√	√	√	√	√
ADCD0	Scan group 3 multicycle register	ADCD0SGMCYCR3	00_H	8	$FFF2\ 061C_H$	3	8	√	√	√	√	√	√	√	√	√
ADCD0	Scan group 3 status register	ADCD0SGSR3	00_H	8	$FFF2\ 0624_H$	3	8	√	√	√	√	√	√	√	√	√
ADCD0	AD timer initial phase register 3	ADCD0ADTIPR3	$0000\ 0000_H$	32	$FFF2\ 0628_H$	3	32	√	√	√	√	√	√	√	√	√
ADCD0	AD timer period register 3	ADCD0ADTPRR3	$001F\ FFFF_H$	32	$FFF2\ 062C_H$	3	32	√	√	√	√	√	√	√	√	√
ADCD0	Scan group 3 upper-limit/lower-limit table select register	ADCD0ULLMSR3	00_H	8	$FFF2\ 0630_H$	3	8	√	√	√	√	√	√	√	√	√
ADCD0	Scan group 4 start control register	ADCD0SGSTCR4	00_H	8	$FFF2\ 0680_H$	3	8	√	√	√	√	√	√	√	√	√
ADCD0	AD timer 4 start control register	ADCD0ADTSTCR4	00_H	8	$FFF2\ 0688_H$	3	8	√	√	√	√	√	√	√	√	√
ADCD0	AD timer 4 end control register	ADCD0ADTENDCR4	00_H	8	$FFF2\ 068C_H$	3	8	√	√	√	√	√	√	√	√	√
ADCD0	Scan group 4 control register	ADCD0SGCR4	00_H	8	$FFF2\ 0690_H$	3	8	√	√	√	√	√	√	√	√	√
ADCD0	Scan group 4 start virtual channel pointer	ADCD0SGVCSP4	00_H	8	$FFF2\ 0694_H$	3	8	√	√	√	√	√	√	√	√	√
ADCD0	Scan group 4 end virtual channel pointer	ADCD0SGVCEP4	00_H	8	$FFF2\ 0698_H$	3	8	√	√	√	√	√	√	√	√	√
ADCD0	Scan group 4 multicycle register	ADCD0SGMCYCR4	00_H	8	$FFF2\ 069C_H$	3	8	√	√	√	√	√	√	√	√	√
ADCD0	Scan group 4 status register	ADCD0SGSR4	00_H	8	$FFF2\ 06A4_H$	3	8	√	√	√	√	√	√	√	√	√
ADCD0	AD timer initial phase register 4	ADCD0ADTIPR4	$0000\ 0000_H$	32	$FFF2\ 06A8_H$	3	32	√	√	√	√	√	√	√	√	√
ADCD0	AD timer period register 4	ADCD0ADTPRR4	$001F\ FFFF_H$	32	$FFF2\ 06AC_H$	3	32	√	√	√	√	√	√	√	√	√
ADCD0	Scan group 4 upper-limit/lower-limit table select register	ADCD0ULLMSR4	00_H	8	$FFF2\ 06B0_H$	3	8	√	√	√	√	√	√	√	√	√
ADCD1	Virtual channel register 00	ADCD1VCR00	$0000\ 0000_H$	32	$FFF2\ 1000_H$	3	32	√	√	√	√	√	√	√	√	√
ADCD1	Virtual channel register 01	ADCD1VCR01	$0000\ 0000_H$	32	$FFF2\ 1004_H$	3	32	√	√	√	√	√	√	√	√	√
ADCD1	Virtual channel register 02	ADCD1VCR02	$0000\ 0000_H$	32	$FFF2\ 1008_H$	3	32	√	√	√	√	√	√	√	√	√
ADCD1	Virtual channel register 03	ADCD1VCR03	$0000\ 0000_H$	32	$FFF2\ 100C_H$	3	32	√	√	√	√	√	√	√	√	√
ADCD1	Virtual channel register 04	ADCD1VCR04	$0000\ 0000_H$	32	$FFF2\ 1010_H$	3	32	√	√	√	√	√	√	√	√	√
ADCD1	Virtual channel register 05	ADCD1VCR05	$0000\ 0000_H$	32	$FFF2\ 1014_H$	3	32	√	√	√	√	√	√	√	√	√
ADCD1	Virtual channel register 06	ADCD1VCR06	$0000\ 0000_H$	32	$FFF2\ 1018_H$	3	32	√	√	√	√	√	√	√	√	√
ADCD1	Virtual channel register 07	ADCD1VCR07	$0000\ 0000_H$	32	$FFF2\ 101C_H$	3	32	√	√	√	√	√	√	√	√	√
ADCD1	Virtual channel register 08	ADCD1VCR08	$0000\ 0000_H$	32	$FFF2\ 1020_H$	3	32	√	√	√	√	√	√	√	√	√
ADCD1	Virtual channel register 09	ADCD1VCR09	$0000\ 0000_H$	32	$FFF2\ 1024_H$	3	32	√	√	√	√	√	√	√	√	√
ADCD1	Virtual channel register 10	ADCD1VCR10	$0000\ 0000_H$	32	$FFF2\ 1028_H$	3	32	√	√	√	√	√	√	√	√	√
ADCD1	Virtual channel register 11	ADCD1VCR11	$0000\ 0000_H$	32	$FFF2\ 102C_H$	3	32	√	√	√	√	√	√	√	√	√
ADCD1	Virtual channel register 12	ADCD1VCR12	$0000\ 0000_H$	32	$FFF2\ 1030_H$	3	32	√	√	√	√	√	√	√	√	√
ADCD1	Virtual channel register 13	ADCD1VCR13	$0000\ 0000_H$	32	$FFF2\ 1034_H$	3	32	√	√	√	√	√	√	√	√	√
ADCD1	Virtual channel register 14	ADCD1VCR14	$0000\ 0000_H$	32	$FFF2\ 1038_H$	3	32	√	√	√	√	√	√	√	√	√
ADCD1	Virtual channel register 15	ADCD1VCR15	$0000\ 0000_H$	32	$FFF2\ 103C_H$	3	32	√	√	√	√	√	√	√	√	√
ADCD1	Virtual channel register 16	ADCD1VCR16	$0000\ 0000_H$	32	$FFF2\ 1040_H$	3	32	√	√	√	√	√	√	√	√	√
ADCD1	Virtual channel register 17	ADCD1VCR17	$0000\ 0000_H$	32	$FFF2\ 1044_H$	3	32	√	√	√	√	√	√	√	√	√
ADCD1	Virtual channel register 18	ADCD1VCR18	$0000\ 0000_H$	32	$FFF2\ 1048_H$	3	32	√	√	√	√	√	√	√	√	√
ADCD1	Virtual channel register 19	ADCD1VCR19	$0000\ 0000_H$	32	$FFF2\ 104C_H$	3	32	√	√	√	√	√	√	√	√	√
ADCD1	Virtual channel register 20	ADCD1VCR20	$0000\ 0000_H$	32	$FFF2\ 1050_H$	3	32	√	√	√	√	√	√	√	√	√
ADCD1	Virtual channel register 21	ADCD1VCR21	$0000\ 0000_H$	32	$FFF2\ 1054_H$	3	32	√	√	√	√	√	√	√	√	√
ADCD1	Virtual channel register 22	ADCD1VCR22	$0000\ 0000_H$	32	$FFF2\ 1058_H$	3	32	√	√	√	√	√	√	√	√	√
ADCD1	Virtual channel register 23	ADCD1VCR23	$0000\ 0000_H$	32	$FFF2\ 105C_H$	3	32	√	√	√	√	√	√	√	√	√
ADCD1	Data register 00	ADCD1DR00	$0000\ 0000_H$	32	$FFF2\ 1100_H$	3	32	√	√	√	√	√	√	√	√	√
ADCD1	Data register 02	ADCD1DR02	$0000\ 0000_H$	32	$FFF2\ 1104_H$	3	32	√	√	√	√	√	√	√	√	√
ADCD1	Data register 04	ADCD1DR04	$0000\ 0000_H$	32	$FFF2\ 1108_H$	3	32	√	√	√	√	√	√	√	√	√
ADCD1	Data register 06	ADCD1DR06	$0000\ 0000_H$	32	$FFF2\ 110C_H$	3	32	√	√	√	√	√	√	√	√	√
ADCD1	Data register 08	ADCD1DR08	$0000\ 0000_H$	32	$FFF2\ 1110_H$	3	32	√	√	√	√	√	√	√	√	√
ADCD1	Data register 10	ADCD1DR10	$0000\ 0000_H$	32	$FFF2\ 1114_H$	3	32	√	√	√	√	√	√	√	√	√
ADCD1	Data register 12	ADCD1DR12	$0000\ 0000_H$	32	$FFF2\ 1118_H$	3	32	√	√	√	√	√	√	√	√	√
ADCD1	Data register 14	ADCD1DR14	$0000\ 0000_H$	32	$FFF2\ 111C_H$	3	32	√	√	√	√	√	√	√	√	√

Table A.1 List of Registers (67/124)

Module	Register	Symbol	Value after Reset	Number of Bits	Address	Peripheral IP group	Access Size	Reset Source*1							Access Authority*1	
								POCRES	CVMRES	EXTRES	DBRES	ECMRES	BISTRES	SWRES	SV	UM
ADCD1	Data register 16	ADCD1DR16	$0000\ 0000_H$	32	$FFF2\ 1120_H$	3	32	√	√	√	√	√	√	√	√	√
ADCD1	Data register 18	ADCD1DR18	$0000\ 0000_H$	32	$FFF2\ 1124_H$	3	32	√	√	√	√	√	√	√	√	√
ADCD1	Data register 20	ADCD1DR20	$0000\ 0000_H$	32	$FFF2\ 1128_H$	3	32	√	√	√	√	√	√	√	√	√
ADCD1	Data register 22	ADCD1DR22	$0000\ 0000_H$	32	$FFF2\ 112C_H$	3	32	√	√	√	√	√	√	√	√	√
ADCD1	Data supplementary information register 00	ADCD1DIR00	$0000\ 0000_H$	32	$FFF2\ 1200_H$	3	32	√	√	√	√	√	√	√	√	√
ADCD1	Data supplementary information register 01	ADCD1DIR01	$0000\ 0000_H$	32	$FFF2\ 1204_H$	3	32	√	√	√	√	√	√	√	√	√
ADCD1	Data supplementary information register 02	ADCD1DIR02	$0000\ 0000_H$	32	$FFF2\ 1208_H$	3	32	√	√	√	√	√	√	√	√	√
ADCD1	Data supplementary information register 03	ADCD1DIR03	$0000\ 0000_H$	32	$FFF2\ 120C_H$	3	32	√	√	√	√	√	√	√	√	√
ADCD1	Data supplementary information register 04	ADCD1DIR04	$0000\ 0000_H$	32	$FFF2\ 1210_H$	3	32	√	√	√	√	√	√	√	√	√
ADCD1	Data supplementary information register 05	ADCD1DIR05	$0000\ 0000_H$	32	$FFF2\ 1214_H$	3	32	√	√	√	√	√	√	√	√	√
ADCD1	Data supplementary information register 06	ADCD1DIR06	$0000\ 0000_H$	32	$FFF2\ 1218_H$	3	32	√	√	√	√	√	√	√	√	√
ADCD1	Data supplementary information register 07	ADCD1DIR07	$0000\ 0000_H$	32	$FFF2\ 121C_H$	3	32	√	√	√	√	√	√	√	√	√
ADCD1	Data supplementary information register 08	ADCD1DIR08	$0000\ 0000_H$	32	$FFF2\ 1220_H$	3	32	√	√	√	√	√	√	√	√	√
ADCD1	Data supplementary information register 09	ADCD1DIR09	$0000\ 0000_H$	32	$FFF2\ 1224_H$	3	32	√	√	√	√	√	√	√	√	√
ADCD1	Data supplementary information register 10	ADCD1DIR10	$0000\ 0000_H$	32	$FFF2\ 1228_H$	3	32	√	√	√	√	√	√	√	√	√
ADCD1	Data supplementary information register 11	ADCD1DIR11	$0000\ 0000_H$	32	$FFF2\ 122C_H$	3	32	√	√	√	√	√	√	√	√	√
ADCD1	Data supplementary information register 12	ADCD1DIR12	$0000\ 0000_H$	32	$FFF2\ 1230_H$	3	32	√	√	√	√	√	√	√	√	√
ADCD1	Data supplementary information register 13	ADCD1DIR13	$0000\ 0000_H$	32	$FFF2\ 1234_H$	3	32	√	√	√	√	√	√	√	√	√
ADCD1	Data supplementary information register 14	ADCD1DIR14	$0000\ 0000_H$	32	$FFF2\ 1238_H$	3	32	√	√	√	√	√	√	√	√	√
ADCD1	Data supplementary information register 15	ADCD1DIR15	$0000\ 0000_H$	32	$FFF2\ 123C_H$	3	32	√	√	√	√	√	√	√	√	√
ADCD1	Data supplementary information register 16	ADCD1DIR16	$0000\ 0000_H$	32	$FFF2\ 1240_H$	3	32	√	√	√	√	√	√	√	√	√
ADCD1	Data supplementary information register 17	ADCD1DIR17	$0000\ 0000_H$	32	$FFF2\ 1244_H$	3	32	√	√	√	√	√	√	√	√	√
ADCD1	Data supplementary information register 18	ADCD1DIR18	$0000\ 0000_H$	32	$FFF2\ 1248_H$	3	32	√	√	√	√	√	√	√	√	√
ADCD1	Data supplementary information register 19	ADCD1DIR19	$0000\ 0000_H$	32	$FFF2\ 124C_H$	3	32	√	√	√	√	√	√	√	√	√
ADCD1	Data supplementary information register 20	ADCD1DIR20	$0000\ 0000_H$	32	$FFF2\ 1250_H$	3	32	√	√	√	√	√	√	√	√	√
ADCD1	Data supplementary information register 21	ADCD1DIR21	$0000\ 0000_H$	32	$FFF2\ 1254_H$	3	32	√	√	√	√	√	√	√	√	√
ADCD1	Data supplementary information register 22	ADCD1DIR22	$0000\ 0000_H$	32	$FFF2\ 1258_H$	3	32	√	√	√	√	√	√	√	√	√
ADCD1	Data supplementary information register 23	ADCD1DIR23	$0000\ 0000_H$	32	$FFF2\ 125C_H$	3	32	√	√	√	√	√	√	√	√	√
ADCD1	A/D conversion time control register	ADCD1SMPCR	0000_H	16	$FFF2\ 1340_H$	3	16	√	√	√	√	√	√	√	√	√
ADCD1	AD halt register	ADCD1ADHALTR	00_H	8	$FFF2\ 1380_H$	3	8	√	√	√	√	√	√	√	√	√
ADCD1	AD control register 1	ADCD1ADCR1	00_H	8	$FFF2\ 1384_H$	3	8	√	√	√	√	√	√	√	√	√
ADCD1	MPX current control register	ADCD1MPXCURCR	00_H	8	$FFF2\ 1388_H$	3	8	√	√	√	√	√	√	√	√	√
ADCD1	MPX current register	ADCD1MPXCURR	$0000\ 0000_H$	32	$FFF2\ 138C_H$	3	32	√	√	√	√	√	√	√	√	√
ADCD1	MPX optional wait register	ADCD1MPXOWR	00_H	8	$FFF2\ 1390_H$	3	8	√	√	√	√	√	√	√	√	√
ADCD1	AD control register 2	ADCD1ADCR2	00_H	8	$FFF2\ 1398_H$	3	8	√	√	√	√	√	√	√	√	√
ADCD1	A/D conversion monitor virtual channel pointer 0	ADCD1ADENDP0	00_H	8	$FFF2\ 13A0_H$	3	8	√	√	√	√	√	√	√	√	√
ADCD1	A/D conversion monitor virtual channel pointer 1	ADCD1ADENDP1	00_H	8	$FFF2\ 13A4_H$	3	8	√	√	√	√	√	√	√	√	√
ADCD1	A/D conversion monitor virtual channel pointer 2	ADCD1ADENDP2	00_H	8	$FFF2\ 13A8_H$	3	8	√	√	√	√	√	√	√	√	√
ADCD1	A/D conversion monitor virtual channel pointer 3	ADCD1ADENDP3	00_H	8	$FFF2\ 13AC_H$	3	8	√	√	√	√	√	√	√	√	√
ADCD1	A/D conversion monitor virtual channel pointer 4	ADCD1ADENDP4	00_H	8	$FFF2\ 13B0_H$	3	8	√	√	√	√	√	√	√	√	√
ADCD1	Safety control register	ADCD1SFTCR	00_H	8	$FFF2\ 13C0_H$	3	8	√	√	√	√	√	√	√	√	√
ADCD1	Pin level self-diagnostic control register	ADCD1TDCR	00_H	8	$FFF2\ 13C4_H$	3	8	√	√	√	√	√	√	√	√	√
ADCD1	Wiring-break detection control register	ADCD1ODCR	$0000\ 0000_H$	32	$FFF2\ 13C8_H$	3	32	√	√	√	√	√	√	√	√	√
ADCD1	Upper-limit/lower-limit table register 0	ADCD1ULLMTBR0	$7FFE\ 0000_H$	32	$FFF2\ 13CC_H$	3	32	√	√	√	√	√	√	√	√	√
ADCD1	Upper-limit/lower-limit table register 1	ADCD1ULLMTBR1	$7FFE\ 0000_H$	32	$FFF2\ 13D0_H$	3	32	√	√	√	√	√	√	√	√	√
ADCD1	Upper-limit/lower-limit table register 2	ADCD1ULLMTBR2	$7FFE\ 0000_H$	32	$FFF2\ 13D4_H$	3	32	√	√	√	√	√	√	√	√	√
ADCD1	Error clear register	ADCD1ECR	00_H	8	$FFF2\ 13D8_H$	3	8	√	√	√	√	√	√	√	√	√
ADCD1	Upper-limit/lower-limit error register	ADCD1ULER	00_H	8	$FFF2\ 13DC_H$	3	8	√	√	√	√	√	√	√	√	√
ADCD1	Overwrite error register	ADCD1OWER	00_H	8	$FFF2\ 13E0_H$	3	8	√	√	√	√	√	√	√	√	√
ADCD1	Parity error register	ADCD1PER	00_H	8	$FFF2\ 13E4_H$	3	8	√	√	√	√	√	√	√	√	√
ADCD1	ID error register	ADCD1IDER	00_H	8	$FFF2\ 13E8_H$	3	8	√	√	√	√	√	√	√	√	√
ADCD1	T&H sampling start control register	ADCD1THSMPSTCR	00_H	8	$FFF2\ 1400_H$	3	8	√	√	√	√	√	√	√	√	√
ADCD1	T&H stop control register	ADCD1THSTPCR	00_H	8	$FFF2\ 1404_H$	3	8	√	√	√	√	√	√	√	√	√

Table A.1 List of Registers (68/124)

Module	Register	Symbol	Value after Reset	Number of Bits	Address	Peripheral IP group	Access Size	Reset Source*1							Access Authority*1	
								POCRES	CVMRES	EXTRES	DBRES	ECMRES	BISTRES	SWRES	SV	UM
ADCD1	T&H control register	ADCD1THCR	00_H	8	$FFF2\ 1408_H$	3	8	√	√	√	√	√	√	√	√	√
ADCD1	T&H group A hold start control register	ADCD1THAHLDSTCR	00_H	8	$FFF2\ 1410_H$	3	8	√	√	√	√	√	√	√	√	√
ADCD1	T&H group B hold start control register	ADCD1THBHLDSTCR	00_H	8	$FFF2\ 1414_H$	3	8	√	√	√	√	√	√	√	√	√
ADCD1	T&H group A control register	ADCD1THACR	00_H	8	$FFF2\ 1420_H$	3	8	√	√	√	√	√	√	√	√	√
ADCD1	T&H group B control register	ADCD1THBCR	00_H	8	$FFF2\ 1424_H$	3	8	√	√	√	√	√	√	√	√	√
ADCD1	T&H enable register	ADCD1THER	00_H	8	$FFF2\ 1430_H$	3	8	√	√	√	√	√	√	√	√	√
ADCD1	T&H group select register	ADCD1THGSR	0000_H	16	$FFF2\ 1434_H$	3	16	√	√	√	√	√	√	√	√	√
ADCD1	Scan group 0 start control register 0	ADCD1SGSTCR0	00_H	8	$FFF2\ 1480_H$	3	8	√	√	√	√	√	√	√	√	√
ADCD1	Scan group 0 control register	ADCD1SGCR0	00_H	8	$FFF2\ 1490_H$	3	8	√	√	√	√	√	√	√	√	√
ADCD1	Scan group 0 start virtual channel pointer	ADCD1SGVCSP0	00_H	8	$FFF2\ 1494_H$	3	8	√	√	√	√	√	√	√	√	√
ADCD1	Scan group 0 end virtual channel pointer	ADCD1SGVCEP0	00_H	8	$FFF2\ 1498_H$	3	8	√	√	√	√	√	√	√	√	√
ADCD1	Scan group 0 multicycle register	ADCD1SGMCYCR0	00_H	8	$FFF2\ 149C_H$	3	8	√	√	√	√	√	√	√	√	√
ADCD1	Scan group 0 status register	ADCD1SGSR0	00_H	8	$FFF2\ 14A4_H$	3	8	√	√	√	√	√	√	√	√	√
ADCD1	Scan group 0 upper-limit/lower-limit table select register	ADCD1ULLMSR0	00_H	8	$FFF2\ 14B0_H$	3	8	√	√	√	√	√	√	√	√	√
ADCD1	Scan group 1 start control register	ADCD1SGSTCR1	00_H	8	$FFF2\ 1500_H$	3	8	√	√	√	√	√	√	√	√	√
ADCD1	Scan group 1 control register	ADCD1SGCR1	00_H	8	$FFF2\ 1510_H$	3	8	√	√	√	√	√	√	√	√	√
ADCD1	Scan group 1 start virtual channel pointer	ADCD1SGVCSP1	00_H	8	$FFF2\ 1514_H$	3	8	√	√	√	√	√	√	√	√	√
ADCD1	Scan group 1 end virtual channel pointer	ADCD1SGVCEP1	00_H	8	$FFF2\ 1518_H$	3	8	√	√	√	√	√	√	√	√	√
ADCD1	Scan group 1 multicycle register	ADCD1SGMCYCR1	00_H	8	$FFF2\ 151C_H$	3	8	√	√	√	√	√	√	√	√	√
ADCD1	Scan group 1 status register	ADCD1SGSR1	00_H	8	$FFF2\ 1524_H$	3	8	√	√	√	√	√	√	√	√	√
ADCD1	Scan group 1 upper-limit/lower-limit table select register	ADCD1ULLMSR1	00_H	8	$FFF2\ 1530_H$	3	8	√	√	√	√	√	√	√	√	√
ADCD1	Scan group 2 start control register	ADCD1SGSTCR2	00_H	8	$FFF2\ 1580_H$	3	8	√	√	√	√	√	√	√	√	√
ADCD1	Scan group 2 control register	ADCD1SGCR2	00_H	8	$FFF2\ 1590_H$	3	8	√	√	√	√	√	√	√	√	√
ADCD1	Scan group 2 start virtual channel pointer	ADCD1SGVCSP2	00_H	8	$FFF2\ 1594_H$	3	8	√	√	√	√	√	√	√	√	√
ADCD1	Scan group 2 end virtual channel pointer	ADCD1SGVCEP2	00_H	8	$FFF2\ 1598_H$	3	8	√	√	√	√	√	√	√	√	√
ADCD1	Scan group 2 multicycle register	ADCD1SGMCYCR2	00_H	8	$FFF2\ 159C_H$	3	8	√	√	√	√	√	√	√	√	√
ADCD1	Scan group 2 status register	ADCD1SGSR2	00_H	8	$FFF2\ 15A4_H$	3	8	√	√	√	√	√	√	√	√	√
ADCD1	Scan group 2 upper-limit/lower-limit table select register	ADCD1ULLMSR2	00_H	8	$FFF2\ 15B0_H$	3	8	√	√	√	√	√	√	√	√	√
ADCD1	Scan group 3 start control register	ADCD1SGSTCR3	00_H	8	$FFF2\ 1600_H$	3	8	√	√	√	√	√	√	√	√	√
ADCD1	AD timer 3 start control register	ADCD1ADTSTCR3	00_H	8	$FFF2\ 1608_H$	3	8	√	√	√	√	√	√	√	√	√
ADCD1	AD timer 3 end control register	ADCD1ADTENDCR3	00_H	8	$FFF2\ 160C_H$	3	8	√	√	√	√	√	√	√	√	√
ADCD1	Scan group 3 control register	ADCD1SGCR3	00_H	8	$FFF2\ 1610_H$	3	8	√	√	√	√	√	√	√	√	√
ADCD1	Scan group 3 start virtual channel pointer	ADCD1SGVCSP3	00_H	8	$FFF2\ 1614_H$	3	8	√	√	√	√	√	√	√	√	√
ADCD1	Scan group 3 end virtual channel pointer	ADCD1SGVCEP3	00_H	8	$FFF2\ 1618_H$	3	8	√	√	√	√	√	√	√	√	√
ADCD1	Scan group 3 multicycle register	ADCD1SGMCYCR3	00_H	8	$FFF2\ 161C_H$	3	8	√	√	√	√	√	√	√	√	√
ADCD1	Scan group 3 status register	ADCD1SGSR3	00_H	8	$FFF2\ 1624_H$	3	8	√	√	√	√	√	√	√	√	√
ADCD1	AD timer initial phase register 3	ADCD1ADTIPR3	$0000\ 0000_H$	32	$FFF2\ 1628_H$	3	32	√	√	√	√	√	√	√	√	√
ADCD1	AD timer period register 3	ADCD1ADTPRR3	$001F\ FFFF_H$	32	$FFF2\ 162C_H$	3	32	√	√	√	√	√	√	√	√	√
ADCD1	Scan group 3 upper-limit/lower-limit table select register	ADCD1ULLMSR3	00_H	8	$FFF2\ 1630_H$	3	8	√	√	√	√	√	√	√	√	√
ADCD1	Scan group 4 start control register	ADCD1SGSTCR4	00_H	8	$FFF2\ 1680_H$	3	8	√	√	√	√	√	√	√	√	√
ADCD1	AD timer 4 start control register	ADCD1ADTSTCR4	00_H	8	$FFF2\ 1688_H$	3	8	√	√	√	√	√	√	√	√	√
ADCD1	AD timer 4 end control register	ADCD1ADTENDCR4	00_H	8	$FFF2\ 168C_H$	3	8	√	√	√	√	√	√	√	√	√
ADCD1	Scan group 4 control register	ADCD1SGCR4	00_H	8	$FFF2\ 1690_H$	3	8	√	√	√	√	√	√	√	√	√
ADCD1	Scan group 4 start virtual channel pointer	ADCD1SGVCSP4	00_H	8	$FFF2\ 1694_H$	3	8	√	√	√	√	√	√	√	√	√
ADCD1	Scan group 4 end virtual channel pointer	ADCD1SGVCEP4	00_H	8	$FFF2\ 1698_H$	3	8	√	√	√	√	√	√	√	√	√
ADCD1	Scan group 4 multicycle register	ADCD1SGMCYCR4	00_H	8	$FFF2\ 169C_H$	3	8	√	√	√	√	√	√	√	√	√
ADCD1	Scan group 4 status register	ADCD1SGSR4	00_H	8	$FFF2\ 16A4_H$	3	8	√	√	√	√	√	√	√	√	√
ADCD1	AD timer initial phase register 4	ADCD1ADTIPR4	$0000\ 0000_H$	32	$FFF2\ 16A8_H$	3	32	√	√	√	√	√	√	√	√	√
ADCD1	AD timer period register 4	ADCD1ADTPRR4	$001F\ FFFF_H$	32	$FFF2\ 16AC_H$	3	32	√	√	√	√	√	√	√	√	√
ADCD1	Scan group 4 upper-limit/lower-limit table select register	ADCD1ULLMSR4	00_H	8	$FFF2\ 16B0_H$	3	8	√	√	√	√	√	√	√	√	√
ADCD0	Wiring-break detection pin setting register 0	ADOPDIG0	$0000\ 0000_H$	32	$FFF2\ 3000_H$	3	32	√	√	√	√	√	√	√	√	√
ADCD1	Wiring-break detection pin setting register 1	ADOPDIG1	$0000\ 0000_H$	32	$FFF2\ 3040_H$	3	32	√	√	√	√	√	√	√	√	√
PIC2B	A/D converter synchronized start trigger register	ADSYNCTRG	00_H	8	$FFF2\ 3100_H$	3	8	√	√	√	√	√	√	√	√	√

Table A.1 List of Registers (69/124)

Module	Register	Symbol	Value after Reset	Number of Bits	Address	Peripheral IP group	Access Size	Reset Source*1							Access Authority*1	
								POCRES	CVMRES	EXTRES	DBRES	ECMRES	BISTRES	SWRES	SV	UM
TSN0	Temperature sensor control register	TSN0CR	$0000\ 0000_H$	32	$FFF2\ 8000_H$	3	32	√	√	√	√	√	√	√	√	√
TSN0	Temperature sensor status register	TSN0STAT	$0000\ 0000_H$	32	$FFF2\ 8004_H$	3	32	√	√	√	√	√	√	√	√	√
TSN0	Temperature sensor diagnosis control register	TSN0DIAG	$0000\ 0000_H$	32	$FFF2\ 8008_H$	3	32	√	√	√	√	√	√	√	√	√
FLASH	FHVE3 control register	FHVE3	$0000\ 0000_H$	32	$FFF8\ 2410_H$	5	32	√	√	√	√	√	√	√	√	√
SYS	Reset source determination register	RESF	$0000\ 000X_H$	32	$FFF8\ 2800_H$	5	32	√	√	—	√	—	—	—	√	√
SYS	Reset source clear register	RESFC	$0000\ 0000_H$	32	$FFF8\ 2808_H$	5	32	√	√	—	√	—	—	—	√	√
SYS	CVM factor register	CVMF	00_H	8	$FFF8\ 2820_H$	5	8	√	—	—	√	—	—	—	√	√
SYS	CVM detection enable register	CVMDE	03_H	8	$FFF8\ 2824_H$	5	8	√	—	—	√	—	—	—	√	√
SYS	CVM detection output mask register	CVMDMASK	00_H	8	$FFF8\ 282C_H$	5	8	√	√	√	√	√	√	√	√	√
SYS	CVM diagnostic function control register	CVMDIAG	00_H	8	$FFF8\ 2830_H$	5	8	√	√	√	√	√	√	√	√	√
SYS	CVM monitor register	CVMMON	Undefined	8	$FFF8\ 2834_H$	5	8	—	—	—	—	—	—	—	√	√
SYS	CVM factor clear register	CVMFC	00_H	8	$FFF8\ 2838_H$	5	8	√	√	√	√	√	√	√	√	√
SYS	CVM detection enable setting register	CVMDEW	00_H	8	$FFF8\ 283C_H$	5	8	√	√	√	√	√	√	√	√	√
SYS	CVM reset enable register*1	CVMREN	$0000\ 0000_H$	32	$FFF8\ 2840_H$	5	32	√	—	—	√	—	—	—	√	√
SYS	LVI control register*2	LVICNT	$0000\ 0000_H$	32	$FFF8\ 2C00_H$	5	32	√	√	√	√	√	√	√	√	√
SYS	Write-Protection Command Register	PROTCMDCVM	$0000\ 0000_H$	32	$FFF8\ 3010_H$	5	32	√	√	√	√	√	√	√	√	√
SYS	Write Sequence Status Register	PROTSCVM	$0000\ 0000_H$	32	$FFF8\ 3014_H$	5	32	√	√	√	√	√	√	√	√	√
CLMAC	CLMA self-test register	CLMATEST	$0000\ 0000_H$	32	$FFF8\ 8204_H$	5	32	√	√	√	√	√	√	√	√	√
CLMAC	CLMA self-test status register	CLMATESTS	$0000\ 0000_H$	32	$FFF8\ 8208_H$	5	32	√	√	√	√	√	√	√	√	√
CLMA0	CLMA0 control register 0	CLMA0CTL0	00_H	8	$FFF8\ 8400_H$	5	8	√	√	√	√	√	√	√	√	√
CLMA0	CLMA0 compare register L	CLMA0CMPL	0001_H	16	$FFF8\ 8408_H$	5	16	√	√	√	√	√	√	√	√	√
CLMA0	CLMA0 compare register H	CLMA0CMPH	$03FF_H$	16	$FFF8\ 840C_H$	5	16	√	√	√	√	√	√	√	√	√
CLMA0	CLMA0 Write-Protection Command Register	CLMA0PCMD	00_H	8	$FFF8\ 8410_H$	5	8	√	√	√	√	√	√	√	√	√
CLMA0	CLMA0 Write Sequence Status Register	CLMA0PS	00_H	8	$FFF8\ 8414_H$	5	8	√	√	√	√	√	√	√	√	√
CLMA1	CLMA1 control register 0	CLMA1CTL0	00_H	8	$FFF8\ 8420_H$	5	8	√	√	√	√	√	√	√	√	√
CLMA1	CLMA1 compare register L	CLMA1CMPL	0001_H	16	$FFF8\ 8428_H$	5	16	√	√	√	√	√	√	√	√	√
CLMA1	CLMA1 compare register H	CLMA1CMPH	$03FF_H$	16	$FFF8\ 842C_H$	5	16	√	√	√	√	√	√	√	√	√
CLMA1	CLMA1 Write-Protection Command Register	CLMA1PCMD	00_H	8	$FFF8\ 8430_H$	5	8	√	√	√	√	√	√	√	√	√
CLMA1	CLMA1 Write Sequence Status Register	CLMA1PS	00_H	8	$FFF8\ 8434_H$	5	8	√	√	√	√	√	√	√	√	√
CLMA2	CLMA2 control register 0	CLMA2CTL0	00_H	8	$FFF8\ 8440_H$	5	8	√	√	√	√	√	√	√	√	√
CLMA2	CLMA2 compare register L	CLMA2CMPL	0001_H	16	$FFF8\ 8448_H$	5	16	√	√	√	√	√	√	√	√	√
CLMA2	CLMA2 compare register H	CLMA2CMPH	$03FF_H$	16	$FFF8\ 844C_H$	5	16	√	√	√	√	√	√	√	√	√
CLMA2	CLMA2 Write-Protection Command Register	CLMA2PCMD	00_H	8	$FFF8\ 8450_H$	5	8	√	√	√	√	√	√	√	√	√
CLMA2	CLMA2 Write Sequence Status Register	CLMA2PS	00_H	8	$FFF8\ 8454_H$	5	8	√	√	√	√	√	√	√	√	√
CLMA3	CLMA3 control register 0	CLMA3CTL0	00_H	8	$FFF8\ 8460_H$	5	8	√	√	√	√	√	√	√	√	√
CLMA3	CLMA3 compare register L	CLMA3CMPL	0001_H	16	$FFF8\ 8468_H$	5	16	√	√	√	√	√	√	√	√	√
CLMA3	CLMA3 compare register H	CLMA3CMPH	$03FF_H$	16	$FFF8\ 846C_H$	5	16	√	√	√	√	√	√	√	√	√
CLMA3	CLMA3 Write-Protection Command Register	CLMA3PCMD	00_H	8	$FFF8\ 8470_H$	5	8	√	√	√	√	√	√	√	√	√
CLMA3	CLMA3 Write Sequence Status Register	CLMA3PS	00_H	8	$FFF8\ 8474_H$	5	8	√	√	√	√	√	√	√	√	√
SYS	Clock selection control register 0	CKSC0CTL	$0000\ 0000_H$	32	$FFF8\ 9080_H$	5	32	√	√	√	√	√	√	√	√	√
SYS	Clock selection status register 0	CSC0STAT	$0000\ 0000_H$	32	$FFF8\ 9084_H$	5	32	√	√	√	√	√	√	√	√	√
SYS	Clock selection control register 1	CKSC1CTL	$0000\ 0000_H$	32	$FFF8\ 90C0_H$	5	32	√	√	√	√	√	√	√	√	√
SYS	Clock selection status register 1	CSC1STAT	$0000\ 0000_H$	32	$FFF8\ 90C4_H$	5	32	√	√	√	√	√	√	√	√	√
SYS	Digital noise elimination sampling clock source select register	DNFCKS100C	$0000\ 0002_H$	32	$FFF8\ 9100_H$	5	32	√	√	√	√	√	√	√	√	√
SYS	Digital noise elimination sampling clock source status register	DNFCSC100STAT	$0000\ 0003_H$	32	$FFF8\ 9104_H$	5	32	√	√	√	√	√	√	√	√	√
SYS	Digital noise elimination sampling clock source select register	DNFCKS101C	$0000\ 0002_H$	32	$FFF8\ 9108_H$	5	32	√	√	√	√	√	√	√	√	√
SYS	Digital noise elimination sampling clock source status register	DNFCSC101STAT	$0000\ 0003_H$	32	$FFF8\ 910C_H$	5	32	√	√	√	√	√	√	√	√	√
SYS	Digital noise elimination sampling clock source select register	DNFCKS106C	$0000\ 0002_H$	32	$FFF8\ 9110_H$	5	32	√	√	√	√	√	√	√	√	√
SYS	Digital noise elimination sampling clock source status register	DNFCSC106STAT	$0000\ 0003_H$	32	$FFF8\ 9114_H$	5	32	√	√	√	√	√	√	√	√	√
SYS	Digital noise elimination sampling clock source select register	DNFCKS107C	$0000\ 0002_H$	32	$FFF8\ 9118_H$	5	32	√	√	√	√	√	√	√	√	√
SYS	Digital noise elimination sampling clock source status register	DNFCSC107STAT	$0000\ 0003_H$	32	$FFF8\ 911C_H$	5	32	√	√	√	√	√	√	√	√	√
SYS	Digital noise elimination sampling clock source select register	DNFCKS108C	$0000\ 0002_H$	32	$FFF8\ 9120_H$	5	32	√	√	√	√	√	√	√	√	√
SYS	Digital noise elimination sampling clock source status register	DNFCSC108STAT	$0000\ 0003_H$	32	$FFF8\ 9124_H$	5	32	√	√	√	√	√	√	√	√	√

Table A.1 List of Registers (70/124)

Module	Register	Symbol	Value after Reset	Number of Bits	Address	Peripheral IP group	Access Size	Reset Source*1							Access Authority*1	
								POCRES	CVMRES	EXTRES	DBRES	ECMRES	BISTRES	SWRES	SV	UM
SYS	Digital noise elimination sampling clock source select register	DNFCKS109C	$0000\ 0002_H$	32	$FFF8\ 9128_H$	5	32	√	√	√	√	√	√	√	√	√
SYS	Digital noise elimination sampling clock source status register	DNFCSC109STAT	$0000\ 0003_H$	32	$FFF8\ 912C_H$	5	32	√	√	√	√	√	√	√	√	√
SYS	Digital noise elimination sampling clock source select register	DNFCKS110C	$0000\ 0002_H$	32	$FFF8\ 9130_H$	5	32	√	√	√	√	√	√	√	√	√
SYS	Digital noise elimination sampling clock source status register	DNFCSC110STAT	$0000\ 0003_H$	32	$FFF8\ 9134_H$	5	32	√	√	√	√	√	√	√	√	√
SYS	Digital noise elimination sampling clock source select register	DNFCKS112C	$0000\ 0002_H$	32	$FFF8\ 9138_H$	5	32	√	√	√	√	√	√	√	√	√
SYS	Digital noise elimination sampling clock source status register	DNFCSC112STAT	$0000\ 0003_H$	32	$FFF8\ 913C_H$	5	32	√	√	√	√	√	√	√	√	√
SYS	Digital noise elimination sampling clock source select register	DNFCKS113C	$0000\ 0002_H$	32	$FFF8\ 9140_H$	5	32	√	√	√	√	√	√	√	√	√
SYS	Digital noise elimination sampling clock source status register	DNFCSC113STAT	$0000\ 0003_H$	32	$FFF8\ 9144_H$	5	32	√	√	√	√	√	√	√	√	√
SYS	Digital noise elimination sampling clock source select register	DNFCKS114C	$0000\ 0002_H$	32	$FFF8\ 9148_H$	5	32	√	√	√	√	√	√	√	√	√
SYS	Digital noise elimination sampling clock source status register	DNFCSC114STAT	$0000\ 0003_H$	32	$FFF8\ 914C_H$	5	32	√	√	√	√	√	√	√	√	√
SYS	Digital noise elimination sampling clock source select register	DNFCKS104C	$0000\ 0002_H$	32	$FFF8\ 9150_H$	5	32	√	√	√	√	√	√	√	√	√
SYS	Digital noise elimination sampling clock source status register	DNFCSC104STAT	$0000\ 0003_H$	32	$FFF8\ 9154_H$	5	32	√	√	√	√	√	√	√	√	√
SYS	Digital noise elimination sampling clock source select register	DNFCKS105C	$0000\ 0002_H$	32	$FFF8\ 9158_H$	5	32	√	√	√	√	√	√	√	√	√
SYS	Digital noise elimination sampling clock source status register	DNFCSC105STAT	$0000\ 0003_H$	32	$FFF8\ 915C_H$	5	32	√	√	√	√	√	√	√	√	√
SYS	Digital noise elimination sampling clock source select register	DNFCKS102C	$0000\ 0002_H$	32	$FFF8\ 9160_H$	5	32	√	√	√	√	√	√	√	√	√
SYS	Digital noise elimination sampling clock source status register	DNFCSC102STAT	$0000\ 0003_H$	32	$FFF8\ 9164_H$	5	32	√	√	√	√	√	√	√	√	√
SYS	Clock division control register 0	CLKD0DIV	$0000\ 0000_H$	32	$FFF8\ 9180_H$	5	32	√	√	√	√	√	√	√	√	√
SYS	Clock division status register 0	CLKD0STAT	$0000\ 0001_H$	32	$FFF8\ 9184_H$	5	32	√	√	√	√	√	√	√	√	√
SYS	Clock division control register 1	CLKD1DIV	$0000\ 0000_H$	32	$FFF8\ 9188_H$	5	32	√	√	√	√	√	√	√	√	√
SYS	Clock division status register 1	CLKD1STAT	$0000\ 0001_H$	32	$FFF8\ 918C_H$	5	32	√	√	√	√	√	√	√	√	√
SYS	A/D clock selection control register 0	ADCKSC0CTL	$0000\ 0002_H$	32	$FFF8\ 9200_H$	5	32	√	√	√	√	√	√	√	√	√
SYS	A/D clock selection status register 0	ADCSC0STAT	$0000\ 0003_H$	32	$FFF8\ 9204_H$	5	32	√	√	√	√	√	√	√	√	√
FLASH	FHVE15 control register	FHVE15	$0000\ 0000_H$	32	$FFF8\ A430_H$	5	32	√	√	√	√	√	√	√	√	√
SYS	Field BIST control register	BSEQ0CTL	$0000\ 0001_H$	32	$FFF8\ A440_H$	5	32	√	√	—	√	—	—	—	√	√
SYS	Power-on clear flag register	POF	$0000\ 000X_H$	32	$FFF8\ AC10_H$	5	32	√	—	—	—	—	—	—	√	√
SYS	Power-on clear flag clear register	POFC	$0000\ 0000_H$	32	$FFF8\ AC14_H$	5	32	√	√	√	√	√	√	√	√	√
SYS	Software Reset Request Register	SWRESA	$0000\ 0000_H$	32	$FFF8\ AC18_H$	5	32	√	√	√	√	√	√	√	√	√
SYS	Write Protection Command Register	PROT1PHCMD	$0000\ 0000_H$	32	$FFF8\ B000_H$	5	32	√	√	√	√	√	√	√	√	√
SYS	Write Sequence Status Register	PROT1PS	$0000\ 0000_H$	32	$FFF8\ B004_H$	5	32	√	√	√	√	√	√	√	√	√
PBG	PBG5A protection register 0	FSGD5ADPROT0	$07FF\ FFFF_H$	32	$FFF9\ 0000_H$	5	8, 16, 32	√	√	√	√	√	√	√	√	√
PBG	PBG5A error control register	ERRSLV5ACTL	$0000\ 0000_H$	32	$FFF9\ 0040_H$	5	8, 16, 32	√	√	√	√	√	√	√	√	√
PBG	PBG5A error status register	ERRSLV5ASTAT	$0000\ 0000_H$	32	$FFF9\ 0044_H$	5	8, 16, 32	√	√	√	√	√	√	√	√	√
PBG	PBG5A error address register	ERRSLV5AADDR	$0000\ 0000_H$	32	$FFF9\ 0048_H$	5	32	√	√	√	√	√	√	√	√	√
PBG	PBG5A error type register	ERRSLV5ATYPE	$0000\ 0000_H$	32	$FFF9\ 004C_H$	5	16, 32	√	√	√	√	√	√	√	√	√
PBG	PBG2A protection register 0	FSGD2ADPROT0	$07FF\ FFFF_H$	32	$FFF9\ 4000_H$	2	8, 16, 32	√	√	√	√	√	√	√	√	√
PBG	PBG2A protection register 1	FSGD2ADPROT1	$07FF\ FFFF_H$	32	$FFF9\ 4004_H$	2	8, 16, 32	√	√	√	√	√	√	√	√	√
PBG	PBG2A protection register 2	FSGD2ADPROT2	$07FF\ FFFF_H$	32	$FFF9\ 4008_H$	2	8, 16, 32	√	√	√	√	√	√	√	√	√
PBG	PBG2A protection register 3	FSGD2ADPROT3	$07FF\ FFFF_H$	32	$FFF9\ 400C_H$	2	8, 16, 32	√	√	√	√	√	√	√	√	√
PBG	PBG2A protection register 4	FSGD2ADPROT4	$07FF\ FFFF_H$	32	$FFF9\ 4010_H$	2	8, 16, 32	√	√	√	√	√	√	√	√	√
PBG	PBG2A protection register 5	FSGD2ADPROT5	$07FF\ FFFF_H$	32	$FFF9\ 4014_H$	2	8, 16, 32	√	√	√	√	√	√	√	√	√
PBG	PBG2A protection register 6	FSGD2ADPROT6	$07FF\ FFFF_H$	32	$FFF9\ 4018_H$	2	8, 16, 32	√	√	√	√	√	√	√	√	√
PBG	PBG2A protection register 7	FSGD2ADPROT7	$07FF\ FFFF_H$	32	$FFF9\ 401C_H$	2	8, 16, 32	√	√	√	√	√	√	√	√	√
PBG	PBG2A protection register 8	FSGD2ADPROT8	$07FF\ FFFF_H$	32	$FFF9\ 4020_H$	2	8, 16, 32	√	√	√	√	√	√	√	√	√
PBG	PBG2A protection register 9	FSGD2ADPROT9	$07FF\ FFFF_H$	32	$FFF9\ 4024_H$	2	8, 16, 32	√	√	√	√	√	√	√	√	√
PBG	PBG2A protection register 10	FSGD2ADPROT10	$07FF\ FFFF_H$	32	$FFF9\ 4028_H$	2	8, 16, 32	√	√	√	√	√	√	√	√	√
PBG	PBG2A protection register 11	FSGD2ADPROT11	$07FF\ FFFF_H$	32	$FFF9\ 402C_H$	2	8, 16, 32	√	√	√	√	√	√	√	√	√
PBG	PBG2A protection register 12	FSGD2ADPROT12	$07FF\ FFFF_H$	32	$FFF9\ 4030_H$	2	8, 16, 32	√	√	√	√	√	√	√	√	√
PBG	PBG2A protection register 13	FSGD2ADPROT13	$07FF\ FFFF_H$	32	$FFF9\ 4034_H$	2	8, 16, 32	√	√	√	√	√	√	√	√	√
PBG	PBG2A protection register 14	FSGD2ADPROT14	$07FF\ FFFF_H$	32	$FFF9\ 4038_H$	2	8, 16, 32	√	√	√	√	√	√	√	√	√
PBG	PBG2A protection register 15	FSGD2ADPROT15	$07FF\ FFFF_H$	32	$FFF9\ 403C_H$	2	8, 16, 32	√	√	√	√	√	√	√	√	√
PBG	PBG2A error control register	ERRSLV2ACTL	$0000\ 0000_H$	32	$FFF9\ 4040_H$	2	8, 16, 32	√	√	√	√	√	√	√	√	√
PBG	PBG2A error status register	ERRSLV2ASTAT	$0000\ 0000_H$	32	$FFF9\ 4044_H$	2	8, 16, 32	√	√	√	√	√	√	√	√	√
PBG	PBG2A error address register	ERRSLV2AADDR	$0000\ 0000_H$	32	$FFF9\ 4048_H$	2	32	√	√	√	√	√	√	√	√	√

Table A.1 List of Registers (71/124)

Module	Register	Symbol	Value after Reset	Number of Bits	Address	Peripheral IP group	Access Size	Reset Source*1							Access Authority*1	
								POCRES	CVMRES	EXTRES	DBRES	ECMRES	BISTRES	SWRES	SV	UM
PBG	PBG2A error type register	ERRSLV2ATYPE	0000 0000$_H$	32	FFF9 404C$_H$	2	16, 32	√	√	√	√	√	√	√	√	√
APDP	P-Bus data parity status register OSTM30	APDPERRST_OSTM30	0000 0000$_H$	32	FFF9 6000$_H$	2	8, 16, 32	√	√	√	√	√	√	√	√	√
APDP	P-Bus data parity status clear register OSTM30	APDPERRSTC_OSTM30	0000 0000$_H$	32	FFF9 6004$_H$	2	8, 16, 32	√	√	√	√	√	√	√	√	√
APDP	P-Bus data parity test mode control register OSTM30	APDPTMC_OSTM30	0000 0000$_H$	32	FFF9 6008$_H$	2	16, 32	√	√	√	√	√	√	√	√	√
APDP	P-Bus data parity error address register OSTM30	APDPERRADR_OSTM30	0000 0000$_H$	32	FFF9 600C$_H$	2	32	√	√	√	√	√	√	√	√	√
APDP	P-Bus data parity status register OSTM40	APDPERRST_OSTM40	0000 0000$_H$	32	FFF9 6010$_H$	2	8, 16, 32	√	√	√	√	√	√	√	√	√
APDP	P-Bus data parity status clear register OSTM40	APDPERRSTC_OSTM40	0000 0000$_H$	32	FFF9 6014$_H$	2	8, 16, 32	√	√	√	√	√	√	√	√	√
APDP	P-Bus data parity test mode control register OSTM40	APDPTMC_OSTM40	0000 0000$_H$	32	FFF9 6018$_H$	2	16, 32	√	√	√	√	√	√	√	√	√
APDP	P-Bus data parity error address register OSTM40	APDPERRADR_OSTM40	0000 0000$_H$	32	FFF9 601C$_H$	2	32	√	√	√	√	√	√	√	√	√
APDP	P-Bus data parity status register OSTM50	APDPERRST_OSTM50	0000 0000$_H$	32	FFF9 6020$_H$	2	8, 16, 32	√	√	√	√	√	√	√	√	√
APDP	P-Bus data parity status clear register OSTM50	APDPERRSTC_OSTM50	0000 0000$_H$	32	FFF9 6024$_H$	2	8, 16, 32	√	√	√	√	√	√	√	√	√
APDP	P-Bus data parity test mode control register OSTM50	APDPTMC_OSTM50	0000 0000$_H$	32	FFF9 6028$_H$	2	16, 32	√	√	√	√	√	√	√	√	√
APDP	P-Bus data parity error address register OSTM50	APDPERRADR_OSTM50	0000 0000$_H$	32	FFF9 602C$_H$	2	32	√	√	√	√	√	√	√	√	√
APDP	P-Bus data parity status register OSTM60	APDPERRST_OSTM60	0000 0000$_H$	32	FFF9 6030$_H$	2	8, 16, 32	√	√	√	√	√	√	√	√	√
APDP	P-Bus data parity status clear register OSTM60	APDPERRSTC_OSTM60	0000 0000$_H$	32	FFF9 6034$_H$	2	8, 16, 32	√	√	√	√	√	√	√	√	√
APDP	P-Bus data parity test mode control register OSTM60	APDPTMC_OSTM60	0000 0000$_H$	32	FFF9 6038$_H$	2	16, 32	√	√	√	√	√	√	√	√	√
APDP	P-Bus data parity error address register OSTM60	APDPERRADR_OSTM60	0000 0000$_H$	32	FFF9 603C$_H$	2	32	√	√	√	√	√	√	√	√	√
APDP	P-Bus data parity status register OSTM70	APDPERRST_OSTM70	0000 0000$_H$	32	FFF9 6040$_H$	2	8, 16, 32	√	√	√	√	√	√	√	√	√
APDP	P-Bus data parity status clear register OSTM70	APDPERRSTC_OSTM70	0000 0000$_H$	32	FFF9 6044$_H$	2	8, 16, 32	√	√	√	√	√	√	√	√	√
APDP	P-Bus data parity test mode control register OSTM70	APDPTMC_OSTM70	0000 0000$_H$	32	FFF9 6048$_H$	2	16, 32	√	√	√	√	√	√	√	√	√
APDP	P-Bus data parity error address register OSTM70	APDPERRADR_OSTM70	0000 0000$_H$	32	FFF9 604C$_H$	2	32	√	√	√	√	√	√	√	√	√
APDP	P-Bus data parity status register CSIH00	APDPERRST_CSIH00	0000 0000$_H$	32	FFF9 6050$_H$	2	8, 16, 32	√	√	√	√	√	√	√	√	√
APDP	P-Bus data parity status clear register CSIH00	APDPERRSTC_CSIH00	0000 0000$_H$	32	FFF9 6054$_H$	2	8, 16, 32	√	√	√	√	√	√	√	√	√
APDP	P-Bus data parity test mode control register CSIH00	APDPTMC_CSIH00	0000 0000$_H$	32	FFF9 6058$_H$	2	16, 32	√	√	√	√	√	√	√	√	√
APDP	P-Bus data parity error address register CSIH00	APDPERRADR_CSIH00	0000 0000$_H$	32	FFF9 605C$_H$	2	32	√	√	√	√	√	√	√	√	√
APDP	P-Bus data parity status register CSIH10	APDPERRST_CSIH10	0000 0000$_H$	32	FFF9 6060$_H$	2	8, 16, 32	√	√	√	√	√	√	√	√	√
APDP	P-Bus data parity status clear register CSIH10	APDPERRSTC_CSIH10	0000 0000$_H$	32	FFF9 6064$_H$	2	8, 16, 32	√	√	√	√	√	√	√	√	√
APDP	P-Bus data parity test mode control register CSIH10	APDPTMC_CSIH10	0000 0000$_H$	32	FFF9 6068$_H$	2	16, 32	√	√	√	√	√	√	√	√	√
APDP	P-Bus data parity error address register CSIH10	APDPERRADR_CSIH10	0000 0000$_H$	32	FFF9 606C$_H$	2	32	√	√	√	√	√	√	√	√	√
APDP	P-Bus data parity status register CSIH20	APDPERRST_CSIH20	0000 0000$_H$	32	FFF9 6070$_H$	2	8, 16, 32	√	√	√	√	√	√	√	√	√
APDP	P-Bus data parity status clear register CSIH20	APDPERRSTC_CSIH20	0000 0000$_H$	32	FFF9 6074$_H$	2	8, 16, 32	√	√	√	√	√	√	√	√	√
APDP	P-Bus data parity test mode control register CSIH20	APDPTMC_CSIH20	0000 0000$_H$	32	FFF9 6078$_H$	2	16, 32	√	√	√	√	√	√	√	√	√
APDP	P-Bus data parity error address register CSIH20	APDPERRADR_CSIH20	0000 0000$_H$	32	FFF9 607C$_H$	2	32	√	√	√	√	√	√	√	√	√
APDP	P-Bus data parity status register CSIH30	APDPERRST_CSIH30	0000 0000$_H$	32	FFF9 6080$_H$	2	8, 16, 32	√	√	√	√	√	√	√	√	√
APDP	P-Bus data parity status clear register CSIH30	APDPERRSTC_CSIH30	0000 0000$_H$	32	FFF9 6084$_H$	2	8, 16, 32	√	√	√	√	√	√	√	√	√
APDP	P-Bus data parity test mode control register CSIH30	APDPTMC_CSIH30	0000 0000$_H$	32	FFF9 6088$_H$	2	16, 32	√	√	√	√	√	√	√	√	√
APDP	P-Bus data parity error address register CSIH30	APDPERRADR_CSIH30	0000 0000$_H$	32	FFF9 608C$_H$	2	32	√	√	√	√	√	√	√	√	√
APDP	P-Bus data parity status register CSIG0	APDPERRST_CSIG0	0000 0000$_H$	32	FFF9 6090$_H$	2	8, 16, 32	√	√	√	√	√	√	√	√	√
APDP	P-Bus data parity status clear register CSIG0	APDPERRSTC_CSIG0	0000 0000$_H$	32	FFF9 6094$_H$	2	8, 16, 32	√	√	√	√	√	√	√	√	√
APDP	P-Bus data parity test mode control register CSIG0	APDPTMC_CSIG0	0000 0000$_H$	32	FFF9 6098$_H$	2	16, 32	√	√	√	√	√	√	√	√	√
APDP	P-Bus data parity error address register CSIG0	APDPERRADR_CSIG0	0000 0000$_H$	32	FFF9 609C$_H$	2	32	√	√	√	√	√	√	√	√	√
APDP	P-Bus data parity status register CHBB0	APDPERRST_CHBB0	0000 0000$_H$	32	FFF9 60A0$_H$	2	8, 16, 32	√	√	√	√	√	√	√	√	√
APDP	P-Bus data parity status clear register CHBB0	APDPERRSTC_CHBB0	0000 0000$_H$	32	FFF9 60A4$_H$	2	8, 16, 32	√	√	√	√	√	√	√	√	√
APDP	P-Bus data parity test mode control register CHBB0	APDPTMC_CHBB0	0000 0000$_H$	32	FFF9 60A8$_H$	2	16, 32	√	√	√	√	√	√	√	√	√
APDP	P-Bus data parity error address register CHBB0	APDPERRADR_CHBB0	0000 0000$_H$	32	FFF9 60AC$_H$	2	32	√	√	√	√	√	√	√	√	√
APDP	P-Bus data parity status register CHBA0	APDPERRST_CHBA0	0000 0000$_H$	32	FFF9 60B0$_H$	2	8, 16, 32	√	√	√	√	√	√	√	√	√
APDP	P-Bus data parity status clear register CHBA0	APDPERRSTC_CHBA0	0000 0000$_H$	32	FFF9 60B4$_H$	2	8, 16, 32	√	√	√	√	√	√	√	√	√
APDP	P-Bus data parity test mode control register CHBA0	APDPTMC_CHBA0	0000 0000$_H$	32	FFF9 60B8$_H$	2	16, 32	√	√	√	√	√	√	√	√	√

Table A.1 List of Registers (72/124)

Module	Register	Symbol	Value after Reset	Number of Bits	Address	Peripheral IP group	Access Size	Reset Source*1							Access Authority*1	
								POCRES	CVMRES	EXTRES	DBRES	ECMRES	BISTRES	SWRES	SV	UM
APDP	P-Bus data parity error address register CHBA0	APDPERRADR_CHBA0	$0000\ 0000_H$	32	$FFF9\ 60BC_H$	2	32	√	√	√	√	√	√	√	√	√
APDP	P-Bus data parity status register CHBA1	APDPERRST_CHBA1	$0000\ 0000_H$	32	$FFF9\ 60C0_H$	2	8, 16, 32	√	√	√	√	√	√	√	√	√
APDP	P-Bus data parity status clear register CHBA1	APDPERRSTC_CHBA1	$0000\ 0000_H$	32	$FFF9\ 60C4_H$	2	8, 16, 32	√	√	√	√	√	√	√	√	√
APDP	P-Bus data parity test mode control register CHBA1	APDPTMC_CHBA1	$0000\ 0000_H$	32	$FFF9\ 60C8_H$	2	16, 32	√	√	√	√	√	√	√	√	√
APDP	P-Bus data parity error address register CHBA1	APDPERRADR_CHBA1	$0000\ 0000_H$	32	$FFF9\ 60CC_H$	2	32	√	√	√	√	√	√	√	√	√
APDP	P-Bus data parity status register CHBA2	APDPERRST_CHBA2	$0000\ 0000_H$	32	$FFF9\ 60D0_H$	2	8, 16, 32	√	√	√	√	√	√	√	√	√
APDP	P-Bus data parity status clear register CHBA2	APDPERRSTC_CHBA2	$0000\ 0000_H$	32	$FFF9\ 60D4_H$	2	8, 16, 32	√	√	√	√	√	√	√	√	√
APDP	P-Bus data parity test mode control register CHBA2	APDPTMC_CHBA2	$0000\ 0000_H$	32	$FFF9\ 60D8_H$	2	16, 32	√	√	√	√	√	√	√	√	√
APDP	P-Bus data parity error address register CHBA2	APDPERRADR_CHBA2	$0000\ 0000_H$	32	$FFF9\ 60DC_H$	2	32	√	√	√	√	√	√	√	√	√
APDP	P-Bus data parity status register CHBA3	APDPERRST_CHBA3	$0000\ 0000_H$	32	$FFF9\ 60E0_H$	2	8, 16, 32	√	√	√	√	√	√	√	√	√
APDP	P-Bus data parity status clear register CHBA3	APDPERRSTC_CHBA3	$0000\ 0000_H$	32	$FFF9\ 60E4_H$	2	8, 16, 32	√	√	√	√	√	√	√	√	√
APDP	P-Bus data parity test mode control register CHBA3	APDPTMC_CHBA3	$0000\ 0000_H$	32	$FFF9\ 60E8_H$	2	16, 32	√	√	√	√	√	√	√	√	√
APDP	P-Bus data parity error address register CHBA3	APDPERRADR_CHBA3	$0000\ 0000_H$	32	$FFF9\ 60EC_H$	2	32	√	√	√	√	√	√	√	√	√
INTIF	Peripheral interrupt status register 0	PINT0	$0000\ 0000_H$	32	$FFF9\ 8000_H$	2	32	√	√	√	√	√	√	√	√	√
INTIF	Peripheral interrupt status register 1	PINT1	$0000\ 0000_H$	32	$FFF9\ 8004_H$	2	32	√	√	√	√	√	√	√	√	√
INTIF	Peripheral interrupt status register 2	PINT2	$0000\ 0000_H$	32	$FFF9\ 8008_H$	2	32	√	√	√	√	√	√	√	√	√
INTIF	Peripheral interrupt status register 3	PINT3	$0000\ 0000_H$	32	$FFF9\ 800C_H$	2	32	√	√	√	√	√	√	√	√	√
INTIF	Peripheral interrupt status register 4	PINT4	$0000\ 0000_H$	32	$FFF9\ 8010_H$	2	32	√	√	√	√	√	√	√	√	√
INTIF	Peripheral interrupt status register 5	PINT5	$0000\ 0000_H$	32	$FFF9\ 8014_H$	2	32	√	√	√	√	√	√	√	√	√
INTIF	Peripheral interrupt status register 6	PINT6	$0000\ 0000_H$	32	$FFF9\ 8018_H$	2	32	√	√	√	√	√	√	√	√	√
INTIF	Peripheral interrupt status register 7	PINT7	$0000\ 0000_H$	32	$FFF9\ 801C_H$	2	32	√	√	√	√	√	√	√	√	√
INTIF	Interrupt clear register 0	PINTCLR0	$0000\ 0000_H$	32	$FFF9\ 8020_H$	2	32	√	√	√	√	√	√	√	√	√
INTIF	Interrupt clear register 1	PINTCLR1	$0000\ 0000_H$	32	$FFF9\ 8024_H$	2	32	√	√	√	√	√	√	√	√	√
INTIF	Interrupt clear register 2	PINTCLR2	$0000\ 0000_H$	32	$FFF9\ 8028_H$	2	32	√	√	√	√	√	√	√	√	√
INTIF	Interrupt clear register 3	PINTCLR3	$0000\ 0000_H$	32	$FFF9\ 802C_H$	2	32	√	√	√	√	√	√	√	√	√
INTIF	Interrupt clear register 4	PINTCLR4	$0000\ 0000_H$	32	$FFF9\ 8030_H$	2	32	√	√	√	√	√	√	√	√	√
INTIF	Interrupt clear register 5	PINTCLR5	$0000\ 0000_H$	32	$FFF9\ 8034_H$	2	32	√	√	√	√	√	√	√	√	√
INTIF	Interrupt clear register 6	PINTCLR6	$0000\ 0000_H$	32	$FFF9\ 8038_H$	2	32	√	√	√	√	√	√	√	√	√
INTIF	Interrupt clear register 7	PINTCLR7	$0000\ 0000_H$	32	$FFF9\ 803C_H$	2	32	√	√	√	√	√	√	√	√	√
IPG	Peripheral device protection violation access information register	IPGECRUM	Undefined (retained)	16	$FFFE\ E002_H$	CPU	16	√	√	√	√	√	√	√	√	—
IPG	Peripheral device protection violation access address register	IPGADRUM	Undefined (retained)	32	$FFFE\ E008_H$	CPU	32	√	√	√	√	√	√	√	√	—
IPG	Peripheral device protection enable register	IPGENUM	00_H	8	$FFFE\ E00D_H$	CPU	8	√	√	√	√	√	√	√	√	—
IPG	Peripheral device protection setting register 0	IPGPMTUM0	00_H	8	$FFFE\ E020_H$	CPU	8	√	√	√	√	√	√	√	√	—
IPG	Peripheral device protection setting register 2	IPGPMTUM2	00_H	8	$FFFE\ E022_H$	CPU	8	√	√	√	√	√	√	√	√	—
IPG	Peripheral device protection setting register 3	IPGPMTUM3	00_H	8	$FFFE\ E023_H$	CPU	8	√	√	√	√	√	√	√	√	—
IPG	Peripheral device protection setting register 4	IPGPMTUM4	00_H	8	$FFFE\ E024_H$	CPU	8	√	√	√	√	√	√	√	√	—
PEG	PE guard SPID master decision control register	PEGSP	0000_H	16	$FFFE\ E60C_H$	CPU	8, 16	√	√	√	√	√	√	√	√	√
PEG	PE guard area 0 mask setting register	PEGG0MK	$0000\ 0000_H$	32	$FFFE\ E680_H$	CPU	8, 16, 32	√	√	√	√	√	√	√	√	√
PEG	PE guard area 0 base setting register	PEGG0BA	$0000\ 0000_H$	32	$FFFE\ E684_H$	CPU	8, 16, 32	√	√	√	√	√	√	√	√	√
PEG	PE guard area 1 mask setting register	PEGG1MK	$0000\ 0000_H$	32	$FFFE\ E690_H$	CPU	8, 16, 32	√	√	√	√	√	√	√	√	√
PEG	PE guard area 1 base setting register	PEGG1BA	$0000\ 0000_H$	32	$FFFE\ E694_H$	CPU	8, 16, 32	√	√	√	√	√	√	√	√	√
PEG	PE guard area 2 mask setting register	PEGG2MK	$0000\ 0000_H$	32	$FFFE\ E6A0_H$	CPU	8, 16, 32	√	√	√	√	√	√	√	√	√
PEG	PE guard area 2 base setting register	PEGG2BA	$0000\ 0000_H$	32	$FFFE\ E6A4_H$	CPU	8, 16, 32	√	√	√	√	√	√	√	√	√
PEG	PE guard area 3 mask setting register	PEGG3MK	$0000\ 0000_H$	32	$FFFE\ E6B0_H$	CPU	8, 16, 32	√	√	√	√	√	√	√	√	√
PEG	PE guard area 3 base setting register	PEGG3BA	$0000\ 0000_H$	32	$FFFE\ E6B4_H$	CPU	8, 16, 32	√	√	√	√	√	√	√	√	√
SEG	Error notification control register	SEGCONT	0000_H	16	$FFFE\ E980_H$	CPU	16	√	√	√	√	√	√	√	√	R: √ W: —
SEG	Error occurrence retention register	SEGFLAG	0000_H	16	$FFFE\ E982_H$	CPU	16	√	√	√	√	√	√	√	√	R: √ W: —
SEG	Error factor retention register (address)	SEGADDR	Undefined (retained)	32	$FFFE\ E988_H$	CPU	16, 32	√	√	√	√	√	√	√	√	R: √ W: —
INTC1	EI level interrupt control register 8	EIC8	$008F_H$	16	$FFFE\ EA10_H$	CPU	1, 8, 16	√	√	√	√	√	√	√	√	R: √ W: —
INTC1	EI level interrupt control register 9	EIC9	$008F_H$	16	$FFFE\ EA12_H$	CPU	1, 8, 16	√	√	√	√	√	√	√	√	R: √ W: —

Table A.1 List of Registers (73/124)

Module	Register	Symbol	Value after Reset	Number of Bits	Address	Peripheral IP group	Access Size	Reset Source*1							Access Authority*1	
								POCRES	CVMRES	EXTRES	DBRES	ECMRES	BISTRES	SWRES	SV	UM
INTC1	EI level interrupt control register 16	EIC16	$008F_H$	16	$FFFE\ EA20_H$	CPU	1, 8, 16	√	√	√	√	√	√	√	√	R: √ W: —
INTC1	EI level interrupt control register 17	EIC17	$008F_H$	16	$FFFE\ EA22_H$	CPU	1, 8, 16	√	√	√	√	√	√	√	√	R: √ W: —
INTC1	EI level interrupt control register 18	EIC18	$008F_H$	16	$FFFE\ EA24_H$	CPU	1, 8, 16	√	√	√	√	√	√	√	√	R: √ W: —
INTC1	EI level interrupt control register 19	EIC19	$008F_H$	16	$FFFE\ EA26_H$	CPU	1, 8, 16	√	√	√	√	√	√	√	√	R: √ W: —
INTC1	EI level interrupt control register 20	EIC20	$008F_H$	16	$FFFE\ EA28_H$	CPU	1, 8, 16	√	√	√	√	√	√	√	√	R: √ W: —
INTC1	EI level interrupt control register 21	EIC21	$008F_H$	16	$FFFE\ EA2A_H$	CPU	1, 8, 16	√	√	√	√	√	√	√	√	R: √ W: —
INTC1	EI level interrupt control register 22	EIC22	$008F_H$	16	$FFFE\ EA2C_H$	CPU	1, 8, 16	√	√	√	√	√	√	√	√	R: √ W: —
INTC1	EI level interrupt control register 23	EIC23	$008F_H$	16	$FFFE\ EA2E_H$	CPU	1, 8, 16	√	√	√	√	√	√	√	√	R: √ W: —
INTC1	EI level interrupt control register 24	EIC24	$008F_H$	16	$FFFE\ EA30_H$	CPU	1, 8, 16	√	√	√	√	√	√	√	√	R: √ W: —
INTC1	EI level interrupt control register 25	EIC25	$008F_H$	16	$FFFE\ EA32_H$	CPU	1, 8, 16	√	√	√	√	√	√	√	√	R: √ W: —
INTC1	EI level interrupt control register 26	EIC26	$008F_H$	16	$FFFE\ EA34_H$	CPU	1, 8, 16	√	√	√	√	√	√	√	√	R: √ W: —
INTC1	EI level interrupt control register 27	EIC27	$008F_H$	16	$FFFE\ EA36_H$	CPU	1, 8, 16	√	√	√	√	√	√	√	√	R: √ W: —
INTC1	EI level interrupt control register 28	EIC28	$008F_H$	16	$FFFE\ EA38_H$	CPU	1, 8, 16	√	√	√	√	√	√	√	√	R: √ W: —
INTC1	EI level interrupt control register 29	EIC29	$008F_H$	16	$FFFE\ EA3A_H$	CPU	1, 8, 16	√	√	√	√	√	√	√	√	R: √ W: —
INTC1	EI level interrupt control register 30	EIC30	$008F_H$	16	$FFFE\ EA3C_H$	CPU	1, 8, 16	√	√	√	√	√	√	√	√	R: √ W: —
INTC1	EI level interrupt control register 31	EIC31	$008F_H$	16	$FFFE\ EA3E_H$	CPU	1, 8, 16	√	√	√	√	√	√	√	√	R: √ W: —
INTC1	FE level NMI control register	FNC	0000_H	16	$FFFE\ EA78_H$	CPU	1, 8, 16	√	√	√	√	√	√	√	√	√
INTC1	FE level interrupt control register	FIC	0000_H	16	$FFFE\ EA7A_H$	CPU	1, 8, 16	√	√	√	√	√	√	√	√	√
INTC1	EI level interrupt mask register 0	IMR0	$FFFF\ FFFF_H$	32	$FFFE\ EAF0_H$	CPU	1, 8, 16, 32	√	√	√	√	√	√	√	√	R: √ W: —
INTC1	EI level interrupt bind register 8	EIBD8	$0000\ 0001_H$	32	$FFFE\ EB20_H$	CPU	32	√	√	√	√	√	√	√	√	R: √ W: —
INTC1	EI level interrupt bind register 9	EIBD9	$0000\ 0001_H$	32	$FFFE\ EB24_H$	CPU	32	√	√	√	√	√	√	√	√	R: √ W: —
INTC1	EI level interrupt bind register 16	EIBD16	$0000\ 0001_H$	32	$FFFE\ EB40_H$	CPU	32	√	√	√	√	√	√	√	√	R: √ W: —
INTC1	EI level interrupt bind register 17	EIBD17	$0000\ 0001_H$	32	$FFFE\ EB44_H$	CPU	32	√	√	√	√	√	√	√	√	R: √ W: —
INTC1	EI level interrupt bind register 18	EIBD18	$0000\ 0001_H$	32	$FFFE\ EB48_H$	CPU	32	√	√	√	√	√	√	√	√	R: √ W: —
INTC1	EI level interrupt bind register 19	EIBD19	$0000\ 0001_H$	32	$FFFE\ EB4C_H$	CPU	32	√	√	√	√	√	√	√	√	R: √ W: —
INTC1	EI level interrupt bind register 20	EIBD20	$0000\ 0001_H$	32	$FFFE\ EB50_H$	CPU	32	√	√	√	√	√	√	√	√	R: √ W: —
INTC1	EI level interrupt bind register 21	EIBD21	$0000\ 0001_H$	32	$FFFE\ EB54_H$	CPU	32	√	√	√	√	√	√	√	√	R: √ W: —
INTC1	EI level interrupt bind register 22	EIBD22	$0000\ 0001_H$	32	$FFFE\ EB58_H$	CPU	32	√	√	√	√	√	√	√	√	R: √ W: —
INTC1	EI level interrupt bind register 23	EIBD23	$0000\ 0001_H$	32	$FFFE\ EB5C_H$	CPU	32	√	√	√	√	√	√	√	√	R: √ W: —
INTC1	EI level interrupt bind register 24	EIBD24	$0000\ 0001_H$	32	$FFFE\ EB60_H$	CPU	32	√	√	√	√	√	√	√	√	R: √ W: —
INTC1	EI level interrupt bind register 25	EIBD25	$0000\ 0001_H$	32	$FFFE\ EB64_H$	CPU	32	√	√	√	√	√	√	√	√	R: √ W: —
INTC1	EI level interrupt bind register 26	EIBD26	$0000\ 0001_H$	32	$FFFE\ EB68_H$	CPU	32	√	√	√	√	√	√	√	√	R: √ W: —
INTC1	EI level interrupt bind register 27	EIBD27	$0000\ 0001_H$	32	$FFFE\ EB6C_H$	CPU	32	√	√	√	√	√	√	√	√	R: √ W: —
INTC1	EI level interrupt bind register 28	EIBD28	$0000\ 0001_H$	32	$FFFE\ EB70_H$	CPU	32	√	√	√	√	√	√	√	√	R: √ W: —
INTC1	EI level interrupt bind register 29	EIBD29	$0000\ 0001_H$	32	$FFFE\ EB74_H$	CPU	32	√	√	√	√	√	√	√	√	R: √ W: —
INTC1	EI level interrupt bind register 30	EIBD30	$0000\ 0001_H$	32	$FFFE\ EB78_H$	CPU	32	√	√	√	√	√	√	√	√	R: √ W: —

Table A.1 List of Registers (74/124)

Module	Register	Symbol	Value after Reset	Number of Bits	Address	Peripheral IP group	Access Size	Reset Source*1							Access Authority*1	
								POCRES	CVMRES	EXTRES	DBRES	ECMRES	BISTRES	SWRES	SV	UM
INTC1	EI level interrupt bind register 31	EIBD31	$0000\ 0001_H$	32	$FFFE\ EB7C_H$	CPU	32	√	√	√	√	√	√	√	√	R: √ W: —
TESTCOMP	Comparator test register 0	TESTCOMPREG0	$0000\ 0000_H$	32	$FFFE\ ED00_H$	CPU	8, 16, 32	√	√	√	√	√	√	√	√	√
TESTCOMP	Comparator test register 1	TESTCOMPREG1	$0000\ 0000_H$	32	$FFFE\ ED04_H$	CPU	8, 16, 32	√	√	√	√	√	√	√	√	√
CFU	ERAM banks 0 to 3 mapping enable register	TM_ME	$0000\ 0000_H$	32	$FFFF\ 7810_H$	0	32	√	√	√	√	√	√	√	√	√
CFU	ERAM banks 0 to 3 mapping status register	TM_MS	$0000\ 0000_H$	32	$FFFF\ 7814_H$	0	32	√	√	√	√	√	√	√	√	√
CFU	ERAM banks 0 to 7 mapping size configuration register	TM_BMC0	$0000\ 0000_H$	32	$FFFF\ 7830_H$	0	32	√	√	√	√	√	√	√	√	√
CFU	ERAM bank 0 mapping address register	TM_MA0	$0000\ 0000_H$	32	$FFFF\ 7840_H$	0	32	√	√	√	√	√	√	√	√	√
CFU	ERAM bank 1 mapping address register	TM_MA1	$0000\ 0000_H$	32	$FFFF\ 7844_H$	0	32	√	√	√	√	√	√	√	√	√
CFU	ERAM bank 2 mapping address register	TM_MA2	$0000\ 0000_H$	32	$FFFF\ 7848_H$	0	32	√	√	√	√	√	√	√	√	√
CFU	ERAM bank 3 mapping address register	TM_MA3	$0000\ 0000_H$	32	$FFFF\ 784C_H$	0	32	√	√	√	√	√	√	√	√	√
DMASS	DMA control register	DMACTL	$0000\ 0000_H$	32	$FFFF\ 8000_H$	0	32	√	√	√	√	√	√	√	√	—
DMASS	DTS control register 1	DTSCTL1	$0000\ 0000_H$	32	$FFFF\ 8010_H$	0	32	√	√	√	√	√	√	√	√	—
DMASS	DTS control register 2	DTSCTL2	$0000\ 0000_H$	32	$FFFF\ 8014_H$	0	32	√	√	√	√	√	√	√	√	—
DMASS	DTS status register	DTSSTS	$0000\ 0000_H$	32	$FFFF\ 8018_H$	0	32	√	√	√	√	√	√	√	√	√
DMASS	DMAC error register	DMACER	$0000\ 0000_H$	32	$FFFF\ 8020_H$	0	32	√	√	√	√	√	√	√	√	√
DMASS	DTS error register 1	DTSER1	$0000\ 0000_H$	32	$FFFF\ 8024_H$	0	32	√	√	√	√	√	√	√	√	√
DMASS	DTS error register 2	DTSER2	$0000\ 0000_H$	32	$FFFF\ 8028_H$	0	32	√	√	√	√	√	√	√	√	√
DMASS	DTS error clear register	DTSERC	$0000\ 0000_H$	32	$FFFF\ 802C_H$	0	32	√	√	√	√	√	√	√	√	—
DMASS	DMAC0 register access protection violation register	DM0CMV	$0000\ 0000_H$	32	$FFFF\ 8030_H$	0	32	√	√	√	√	√	√	√	√	—
DMASS	DMAC1 register access protection violation	DM1CMV	$0000\ 0000_H$	32	$FFFF\ 8034_H$	0	32	√	√	√	√	√	√	√	√	—
DMASS	DTS register access protection violation register	DTSCMV	$0000\ 0000_H$	32	$FFFF\ 8038_H$	0	32	√	√	√	√	√	√	√	√	—
DMASS	Register access protection violation clear register	CMVC	$0000\ 0000_H$	32	$FFFF\ 803C_H$	0	32	√	√	√	√	√	√	√	√	—
DMASS	DTS channel priority setting 0	DTSPR0	$0000\ 0000_H$	32	$FFFF\ 8060_H$	0	32	√	√	√	√	√	√	√	√	—
DMASS	DTS channel priority setting 1	DTSPR1	$0000\ 0000_H$	32	$FFFF\ 8064_H$	0	32	√	√	√	√	√	√	√	√	—
DMASS	DTS channel priority setting 2	DTSPR2	$0000\ 0000_H$	32	$FFFF\ 8068_H$	0	32	√	√	√	√	√	√	√	√	—
DMASS	DTS channel priority setting 3	DTSPR3	$0000\ 0000_H$	32	$FFFF\ 806C_H$	0	32	√	√	√	√	√	√	√	√	—
DMASS	DTS channel priority setting 4	DTSPR4	$0000\ 0000_H$	32	$FFFF\ 8070_H$	0	32	√	√	√	√	√	√	√	√	—
DMASS	DTS channel priority setting 5	DTSPR5	$0000\ 0000_H$	32	$FFFF\ 8074_H$	0	32	√	√	√	√	√	√	√	√	—
DMASS	DTS channel priority setting 6	DTSPR6	$0000\ 0000_H$	32	$FFFF\ 8078_H$	0	32	√	√	√	√	√	√	√	√	—
DMASS	DTS channel priority setting 7	DTSPR7	$0000\ 0000_H$	32	$FFFF\ 807C_H$	0	32	√	√	√	√	√	√	√	√	—
DMASS	DTSRAM ECC control register	DTRECCTL	$0000\ 0000_H$	32	$FFFF\ 8080_H$	0	32	√	√	√	√	√	√	√	√	—
DMASS	DTSRAM Error notification control register	DTRERINT	$0000\ 0002_H$	32	$FFFF\ 8084_H$	0	32	√	√	√	√	√	√	√	√	—
DMASS	DTSRAM test control register	DTRTSCTL	$0000\ 0000_H$	32	$FFFF\ 8094_H$	0	32	√	√	√	√	√	√	√	√	—
DMASS	DTSRAM test write data register	DTRTWDAT	$0000\ 0000_H$	32	$FFFF\ 8098_H$	0	32	√	√	√	√	√	√	√	√	—
DMASS	DTSRAM test read data register	DTRTRDAT	$0000\ 0000_H$	32	$FFFF\ 809C_H$	0	32	√	√	√	√	√	√	√	√	—
DMASS	DMAC0 channel 0 channel master setting	DM00CM	$0000\ 0010_H$	32	$FFFF\ 8100_H$	0	32	√	√	√	√	√	√	√	√	—
DMASS	DMAC0 channel 1 channel master setting	DM01CM	$0000\ 0010_H$	32	$FFFF\ 8104_H$	0	32	√	√	√	√	√	√	√	√	—
DMASS	DMAC0 channel 2 channel master setting	DM02CM	$0000\ 0010_H$	32	$FFFF\ 8108_H$	0	32	√	√	√	√	√	√	√	√	—
DMASS	DMAC0 channel 3 channel master setting	DM03CM	$0000\ 0010_H$	32	$FFFF\ 810C_H$	0	32	√	√	√	√	√	√	√	√	—
DMASS	DMAC0 channel 4 channel master setting	DM04CM	$0000\ 0010_H$	32	$FFFF\ 8110_H$	0	32	√	√	√	√	√	√	√	√	—
DMASS	DMAC0 channel 5 channel master setting	DM05CM	$0000\ 0010_H$	32	$FFFF\ 8114_H$	0	32	√	√	√	√	√	√	√	√	—
DMASS	DMAC0 channel 6 channel master setting	DM06CM	$0000\ 0010_H$	32	$FFFF\ 8118_H$	0	32	√	√	√	√	√	√	√	√	—
DMASS	DMAC0 channel 7 channel master setting	DM07CM	$0000\ 0010_H$	32	$FFFF\ 811C_H$	0	32	√	√	√	√	√	√	√	√	—
DMASS	DMAC1 channel 0 channel master setting	DM10CM	$0000\ 0010_H$	32	$FFFF\ 8120_H$	0	32	√	√	√	√	√	√	√	√	—
DMASS	DMAC1 channel 1 channel master setting	DM11CM	$0000\ 0010_H$	32	$FFFF\ 8124_H$	0	32	√	√	√	√	√	√	√	√	—
DMASS	DMAC1 channel 2 channel master setting	DM12CM	$0000\ 0010_H$	32	$FFFF\ 8128_H$	0	32	√	√	√	√	√	√	√	√	—
DMASS	DMAC1 channel 3 channel master setting	DM13CM	$0000\ 0010_H$	32	$FFFF\ 812C_H$	0	32	√	√	√	√	√	√	√	√	—
DMASS	DMAC1 channel 4 channel master setting	DM14CM	$0000\ 0010_H$	32	$FFFF\ 8130_H$	0	32	√	√	√	√	√	√	√	√	—
DMASS	DMAC1 channel 5 channel master setting	DM15CM	$0000\ 0010_H$	32	$FFFF\ 8134_H$	0	32	√	√	√	√	√	√	√	√	—
DMASS	DMAC1 channel 6 channel master setting	DM16CM	$0000\ 0010_H$	32	$FFFF\ 8138_H$	0	32	√	√	√	√	√	√	√	√	—
DMASS	DMAC1 channel 7 channel master setting	DM17CM	$0000\ 0010_H$	32	$FFFF\ 813C_H$	0	32	√	√	√	√	√	√	√	√	—
DMASS	DTS channel 000 channel master setting	DTS000CM	Undefined	32	$FFFF\ 8200_H$	0	32	√	√	√	√	√	√	√	√	—

Table A.1 List of Registers (75/124)

Module	Register	Symbol	Value after Reset	Number of Bits	Address	Peripheral IP group	Access Size	Reset Source*1							Access Authority*1	
								POCRES	CVMRES	EXTRES	DBRES	ECMRES	BISTRES	SWRES	SV	UM
DMASS	DTS channel 001 channel master setting	DTS001CM	Undefined	32	FFFF 8204$_H$	0	32	√	√	√	√	√	√	√	√	—
DMASS	DTS channel 002 channel master setting	DTS002CM	Undefined	32	FFFF 8208$_H$	0	32	√	√	√	√	√	√	√	√	—
DMASS	DTS channel 003 channel master setting	DTS003CM	Undefined	32	FFFF 820C$_H$	0	32	√	√	√	√	√	√	√	√	—
DMASS	DTS channel 004 channel master setting	DTS004CM	Undefined	32	FFFF 8210$_H$	0	32	√	√	√	√	√	√	√	√	—
DMASS	DTS channel 005 channel master setting	DTS005CM	Undefined	32	FFFF 8214$_H$	0	32	√	√	√	√	√	√	√	√	—
DMASS	DTS channel 006 channel master setting	DTS006CM	Undefined	32	FFFF 8218$_H$	0	32	√	√	√	√	√	√	√	√	—
DMASS	DTS channel 007 channel master setting	DTS007CM	Undefined	32	FFFF 821C$_H$	0	32	√	√	√	√	√	√	√	√	—
DMASS	DTS channel 008 channel master setting	DTS008CM	Undefined	32	FFFF 8220$_H$	0	32	√	√	√	√	√	√	√	√	—
DMASS	DTS channel 009 channel master setting	DTS009CM	Undefined	32	FFFF 8224$_H$	0	32	√	√	√	√	√	√	√	√	—
DMASS	DTS channel 010 channel master setting	DTS010CM	Undefined	32	FFFF 8228$_H$	0	32	√	√	√	√	√	√	√	√	—
DMASS	DTS channel 011 channel master setting	DTS011CM	Undefined	32	FFFF 822C$_H$	0	32	√	√	√	√	√	√	√	√	—
DMASS	DTS channel 012 channel master setting	DTS012CM	Undefined	32	FFFF 8230$_H$	0	32	√	√	√	√	√	√	√	√	—
DMASS	DTS channel 013 channel master setting	DTS013CM	Undefined	32	FFFF 8234$_H$	0	32	√	√	√	√	√	√	√	√	—
DMASS	DTS channel 014 channel master setting	DTS014CM	Undefined	32	FFFF 8238$_H$	0	32	√	√	√	√	√	√	√	√	—
DMASS	DTS channel 015 channel master setting	DTS015CM	Undefined	32	FFFF 823C$_H$	0	32	√	√	√	√	√	√	√	√	—
DMASS	DTS channel 016 channel master setting	DTS016CM	Undefined	32	FFFF 8240$_H$	0	32	√	√	√	√	√	√	√	√	—
DMASS	DTS channel 017 channel master setting	DTS017CM	Undefined	32	FFFF 8244$_H$	0	32	√	√	√	√	√	√	√	√	—
DMASS	DTS channel 018 channel master setting	DTS018CM	Undefined	32	FFFF 8248$_H$	0	32	√	√	√	√	√	√	√	√	—
DMASS	DTS channel 019 channel master setting	DTS019CM	Undefined	32	FFFF 824C$_H$	0	32	√	√	√	√	√	√	√	√	—
DMASS	DTS channel 020 channel master setting	DTS020CM	Undefined	32	FFFF 8250$_H$	0	32	√	√	√	√	√	√	√	√	—
DMASS	DTS channel 021 channel master setting	DTS021CM	Undefined	32	FFFF 8254$_H$	0	32	√	√	√	√	√	√	√	√	—
DMASS	DTS channel 022 channel master setting	DTS022CM	Undefined	32	FFFF 8258$_H$	0	32	√	√	√	√	√	√	√	√	—
DMASS	DTS channel 023 channel master setting	DTS023CM	Undefined	32	FFFF 825C$_H$	0	32	√	√	√	√	√	√	√	√	—
DMASS	DTS channel 024 channel master setting	DTS024CM	Undefined	32	FFFF 8260$_H$	0	32	√	√	√	√	√	√	√	√	—
DMASS	DTS channel 025 channel master setting	DTS025CM	Undefined	32	FFFF 8264$_H$	0	32	√	√	√	√	√	√	√	√	—
DMASS	DTS channel 026 channel master setting	DTS026CM	Undefined	32	FFFF 8268$_H$	0	32	√	√	√	√	√	√	√	√	—
DMASS	DTS channel 027 channel master setting	DTS027CM	Undefined	32	FFFF 826C$_H$	0	32	√	√	√	√	√	√	√	√	—
DMASS	DTS channel 028 channel master setting	DTS028CM	Undefined	32	FFFF 8270$_H$	0	32	√	√	√	√	√	√	√	√	—
DMASS	DTS channel 029 channel master setting	DTS029CM	Undefined	32	FFFF 8274$_H$	0	32	√	√	√	√	√	√	√	√	—
DMASS	DTS channel 030 channel master setting	DTS030CM	Undefined	32	FFFF 8278$_H$	0	32	√	√	√	√	√	√	√	√	—
DMASS	DTS channel 031 channel master setting	DTS031CM	Undefined	32	FFFF 827C$_H$	0	32	√	√	√	√	√	√	√	√	—
DMASS	DTS channel 032 channel master setting	DTS032CM	Undefined	32	FFFF 8280$_H$	0	32	√	√	√	√	√	√	√	√	—
DMASS	DTS channel 033 channel master setting	DTS033CM	Undefined	32	FFFF 8284$_H$	0	32	√	√	√	√	√	√	√	√	—
DMASS	DTS channel 034 channel master setting	DTS034CM	Undefined	32	FFFF 8288$_H$	0	32	√	√	√	√	√	√	√	√	—
DMASS	DTS channel 035 channel master setting	DTS035CM	Undefined	32	FFFF 828C$_H$	0	32	√	√	√	√	√	√	√	√	—
DMASS	DTS channel 036 channel master setting	DTS036CM	Undefined	32	FFFF 8290$_H$	0	32	√	√	√	√	√	√	√	√	—
DMASS	DTS channel 037 channel master setting	DTS037CM	Undefined	32	FFFF 8294$_H$	0	32	√	√	√	√	√	√	√	√	—
DMASS	DTS channel 038 channel master setting	DTS038CM	Undefined	32	FFFF 8298$_H$	0	32	√	√	√	√	√	√	√	√	—
DMASS	DTS channel 039 channel master setting	DTS039CM	Undefined	32	FFFF 829C$_H$	0	32	√	√	√	√	√	√	√	√	—
DMASS	DTS channel 040 channel master setting	DTS040CM	Undefined	32	FFFF 82A0$_H$	0	32	√	√	√	√	√	√	√	√	—
DMASS	DTS channel 041 channel master setting	DTS041CM	Undefined	32	FFFF 82A4$_H$	0	32	√	√	√	√	√	√	√	√	—
DMASS	DTS channel 042 channel master setting	DTS042CM	Undefined	32	FFFF 82A8$_H$	0	32	√	√	√	√	√	√	√	√	—
DMASS	DTS channel 043 channel master setting	DTS043CM	Undefined	32	FFFF 82AC$_H$	0	32	√	√	√	√	√	√	√	√	—
DMASS	DTS channel 044 channel master setting	DTS044CM	Undefined	32	FFFF 82B0$_H$	0	32	√	√	√	√	√	√	√	√	—
DMASS	DTS channel 045 channel master setting	DTS045CM	Undefined	32	FFFF 82B4$_H$	0	32	√	√	√	√	√	√	√	√	—
DMASS	DTS channel 046 channel master setting	DTS046CM	Undefined	32	FFFF 82B8$_H$	0	32	√	√	√	√	√	√	√	√	—
DMASS	DTS channel 047 channel master setting	DTS047CM	Undefined	32	FFFF 82BC$_H$	0	32	√	√	√	√	√	√	√	√	—
DMASS	DTS channel 048 channel master setting	DTS048CM	Undefined	32	FFFF 82C0$_H$	0	32	√	√	√	√	√	√	√	√	—
DMASS	DTS channel 049 channel master setting	DTS049CM	Undefined	32	FFFF 82C4$_H$	0	32	√	√	√	√	√	√	√	√	—
DMASS	DTS channel 050 channel master setting	DTS050CM	Undefined	32	FFFF 82C8$_H$	0	32	√	√	√	√	√	√	√	√	—
DMASS	DTS channel 051 channel master setting	DTS051CM	Undefined	32	FFFF 82CC$_H$	0	32	√	√	√	√	√	√	√	√	—
DMASS	DTS channel 052 channel master setting	DTS052CM	Undefined	32	FFFF 82D0$_H$	0	32	√	√	√	√	√	√	√	√	—
DMASS	DTS channel 053 channel master setting	DTS053CM	Undefined	32	FFFF 82D4$_H$	0	32	√	√	√	√	√	√	√	√	—

Table A.1 List of Registers (76/124)

Module	Register	Symbol	Value after Reset	Number of Bits	Address	Peripheral IP group	Access Size	Reset Source*1							Access Authority*1	
								POCRES	CVMRES	EXTRES	DBRES	ECMRES	BISTRES	SWRES	SV	UM
DMASS	DTS channel 054 channel master setting	DTS054CM	Undefined	32	FFFF 82D8$_H$	0	32	√	√	√	√	√	√	√	√	—
DMASS	DTS channel 055 channel master setting	DTS055CM	Undefined	32	FFFF 82DC$_H$	0	32	√	√	√	√	√	√	√	√	—
DMASS	DTS channel 056 channel master setting	DTS056CM	Undefined	32	FFFF 82E0$_H$	0	32	√	√	√	√	√	√	√	√	—
DMASS	DTS channel 057 channel master setting	DTS057CM	Undefined	32	FFFF 82E4$_H$	0	32	√	√	√	√	√	√	√	√	—
DMASS	DTS channel 058 channel master setting	DTS058CM	Undefined	32	FFFF 82E8$_H$	0	32	√	√	√	√	√	√	√	√	—
DMASS	DTS channel 059 channel master setting	DTS059CM	Undefined	32	FFFF 82EC$_H$	0	32	√	√	√	√	√	√	√	√	—
DMASS	DTS channel 060 channel master setting	DTS060CM	Undefined	32	FFFF 82F0$_H$	0	32	√	√	√	√	√	√	√	√	—
DMASS	DTS channel 061 channel master setting	DTS061CM	Undefined	32	FFFF 82F4$_H$	0	32	√	√	√	√	√	√	√	√	—
DMASS	DTS channel 062 channel master setting	DTS062CM	Undefined	32	FFFF 82F8$_H$	0	32	√	√	√	√	√	√	√	√	—
DMASS	DTS channel 063 channel master setting	DTS063CM	Undefined	32	FFFF 82FC$_H$	0	32	√	√	√	√	√	√	√	√	—
DMASS	DTS channel 064 channel master setting	DTS064CM	Undefined	32	FFFF 8300$_H$	0	32	√	√	√	√	√	√	√	√	—
DMASS	DTS channel 065 channel master setting	DTS065CM	Undefined	32	FFFF 8304$_H$	0	32	√	√	√	√	√	√	√	√	—
DMASS	DTS channel 066 channel master setting	DTS066CM	Undefined	32	FFFF 8308$_H$	0	32	√	√	√	√	√	√	√	√	—
DMASS	DTS channel 067 channel master setting	DTS067CM	Undefined	32	FFFF 830C$_H$	0	32	√	√	√	√	√	√	√	√	—
DMASS	DTS channel 068 channel master setting	DTS068CM	Undefined	32	FFFF 8310$_H$	0	32	√	√	√	√	√	√	√	√	—
DMASS	DTS channel 069 channel master setting	DTS069CM	Undefined	32	FFFF 8314$_H$	0	32	√	√	√	√	√	√	√	√	—
DMASS	DTS channel 070 channel master setting	DTS070CM	Undefined	32	FFFF 8318$_H$	0	32	√	√	√	√	√	√	√	√	—
DMASS	DTS channel 071 channel master setting	DTS071CM	Undefined	32	FFFF 831C$_H$	0	32	√	√	√	√	√	√	√	√	—
DMASS	DTS channel 072 channel master setting	DTS072CM	Undefined	32	FFFF 8320$_H$	0	32	√	√	√	√	√	√	√	√	—
DMASS	DTS channel 073 channel master setting	DTS073CM	Undefined	32	FFFF 8324$_H$	0	32	√	√	√	√	√	√	√	√	—
DMASS	DTS channel 074 channel master setting	DTS074CM	Undefined	32	FFFF 8328$_H$	0	32	√	√	√	√	√	√	√	√	—
DMASS	DTS channel 075 channel master setting	DTS075CM	Undefined	32	FFFF 832C$_H$	0	32	√	√	√	√	√	√	√	√	—
DMASS	DTS channel 076 channel master setting	DTS076CM	Undefined	32	FFFF 8330$_H$	0	32	√	√	√	√	√	√	√	√	—
DMASS	DTS channel 077 channel master setting	DTS077CM	Undefined	32	FFFF 8334$_H$	0	32	√	√	√	√	√	√	√	√	—
DMASS	DTS channel 078 channel master setting	DTS078CM	Undefined	32	FFFF 8338$_H$	0	32	√	√	√	√	√	√	√	√	—
DMASS	DTS channel 079 channel master setting	DTS079CM	Undefined	32	FFFF 833C$_H$	0	32	√	√	√	√	√	√	√	√	—
DMASS	DTS channel 080 channel master setting	DTS080CM	Undefined	32	FFFF 8340$_H$	0	32	√	√	√	√	√	√	√	√	—
DMASS	DTS channel 081 channel master setting	DTS081CM	Undefined	32	FFFF 8344$_H$	0	32	√	√	√	√	√	√	√	√	—
DMASS	DTS channel 082 channel master setting	DTS082CM	Undefined	32	FFFF 8348$_H$	0	32	√	√	√	√	√	√	√	√	—
DMASS	DTS channel 083 channel master setting	DTS083CM	Undefined	32	FFFF 834C$_H$	0	32	√	√	√	√	√	√	√	√	—
DMASS	DTS channel 084 channel master setting	DTS084CM	Undefined	32	FFFF 8350$_H$	0	32	√	√	√	√	√	√	√	√	—
DMASS	DTS channel 085 channel master setting	DTS085CM	Undefined	32	FFFF 8354$_H$	0	32	√	√	√	√	√	√	√	√	—
DMASS	DTS channel 086 channel master setting	DTS086CM	Undefined	32	FFFF 8358$_H$	0	32	√	√	√	√	√	√	√	√	—
DMASS	DTS channel 087 channel master setting	DTS087CM	Undefined	32	FFFF 835C$_H$	0	32	√	√	√	√	√	√	√	√	—
DMASS	DTS channel 088 channel master setting	DTS088CM	Undefined	32	FFFF 8360$_H$	0	32	√	√	√	√	√	√	√	√	—
DMASS	DTS channel 089 channel master setting	DTS089CM	Undefined	32	FFFF 8364$_H$	0	32	√	√	√	√	√	√	√	√	—
DMASS	DTS channel 090 channel master setting	DTS090CM	Undefined	32	FFFF 8368$_H$	0	32	√	√	√	√	√	√	√	√	—
DMASS	DTS channel 091 channel master setting	DTS091CM	Undefined	32	FFFF 836C$_H$	0	32	√	√	√	√	√	√	√	√	—
DMASS	DTS channel 092 channel master setting	DTS092CM	Undefined	32	FFFF 8370$_H$	0	32	√	√	√	√	√	√	√	√	—
DMASS	DTS channel 093 channel master setting	DTS093CM	Undefined	32	FFFF 8374$_H$	0	32	√	√	√	√	√	√	√	√	—
DMASS	DTS channel 094 channel master setting	DTS094CM	Undefined	32	FFFF 8378$_H$	0	32	√	√	√	√	√	√	√	√	—
DMASS	DTS channel 095 channel master setting	DTS095CM	Undefined	32	FFFF 837C$_H$	0	32	√	√	√	√	√	√	√	√	—
DMASS	DTS channel 096 channel master setting	DTS096CM	Undefined	32	FFFF 8380$_H$	0	32	√	√	√	√	√	√	√	√	—
DMASS	DTS channel 097 channel master setting	DTS097CM	Undefined	32	FFFF 8384$_H$	0	32	√	√	√	√	√	√	√	√	—
DMASS	DTS channel 098 channel master setting	DTS098CM	Undefined	32	FFFF 8388$_H$	0	32	√	√	√	√	√	√	√	√	—
DMASS	DTS channel 099 channel master setting	DTS099CM	Undefined	32	FFFF 838C$_H$	0	32	√	√	√	√	√	√	√	√	—
DMASS	DTS channel 100 channel master setting	DTS100CM	Undefined	32	FFFF 8390$_H$	0	32	√	√	√	√	√	√	√	√	—
DMASS	DTS channel 101 channel master setting	DTS101CM	Undefined	32	FFFF 8394$_H$	0	32	√	√	√	√	√	√	√	√	—
DMASS	DTS channel 102 channel master setting	DTS102CM	Undefined	32	FFFF 8398$_H$	0	32	√	√	√	√	√	√	√	√	—
DMASS	DTS channel 103 channel master setting	DTS103CM	Undefined	32	FFFF 839C$_H$	0	32	√	√	√	√	√	√	√	√	—
DMASS	DTS channel 104 channel master setting	DTS104CM	Undefined	32	FFFF 83A0$_H$	0	32	√	√	√	√	√	√	√	√	—
DMASS	DTS channel 105 channel master setting	DTS105CM	Undefined	32	FFFF 83A4$_H$	0	32	√	√	√	√	√	√	√	√	—
DMASS	DTS channel 106 channel master setting	DTS106CM	Undefined	32	FFFF 83A8$_H$	0	32	√	√	√	√	√	√	√	√	—

Table A.1 List of Registers (77/124)

Module	Register	Symbol	Value after Reset	Number of Bits	Address	Peripheral IP group	Access Size	Reset Source*1							Access Authority*1	
								POCRES	CVMRES	EXTRES	DBRES	ECMRES	BISTRES	SWRES	SV	UM
DMASS	DTS channel 107 channel master setting	DTS107CM	Undefined	32	FFFF 83AC$_H$	0	32	√	√	√	√	√	√	√	√	—
DMASS	DTS channel 108 channel master setting	DTS108CM	Undefined	32	FFFF 83B0$_H$	0	32	√	√	√	√	√	√	√	√	—
DMASS	DTS channel 109 channel master setting	DTS109CM	Undefined	32	FFFF 83B4$_H$	0	32	√	√	√	√	√	√	√	√	—
DMASS	DTS channel 110 channel master setting	DTS110CM	Undefined	32	FFFF 83B8$_H$	0	32	√	√	√	√	√	√	√	√	—
DMASS	DTS channel 111 channel master setting	DTS111CM	Undefined	32	FFFF 83BC$_H$	0	32	√	√	√	√	√	√	√	√	—
DMASS	DTS channel 112 channel master setting	DTS112CM	Undefined	32	FFFF 83C0$_H$	0	32	√	√	√	√	√	√	√	√	—
DMASS	DTS channel 113 channel master setting	DTS113CM	Undefined	32	FFFF 83C4$_H$	0	32	√	√	√	√	√	√	√	√	—
DMASS	DTS channel 114 channel master setting	DTS114CM	Undefined	32	FFFF 83C8$_H$	0	32	√	√	√	√	√	√	√	√	—
DMASS	DTS channel 115 channel master setting	DTS115CM	Undefined	32	FFFF 83CC$_H$	0	32	√	√	√	√	√	√	√	√	—
DMASS	DTS channel 116 channel master setting	DTS116CM	Undefined	32	FFFF 83D0$_H$	0	32	√	√	√	√	√	√	√	√	—
DMASS	DTS channel 117 channel master setting	DTS117CM	Undefined	32	FFFF 83D4$_H$	0	32	√	√	√	√	√	√	√	√	—
DMASS	DTS channel 118 channel master setting	DTS118CM	Undefined	32	FFFF 83D8$_H$	0	32	√	√	√	√	√	√	√	√	—
DMASS	DTS channel 119 channel master setting	DTS119CM	Undefined	32	FFFF 83DC$_H$	0	32	√	√	√	√	√	√	√	√	—
DMASS	DTS channel 120 channel master setting	DTS120CM	Undefined	32	FFFF 83E0$_H$	0	32	√	√	√	√	√	√	√	√	—
DMASS	DTS channel 121 channel master setting	DTS121CM	Undefined	32	FFFF 83E4$_H$	0	32	√	√	√	√	√	√	√	√	—
DMASS	DTS channel 122 channel master setting	DTS122CM	Undefined	32	FFFF 83E8$_H$	0	32	√	√	√	√	√	√	√	√	—
DMASS	DTS channel 123 channel master setting	DTS123CM	Undefined	32	FFFF 83EC$_H$	0	32	√	√	√	√	√	√	√	√	—
DMASS	DTS channel 124 channel master setting	DTS124CM	Undefined	32	FFFF 83F0$_H$	0	32	√	√	√	√	√	√	√	√	—
DMASS	DMAC source address	DSA0	0000 0000$_H$	32	FFFF 8400$_H$	0	32	√	√	√	√	√	√	√	√	√
DMASS	DMAC destination address	DDA0	0000 0000$_H$	32	FFFF 8404$_H$	0	32	√	√	√	√	√	√	√	√	√
DMASS	DMAC transfer count	DTC0	0000 0000$_H$	32	FFFF 8408$_H$	0	32	√	√	√	√	√	√	√	√	√
DMASS	DMAC transfer control	DTCT0	0000 0000$_H$	32	FFFF 840C$_H$	0	32	√	√	√	√	√	√	√	√	√
DMASS	DMAC reload source address	DRSA0	0000 0000$_H$	32	FFFF 8410$_H$	0	32	√	√	√	√	√	√	√	√	√
DMASS	DMAC reload destination address	DRDA0	0000 0000$_H$	32	FFFF 8414$_H$	0	32	√	√	√	√	√	√	√	√	√
DMASS	DMAC reload transfer count	DRTC0	0000 0000$_H$	32	FFFF 8418$_H$	0	32	√	√	√	√	√	√	√	√	√
DMASS	DMAC transfer count compare	DTCC0	0000 0000$_H$	32	FFFF 841C$_H$	0	32	√	√	√	√	√	√	√	√	√
DMASS	DMAC channel operation enable setting	DCEN0	0000 0000$_H$	32	FFFF 8420$_H$	0	32	√	√	√	√	√	√	√	√	√
DMASS	DMAC transfer status	DCST0	0000 0000$_H$	32	FFFF 8424$_H$	0	32	√	√	√	√	√	√	√	√	√
DMASS	DMAC transfer status set	DCSTS0	0000 0000$_H$	32	FFFF 8428$_H$	0	32	√	√	√	√	√	√	√	√	√
DMASS	DMAC transfer status clear	DCSTC0	0000 0000$_H$	32	FFFF 842C$_H$	0	32	√	√	√	√	√	√	√	√	√
DMASS	DTFR setting	DTFR0	0000 0000$_H$	32	FFFF 8430$_H$	0	32	√	√	√	√	√	√	√	√	√
DMASS	DTFR transfer request status	DTFRRQ0	0000 0000$_H$	32	FFFF 8434$_H$	0	32	√	√	√	√	√	√	√	√	√
DMASS	DTFR transfer request clear	DTFRRQC0	0000 0000$_H$	32	FFFF 8438$_H$	0	32	√	√	√	√	√	√	√	√	√
DMASS	DMAC source address	DSA1	0000 0000$_H$	32	FFFF 8440$_H$	0	32	√	√	√	√	√	√	√	√	√
DMASS	DMAC destination address	DDA1	0000 0000$_H$	32	FFFF 8444$_H$	0	32	√	√	√	√	√	√	√	√	√
DMASS	DMAC transfer count	DTC1	0000 0000$_H$	32	FFFF 8448$_H$	0	32	√	√	√	√	√	√	√	√	√
DMASS	DMAC transfer control	DTCT1	0000 0000$_H$	32	FFFF 844C$_H$	0	32	√	√	√	√	√	√	√	√	√
DMASS	DMAC reload source address	DRSA1	0000 0000$_H$	32	FFFF 8450$_H$	0	32	√	√	√	√	√	√	√	√	√
DMASS	DMAC reload destination address	DRDA1	0000 0000$_H$	32	FFFF 8454$_H$	0	32	√	√	√	√	√	√	√	√	√
DMASS	DMAC reload transfer count	DRTC1	0000 0000$_H$	32	FFFF 8458$_H$	0	32	√	√	√	√	√	√	√	√	√
DMASS	DMAC transfer count compare	DTCC1	0000 0000$_H$	32	FFFF 845C$_H$	0	32	√	√	√	√	√	√	√	√	√
DMASS	DMAC channel operation enable setting	DCEN1	0000 0000$_H$	32	FFFF 8460$_H$	0	32	√	√	√	√	√	√	√	√	√
DMASS	DMAC transfer status	DCST1	0000 0000$_H$	32	FFFF 8464$_H$	0	32	√	√	√	√	√	√	√	√	√
DMASS	DMAC transfer status set	DCSTS1	0000 0000$_H$	32	FFFF 8468$_H$	0	32	√	√	√	√	√	√	√	√	√
DMASS	DMAC transfer status clear	DCSTC1	0000 0000$_H$	32	FFFF 846C$_H$	0	32	√	√	√	√	√	√	√	√	√
DMASS	DTFR setting	DTFR1	0000 0000$_H$	32	FFFF 8470$_H$	0	32	√	√	√	√	√	√	√	√	√
DMASS	DTFR transfer request status	DTFRRQ1	0000 0000$_H$	32	FFFF 8474$_H$	0	32	√	√	√	√	√	√	√	√	√
DMASS	DTFR transfer request clear	DTFRRQC1	0000 0000$_H$	32	FFFF 8478$_H$	0	32	√	√	√	√	√	√	√	√	√
DMASS	DMAC source address	DSA2	0000 0000$_H$	32	FFFF 8480$_H$	0	32	√	√	√	√	√	√	√	√	√
DMASS	DMAC destination address	DDA2	0000 0000$_H$	32	FFFF 8484$_H$	0	32	√	√	√	√	√	√	√	√	√
DMASS	DMAC transfer count	DTC2	0000 0000$_H$	32	FFFF 8488$_H$	0	32	√	√	√	√	√	√	√	√	√
DMASS	DMAC transfer control	DTCT2	0000 0000$_H$	32	FFFF 848C$_H$	0	32	√	√	√	√	√	√	√	√	√
DMASS	DMAC reload source address	DRSA2	0000 0000$_H$	32	FFFF 8490$_H$	0	32	√	√	√	√	√	√	√	√	√

Table A.1 List of Registers (78/124)

Module	Register	Symbol	Value after Reset	Number of Bits	Address	Peripheral IP group	Access Size	Reset Source*1							Access Authority*1	
								POCRES	CVMRES	EXTRES	DBRES	ECMRES	BISTRES	SWRES	SV	UM
DMASS	DMAC reload destination address	DRDA2	$0000\ 0000_H$	32	$FFFF\ 8494_H$	0	32	√	√	√	√	√	√	√	√	√
DMASS	DMAC reload transfer count	DRTC2	$0000\ 0000_H$	32	$FFFF\ 8498_H$	0	32	√	√	√	√	√	√	√	√	√
DMASS	DMAC transfer count compare	DTCC2	$0000\ 0000_H$	32	$FFFF\ 849C_H$	0	32	√	√	√	√	√	√	√	√	√
DMASS	DMAC channel operation enable setting	DCEN2	$0000\ 0000_H$	32	$FFFF\ 84A0_H$	0	32	√	√	√	√	√	√	√	√	√
DMASS	DMAC transfer status	DCST2	$0000\ 0000_H$	32	$FFFF\ 84A4_H$	0	32	√	√	√	√	√	√	√	√	√
DMASS	DMAC transfer status set	DCSTS2	$0000\ 0000_H$	32	$FFFF\ 84A8_H$	0	32	√	√	√	√	√	√	√	√	√
DMASS	DMAC transfer status clear	DCSTC2	$0000\ 0000_H$	32	$FFFF\ 84AC_H$	0	32	√	√	√	√	√	√	√	√	√
DMASS	DTFR setting	DTFR2	$0000\ 0000_H$	32	$FFFF\ 84B0_H$	0	32	√	√	√	√	√	√	√	√	√
DMASS	DTFR transfer request status	DTFRRQ2	$0000\ 0000_H$	32	$FFFF\ 84B4_H$	0	32	√	√	√	√	√	√	√	√	√
DMASS	DTFR transfer request clear	DTFRRQC2	$0000\ 0000_H$	32	$FFFF\ 84B8_H$	0	32	√	√	√	√	√	√	√	√	√
DMASS	DMAC source address	DSA3	$0000\ 0000_H$	32	$FFFF\ 84C0_H$	0	32	√	√	√	√	√	√	√	√	√
DMASS	DMAC destination address	DDA3	$0000\ 0000_H$	32	$FFFF\ 84C4_H$	0	32	√	√	√	√	√	√	√	√	√
DMASS	DMAC transfer count	DTC3	$0000\ 0000_H$	32	$FFFF\ 84C8_H$	0	32	√	√	√	√	√	√	√	√	√
DMASS	DMAC transfer control	DTCT3	$0000\ 0000_H$	32	$FFFF\ 84CC_H$	0	32	√	√	√	√	√	√	√	√	√
DMASS	DMAC reload source address	DRSA3	$0000\ 0000_H$	32	$FFFF\ 84D0_H$	0	32	√	√	√	√	√	√	√	√	√
DMASS	DMAC reload destination address	DRDA3	$0000\ 0000_H$	32	$FFFF\ 84D4_H$	0	32	√	√	√	√	√	√	√	√	√
DMASS	DMAC reload transfer count	DRTC3	$0000\ 0000_H$	32	$FFFF\ 84D8_H$	0	32	√	√	√	√	√	√	√	√	√
DMASS	DMAC transfer count compare	DTCC3	$0000\ 0000_H$	32	$FFFF\ 84DC_H$	0	32	√	√	√	√	√	√	√	√	√
DMASS	DMAC channel operation enable setting	DCEN3	$0000\ 0000_H$	32	$FFFF\ 84E0_H$	0	32	√	√	√	√	√	√	√	√	√
DMASS	DMAC transfer status	DCST3	$0000\ 0000_H$	32	$FFFF\ 84E4_H$	0	32	√	√	√	√	√	√	√	√	√
DMASS	DMAC transfer status set	DCSTS3	$0000\ 0000_H$	32	$FFFF\ 84E8_H$	0	32	√	√	√	√	√	√	√	√	√
DMASS	DMAC transfer status clear	DCSTC3	$0000\ 0000_H$	32	$FFFF\ 84EC_H$	0	32	√	√	√	√	√	√	√	√	√
DMASS	DTFR setting	DTFR3	$0000\ 0000_H$	32	$FFFF\ 84F0_H$	0	32	√	√	√	√	√	√	√	√	√
DMASS	DTFR transfer request status	DTFRRQ3	$0000\ 0000_H$	32	$FFFF\ 84F4_H$	0	32	√	√	√	√	√	√	√	√	√
DMASS	DTFR transfer request clear	DTFRRQC3	$0000\ 0000_H$	32	$FFFF\ 84F8_H$	0	32	√	√	√	√	√	√	√	√	√
DMASS	DMAC source address	DSA4	$0000\ 0000_H$	32	$FFFF\ 8500_H$	0	32	√	√	√	√	√	√	√	√	√
DMASS	DMAC destination address	DDA4	$0000\ 0000_H$	32	$FFFF\ 8504_H$	0	32	√	√	√	√	√	√	√	√	√
DMASS	DMAC transfer count	DTC4	$0000\ 0000_H$	32	$FFFF\ 8508_H$	0	32	√	√	√	√	√	√	√	√	√
DMASS	DMAC transfer control	DTCT4	$0000\ 0000_H$	32	$FFFF\ 850C_H$	0	32	√	√	√	√	√	√	√	√	√
DMASS	DMAC reload source address	DRSA4	$0000\ 0000_H$	32	$FFFF\ 8510_H$	0	32	√	√	√	√	√	√	√	√	√
DMASS	DMAC reload destination address	DRDA4	$0000\ 0000_H$	32	$FFFF\ 8514_H$	0	32	√	√	√	√	√	√	√	√	√
DMASS	DMAC reload transfer count	DRTC4	$0000\ 0000_H$	32	$FFFF\ 8518_H$	0	32	√	√	√	√	√	√	√	√	√
DMASS	DMAC transfer count compare	DTCC4	$0000\ 0000_H$	32	$FFFF\ 851C_H$	0	32	√	√	√	√	√	√	√	√	√
DMASS	DMAC channel operation enable setting	DCEN4	$0000\ 0000_H$	32	$FFFF\ 8520_H$	0	32	√	√	√	√	√	√	√	√	√
DMASS	DMAC transfer status	DCST4	$0000\ 0000_H$	32	$FFFF\ 8524_H$	0	32	√	√	√	√	√	√	√	√	√
DMASS	DMAC transfer status set	DCSTS4	$0000\ 0000_H$	32	$FFFF\ 8528_H$	0	32	√	√	√	√	√	√	√	√	√
DMASS	DMAC transfer status clear	DCSTC4	$0000\ 0000_H$	32	$FFFF\ 852C_H$	0	32	√	√	√	√	√	√	√	√	√
DMASS	DTFR setting	DTFR4	$0000\ 0000_H$	32	$FFFF\ 8530_H$	0	32	√	√	√	√	√	√	√	√	√
DMASS	DTFR transfer request status	DTFRRQ4	$0000\ 0000_H$	32	$FFFF\ 8534_H$	0	32	√	√	√	√	√	√	√	√	√
DMASS	DTFR transfer request clear	DTFRRQC4	$0000\ 0000_H$	32	$FFFF\ 8538_H$	0	32	√	√	√	√	√	√	√	√	√
DMASS	DMAC source address	DSA5	$0000\ 0000_H$	32	$FFFF\ 8540_H$	0	32	√	√	√	√	√	√	√	√	√
DMASS	DMAC destination address	DDA5	$0000\ 0000_H$	32	$FFFF\ 8544_H$	0	32	√	√	√	√	√	√	√	√	√
DMASS	DMAC transfer count	DTC5	$0000\ 0000_H$	32	$FFFF\ 8548_H$	0	32	√	√	√	√	√	√	√	√	√
DMASS	DMAC transfer control	DTCT5	$0000\ 0000_H$	32	$FFFF\ 854C_H$	0	32	√	√	√	√	√	√	√	√	√
DMASS	DMAC reload source address	DRSA5	$0000\ 0000_H$	32	$FFFF\ 8550_H$	0	32	√	√	√	√	√	√	√	√	√
DMASS	DMAC reload destination address	DRDA5	$0000\ 0000_H$	32	$FFFF\ 8554_H$	0	32	√	√	√	√	√	√	√	√	√
DMASS	DMAC reload transfer count	DRTC5	$0000\ 0000_H$	32	$FFFF\ 8558_H$	0	32	√	√	√	√	√	√	√	√	√
DMASS	DMAC transfer count compare	DTCC5	$0000\ 0000_H$	32	$FFFF\ 855C_H$	0	32	√	√	√	√	√	√	√	√	√
DMASS	DMAC channel operation enable setting	DCEN5	$0000\ 0000_H$	32	$FFFF\ 8560_H$	0	32	√	√	√	√	√	√	√	√	√
DMASS	DMAC transfer status	DCST5	$0000\ 0000_H$	32	$FFFF\ 8564_H$	0	32	√	√	√	√	√	√	√	√	√
DMASS	DMAC transfer status set	DCSTS5	$0000\ 0000_H$	32	$FFFF\ 8568_H$	0	32	√	√	√	√	√	√	√	√	√
DMASS	DMAC transfer status clear	DCSTC5	$0000\ 0000_H$	32	$FFFF\ 856C_H$	0	32	√	√	√	√	√	√	√	√	√
DMASS	DTFR setting	DTFR5	$0000\ 0000_H$	32	$FFFF\ 8570_H$	0	32	√	√	√	√	√	√	√	√	√

Table A.1 List of Registers (79/124)

Module	Register	Symbol	Value after Reset	Number of Bits	Address	Peripheral IP group	Access Size	Reset Source*1							Access Authority*1	
								POCRES	CVMRES	EXTRES	DBRES	ECMRES	BISTRES	SWRES	SV	UM
DMASS	DTFR transfer request status	DTFRRQ5	$0000\ 0000_H$	32	$FFFF\ 8574_H$	0	32	√	√	√	√	√	√	√	√	√
DMASS	DTFR transfer request clear	DTFRRQC5	$0000\ 0000_H$	32	$FFFF\ 8578_H$	0	32	√	√	√	√	√	√	√	√	√
DMASS	DMAC source address	DSA6	$0000\ 0000_H$	32	$FFFF\ 8580_H$	0	32	√	√	√	√	√	√	√	√	√
DMASS	DMAC destination address	DDA6	$0000\ 0000_H$	32	$FFFF\ 8584_H$	0	32	√	√	√	√	√	√	√	√	√
DMASS	DMAC transfer count	DTC6	$0000\ 0000_H$	32	$FFFF\ 8588_H$	0	32	√	√	√	√	√	√	√	√	√
DMASS	DMAC transfer control	DTCT6	$0000\ 0000_H$	32	$FFFF\ 858C_H$	0	32	√	√	√	√	√	√	√	√	√
DMASS	DMAC reload source address	DRSA6	$0000\ 0000_H$	32	$FFFF\ 8590_H$	0	32	√	√	√	√	√	√	√	√	√
DMASS	DMAC reload destination address	DRDA6	$0000\ 0000_H$	32	$FFFF\ 8594_H$	0	32	√	√	√	√	√	√	√	√	√
DMASS	DMAC reload transfer count	DRTC6	$0000\ 0000_H$	32	$FFFF\ 8598_H$	0	32	√	√	√	√	√	√	√	√	√
DMASS	DMAC transfer count compare	DTCC6	$0000\ 0000_H$	32	$FFFF\ 859C_H$	0	32	√	√	√	√	√	√	√	√	√
DMASS	DMAC channel operation enable setting	DCEN6	$0000\ 0000_H$	32	$FFFF\ 85A0_H$	0	32	√	√	√	√	√	√	√	√	√
DMASS	DMAC transfer status	DCST6	$0000\ 0000_H$	32	$FFFF\ 85A4_H$	0	32	√	√	√	√	√	√	√	√	√
DMASS	DMAC transfer status set	DCSTS6	$0000\ 0000_H$	32	$FFFF\ 85A8_H$	0	32	√	√	√	√	√	√	√	√	√
DMASS	DMAC transfer status clear	DCSTC6	$0000\ 0000_H$	32	$FFFF\ 85AC_H$	0	32	√	√	√	√	√	√	√	√	√
DMASS	DTFR setting	DTFR6	$0000\ 0000_H$	32	$FFFF\ 85B0_H$	0	32	√	√	√	√	√	√	√	√	√
DMASS	DTFR transfer request status	DTFRRQ6	$0000\ 0000_H$	32	$FFFF\ 85B4_H$	0	32	√	√	√	√	√	√	√	√	√
DMASS	DTFR transfer request clear	DTFRRQC6	$0000\ 0000_H$	32	$FFFF\ 85B8_H$	0	32	√	√	√	√	√	√	√	√	√
DMASS	DMAC source address	DSA7	$0000\ 0000_H$	32	$FFFF\ 85C0_H$	0	32	√	√	√	√	√	√	√	√	√
DMASS	DMAC destination address	DDA7	$0000\ 0000_H$	32	$FFFF\ 85C4_H$	0	32	√	√	√	√	√	√	√	√	√
DMASS	DMAC transfer count	DTC7	$0000\ 0000_H$	32	$FFFF\ 85C8_H$	0	32	√	√	√	√	√	√	√	√	√
DMASS	DMAC transfer control	DTCT7	$0000\ 0000_H$	32	$FFFF\ 85CC_H$	0	32	√	√	√	√	√	√	√	√	√
DMASS	DMAC reload source address	DRSA7	$0000\ 0000_H$	32	$FFFF\ 85D0_H$	0	32	√	√	√	√	√	√	√	√	√
DMASS	DMAC reload destination address	DRDA7	$0000\ 0000_H$	32	$FFFF\ 85D4_H$	0	32	√	√	√	√	√	√	√	√	√
DMASS	DMAC reload transfer count	DRTC7	$0000\ 0000_H$	32	$FFFF\ 85D8_H$	0	32	√	√	√	√	√	√	√	√	√
DMASS	DMAC transfer count compare	DTCC7	$0000\ 0000_H$	32	$FFFF\ 85DC_H$	0	32	√	√	√	√	√	√	√	√	√
DMASS	DMAC channel operation enable setting	DCEN7	$0000\ 0000_H$	32	$FFFF\ 85E0_H$	0	32	√	√	√	√	√	√	√	√	√
DMASS	DMAC transfer status	DCST7	$0000\ 0000_H$	32	$FFFF\ 85E4_H$	0	32	√	√	√	√	√	√	√	√	√
DMASS	DMAC transfer status set	DCSTS7	$0000\ 0000_H$	32	$FFFF\ 85E8_H$	0	32	√	√	√	√	√	√	√	√	√
DMASS	DMAC transfer status clear	DCSTC7	$0000\ 0000_H$	32	$FFFF\ 85EC_H$	0	32	√	√	√	√	√	√	√	√	√
DMASS	DTFR setting	DTFR7	$0000\ 0000_H$	32	$FFFF\ 85F0_H$	0	32	√	√	√	√	√	√	√	√	√
DMASS	DTFR transfer request status	DTFRRQ7	$0000\ 0000_H$	32	$FFFF\ 85F4_H$	0	32	√	√	√	√	√	√	√	√	√
DMASS	DTFR transfer request clear	DTFRRQC7	$0000\ 0000_H$	32	$FFFF\ 85F8_H$	0	32	√	√	√	√	√	√	√	√	√
DMASS	DMAC source address	DSA8	$0000\ 0000_H$	32	$FFFF\ 8600_H$	0	32	√	√	√	√	√	√	√	√	√
DMASS	DMAC destination address	DDA8	$0000\ 0000_H$	32	$FFFF\ 8604_H$	0	32	√	√	√	√	√	√	√	√	√
DMASS	DMAC transfer count	DTC8	$0000\ 0000_H$	32	$FFFF\ 8608_H$	0	32	√	√	√	√	√	√	√	√	√
DMASS	DMAC transfer control	DTCT8	$0000\ 0000_H$	32	$FFFF\ 860C_H$	0	32	√	√	√	√	√	√	√	√	√
DMASS	DMAC reload source address	DRSA8	$0000\ 0000_H$	32	$FFFF\ 8610_H$	0	32	√	√	√	√	√	√	√	√	√
DMASS	DMAC reload destination address	DRDA8	$0000\ 0000_H$	32	$FFFF\ 8614_H$	0	32	√	√	√	√	√	√	√	√	√
DMASS	DMAC reload transfer count	DRTC8	$0000\ 0000_H$	32	$FFFF\ 8618_H$	0	32	√	√	√	√	√	√	√	√	√
DMASS	DMAC transfer count compare	DTCC8	$0000\ 0000_H$	32	$FFFF\ 861C_H$	0	32	√	√	√	√	√	√	√	√	√
DMASS	DMAC channel operation enable setting	DCEN8	$0000\ 0000_H$	32	$FFFF\ 8620_H$	0	32	√	√	√	√	√	√	√	√	√
DMASS	DMAC transfer status	DCST8	$0000\ 0000_H$	32	$FFFF\ 8624_H$	0	32	√	√	√	√	√	√	√	√	√
DMASS	DMAC transfer status set	DCSTS8	$0000\ 0000_H$	32	$FFFF\ 8628_H$	0	32	√	√	√	√	√	√	√	√	√
DMASS	DMAC transfer status clear	DCSTC8	$0000\ 0000_H$	32	$FFFF\ 862C_H$	0	32	√	√	√	√	√	√	√	√	√
DMASS	DTFR setting	DTFR8	$0000\ 0000_H$	32	$FFFF\ 8630_H$	0	32	√	√	√	√	√	√	√	√	√
DMASS	DTFR transfer request status	DTFRRQ8	$0000\ 0000_H$	32	$FFFF\ 8634_H$	0	32	√	√	√	√	√	√	√	√	√
DMASS	DTFR transfer request clear	DTFRRQC8	$0000\ 0000_H$	32	$FFFF\ 8638_H$	0	32	√	√	√	√	√	√	√	√	√
DMASS	DMAC source address	DSA9	$0000\ 0000_H$	32	$FFFF\ 8640_H$	0	32	√	√	√	√	√	√	√	√	√
DMASS	DMAC destination address	DDA9	$0000\ 0000_H$	32	$FFFF\ 8644_H$	0	32	√	√	√	√	√	√	√	√	√
DMASS	DMAC transfer count	DTC9	$0000\ 0000_H$	32	$FFFF\ 8648_H$	0	32	√	√	√	√	√	√	√	√	√
DMASS	DMAC transfer control	DTCT9	$0000\ 0000_H$	32	$FFFF\ 864C_H$	0	32	√	√	√	√	√	√	√	√	√
DMASS	DMAC reload source address	DRSA9	$0000\ 0000_H$	32	$FFFF\ 8650_H$	0	32	√	√	√	√	√	√	√	√	√
DMASS	DMAC reload destination address	DRDA9	$0000\ 0000_H$	32	$FFFF\ 8654_H$	0	32	√	√	√	√	√	√	√	√	√

Table A.1 List of Registers (80/124)

Module	Register	Symbol	Value after Reset	Number of Bits	Address	Peripheral IP group	Access Size	Reset Source*1							Access Authority*1	
								POCRES	CVMRES	EXTRES	DBRES	ECMRES	BISTRES	SWRES	SV	UM
DMASS	DMAC reload transfer count	DRTC9	$0000\ 0000_H$	32	$FFFF\ 8658_H$	0	32	√	√	√	√	√	√	√	√	√
DMASS	DMAC transfer count compare	DTCC9	$0000\ 0000_H$	32	$FFFF\ 865C_H$	0	32	√	√	√	√	√	√	√	√	√
DMASS	DMAC channel operation enable setting	DCEN9	$0000\ 0000_H$	32	$FFFF\ 8660_H$	0	32	√	√	√	√	√	√	√	√	√
DMASS	DMAC transfer status	DCST9	$0000\ 0000_H$	32	$FFFF\ 8664_H$	0	32	√	√	√	√	√	√	√	√	√
DMASS	DMAC transfer status set	DCSTS9	$0000\ 0000_H$	32	$FFFF\ 8668_H$	0	32	√	√	√	√	√	√	√	√	√
DMASS	DMAC transfer status clear	DCSTC9	$0000\ 0000_H$	32	$FFFF\ 866C_H$	0	32	√	√	√	√	√	√	√	√	√
DMASS	DTFR setting	DTFR9	$0000\ 0000_H$	32	$FFFF\ 8670_H$	0	32	√	√	√	√	√	√	√	√	√
DMASS	DTFR transfer request status	DTFRRQ9	$0000\ 0000_H$	32	$FFFF\ 8674_H$	0	32	√	√	√	√	√	√	√	√	√
DMASS	DTFR transfer request clear	DTFRRQC9	$0000\ 0000_H$	32	$FFFF\ 8678_H$	0	32	√	√	√	√	√	√	√	√	√
DMASS	DMAC source address	DSA10	$0000\ 0000_H$	32	$FFFF\ 8680_H$	0	32	√	√	√	√	√	√	√	√	√
DMASS	DMAC destination address	DDA10	$0000\ 0000_H$	32	$FFFF\ 8684_H$	0	32	√	√	√	√	√	√	√	√	√
DMASS	DMAC transfer count	DTC10	$0000\ 0000_H$	32	$FFFF\ 8688_H$	0	32	√	√	√	√	√	√	√	√	√
DMASS	DMAC transfer control	DTCT10	$0000\ 0000_H$	32	$FFFF\ 868C_H$	0	32	√	√	√	√	√	√	√	√	√
DMASS	DMAC reload source address	DRSA10	$0000\ 0000_H$	32	$FFFF\ 8690_H$	0	32	√	√	√	√	√	√	√	√	√
DMASS	DMAC reload destination address	DRDA10	$0000\ 0000_H$	32	$FFFF\ 8694_H$	0	32	√	√	√	√	√	√	√	√	√
DMASS	DMAC reload transfer count	DRTC10	$0000\ 0000_H$	32	$FFFF\ 8698_H$	0	32	√	√	√	√	√	√	√	√	√
DMASS	DMAC transfer count compare	DTCC10	$0000\ 0000_H$	32	$FFFF\ 869C_H$	0	32	√	√	√	√	√	√	√	√	√
DMASS	DMAC channel operation enable setting	DCEN10	$0000\ 0000_H$	32	$FFFF\ 86A0_H$	0	32	√	√	√	√	√	√	√	√	√
DMASS	DMAC transfer status	DCST10	$0000\ 0000_H$	32	$FFFF\ 86A4_H$	0	32	√	√	√	√	√	√	√	√	√
DMASS	DMAC transfer status set	DCSTS10	$0000\ 0000_H$	32	$FFFF\ 86A8_H$	0	32	√	√	√	√	√	√	√	√	√
DMASS	DMAC transfer status clear	DCSTC10	$0000\ 0000_H$	32	$FFFF\ 86AC_H$	0	32	√	√	√	√	√	√	√	√	√
DMASS	DTFR setting	DTFR10	$0000\ 0000_H$	32	$FFFF\ 86B0_H$	0	32	√	√	√	√	√	√	√	√	√
DMASS	DTFR transfer request status	DTFRRQ10	$0000\ 0000_H$	32	$FFFF\ 86B4_H$	0	32	√	√	√	√	√	√	√	√	√
DMASS	DTFR transfer request clear	DTFRRQC10	$0000\ 0000_H$	32	$FFFF\ 86B8_H$	0	32	√	√	√	√	√	√	√	√	√
DMASS	DMAC source address	DSA11	$0000\ 0000_H$	32	$FFFF\ 86C0_H$	0	32	√	√	√	√	√	√	√	√	√
DMASS	DMAC destination address	DDA11	$0000\ 0000_H$	32	$FFFF\ 86C4_H$	0	32	√	√	√	√	√	√	√	√	√
DMASS	DMAC transfer count	DTC11	$0000\ 0000_H$	32	$FFFF\ 86C8_H$	0	32	√	√	√	√	√	√	√	√	√
DMASS	DMAC transfer control	DTCT11	$0000\ 0000_H$	32	$FFFF\ 86CC_H$	0	32	√	√	√	√	√	√	√	√	√
DMASS	DMAC reload source address	DRSA11	$0000\ 0000_H$	32	$FFFF\ 86D0_H$	0	32	√	√	√	√	√	√	√	√	√
DMASS	DMAC reload destination address	DRDA11	$0000\ 0000_H$	32	$FFFF\ 86D4_H$	0	32	√	√	√	√	√	√	√	√	√
DMASS	DMAC reload transfer count	DRTC11	$0000\ 0000_H$	32	$FFFF\ 86D8_H$	0	32	√	√	√	√	√	√	√	√	√
DMASS	DMAC transfer count compare	DTCC11	$0000\ 0000_H$	32	$FFFF\ 86DC_H$	0	32	√	√	√	√	√	√	√	√	√
DMASS	DMAC channel operation enable setting	DCEN11	$0000\ 0000_H$	32	$FFFF\ 86E0_H$	0	32	√	√	√	√	√	√	√	√	√
DMASS	DMAC transfer status	DCST11	$0000\ 0000_H$	32	$FFFF\ 86E4_H$	0	32	√	√	√	√	√	√	√	√	√
DMASS	DMAC transfer status set	DCSTS11	$0000\ 0000_H$	32	$FFFF\ 86E8_H$	0	32	√	√	√	√	√	√	√	√	√
DMASS	DMAC transfer status clear	DCSTC11	$0000\ 0000_H$	32	$FFFF\ 86EC_H$	0	32	√	√	√	√	√	√	√	√	√
DMASS	DTFR setting	DTFR11	$0000\ 0000_H$	32	$FFFF\ 86F0_H$	0	32	√	√	√	√	√	√	√	√	√
DMASS	DTFR transfer request status	DTFRRQ11	$0000\ 0000_H$	32	$FFFF\ 86F4_H$	0	32	√	√	√	√	√	√	√	√	√
DMASS	DTFR transfer request clear	DTFRRQC11	$0000\ 0000_H$	32	$FFFF\ 86F8_H$	0	32	√	√	√	√	√	√	√	√	√
DMASS	DMAC source address	DSA12	$0000\ 0000_H$	32	$FFFF\ 8700_H$	0	32	√	√	√	√	√	√	√	√	√
DMASS	DMAC destination address	DDA12	$0000\ 0000_H$	32	$FFFF\ 8704_H$	0	32	√	√	√	√	√	√	√	√	√
DMASS	DMAC transfer count	DTC12	$0000\ 0000_H$	32	$FFFF\ 8708_H$	0	32	√	√	√	√	√	√	√	√	√
DMASS	DMAC transfer control	DTCT12	$0000\ 0000_H$	32	$FFFF\ 870C_H$	0	32	√	√	√	√	√	√	√	√	√
DMASS	DMAC reload source address	DRSA12	$0000\ 0000_H$	32	$FFFF\ 8710_H$	0	32	√	√	√	√	√	√	√	√	√
DMASS	DMAC reload destination address	DRDA12	$0000\ 0000_H$	32	$FFFF\ 8714_H$	0	32	√	√	√	√	√	√	√	√	√
DMASS	DMAC reload transfer count	DRTC12	$0000\ 0000_H$	32	$FFFF\ 8718_H$	0	32	√	√	√	√	√	√	√	√	√
DMASS	DMAC transfer count compare	DTCC12	$0000\ 0000_H$	32	$FFFF\ 871C_H$	0	32	√	√	√	√	√	√	√	√	√
DMASS	DMAC channel operation enable setting	DCEN12	$0000\ 0000_H$	32	$FFFF\ 8720_H$	0	32	√	√	√	√	√	√	√	√	√
DMASS	DMAC transfer status	DCST12	$0000\ 0000_H$	32	$FFFF\ 8724_H$	0	32	√	√	√	√	√	√	√	√	√
DMASS	DMAC transfer status set	DCSTS12	$0000\ 0000_H$	32	$FFFF\ 8728_H$	0	32	√	√	√	√	√	√	√	√	√
DMASS	DMAC transfer status clear	DCSTC12	$0000\ 0000_H$	32	$FFFF\ 872C_H$	0	32	√	√	√	√	√	√	√	√	√
DMASS	DTFR setting	DTFR12	$0000\ 0000_H$	32	$FFFF\ 8730_H$	0	32	√	√	√	√	√	√	√	√	√
DMASS	DTFR transfer request status	DTFRRQ12	$0000\ 0000_H$	32	$FFFF\ 8734_H$	0	32	√	√	√	√	√	√	√	√	√

Table A.1 List of Registers (81/124)

Module	Register	Symbol	Value after Reset	Number of Bits	Address	Peripheral IP group	Access Size	Reset Source*1							Access Authority*1	
								POCRES	CVMRES	EXTRES	DBRES	ECMRES	BISTRES	SWRES	SV	UM
DMASS	DTFR transfer request clear	DTFRRQC12	$0000\ 0000_H$	32	$FFFF\ 8738_H$	0	32	√	√	√	√	√	√	√	√	√
DMASS	DMAC source address	DSA13	$0000\ 0000_H$	32	$FFFF\ 8740_H$	0	32	√	√	√	√	√	√	√	√	√
DMASS	DMAC destination address	DDA13	$0000\ 0000_H$	32	$FFFF\ 8744_H$	0	32	√	√	√	√	√	√	√	√	√
DMASS	DMAC transfer count	DTC13	$0000\ 0000_H$	32	$FFFF\ 8748_H$	0	32	√	√	√	√	√	√	√	√	√
DMASS	DMAC transfer control	DTCT13	$0000\ 0000_H$	32	$FFFF\ 874C_H$	0	32	√	√	√	√	√	√	√	√	√
DMASS	DMAC reload source address	DRSA13	$0000\ 0000_H$	32	$FFFF\ 8750_H$	0	32	√	√	√	√	√	√	√	√	√
DMASS	DMAC reload destination address	DRDA13	$0000\ 0000_H$	32	$FFFF\ 8754_H$	0	32	√	√	√	√	√	√	√	√	√
DMASS	DMAC reload transfer count	DRTC13	$0000\ 0000_H$	32	$FFFF\ 8758_H$	0	32	√	√	√	√	√	√	√	√	√
DMASS	DMAC transfer count compare	DTCC13	$0000\ 0000_H$	32	$FFFF\ 875C_H$	0	32	√	√	√	√	√	√	√	√	√
DMASS	DMAC channel operation enable setting	DCEN13	$0000\ 0000_H$	32	$FFFF\ 8760_H$	0	32	√	√	√	√	√	√	√	√	√
DMASS	DMAC transfer status	DCST13	$0000\ 0000_H$	32	$FFFF\ 8764_H$	0	32	√	√	√	√	√	√	√	√	√
DMASS	DMAC transfer status set	DCSTS13	$0000\ 0000_H$	32	$FFFF\ 8768_H$	0	32	√	√	√	√	√	√	√	√	√
DMASS	DMAC transfer status clear	DCSTC13	$0000\ 0000_H$	32	$FFFF\ 876C_H$	0	32	√	√	√	√	√	√	√	√	√
DMASS	DTFR setting	DTFR13	$0000\ 0000_H$	32	$FFFF\ 8770_H$	0	32	√	√	√	√	√	√	√	√	√
DMASS	DTFR transfer request status	DTFRRQ13	$0000\ 0000_H$	32	$FFFF\ 8774_H$	0	32	√	√	√	√	√	√	√	√	√
DMASS	DTFR transfer request clear	DTFRRQC13	$0000\ 0000_H$	32	$FFFF\ 8778_H$	0	32	√	√	√	√	√	√	√	√	√
DMASS	DMAC source address	DSA14	$0000\ 0000_H$	32	$FFFF\ 8780_H$	0	32	√	√	√	√	√	√	√	√	√
DMASS	DMAC destination address	DDA14	$0000\ 0000_H$	32	$FFFF\ 8784_H$	0	32	√	√	√	√	√	√	√	√	√
DMASS	DMAC transfer count	DTC14	$0000\ 0000_H$	32	$FFFF\ 8788_H$	0	32	√	√	√	√	√	√	√	√	√
DMASS	DMAC transfer control	DTCT14	$0000\ 0000_H$	32	$FFFF\ 878C_H$	0	32	√	√	√	√	√	√	√	√	√
DMASS	DMAC reload source address	DRSA14	$0000\ 0000_H$	32	$FFFF\ 8790_H$	0	32	√	√	√	√	√	√	√	√	√
DMASS	DMAC reload destination address	DRDA14	$0000\ 0000_H$	32	$FFFF\ 8794_H$	0	32	√	√	√	√	√	√	√	√	√
DMASS	DMAC reload transfer count	DRTC14	$0000\ 0000_H$	32	$FFFF\ 8798_H$	0	32	√	√	√	√	√	√	√	√	√
DMASS	DMAC transfer count compare	DTCC14	$0000\ 0000_H$	32	$FFFF\ 879C_H$	0	32	√	√	√	√	√	√	√	√	√
DMASS	DMAC channel operation enable setting	DCEN14	$0000\ 0000_H$	32	$FFFF\ 87A0_H$	0	32	√	√	√	√	√	√	√	√	√
DMASS	DMAC transfer status	DCST14	$0000\ 0000_H$	32	$FFFF\ 87A4_H$	0	32	√	√	√	√	√	√	√	√	√
DMASS	DMAC transfer status set	DCSTS14	$0000\ 0000_H$	32	$FFFF\ 87A8_H$	0	32	√	√	√	√	√	√	√	√	√
DMASS	DMAC transfer status clear	DCSTC14	$0000\ 0000_H$	32	$FFFF\ 87AC_H$	0	32	√	√	√	√	√	√	√	√	√
DMASS	DTFR setting	DTFR14	$0000\ 0000_H$	32	$FFFF\ 87B0_H$	0	32	√	√	√	√	√	√	√	√	√
DMASS	DTFR transfer request status	DTFRRQ14	$0000\ 0000_H$	32	$FFFF\ 87B4_H$	0	32	√	√	√	√	√	√	√	√	√
DMASS	DTFR transfer request clear	DTFRRQC14	$0000\ 0000_H$	32	$FFFF\ 87B8_H$	0	32	√	√	√	√	√	√	√	√	√
DMASS	DMAC source address	DSA15	$0000\ 0000_H$	32	$FFFF\ 87C0_H$	0	32	√	√	√	√	√	√	√	√	√
DMASS	DMAC destination address	DDA15	$0000\ 0000_H$	32	$FFFF\ 87C4_H$	0	32	√	√	√	√	√	√	√	√	√
DMASS	DMAC transfer count	DTC15	$0000\ 0000_H$	32	$FFFF\ 87C8_H$	0	32	√	√	√	√	√	√	√	√	√
DMASS	DMAC transfer control	DTCT15	$0000\ 0000_H$	32	$FFFF\ 87CC_H$	0	32	√	√	√	√	√	√	√	√	√
DMASS	DMAC reload source address	DRSA15	$0000\ 0000_H$	32	$FFFF\ 87D0_H$	0	32	√	√	√	√	√	√	√	√	√
DMASS	DMAC reload destination address	DRDA15	$0000\ 0000_H$	32	$FFFF\ 87D4_H$	0	32	√	√	√	√	√	√	√	√	√
DMASS	DMAC reload transfer count	DRTC15	$0000\ 0000_H$	32	$FFFF\ 87D8_H$	0	32	√	√	√	√	√	√	√	√	√
DMASS	DMAC transfer count compare	DTCC15	$0000\ 0000_H$	32	$FFFF\ 87DC_H$	0	32	√	√	√	√	√	√	√	√	√
DMASS	DMAC channel operation enable setting	DCEN15	$0000\ 0000_H$	32	$FFFF\ 87E0_H$	0	32	√	√	√	√	√	√	√	√	√
DMASS	DMAC transfer status	DCST15	$0000\ 0000_H$	32	$FFFF\ 87E4_H$	0	32	√	√	√	√	√	√	√	√	√
DMASS	DMAC transfer status set	DCSTS15	$0000\ 0000_H$	32	$FFFF\ 87E8_H$	0	32	√	√	√	√	√	√	√	√	√
DMASS	DMAC transfer status clear	DCSTC15	$0000\ 0000_H$	32	$FFFF\ 87EC_H$	0	32	√	√	√	√	√	√	√	√	√
DMASS	DTFR setting	DTFR15	$0000\ 0000_H$	32	$FFFF\ 87F0_H$	0	32	√	√	√	√	√	√	√	√	√
DMASS	DTFR transfer request status	DTFRRQ15	$0000\ 0000_H$	32	$FFFF\ 87F4_H$	0	32	√	√	√	√	√	√	√	√	√
DMASS	DTFR transfer request clear	DTFRRQC15	$0000\ 0000_H$	32	$FFFF\ 87F8_H$	0	32	√	√	√	√	√	√	√	√	√
DMASS	DTS source address	DTSA000	Undefined	32	$FFFF\ 9000_H$	0	32	√	√	√	√	√	√	√	√	√
DMASS	DTS destination address	DTDA000	Undefined	32	$FFFF\ 9004_H$	0	32	√	√	√	√	√	√	√	√	√
DMASS	DTS transfer count	DTTC000	Undefined	32	$FFFF\ 9008_H$	0	32	√	√	√	√	√	√	√	√	√
DMASS	DTS transfer control	DTTCT000	Undefined	32	$FFFF\ 900C_H$	0	32	√	√	√	√	√	√	√	√	√
DMASS	DTS reload source address	DTRSA000	Undefined	32	$FFFF\ 9010_H$	0	32	√	√	√	√	√	√	√	√	√
DMASS	DTS reload destination address	DTRDA000	Undefined	32	$FFFF\ 9014_H$	0	32	√	√	√	√	√	√	√	√	√
DMASS	DTS reload transfer count	DTRTC000	Undefined	32	$FFFF\ 9018_H$	0	32	√	√	√	√	√	√	√	√	√

Table A.1 List of Registers (82/124)

Module	Register	Symbol	Value after Reset	Number of Bits	Address	Peripheral IP group	Access Size	Reset Source*1							Access Authority*1	
								POCRES	CVMRES	EXTRES	DBRES	ECMRES	BISTRES	SWRES	SV	UM
DMASS	DTS transfer count compare	DTTCC000	Undefined	32	FFFF 901C$_H$	0	32	√	√	√	√	√	√	√	√	√
DMASS	DTSFSL operation setting	DTFSL000	0000 0000$_H$	32	FFFF 9020$_H$	0	32	√	√	√	√	√	√	√	√	√
DMASS	DTSFSL transfer request status	DTFST000	0000 0000$_H$	32	FFFF 9024$_H$	0	32	√	√	√	√	√	√	√	√	√
DMASS	DTSFSL transfer request set	DTFSS000	0000 0000$_H$	32	FFFF 9028$_H$	0	32	√	√	√	√	√	√	√	√	√
DMASS	DTSFSL transfer request clear	DTFSC000	0000 0000$_H$	32	FFFF 902C$_H$	0	32	√	√	√	√	√	√	√	√	√
DMASS	DTS source address	DTSA001	Undefined	32	FFFF 9040$_H$	0	32	√	√	√	√	√	√	√	√	√
DMASS	DTS destination address	DTDA001	Undefined	32	FFFF 9044$_H$	0	32	√	√	√	√	√	√	√	√	√
DMASS	DTS transfer count	DTTC001	Undefined	32	FFFF 9048$_H$	0	32	√	√	√	√	√	√	√	√	√
DMASS	DTS transfer control	DTTCT001	Undefined	32	FFFF 904C$_H$	0	32	√	√	√	√	√	√	√	√	√
DMASS	DTS reload source address	DTRSA001	Undefined	32	FFFF 9050$_H$	0	32	√	√	√	√	√	√	√	√	√
DMASS	DTS reload destination address	DTRDA001	Undefined	32	FFFF 9054$_H$	0	32	√	√	√	√	√	√	√	√	√
DMASS	DTS reload transfer count	DTRTC001	Undefined	32	FFFF 9058$_H$	0	32	√	√	√	√	√	√	√	√	√
DMASS	DTS transfer count compare	DTTCC001	Undefined	32	FFFF 905C$_H$	0	32	√	√	√	√	√	√	√	√	√
DMASS	DTSFSL operation setting	DTFSL001	0000 0000$_H$	32	FFFF 9060$_H$	0	32	√	√	√	√	√	√	√	√	√
DMASS	DTSFSL transfer request status	DTFST001	0000 0000$_H$	32	FFFF 9064$_H$	0	32	√	√	√	√	√	√	√	√	√
DMASS	DTSFSL transfer request set	DTFSS001	0000 0000$_H$	32	FFFF 9068$_H$	0	32	√	√	√	√	√	√	√	√	√
DMASS	DTSFSL transfer request clear	DTFSC001	0000 0000$_H$	32	FFFF 906C$_H$	0	32	√	√	√	√	√	√	√	√	√
DMASS	DTS source address	DTSA002	Undefined	32	FFFF 9080$_H$	0	32	√	√	√	√	√	√	√	√	√
DMASS	DTS destination address	DTDA002	Undefined	32	FFFF 9084$_H$	0	32	√	√	√	√	√	√	√	√	√
DMASS	DTS transfer count	DTTC002	Undefined	32	FFFF 9088$_H$	0	32	√	√	√	√	√	√	√	√	√
DMASS	DTS transfer control	DTTCT002	Undefined	32	FFFF 908C$_H$	0	32	√	√	√	√	√	√	√	√	√
DMASS	DTS reload source address	DTRSA002	Undefined	32	FFFF 9090$_H$	0	32	√	√	√	√	√	√	√	√	√
DMASS	DTS reload destination address	DTRDA002	Undefined	32	FFFF 9094$_H$	0	32	√	√	√	√	√	√	√	√	√
DMASS	DTS reload transfer count	DTRTC002	Undefined	32	FFFF 9098$_H$	0	32	√	√	√	√	√	√	√	√	√
DMASS	DTS transfer count compare	DTTCC002	Undefined	32	FFFF 909C$_H$	0	32	√	√	√	√	√	√	√	√	√
DMASS	DTSFSL operation setting	DTFSL002	0000 0000$_H$	32	FFFF 90A0$_H$	0	32	√	√	√	√	√	√	√	√	√
DMASS	DTSFSL transfer request status	DTFST002	0000 0000$_H$	32	FFFF 90A4$_H$	0	32	√	√	√	√	√	√	√	√	√
DMASS	DTSFSL transfer request set	DTFSS002	0000 0000$_H$	32	FFFF 90A8$_H$	0	32	√	√	√	√	√	√	√	√	√
DMASS	DTSFSL transfer request clear	DTFSC002	0000 0000$_H$	32	FFFF 90AC$_H$	0	32	√	√	√	√	√	√	√	√	√
DMASS	DTS source address	DTSA003	Undefined	32	FFFF 90C0$_H$	0	32	√	√	√	√	√	√	√	√	√
DMASS	DTS destination address	DTDA003	Undefined	32	FFFF 90C4$_H$	0	32	√	√	√	√	√	√	√	√	√
DMASS	DTS transfer count	DTTC003	Undefined	32	FFFF 90C8$_H$	0	32	√	√	√	√	√	√	√	√	√
DMASS	DTS transfer control	DTTCT003	Undefined	32	FFFF 90CC$_H$	0	32	√	√	√	√	√	√	√	√	√
DMASS	DTS reload source address	DTRSA003	Undefined	32	FFFF 90D0$_H$	0	32	√	√	√	√	√	√	√	√	√
DMASS	DTS reload destination address	DTRDA003	Undefined	32	FFFF 90D4$_H$	0	32	√	√	√	√	√	√	√	√	√
DMASS	DTS reload transfer count	DTRTC003	Undefined	32	FFFF 90D8$_H$	0	32	√	√	√	√	√	√	√	√	√
DMASS	DTS transfer count compare	DTTCC003	Undefined	32	FFFF 90DC$_H$	0	32	√	√	√	√	√	√	√	√	√
DMASS	DTSFSL operation setting	DTFSL003	0000 0000$_H$	32	FFFF 90E0$_H$	0	32	√	√	√	√	√	√	√	√	√
DMASS	DTSFSL transfer request status	DTFST003	0000 0000$_H$	32	FFFF 90E4$_H$	0	32	√	√	√	√	√	√	√	√	√
DMASS	DTSFSL transfer request set	DTFSS003	0000 0000$_H$	32	FFFF 90E8$_H$	0	32	√	√	√	√	√	√	√	√	√
DMASS	DTSFSL transfer request clear	DTFSC003	0000 0000$_H$	32	FFFF 90EC$_H$	0	32	√	√	√	√	√	√	√	√	√
DMASS	DTS source address	DTSA004	Undefined	32	FFFF 9100$_H$	0	32	√	√	√	√	√	√	√	√	√
DMASS	DTS destination address	DTDA004	Undefined	32	FFFF 9104$_H$	0	32	√	√	√	√	√	√	√	√	√
DMASS	DTS transfer count	DTTC004	Undefined	32	FFFF 9108$_H$	0	32	√	√	√	√	√	√	√	√	√
DMASS	DTS transfer control	DTTCT004	Undefined	32	FFFF 910C$_H$	0	32	√	√	√	√	√	√	√	√	√
DMASS	DTS reload source address	DTRSA004	Undefined	32	FFFF 9110$_H$	0	32	√	√	√	√	√	√	√	√	√
DMASS	DTS reload destination address	DTRDA004	Undefined	32	FFFF 9114$_H$	0	32	√	√	√	√	√	√	√	√	√
DMASS	DTS reload transfer count	DTRTC004	Undefined	32	FFFF 9118$_H$	0	32	√	√	√	√	√	√	√	√	√
DMASS	DTS transfer count compare	DTTCC004	Undefined	32	FFFF 911C$_H$	0	32	√	√	√	√	√	√	√	√	√
DMASS	DTSFSL operation setting	DTFSL004	0000 0000$_H$	32	FFFF 9120$_H$	0	32	√	√	√	√	√	√	√	√	√
DMASS	DTSFSL transfer request status	DTFST004	0000 0000$_H$	32	FFFF 9124$_H$	0	32	√	√	√	√	√	√	√	√	√
DMASS	DTSFSL transfer request set	DTFSS004	0000 0000$_H$	32	FFFF 9128$_H$	0	32	√	√	√	√	√	√	√	√	√
DMASS	DTSFSL transfer request clear	DTFSC004	0000 0000$_H$	32	FFFF 912C$_H$	0	32	√	√	√	√	√	√	√	√	√

Table A.1 List of Registers (83/124)

Module	Register	Symbol	Value after Reset	Number of Bits	Address	Peripheral IP group	Access Size	Reset Source*1							Access Authority*1	
								POCRES	CVMRES	EXTRES	DBRES	ECMRES	BISTRES	SWRES	SV	UM
DMASS	DTS source address	DTSA005	Undefined	32	FFFF 9140$_H$	0	32	√	√	√	√	√	√	√	√	√
DMASS	DTS destination address	DTDA005	Undefined	32	FFFF 9144$_H$	0	32	√	√	√	√	√	√	√	√	√
DMASS	DTS transfer count	DTTC005	Undefined	32	FFFF 9148$_H$	0	32	√	√	√	√	√	√	√	√	√
DMASS	DTS transfer control	DTTCT005	Undefined	32	FFFF 914C$_H$	0	32	√	√	√	√	√	√	√	√	√
DMASS	DTS reload source address	DTRSA005	Undefined	32	FFFF 9150$_H$	0	32	√	√	√	√	√	√	√	√	√
DMASS	DTS reload destination address	DTRDA005	Undefined	32	FFFF 9154$_H$	0	32	√	√	√	√	√	√	√	√	√
DMASS	DTS reload transfer count	DTRTC005	Undefined	32	FFFF 9158$_H$	0	32	√	√	√	√	√	√	√	√	√
DMASS	DTS transfer count compare	DTTCC005	Undefined	32	FFFF 915C$_H$	0	32	√	√	√	√	√	√	√	√	√
DMASS	DTSFSL operation setting	DTFSL005	0000 0000$_H$	32	FFFF 9160$_H$	0	32	√	√	√	√	√	√	√	√	√
DMASS	DTSFSL transfer request status	DTFST005	0000 0000$_H$	32	FFFF 9164$_H$	0	32	√	√	√	√	√	√	√	√	√
DMASS	DTSFSL transfer request set	DTFSS005	0000 0000$_H$	32	FFFF 9168$_H$	0	32	√	√	√	√	√	√	√	√	√
DMASS	DTSFSL transfer request clear	DTFSC005	0000 0000$_H$	32	FFFF 916C$_H$	0	32	√	√	√	√	√	√	√	√	√
DMASS	DTS source address	DTSA006	Undefined	32	FFFF 9180$_H$	0	32	√	√	√	√	√	√	√	√	√
DMASS	DTS destination address	DTDA006	Undefined	32	FFFF 9184$_H$	0	32	√	√	√	√	√	√	√	√	√
DMASS	DTS transfer count	DTTC006	Undefined	32	FFFF 9188$_H$	0	32	√	√	√	√	√	√	√	√	√
DMASS	DTS transfer control	DTTCT006	Undefined	32	FFFF 918C$_H$	0	32	√	√	√	√	√	√	√	√	√
DMASS	DTS reload source address	DTRSA006	Undefined	32	FFFF 9190$_H$	0	32	√	√	√	√	√	√	√	√	√
DMASS	DTS reload destination address	DTRDA006	Undefined	32	FFFF 9194$_H$	0	32	√	√	√	√	√	√	√	√	√
DMASS	DTS reload transfer count	DTRTC006	Undefined	32	FFFF 9198$_H$	0	32	√	√	√	√	√	√	√	√	√
DMASS	DTS transfer count compare	DTTCC006	Undefined	32	FFFF 919C$_H$	0	32	√	√	√	√	√	√	√	√	√
DMASS	DTSFSL operation setting	DTFSL006	0000 0000$_H$	32	FFFF 91A0$_H$	0	32	√	√	√	√	√	√	√	√	√
DMASS	DTSFSL transfer request status	DTFST006	0000 0000$_H$	32	FFFF 91A4$_H$	0	32	√	√	√	√	√	√	√	√	√
DMASS	DTSFSL transfer request set	DTFSS006	0000 0000$_H$	32	FFFF 91A8$_H$	0	32	√	√	√	√	√	√	√	√	√
DMASS	DTSFSL transfer request clear	DTFSC006	0000 0000$_H$	32	FFFF 91AC$_H$	0	32	√	√	√	√	√	√	√	√	√
DMASS	DTS source address	DTSA007	Undefined	32	FFFF 91C0$_H$	0	32	√	√	√	√	√	√	√	√	√
DMASS	DTS destination address	DTDA007	Undefined	32	FFFF 91C4$_H$	0	32	√	√	√	√	√	√	√	√	√
DMASS	DTS transfer count	DTTC007	Undefined	32	FFFF 91C8$_H$	0	32	√	√	√	√	√	√	√	√	√
DMASS	DTS transfer control	DTTCT007	Undefined	32	FFFF 91CC$_H$	0	32	√	√	√	√	√	√	√	√	√
DMASS	DTS reload source address	DTRSA007	Undefined	32	FFFF 91D0$_H$	0	32	√	√	√	√	√	√	√	√	√
DMASS	DTS reload destination address	DTRDA007	Undefined	32	FFFF 91D4$_H$	0	32	√	√	√	√	√	√	√	√	√
DMASS	DTS reload transfer count	DTRTC007	Undefined	32	FFFF 91D8$_H$	0	32	√	√	√	√	√	√	√	√	√
DMASS	DTS transfer count compare	DTTCC007	Undefined	32	FFFF 91DC$_H$	0	32	√	√	√	√	√	√	√	√	√
DMASS	DTSFSL operation setting	DTFSL007	0000 0000$_H$	32	FFFF 91E0$_H$	0	32	√	√	√	√	√	√	√	√	√
DMASS	DTSFSL transfer request status	DTFST007	0000 0000$_H$	32	FFFF 91E4$_H$	0	32	√	√	√	√	√	√	√	√	√
DMASS	DTSFSL transfer request set	DTFSS007	0000 0000$_H$	32	FFFF 91E8$_H$	0	32	√	√	√	√	√	√	√	√	√
DMASS	DTSFSL transfer request clear	DTFSC007	0000 0000$_H$	32	FFFF 91EC$_H$	0	32	√	√	√	√	√	√	√	√	√
DMASS	DTS source address	DTSA008	Undefined	32	FFFF 9200$_H$	0	32	√	√	√	√	√	√	√	√	√
DMASS	DTS destination address	DTDA008	Undefined	32	FFFF 9204$_H$	0	32	√	√	√	√	√	√	√	√	√
DMASS	DTS transfer count	DTTC008	Undefined	32	FFFF 9208$_H$	0	32	√	√	√	√	√	√	√	√	√
DMASS	DTS transfer control	DTTCT008	Undefined	32	FFFF 920C$_H$	0	32	√	√	√	√	√	√	√	√	√
DMASS	DTS reload source address	DTRSA008	Undefined	32	FFFF 9210$_H$	0	32	√	√	√	√	√	√	√	√	√
DMASS	DTS reload destination address	DTRDA008	Undefined	32	FFFF 9214$_H$	0	32	√	√	√	√	√	√	√	√	√
DMASS	DTS reload transfer count	DTRTC008	Undefined	32	FFFF 9218$_H$	0	32	√	√	√	√	√	√	√	√	√
DMASS	DTS transfer count compare	DTTCC008	Undefined	32	FFFF 921C$_H$	0	32	√	√	√	√	√	√	√	√	√
DMASS	DTSFSL operation setting	DTFSL008	0000 0000$_H$	32	FFFF 9220$_H$	0	32	√	√	√	√	√	√	√	√	√
DMASS	DTSFSL transfer request status	DTFST008	0000 0000$_H$	32	FFFF 9224$_H$	0	32	√	√	√	√	√	√	√	√	√
DMASS	DTSFSL transfer request set	DTFSS008	0000 0000$_H$	32	FFFF 9228$_H$	0	32	√	√	√	√	√	√	√	√	√
DMASS	DTSFSL transfer request clear	DTFSC008	0000 0000$_H$	32	FFFF 922C$_H$	0	32	√	√	√	√	√	√	√	√	√
DMASS	DTS source address	DTSA009	Undefined	32	FFFF 9240$_H$	0	32	√	√	√	√	√	√	√	√	√
DMASS	DTS destination address	DTDA009	Undefined	32	FFFF 9244$_H$	0	32	√	√	√	√	√	√	√	√	√
DMASS	DTS transfer count	DTTC009	Undefined	32	FFFF 9248$_H$	0	32	√	√	√	√	√	√	√	√	√
DMASS	DTS transfer control	DTTCT009	Undefined	32	FFFF 924C$_H$	0	32	√	√	√	√	√	√	√	√	√
DMASS	DTS reload source address	DTRSA009	Undefined	32	FFFF 9250$_H$	0	32	√	√	√	√	√	√	√	√	√

Table A.1 List of Registers (84/124)

Module	Register	Symbol	Value after Reset	Number of Bits	Address	Peripheral IP group	Access Size	Reset Source*1							Access Authority*1	
								POCRES	CVMRES	EXTRES	DBRES	ECMRES	BISTRES	SWRES	SV	UM
DMASS	DTS reload destination address	DTRDA009	Undefined	32	FFFF 9254_H	0	32	√	√	√	√	√	√	√	√	√
DMASS	DTS reload transfer count	DTRTC009	Undefined	32	FFFF 9258_H	0	32	√	√	√	√	√	√	√	√	√
DMASS	DTS transfer count compare	DTTCC009	Undefined	32	FFFF $925C_H$	0	32	√	√	√	√	√	√	√	√	√
DMASS	DTSFSL operation setting	DTFSL009	$0000\ 0000_H$	32	FFFF 9260_H	0	32	√	√	√	√	√	√	√	√	√
DMASS	DTSFSL transfer request status	DTFST009	$0000\ 0000_H$	32	FFFF 9264_H	0	32	√	√	√	√	√	√	√	√	√
DMASS	DTSFSL transfer request set	DTFSS009	$0000\ 0000_H$	32	FFFF 9268_H	0	32	√	√	√	√	√	√	√	√	√
DMASS	DTSFSL transfer request clear	DTFSC009	$0000\ 0000_H$	32	FFFF $926C_H$	0	32	√	√	√	√	√	√	√	√	√
DMASS	DTS source address	DTSA010	Undefined	32	FFFF 9280_H	0	32	√	√	√	√	√	√	√	√	√
DMASS	DTS destination address	DTDA010	Undefined	32	FFFF 9284_H	0	32	√	√	√	√	√	√	√	√	√
DMASS	DTS transfer count	DTTC010	Undefined	32	FFFF 9288_H	0	32	√	√	√	√	√	√	√	√	√
DMASS	DTS transfer control	DTTCT010	Undefined	32	FFFF $928C_H$	0	32	√	√	√	√	√	√	√	√	√
DMASS	DTS reload source address	DTRSA010	Undefined	32	FFFF 9290_H	0	32	√	√	√	√	√	√	√	√	√
DMASS	DTS reload destination address	DTRDA010	Undefined	32	FFFF 9294_H	0	32	√	√	√	√	√	√	√	√	√
DMASS	DTS reload transfer count	DTRTC010	Undefined	32	FFFF 9298_H	0	32	√	√	√	√	√	√	√	√	√
DMASS	DTS transfer count compare	DTTCC010	Undefined	32	FFFF $929C_H$	0	32	√	√	√	√	√	√	√	√	√
DMASS	DTSFSL operation setting	DTFSL010	$0000\ 0000_H$	32	FFFF $92A0_H$	0	32	√	√	√	√	√	√	√	√	√
DMASS	DTSFSL transfer request status	DTFST010	$0000\ 0000_H$	32	FFFF $92A4_H$	0	32	√	√	√	√	√	√	√	√	√
DMASS	DTSFSL transfer request set	DTFSS010	$0000\ 0000_H$	32	FFFF $92A8_H$	0	32	√	√	√	√	√	√	√	√	√
DMASS	DTSFSL transfer request clear	DTFSC010	$0000\ 0000_H$	32	FFFF $92AC_H$	0	32	√	√	√	√	√	√	√	√	√
DMASS	DTS source address	DTSA011	Undefined	32	FFFF $92C0_H$	0	32	√	√	√	√	√	√	√	√	√
DMASS	DTS destination address	DTDA011	Undefined	32	FFFF $92C4_H$	0	32	√	√	√	√	√	√	√	√	√
DMASS	DTS transfer count	DTTC011	Undefined	32	FFFF $92C8_H$	0	32	√	√	√	√	√	√	√	√	√
DMASS	DTS transfer control	DTTCT011	Undefined	32	FFFF $92CC_H$	0	32	√	√	√	√	√	√	√	√	√
DMASS	DTS reload source address	DTRSA011	Undefined	32	FFFF $92D0_H$	0	32	√	√	√	√	√	√	√	√	√
DMASS	DTS reload destination address	DTRDA011	Undefined	32	FFFF $92D4_H$	0	32	√	√	√	√	√	√	√	√	√
DMASS	DTS reload transfer count	DTRTC011	Undefined	32	FFFF $92D8_H$	0	32	√	√	√	√	√	√	√	√	√
DMASS	DTS transfer count compare	DTTCC011	Undefined	32	FFFF $92DC_H$	0	32	√	√	√	√	√	√	√	√	√
DMASS	DTSFSL operation setting	DTFSL011	$0000\ 0000_H$	32	FFFF $92E0_H$	0	32	√	√	√	√	√	√	√	√	√
DMASS	DTSFSL transfer request status	DTFST011	$0000\ 0000_H$	32	FFFF $92E4_H$	0	32	√	√	√	√	√	√	√	√	√
DMASS	DTSFSL transfer request set	DTFSS011	$0000\ 0000_H$	32	FFFF $92E8_H$	0	32	√	√	√	√	√	√	√	√	√
DMASS	DTSFSL transfer request clear	DTFSC011	$0000\ 0000_H$	32	FFFF $92EC_H$	0	32	√	√	√	√	√	√	√	√	√
DMASS	DTS source address	DTSA012	Undefined	32	FFFF 9300_H	0	32	√	√	√	√	√	√	√	√	√
DMASS	DTS destination address	DTDA012	Undefined	32	FFFF 9304_H	0	32	√	√	√	√	√	√	√	√	√
DMASS	DTS transfer count	DTTC012	Undefined	32	FFFF 9308_H	0	32	√	√	√	√	√	√	√	√	√
DMASS	DTS transfer control	DTTCT012	Undefined	32	FFFF $930C_H$	0	32	√	√	√	√	√	√	√	√	√
DMASS	DTS reload source address	DTRSA012	Undefined	32	FFFF 9310_H	0	32	√	√	√	√	√	√	√	√	√
DMASS	DTS reload destination address	DTRDA012	Undefined	32	FFFF 9314_H	0	32	√	√	√	√	√	√	√	√	√
DMASS	DTS reload transfer count	DTRTC012	Undefined	32	FFFF 9318_H	0	32	√	√	√	√	√	√	√	√	√
DMASS	DTS transfer count compare	DTTCC012	Undefined	32	FFFF $931C_H$	0	32	√	√	√	√	√	√	√	√	√
DMASS	DTSFSL operation setting	DTFSL012	$0000\ 0000_H$	32	FFFF 9320_H	0	32	√	√	√	√	√	√	√	√	√
DMASS	DTSFSL transfer request status	DTFST012	$0000\ 0000_H$	32	FFFF 9324_H	0	32	√	√	√	√	√	√	√	√	√
DMASS	DTSFSL transfer request set	DTFSS012	$0000\ 0000_H$	32	FFFF 9328_H	0	32	√	√	√	√	√	√	√	√	√
DMASS	DTSFSL transfer request clear	DTFSC012	$0000\ 0000_H$	32	FFFF $932C_H$	0	32	√	√	√	√	√	√	√	√	√
DMASS	DTS source address	DTSA013	Undefined	32	FFFF 9340_H	0	32	√	√	√	√	√	√	√	√	√
DMASS	DTS destination address	DTDA013	Undefined	32	FFFF 9344_H	0	32	√	√	√	√	√	√	√	√	√
DMASS	DTS transfer count	DTTC013	Undefined	32	FFFF 9348_H	0	32	√	√	√	√	√	√	√	√	√
DMASS	DTS transfer control	DTTCT013	Undefined	32	FFFF $934C_H$	0	32	√	√	√	√	√	√	√	√	√
DMASS	DTS reload source address	DTRSA013	Undefined	32	FFFF 9350_H	0	32	√	√	√	√	√	√	√	√	√
DMASS	DTS reload destination address	DTRDA013	Undefined	32	FFFF 9354_H	0	32	√	√	√	√	√	√	√	√	√
DMASS	DTS reload transfer count	DTRTC013	Undefined	32	FFFF 9358_H	0	32	√	√	√	√	√	√	√	√	√
DMASS	DTS transfer count compare	DTTCC013	Undefined	32	FFFF $935C_H$	0	32	√	√	√	√	√	√	√	√	√
DMASS	DTSFSL operation setting	DTFSL013	$0000\ 0000_H$	32	FFFF 9360_H	0	32	√	√	√	√	√	√	√	√	√
DMASS	DTSFSL transfer request status	DTFST013	$0000\ 0000_H$	32	FFFF 9364_H	0	32	√	√	√	√	√	√	√	√	√

Table A.1 List of Registers (85/124)

Module	Register	Symbol	Value after Reset	Number of Bits	Address	Peripheral IP group	Access Size	Reset Source*1							Access Authority*1	
								POCRES	CVMRES	EXTRES	DBRES	ECMRES	BISTRES	SWRES	SV	UM
DMASS	DTSFSL transfer request set	DTFSS013	$0000\ 0000_H$	32	$FFFF\ 9368_H$	0	32	√	√	√	√	√	√	√	√	√
DMASS	DTSFSL transfer request clear	DTFSC013	$0000\ 0000_H$	32	$FFFF\ 936C_H$	0	32	√	√	√	√	√	√	√	√	√
DMASS	DTS source address	DTSA014	Undefined	32	$FFFF\ 9380_H$	0	32	√	√	√	√	√	√	√	√	√
DMASS	DTS destination address	DTDA014	Undefined	32	$FFFF\ 9384_H$	0	32	√	√	√	√	√	√	√	√	√
DMASS	DTS transfer count	DTTC014	Undefined	32	$FFFF\ 9388_H$	0	32	√	√	√	√	√	√	√	√	√
DMASS	DTS transfer control	DTTCT014	Undefined	32	$FFFF\ 938C_H$	0	32	√	√	√	√	√	√	√	√	√
DMASS	DTS reload source address	DTRSA014	Undefined	32	$FFFF\ 9390_H$	0	32	√	√	√	√	√	√	√	√	√
DMASS	DTS reload destination address	DTRDA014	Undefined	32	$FFFF\ 9394_H$	0	32	√	√	√	√	√	√	√	√	√
DMASS	DTS reload transfer count	DTRTC014	Undefined	32	$FFFF\ 9398_H$	0	32	√	√	√	√	√	√	√	√	√
DMASS	DTS transfer count compare	DTTCC014	Undefined	32	$FFFF\ 939C_H$	0	32	√	√	√	√	√	√	√	√	√
DMASS	DTSFSL operation setting	DTFSL014	$0000\ 0000_H$	32	$FFFF\ 93A0_H$	0	32	√	√	√	√	√	√	√	√	√
DMASS	DTSFSL transfer request status	DTFST014	$0000\ 0000_H$	32	$FFFF\ 93A4_H$	0	32	√	√	√	√	√	√	√	√	√
DMASS	DTSFSL transfer request set	DTFSS014	$0000\ 0000_H$	32	$FFFF\ 93A8_H$	0	32	√	√	√	√	√	√	√	√	√
DMASS	DTSFSL transfer request clear	DTFSC014	$0000\ 0000_H$	32	$FFFF\ 93AC_H$	0	32	√	√	√	√	√	√	√	√	√
DMASS	DTS source address	DTSA015	Undefined	32	$FFFF\ 93C0_H$	0	32	√	√	√	√	√	√	√	√	√
DMASS	DTS destination address	DTDA015	Undefined	32	$FFFF\ 93C4_H$	0	32	√	√	√	√	√	√	√	√	√
DMASS	DTS transfer count	DTTC015	Undefined	32	$FFFF\ 93C8_H$	0	32	√	√	√	√	√	√	√	√	√
DMASS	DTS transfer control	DTTCT015	Undefined	32	$FFFF\ 93CC_H$	0	32	√	√	√	√	√	√	√	√	√
DMASS	DTS reload source address	DTRSA015	Undefined	32	$FFFF\ 93D0_H$	0	32	√	√	√	√	√	√	√	√	√
DMASS	DTS reload destination address	DTRDA015	Undefined	32	$FFFF\ 93D4_H$	0	32	√	√	√	√	√	√	√	√	√
DMASS	DTS reload transfer count	DTRTC015	Undefined	32	$FFFF\ 93D8_H$	0	32	√	√	√	√	√	√	√	√	√
DMASS	DTS transfer count compare	DTTCC015	Undefined	32	$FFFF\ 93DC_H$	0	32	√	√	√	√	√	√	√	√	√
DMASS	DTSFSL operation setting	DTFSL015	$0000\ 0000_H$	32	$FFFF\ 93E0_H$	0	32	√	√	√	√	√	√	√	√	√
DMASS	DTSFSL transfer request status	DTFST015	$0000\ 0000_H$	32	$FFFF\ 93E4_H$	0	32	√	√	√	√	√	√	√	√	√
DMASS	DTSFSL transfer request set	DTFSS015	$0000\ 0000_H$	32	$FFFF\ 93E8_H$	0	32	√	√	√	√	√	√	√	√	√
DMASS	DTSFSL transfer request clear	DTFSC015	$0000\ 0000_H$	32	$FFFF\ 93EC_H$	0	32	√	√	√	√	√	√	√	√	√
DMASS	DTS source address	DTSA016	Undefined	32	$FFFF\ 9400_H$	0	32	√	√	√	√	√	√	√	√	√
DMASS	DTS destination address	DTDA016	Undefined	32	$FFFF\ 9404_H$	0	32	√	√	√	√	√	√	√	√	√
DMASS	DTS transfer count	DTTC016	Undefined	32	$FFFF\ 9408_H$	0	32	√	√	√	√	√	√	√	√	√
DMASS	DTS transfer control	DTTCT016	Undefined	32	$FFFF\ 940C_H$	0	32	√	√	√	√	√	√	√	√	√
DMASS	DTS reload source address	DTRSA016	Undefined	32	$FFFF\ 9410_H$	0	32	√	√	√	√	√	√	√	√	√
DMASS	DTS reload destination address	DTRDA016	Undefined	32	$FFFF\ 9414_H$	0	32	√	√	√	√	√	√	√	√	√
DMASS	DTS reload transfer count	DTRTC016	Undefined	32	$FFFF\ 9418_H$	0	32	√	√	√	√	√	√	√	√	√
DMASS	DTS transfer count compare	DTTCC016	Undefined	32	$FFFF\ 941C_H$	0	32	√	√	√	√	√	√	√	√	√
DMASS	DTSFSL operation setting	DTFSL016	$0000\ 0000_H$	32	$FFFF\ 9420_H$	0	32	√	√	√	√	√	√	√	√	√
DMASS	DTSFSL transfer request status	DTFST016	$0000\ 0000_H$	32	$FFFF\ 9424_H$	0	32	√	√	√	√	√	√	√	√	√
DMASS	DTSFSL transfer request set	DTFSS016	$0000\ 0000_H$	32	$FFFF\ 9428_H$	0	32	√	√	√	√	√	√	√	√	√
DMASS	DTSFSL transfer request clear	DTFSC016	$0000\ 0000_H$	32	$FFFF\ 942C_H$	0	32	√	√	√	√	√	√	√	√	√
DMASS	DTS source address	DTSA017	Undefined	32	$FFFF\ 9440_H$	0	32	√	√	√	√	√	√	√	√	√
DMASS	DTS destination address	DTDA017	Undefined	32	$FFFF\ 9444_H$	0	32	√	√	√	√	√	√	√	√	√
DMASS	DTS transfer count	DTTC017	Undefined	32	$FFFF\ 9448_H$	0	32	√	√	√	√	√	√	√	√	√
DMASS	DTS transfer control	DTTCT017	Undefined	32	$FFFF\ 944C_H$	0	32	√	√	√	√	√	√	√	√	√
DMASS	DTS reload source address	DTRSA017	Undefined	32	$FFFF\ 9450_H$	0	32	√	√	√	√	√	√	√	√	√
DMASS	DTS reload destination address	DTRDA017	Undefined	32	$FFFF\ 9454_H$	0	32	√	√	√	√	√	√	√	√	√
DMASS	DTS reload transfer count	DTRTC017	Undefined	32	$FFFF\ 9458_H$	0	32	√	√	√	√	√	√	√	√	√
DMASS	DTS transfer count compare	DTTCC017	Undefined	32	$FFFF\ 945C_H$	0	32	√	√	√	√	√	√	√	√	√
DMASS	DTSFSL operation setting	DTFSL017	$0000\ 0000_H$	32	$FFFF\ 9460_H$	0	32	√	√	√	√	√	√	√	√	√
DMASS	DTSFSL transfer request status	DTFST017	$0000\ 0000_H$	32	$FFFF\ 9464_H$	0	32	√	√	√	√	√	√	√	√	√
DMASS	DTSFSL transfer request set	DTFSS017	$0000\ 0000_H$	32	$FFFF\ 9468_H$	0	32	√	√	√	√	√	√	√	√	√
DMASS	DTSFSL transfer request clear	DTFSC017	$0000\ 0000_H$	32	$FFFF\ 946C_H$	0	32	√	√	√	√	√	√	√	√	√
DMASS	DTS source address	DTSA018	Undefined	32	$FFFF\ 9480_H$	0	32	√	√	√	√	√	√	√	√	√
DMASS	DTS destination address	DTDA018	Undefined	32	$FFFF\ 9484_H$	0	32	√	√	√	√	√	√	√	√	√
DMASS	DTS transfer count	DTTC018	Undefined	32	$FFFF\ 9488_H$	0	32	√	√	√	√	√	√	√	√	√

Table A.1 List of Registers (86/124)

Module	Register	Symbol	Value after Reset	Number of Bits	Address	Peripheral IP group	Access Size	Reset Source*1							Access Authority*1	
								POCRES	CVMRES	EXTRES	DBRES	ECMRES	BISTRES	SWRES	SV	UM
DMASS	DTS transfer control	DTTCT018	Undefined	32	FFFF 948C$_H$	0	32	√	√	√	√	√	√	√	√	√
DMASS	DTS reload source address	DTRSA018	Undefined	32	FFFF 9490$_H$	0	32	√	√	√	√	√	√	√	√	√
DMASS	DTS reload destination address	DTRDA018	Undefined	32	FFFF 9494$_H$	0	32	√	√	√	√	√	√	√	√	√
DMASS	DTS reload transfer count	DTRTC018	Undefined	32	FFFF 9498$_H$	0	32	√	√	√	√	√	√	√	√	√
DMASS	DTS transfer count compare	DTTCC018	Undefined	32	FFFF 949C$_H$	0	32	√	√	√	√	√	√	√	√	√
DMASS	DTSFSL operation setting	DTFSL018	0000 0000$_H$	32	FFFF 94A0$_H$	0	32	√	√	√	√	√	√	√	√	√
DMASS	DTSFSL transfer request status	DTFST018	0000 0000$_H$	32	FFFF 94A4$_H$	0	32	√	√	√	√	√	√	√	√	√
DMASS	DTSFSL transfer request set	DTFSS018	0000 0000$_H$	32	FFFF 94A8$_H$	0	32	√	√	√	√	√	√	√	√	√
DMASS	DTSFSL transfer request clear	DTFSC018	0000 0000$_H$	32	FFFF 94AC$_H$	0	32	√	√	√	√	√	√	√	√	√
DMASS	DTS source address	DTSA019	Undefined	32	FFFF 94C0$_H$	0	32	√	√	√	√	√	√	√	√	√
DMASS	DTS destination address	DTDA019	Undefined	32	FFFF 94C4$_H$	0	32	√	√	√	√	√	√	√	√	√
DMASS	DTS transfer count	DTTC019	Undefined	32	FFFF 94C8$_H$	0	32	√	√	√	√	√	√	√	√	√
DMASS	DTS transfer control	DTTCT019	Undefined	32	FFFF 94CC$_H$	0	32	√	√	√	√	√	√	√	√	√
DMASS	DTS reload source address	DTRSA019	Undefined	32	FFFF 94D0$_H$	0	32	√	√	√	√	√	√	√	√	√
DMASS	DTS reload destination address	DTRDA019	Undefined	32	FFFF 94D4$_H$	0	32	√	√	√	√	√	√	√	√	√
DMASS	DTS reload transfer count	DTRTC019	Undefined	32	FFFF 94D8$_H$	0	32	√	√	√	√	√	√	√	√	√
DMASS	DTS transfer count compare	DTTCC019	Undefined	32	FFFF 94DC$_H$	0	32	√	√	√	√	√	√	√	√	√
DMASS	DTSFSL operation setting	DTFSL019	0000 0000$_H$	32	FFFF 94E0$_H$	0	32	√	√	√	√	√	√	√	√	√
DMASS	DTSFSL transfer request status	DTFST019	0000 0000$_H$	32	FFFF 94E4$_H$	0	32	√	√	√	√	√	√	√	√	√
DMASS	DTSFSL transfer request set	DTFSS019	0000 0000$_H$	32	FFFF 94E8$_H$	0	32	√	√	√	√	√	√	√	√	√
DMASS	DTSFSL transfer request clear	DTFSC019	0000 0000$_H$	32	FFFF 94EC$_H$	0	32	√	√	√	√	√	√	√	√	√
DMASS	DTS source address	DTSA020	Undefined	32	FFFF 9500$_H$	0	32	√	√	√	√	√	√	√	√	√
DMASS	DTS destination address	DTDA020	Undefined	32	FFFF 9504$_H$	0	32	√	√	√	√	√	√	√	√	√
DMASS	DTS transfer count	DTTC020	Undefined	32	FFFF 9508$_H$	0	32	√	√	√	√	√	√	√	√	√
DMASS	DTS transfer control	DTTCT020	Undefined	32	FFFF 950C$_H$	0	32	√	√	√	√	√	√	√	√	√
DMASS	DTS reload source address	DTRSA020	Undefined	32	FFFF 9510$_H$	0	32	√	√	√	√	√	√	√	√	√
DMASS	DTS reload destination address	DTRDA020	Undefined	32	FFFF 9514$_H$	0	32	√	√	√	√	√	√	√	√	√
DMASS	DTS reload transfer count	DTRTC020	Undefined	32	FFFF 9518$_H$	0	32	√	√	√	√	√	√	√	√	√
DMASS	DTS transfer count compare	DTTCC020	Undefined	32	FFFF 951C$_H$	0	32	√	√	√	√	√	√	√	√	√
DMASS	DTSFSL operation setting	DTFSL020	0000 0000$_H$	32	FFFF 9520$_H$	0	32	√	√	√	√	√	√	√	√	√
DMASS	DTSFSL transfer request status	DTFST020	0000 0000$_H$	32	FFFF 9524$_H$	0	32	√	√	√	√	√	√	√	√	√
DMASS	DTSFSL transfer request set	DTFSS020	0000 0000$_H$	32	FFFF 9528$_H$	0	32	√	√	√	√	√	√	√	√	√
DMASS	DTSFSL transfer request clear	DTFSC020	0000 0000$_H$	32	FFFF 952C$_H$	0	32	√	√	√	√	√	√	√	√	√
DMASS	DTS source address	DTSA021	Undefined	32	FFFF 9540$_H$	0	32	√	√	√	√	√	√	√	√	√
DMASS	DTS destination address	DTDA021	Undefined	32	FFFF 9544$_H$	0	32	√	√	√	√	√	√	√	√	√
DMASS	DTS transfer count	DTTC021	Undefined	32	FFFF 9548$_H$	0	32	√	√	√	√	√	√	√	√	√
DMASS	DTS transfer control	DTTCT021	Undefined	32	FFFF 954C$_H$	0	32	√	√	√	√	√	√	√	√	√
DMASS	DTS reload source address	DTRSA021	Undefined	32	FFFF 9550$_H$	0	32	√	√	√	√	√	√	√	√	√
DMASS	DTS reload destination address	DTRDA021	Undefined	32	FFFF 9554$_H$	0	32	√	√	√	√	√	√	√	√	√
DMASS	DTS reload transfer count	DTRTC021	Undefined	32	FFFF 9558$_H$	0	32	√	√	√	√	√	√	√	√	√
DMASS	DTS transfer count compare	DTTCC021	Undefined	32	FFFF 955C$_H$	0	32	√	√	√	√	√	√	√	√	√
DMASS	DTSFSL operation setting	DTFSL021	0000 0000$_H$	32	FFFF 9560$_H$	0	32	√	√	√	√	√	√	√	√	√
DMASS	DTSFSL transfer request status	DTFST021	0000 0000$_H$	32	FFFF 9564$_H$	0	32	√	√	√	√	√	√	√	√	√
DMASS	DTSFSL transfer request set	DTFSS021	0000 0000$_H$	32	FFFF 9568$_H$	0	32	√	√	√	√	√	√	√	√	√
DMASS	DTSFSL transfer request clear	DTFSC021	0000 0000$_H$	32	FFFF 956C$_H$	0	32	√	√	√	√	√	√	√	√	√
DMASS	DTS source address	DTSA022	Undefined	32	FFFF 9580$_H$	0	32	√	√	√	√	√	√	√	√	√
DMASS	DTS destination address	DTDA022	Undefined	32	FFFF 9584$_H$	0	32	√	√	√	√	√	√	√	√	√
DMASS	DTS transfer count	DTTC022	Undefined	32	FFFF 9588$_H$	0	32	√	√	√	√	√	√	√	√	√
DMASS	DTS transfer control	DTTCT022	Undefined	32	FFFF 958C$_H$	0	32	√	√	√	√	√	√	√	√	√
DMASS	DTS reload source address	DTRSA022	Undefined	32	FFFF 9590$_H$	0	32	√	√	√	√	√	√	√	√	√
DMASS	DTS reload destination address	DTRDA022	Undefined	32	FFFF 9594$_H$	0	32	√	√	√	√	√	√	√	√	√
DMASS	DTS reload transfer count	DTRTC022	Undefined	32	FFFF 9598$_H$	0	32	√	√	√	√	√	√	√	√	√
DMASS	DTS transfer count compare	DTTCC022	Undefined	32	FFFF 959C$_H$	0	32	√	√	√	√	√	√	√	√	√

Table A.1 List of Registers (87/124)

Module	Register	Symbol	Value after Reset	Number of Bits	Address	Peripheral IP group	Access Size	Reset Source*1							Access Authority*1	
								POCRES	CVMRES	EXTRES	DBRES	ECMRES	BISTRES	SWRES	SV	UM
DMASS	DTSFSL operation setting	DTFSL022	0000 0000$_H$	32	FFFF 95A0$_H$	0	32	√	√	√	√	√	√	√	√	√
DMASS	DTSFSL transfer request status	DTFST022	0000 0000$_H$	32	FFFF 95A4$_H$	0	32	√	√	√	√	√	√	√	√	√
DMASS	DTSFSL transfer request set	DTFSS022	0000 0000$_H$	32	FFFF 95A8$_H$	0	32	√	√	√	√	√	√	√	√	√
DMASS	DTSFSL transfer request clear	DTFSC022	0000 0000$_H$	32	FFFF 95AC$_H$	0	32	√	√	√	√	√	√	√	√	√
DMASS	DTS source address	DTSA023	Undefined	32	FFFF 95C0$_H$	0	32	√	√	√	√	√	√	√	√	√
DMASS	DTS destination address	DTDA023	Undefined	32	FFFF 95C4$_H$	0	32	√	√	√	√	√	√	√	√	√
DMASS	DTS transfer count	DTTC023	Undefined	32	FFFF 95C8$_H$	0	32	√	√	√	√	√	√	√	√	√
DMASS	DTS transfer control	DTTCT023	Undefined	32	FFFF 95CC$_H$	0	32	√	√	√	√	√	√	√	√	√
DMASS	DTS reload source address	DTRSA023	Undefined	32	FFFF 95D0$_H$	0	32	√	√	√	√	√	√	√	√	√
DMASS	DTS reload destination address	DTRDA023	Undefined	32	FFFF 95D4$_H$	0	32	√	√	√	√	√	√	√	√	√
DMASS	DTS reload transfer count	DTRTC023	Undefined	32	FFFF 95D8$_H$	0	32	√	√	√	√	√	√	√	√	√
DMASS	DTS transfer count compare	DTTCC023	Undefined	32	FFFF 95DC$_H$	0	32	√	√	√	√	√	√	√	√	√
DMASS	DTSFSL operation setting	DTFSL023	0000 0000$_H$	32	FFFF 95E0$_H$	0	32	√	√	√	√	√	√	√	√	√
DMASS	DTSFSL transfer request status	DTFST023	0000 0000$_H$	32	FFFF 95E4$_H$	0	32	√	√	√	√	√	√	√	√	√
DMASS	DTSFSL transfer request set	DTFSS023	0000 0000$_H$	32	FFFF 95E8$_H$	0	32	√	√	√	√	√	√	√	√	√
DMASS	DTSFSL transfer request clear	DTFSC023	0000 0000$_H$	32	FFFF 95EC$_H$	0	32	√	√	√	√	√	√	√	√	√
DMASS	DTS source address	DTSA024	Undefined	32	FFFF 9600$_H$	0	32	√	√	√	√	√	√	√	√	√
DMASS	DTS destination address	DTDA024	Undefined	32	FFFF 9604$_H$	0	32	√	√	√	√	√	√	√	√	√
DMASS	DTS transfer count	DTTC024	Undefined	32	FFFF 9608$_H$	0	32	√	√	√	√	√	√	√	√	√
DMASS	DTS transfer control	DTTCT024	Undefined	32	FFFF 960C$_H$	0	32	√	√	√	√	√	√	√	√	√
DMASS	DTS reload source address	DTRSA024	Undefined	32	FFFF 9610$_H$	0	32	√	√	√	√	√	√	√	√	√
DMASS	DTS reload destination address	DTRDA024	Undefined	32	FFFF 9614$_H$	0	32	√	√	√	√	√	√	√	√	√
DMASS	DTS reload transfer count	DTRTC024	Undefined	32	FFFF 9618$_H$	0	32	√	√	√	√	√	√	√	√	√
DMASS	DTS transfer count compare	DTTCC024	Undefined	32	FFFF 961C$_H$	0	32	√	√	√	√	√	√	√	√	√
DMASS	DTSFSL operation setting	DTFSL024	0000 0000$_H$	32	FFFF 9620$_H$	0	32	√	√	√	√	√	√	√	√	√
DMASS	DTSFSL transfer request status	DTFST024	0000 0000$_H$	32	FFFF 9624$_H$	0	32	√	√	√	√	√	√	√	√	√
DMASS	DTSFSL transfer request set	DTFSS024	0000 0000$_H$	32	FFFF 9628$_H$	0	32	√	√	√	√	√	√	√	√	√
DMASS	DTSFSL transfer request clear	DTFSC024	0000 0000$_H$	32	FFFF 962C$_H$	0	32	√	√	√	√	√	√	√	√	√
DMASS	DTS source address	DTSA025	Undefined	32	FFFF 9640$_H$	0	32	√	√	√	√	√	√	√	√	√
DMASS	DTS destination address	DTDA025	Undefined	32	FFFF 9644$_H$	0	32	√	√	√	√	√	√	√	√	√
DMASS	DTS transfer count	DTTC025	Undefined	32	FFFF 9648$_H$	0	32	√	√	√	√	√	√	√	√	√
DMASS	DTS transfer control	DTTCT025	Undefined	32	FFFF 964C$_H$	0	32	√	√	√	√	√	√	√	√	√
DMASS	DTS reload source address	DTRSA025	Undefined	32	FFFF 9650$_H$	0	32	√	√	√	√	√	√	√	√	√
DMASS	DTS reload destination address	DTRDA025	Undefined	32	FFFF 9654$_H$	0	32	√	√	√	√	√	√	√	√	√
DMASS	DTS reload transfer count	DTRTC025	Undefined	32	FFFF 9658$_H$	0	32	√	√	√	√	√	√	√	√	√
DMASS	DTS transfer count compare	DTTCC025	Undefined	32	FFFF 965C$_H$	0	32	√	√	√	√	√	√	√	√	√
DMASS	DTSFSL operation setting	DTFSL025	0000 0000$_H$	32	FFFF 9660$_H$	0	32	√	√	√	√	√	√	√	√	√
DMASS	DTSFSL transfer request status	DTFST025	0000 0000$_H$	32	FFFF 9664$_H$	0	32	√	√	√	√	√	√	√	√	√
DMASS	DTSFSL transfer request set	DTFSS025	0000 0000$_H$	32	FFFF 9668$_H$	0	32	√	√	√	√	√	√	√	√	√
DMASS	DTSFSL transfer request clear	DTFSC025	0000 0000$_H$	32	FFFF 966C$_H$	0	32	√	√	√	√	√	√	√	√	√
DMASS	DTS source address	DTSA026	Undefined	32	FFFF 9680$_H$	0	32	√	√	√	√	√	√	√	√	√
DMASS	DTS destination address	DTDA026	Undefined	32	FFFF 9684$_H$	0	32	√	√	√	√	√	√	√	√	√
DMASS	DTS transfer count	DTTC026	Undefined	32	FFFF 9688$_H$	0	32	√	√	√	√	√	√	√	√	√
DMASS	DTS transfer control	DTTCT026	Undefined	32	FFFF 968C$_H$	0	32	√	√	√	√	√	√	√	√	√
DMASS	DTS reload source address	DTRSA026	Undefined	32	FFFF 9690$_H$	0	32	√	√	√	√	√	√	√	√	√
DMASS	DTS reload destination address	DTRDA026	Undefined	32	FFFF 9694$_H$	0	32	√	√	√	√	√	√	√	√	√
DMASS	DTS reload transfer count	DTRTC026	Undefined	32	FFFF 9698$_H$	0	32	√	√	√	√	√	√	√	√	√
DMASS	DTS transfer count compare	DTTCC026	Undefined	32	FFFF 969C$_H$	0	32	√	√	√	√	√	√	√	√	√
DMASS	DTSFSL operation setting	DTFSL026	0000 0000$_H$	32	FFFF 96A0$_H$	0	32	√	√	√	√	√	√	√	√	√
DMASS	DTSFSL transfer request status	DTFST026	0000 0000$_H$	32	FFFF 96A4$_H$	0	32	√	√	√	√	√	√	√	√	√
DMASS	DTSFSL transfer request set	DTFSS026	0000 0000$_H$	32	FFFF 96A8$_H$	0	32	√	√	√	√	√	√	√	√	√
DMASS	DTSFSL transfer request clear	DTFSC026	0000 0000$_H$	32	FFFF 96AC$_H$	0	32	√	√	√	√	√	√	√	√	√
DMASS	DTS source address	DTSA027	Undefined	32	FFFF 96C0$_H$	0	32	√	√	√	√	√	√	√	√	√

Table A.1 List of Registers (88/124)

Module	Register	Symbol	Value after Reset	Number of Bits	Address	Peripheral IP group	Access Size	Reset Source*1							Access Authority*1	
								POCRES	CVMRES	EXTRES	DBRES	ECMRES	BISTRES	SWRES	SV	UM
DMASS	DTS destination address	DTDA027	Undefined	32	FFFF 96C4$_H$	0	32	√	√	√	√	√	√	√	√	√
DMASS	DTS transfer count	DTTC027	Undefined	32	FFFF 96C8$_H$	0	32	√	√	√	√	√	√	√	√	√
DMASS	DTS transfer control	DTTCT027	Undefined	32	FFFF 96CC$_H$	0	32	√	√	√	√	√	√	√	√	√
DMASS	DTS reload source address	DTRSA027	Undefined	32	FFFF 96D0$_H$	0	32	√	√	√	√	√	√	√	√	√
DMASS	DTS reload destination address	DTRDA027	Undefined	32	FFFF 96D4$_H$	0	32	√	√	√	√	√	√	√	√	√
DMASS	DTS reload transfer count	DTRTC027	Undefined	32	FFFF 96D8$_H$	0	32	√	√	√	√	√	√	√	√	√
DMASS	DTS transfer count compare	DTTCC027	Undefined	32	FFFF 96DC$_H$	0	32	√	√	√	√	√	√	√	√	√
DMASS	DTSFSL operation setting	DTFSL027	0000 0000$_H$	32	FFFF 96E0$_H$	0	32	√	√	√	√	√	√	√	√	√
DMASS	DTSFSL transfer request status	DTFST027	0000 0000$_H$	32	FFFF 96E4$_H$	0	32	√	√	√	√	√	√	√	√	√
DMASS	DTSFSL transfer request set	DTFSS027	0000 0000$_H$	32	FFFF 96E8$_H$	0	32	√	√	√	√	√	√	√	√	√
DMASS	DTSFSL transfer request clear	DTFSC027	0000 0000$_H$	32	FFFF 96EC$_H$	0	32	√	√	√	√	√	√	√	√	√
DMASS	DTS source address	DTSA028	Undefined	32	FFFF 9700$_H$	0	32	√	√	√	√	√	√	√	√	√
DMASS	DTS destination address	DTDA028	Undefined	32	FFFF 9704$_H$	0	32	√	√	√	√	√	√	√	√	√
DMASS	DTS transfer count	DTTC028	Undefined	32	FFFF 9708$_H$	0	32	√	√	√	√	√	√	√	√	√
DMASS	DTS transfer control	DTTCT028	Undefined	32	FFFF 970C$_H$	0	32	√	√	√	√	√	√	√	√	√
DMASS	DTS reload source address	DTRSA028	Undefined	32	FFFF 9710$_H$	0	32	√	√	√	√	√	√	√	√	√
DMASS	DTS reload destination address	DTRDA028	Undefined	32	FFFF 9714$_H$	0	32	√	√	√	√	√	√	√	√	√
DMASS	DTS reload transfer count	DTRTC028	Undefined	32	FFFF 9718$_H$	0	32	√	√	√	√	√	√	√	√	√
DMASS	DTS transfer count compare	DTTCC028	Undefined	32	FFFF 971C$_H$	0	32	√	√	√	√	√	√	√	√	√
DMASS	DTSFSL operation setting	DTFSL028	0000 0000$_H$	32	FFFF 9720$_H$	0	32	√	√	√	√	√	√	√	√	√
DMASS	DTSFSL transfer request status	DTFST028	0000 0000$_H$	32	FFFF 9724$_H$	0	32	√	√	√	√	√	√	√	√	√
DMASS	DTSFSL transfer request set	DTFSS028	0000 0000$_H$	32	FFFF 9728$_H$	0	32	√	√	√	√	√	√	√	√	√
DMASS	DTSFSL transfer request clear	DTFSC028	0000 0000$_H$	32	FFFF 972C$_H$	0	32	√	√	√	√	√	√	√	√	√
DMASS	DTS source address	DTSA029	Undefined	32	FFFF 9740$_H$	0	32	√	√	√	√	√	√	√	√	√
DMASS	DTS destination address	DTDA029	Undefined	32	FFFF 9744$_H$	0	32	√	√	√	√	√	√	√	√	√
DMASS	DTS transfer count	DTTC029	Undefined	32	FFFF 9748$_H$	0	32	√	√	√	√	√	√	√	√	√
DMASS	DTS transfer control	DTTCT029	Undefined	32	FFFF 974C$_H$	0	32	√	√	√	√	√	√	√	√	√
DMASS	DTS reload source address	DTRSA029	Undefined	32	FFFF 9750$_H$	0	32	√	√	√	√	√	√	√	√	√
DMASS	DTS reload destination address	DTRDA029	Undefined	32	FFFF 9754$_H$	0	32	√	√	√	√	√	√	√	√	√
DMASS	DTS reload transfer count	DTRTC029	Undefined	32	FFFF 9758$_H$	0	32	√	√	√	√	√	√	√	√	√
DMASS	DTS transfer count compare	DTTCC029	Undefined	32	FFFF 975C$_H$	0	32	√	√	√	√	√	√	√	√	√
DMASS	DTSFSL operation setting	DTFSL029	0000 0000$_H$	32	FFFF 9760$_H$	0	32	√	√	√	√	√	√	√	√	√
DMASS	DTSFSL transfer request status	DTFST029	0000 0000$_H$	32	FFFF 9764$_H$	0	32	√	√	√	√	√	√	√	√	√
DMASS	DTSFSL transfer request set	DTFSS029	0000 0000$_H$	32	FFFF 9768$_H$	0	32	√	√	√	√	√	√	√	√	√
DMASS	DTSFSL transfer request clear	DTFSC029	0000 0000$_H$	32	FFFF 976C$_H$	0	32	√	√	√	√	√	√	√	√	√
DMASS	DTS source address	DTSA030	Undefined	32	FFFF 9780$_H$	0	32	√	√	√	√	√	√	√	√	√
DMASS	DTS destination address	DTDA030	Undefined	32	FFFF 9784$_H$	0	32	√	√	√	√	√	√	√	√	√
DMASS	DTS transfer count	DTTC030	Undefined	32	FFFF 9788$_H$	0	32	√	√	√	√	√	√	√	√	√
DMASS	DTS transfer control	DTTCT030	Undefined	32	FFFF 978C$_H$	0	32	√	√	√	√	√	√	√	√	√
DMASS	DTS reload source address	DTRSA030	Undefined	32	FFFF 9790$_H$	0	32	√	√	√	√	√	√	√	√	√
DMASS	DTS reload destination address	DTRDA030	Undefined	32	FFFF 9794$_H$	0	32	√	√	√	√	√	√	√	√	√
DMASS	DTS reload transfer count	DTRTC030	Undefined	32	FFFF 9798$_H$	0	32	√	√	√	√	√	√	√	√	√
DMASS	DTS transfer count compare	DTTCC030	Undefined	32	FFFF 979C$_H$	0	32	√	√	√	√	√	√	√	√	√
DMASS	DTSFSL operation setting	DTFSL030	0000 0000$_H$	32	FFFF 97A0$_H$	0	32	√	√	√	√	√	√	√	√	√
DMASS	DTSFSL transfer request status	DTFST030	0000 0000$_H$	32	FFFF 97A4$_H$	0	32	√	√	√	√	√	√	√	√	√
DMASS	DTSFSL transfer request set	DTFSS030	0000 0000$_H$	32	FFFF 97A8$_H$	0	32	√	√	√	√	√	√	√	√	√
DMASS	DTSFSL transfer request clear	DTFSC030	0000 0000$_H$	32	FFFF 97AC$_H$	0	32	√	√	√	√	√	√	√	√	√
DMASS	DTS source address	DTSA031	Undefined	32	FFFF 97C0$_H$	0	32	√	√	√	√	√	√	√	√	√
DMASS	DTS destination address	DTDA031	Undefined	32	FFFF 97C4$_H$	0	32	√	√	√	√	√	√	√	√	√
DMASS	DTS transfer count	DTTC031	Undefined	32	FFFF 97C8$_H$	0	32	√	√	√	√	√	√	√	√	√
DMASS	DTS transfer control	DTTCT031	Undefined	32	FFFF 97CC$_H$	0	32	√	√	√	√	√	√	√	√	√
DMASS	DTS reload source address	DTRSA031	Undefined	32	FFFF 97D0$_H$	0	32	√	√	√	√	√	√	√	√	√
DMASS	DTS reload destination address	DTRDA031	Undefined	32	FFFF 97D4$_H$	0	32	√	√	√	√	√	√	√	√	√

Table A.1 List of Registers (89/124)

Module	Register	Symbol	Value after Reset	Number of Bits	Address	Peripheral IP group	Access Size	Reset Source*1							Access Authority*1	
								POCRES	CVMRES	EXTRES	DBRES	ECMRES	BISTRES	SWRES	SV	UM
DMASS	DTS reload transfer count	DTRTC031	Undefined	32	FFFF 97D8$_H$	0	32	√	√	√	√	√	√	√	√	√
DMASS	DTS transfer count compare	DTTCC031	Undefined	32	FFFF 97DC$_H$	0	32	√	√	√	√	√	√	√	√	√
DMASS	DTSFSL operation setting	DTFSL031	0000 0000$_H$	32	FFFF 97E0$_H$	0	32	√	√	√	√	√	√	√	√	√
DMASS	DTSFSL transfer request status	DTFST031	0000 0000$_H$	32	FFFF 97E4$_H$	0	32	√	√	√	√	√	√	√	√	√
DMASS	DTSFSL transfer request set	DTFSS031	0000 0000$_H$	32	FFFF 97E8$_H$	0	32	√	√	√	√	√	√	√	√	√
DMASS	DTSFSL transfer request clear	DTFSC031	0000 0000$_H$	32	FFFF 97EC$_H$	0	32	√	√	√	√	√	√	√	√	√
DMASS	DTS source address	DTSA032	Undefined	32	FFFF 9800$_H$	0	32	√	√	√	√	√	√	√	√	√
DMASS	DTS destination address	DTDA032	Undefined	32	FFFF 9804$_H$	0	32	√	√	√	√	√	√	√	√	√
DMASS	DTS transfer count	DTTC032	Undefined	32	FFFF 9808$_H$	0	32	√	√	√	√	√	√	√	√	√
DMASS	DTS transfer control	DTTCT032	Undefined	32	FFFF 980C$_H$	0	32	√	√	√	√	√	√	√	√	√
DMASS	DTS reload source address	DTRSA032	Undefined	32	FFFF 9810$_H$	0	32	√	√	√	√	√	√	√	√	√
DMASS	DTS reload destination address	DTRDA032	Undefined	32	FFFF 9814$_H$	0	32	√	√	√	√	√	√	√	√	√
DMASS	DTS reload transfer count	DTRTC032	Undefined	32	FFFF 9818$_H$	0	32	√	√	√	√	√	√	√	√	√
DMASS	DTS transfer count compare	DTTCC032	Undefined	32	FFFF 981C$_H$	0	32	√	√	√	√	√	√	√	√	√
DMASS	DTSFSL operation setting	DTFSL032	0000 0000$_H$	32	FFFF 9820$_H$	0	32	√	√	√	√	√	√	√	√	√
DMASS	DTSFSL transfer request status	DTFST032	0000 0000$_H$	32	FFFF 9824$_H$	0	32	√	√	√	√	√	√	√	√	√
DMASS	DTSFSL transfer request set	DTFSS032	0000 0000$_H$	32	FFFF 9828$_H$	0	32	√	√	√	√	√	√	√	√	√
DMASS	DTSFSL transfer request clear	DTFSC032	0000 0000$_H$	32	FFFF 982C$_H$	0	32	√	√	√	√	√	√	√	√	√
DMASS	DTS source address	DTSA033	Undefined	32	FFFF 9840$_H$	0	32	√	√	√	√	√	√	√	√	√
DMASS	DTS destination address	DTDA033	Undefined	32	FFFF 9844$_H$	0	32	√	√	√	√	√	√	√	√	√
DMASS	DTS transfer count	DTTC033	Undefined	32	FFFF 9848$_H$	0	32	√	√	√	√	√	√	√	√	√
DMASS	DTS transfer control	DTTCT033	Undefined	32	FFFF 984C$_H$	0	32	√	√	√	√	√	√	√	√	√
DMASS	DTS reload source address	DTRSA033	Undefined	32	FFFF 9850$_H$	0	32	√	√	√	√	√	√	√	√	√
DMASS	DTS reload destination address	DTRDA033	Undefined	32	FFFF 9854$_H$	0	32	√	√	√	√	√	√	√	√	√
DMASS	DTS reload transfer count	DTRTC033	Undefined	32	FFFF 9858$_H$	0	32	√	√	√	√	√	√	√	√	√
DMASS	DTS transfer count compare	DTTCC033	Undefined	32	FFFF 985C$_H$	0	32	√	√	√	√	√	√	√	√	√
DMASS	DTSFSL operation setting	DTFSL033	0000 0000$_H$	32	FFFF 9860$_H$	0	32	√	√	√	√	√	√	√	√	√
DMASS	DTSFSL transfer request status	DTFST033	0000 0000$_H$	32	FFFF 9864$_H$	0	32	√	√	√	√	√	√	√	√	√
DMASS	DTSFSL transfer request set	DTFSS033	0000 0000$_H$	32	FFFF 9868$_H$	0	32	√	√	√	√	√	√	√	√	√
DMASS	DTSFSL transfer request clear	DTFSC033	0000 0000$_H$	32	FFFF 986C$_H$	0	32	√	√	√	√	√	√	√	√	√
DMASS	DTS source address	DTSA034	Undefined	32	FFFF 9880$_H$	0	32	√	√	√	√	√	√	√	√	√
DMASS	DTS destination address	DTDA034	Undefined	32	FFFF 9884$_H$	0	32	√	√	√	√	√	√	√	√	√
DMASS	DTS transfer count	DTTC034	Undefined	32	FFFF 9888$_H$	0	32	√	√	√	√	√	√	√	√	√
DMASS	DTS transfer control	DTTCT034	Undefined	32	FFFF 988C$_H$	0	32	√	√	√	√	√	√	√	√	√
DMASS	DTS reload source address	DTRSA034	Undefined	32	FFFF 9890$_H$	0	32	√	√	√	√	√	√	√	√	√
DMASS	DTS reload destination address	DTRDA034	Undefined	32	FFFF 9894$_H$	0	32	√	√	√	√	√	√	√	√	√
DMASS	DTS reload transfer count	DTRTC034	Undefined	32	FFFF 9898$_H$	0	32	√	√	√	√	√	√	√	√	√
DMASS	DTS transfer count compare	DTTCC034	Undefined	32	FFFF 989C$_H$	0	32	√	√	√	√	√	√	√	√	√
DMASS	DTSFSL operation setting	DTFSL034	0000 0000$_H$	32	FFFF 98A0$_H$	0	32	√	√	√	√	√	√	√	√	√
DMASS	DTSFSL transfer request status	DTFST034	0000 0000$_H$	32	FFFF 98A4$_H$	0	32	√	√	√	√	√	√	√	√	√
DMASS	DTSFSL transfer request set	DTFSS034	0000 0000$_H$	32	FFFF 98A8$_H$	0	32	√	√	√	√	√	√	√	√	√
DMASS	DTSFSL transfer request clear	DTFSC034	0000 0000$_H$	32	FFFF 98AC$_H$	0	32	√	√	√	√	√	√	√	√	√
DMASS	DTS source address	DTSA035	Undefined	32	FFFF 98C0$_H$	0	32	√	√	√	√	√	√	√	√	√
DMASS	DTS destination address	DTDA035	Undefined	32	FFFF 98C4$_H$	0	32	√	√	√	√	√	√	√	√	√
DMASS	DTS transfer count	DTTC035	Undefined	32	FFFF 98C8$_H$	0	32	√	√	√	√	√	√	√	√	√
DMASS	DTS transfer control	DTTCT035	Undefined	32	FFFF 98CC$_H$	0	32	√	√	√	√	√	√	√	√	√
DMASS	DTS reload source address	DTRSA035	Undefined	32	FFFF 98D0$_H$	0	32	√	√	√	√	√	√	√	√	√
DMASS	DTS reload destination address	DTRDA035	Undefined	32	FFFF 98D4$_H$	0	32	√	√	√	√	√	√	√	√	√
DMASS	DTS reload transfer count	DTRTC035	Undefined	32	FFFF 98D8$_H$	0	32	√	√	√	√	√	√	√	√	√
DMASS	DTS transfer count compare	DTTCC035	Undefined	32	FFFF 98DC$_H$	0	32	√	√	√	√	√	√	√	√	√
DMASS	DTSFSL operation setting	DTFSL035	0000 0000$_H$	32	FFFF 98E0$_H$	0	32	√	√	√	√	√	√	√	√	√
DMASS	DTSFSL transfer request status	DTFST035	0000 0000$_H$	32	FFFF 98E4$_H$	0	32	√	√	√	√	√	√	√	√	√
DMASS	DTSFSL transfer request set	DTFSS035	0000 0000$_H$	32	FFFF 98E8$_H$	0	32	√	√	√	√	√	√	√	√	√

Table A.1 List of Registers (90/124)

Module	Register	Symbol	Value after Reset	Number of Bits	Address	Peripheral IP group	Access Size	Reset Source*1							Access Authority*1	
								POCRES	CVMRES	EXTRES	DBRES	ECMRES	BISTRES	SWRES	SV	UM
DMASS	DTSFSL transfer request clear	DTFSC035	0000 0000$_H$	32	FFFF 98EC$_H$	0	32	√	√	√	√	√	√	√	√	√
DMASS	DTS source address	DTSA036	Undefined	32	FFFF 9900$_H$	0	32	√	√	√	√	√	√	√	√	√
DMASS	DTS destination address	DTDA036	Undefined	32	FFFF 9904$_H$	0	32	√	√	√	√	√	√	√	√	√
DMASS	DTS transfer count	DTTC036	Undefined	32	FFFF 9908$_H$	0	32	√	√	√	√	√	√	√	√	√
DMASS	DTS transfer control	DTTCT036	Undefined	32	FFFF 990C$_H$	0	32	√	√	√	√	√	√	√	√	√
DMASS	DTS reload source address	DTRSA036	Undefined	32	FFFF 9910$_H$	0	32	√	√	√	√	√	√	√	√	√
DMASS	DTS reload destination address	DTRDA036	Undefined	32	FFFF 9914$_H$	0	32	√	√	√	√	√	√	√	√	√
DMASS	DTS reload transfer count	DTRTC036	Undefined	32	FFFF 9918$_H$	0	32	√	√	√	√	√	√	√	√	√
DMASS	DTS transfer count compare	DTTCC036	Undefined	32	FFFF 991C$_H$	0	32	√	√	√	√	√	√	√	√	√
DMASS	DTSFSL operation setting	DTFSL036	0000 0000$_H$	32	FFFF 9920$_H$	0	32	√	√	√	√	√	√	√	√	√
DMASS	DTSFSL transfer request status	DTFST036	0000 0000$_H$	32	FFFF 9924$_H$	0	32	√	√	√	√	√	√	√	√	√
DMASS	DTSFSL transfer request set	DTFSS036	0000 0000$_H$	32	FFFF 9928$_H$	0	32	√	√	√	√	√	√	√	√	√
DMASS	DTSFSL transfer request clear	DTFSC036	0000 0000$_H$	32	FFFF 992C$_H$	0	32	√	√	√	√	√	√	√	√	√
DMASS	DTS source address	DTSA037	Undefined	32	FFFF 9940$_H$	0	32	√	√	√	√	√	√	√	√	√
DMASS	DTS destination address	DTDA037	Undefined	32	FFFF 9944$_H$	0	32	√	√	√	√	√	√	√	√	√
DMASS	DTS transfer count	DTTC037	Undefined	32	FFFF 9948$_H$	0	32	√	√	√	√	√	√	√	√	√
DMASS	DTS transfer control	DTTCT037	Undefined	32	FFFF 994C$_H$	0	32	√	√	√	√	√	√	√	√	√
DMASS	DTS reload source address	DTRSA037	Undefined	32	FFFF 9950$_H$	0	32	√	√	√	√	√	√	√	√	√
DMASS	DTS reload destination address	DTRDA037	Undefined	32	FFFF 9954$_H$	0	32	√	√	√	√	√	√	√	√	√
DMASS	DTS reload transfer count	DTRTC037	Undefined	32	FFFF 9958$_H$	0	32	√	√	√	√	√	√	√	√	√
DMASS	DTS transfer count compare	DTTCC037	Undefined	32	FFFF 995C$_H$	0	32	√	√	√	√	√	√	√	√	√
DMASS	DTSFSL operation setting	DTFSL037	0000 0000$_H$	32	FFFF 9960$_H$	0	32	√	√	√	√	√	√	√	√	√
DMASS	DTSFSL transfer request status	DTFST037	0000 0000$_H$	32	FFFF 9964$_H$	0	32	√	√	√	√	√	√	√	√	√
DMASS	DTSFSL transfer request set	DTFSS037	0000 0000$_H$	32	FFFF 9968$_H$	0	32	√	√	√	√	√	√	√	√	√
DMASS	DTSFSL transfer request clear	DTFSC037	0000 0000$_H$	32	FFFF 996C$_H$	0	32	√	√	√	√	√	√	√	√	√
DMASS	DTS source address	DTSA038	Undefined	32	FFFF 9980$_H$	0	32	√	√	√	√	√	√	√	√	√
DMASS	DTS destination address	DTDA038	Undefined	32	FFFF 9984$_H$	0	32	√	√	√	√	√	√	√	√	√
DMASS	DTS transfer count	DTTC038	Undefined	32	FFFF 9988$_H$	0	32	√	√	√	√	√	√	√	√	√
DMASS	DTS transfer control	DTTCT038	Undefined	32	FFFF 998C$_H$	0	32	√	√	√	√	√	√	√	√	√
DMASS	DTS reload source address	DTRSA038	Undefined	32	FFFF 9990$_H$	0	32	√	√	√	√	√	√	√	√	√
DMASS	DTS reload destination address	DTRDA038	Undefined	32	FFFF 9994$_H$	0	32	√	√	√	√	√	√	√	√	√
DMASS	DTS reload transfer count	DTRTC038	Undefined	32	FFFF 9998$_H$	0	32	√	√	√	√	√	√	√	√	√
DMASS	DTS transfer count compare	DTTCC038	Undefined	32	FFFF 999C$_H$	0	32	√	√	√	√	√	√	√	√	√
DMASS	DTSFSL operation setting	DTFSL038	0000 0000$_H$	32	FFFF 99A0$_H$	0	32	√	√	√	√	√	√	√	√	√
DMASS	DTSFSL transfer request status	DTFST038	0000 0000$_H$	32	FFFF 99A4$_H$	0	32	√	√	√	√	√	√	√	√	√
DMASS	DTSFSL transfer request set	DTFSS038	0000 0000$_H$	32	FFFF 99A8$_H$	0	32	√	√	√	√	√	√	√	√	√
DMASS	DTSFSL transfer request clear	DTFSC038	0000 0000$_H$	32	FFFF 99AC$_H$	0	32	√	√	√	√	√	√	√	√	√
DMASS	DTS source address	DTSA039	Undefined	32	FFFF 99C0$_H$	0	32	√	√	√	√	√	√	√	√	√
DMASS	DTS destination address	DTDA039	Undefined	32	FFFF 99C4$_H$	0	32	√	√	√	√	√	√	√	√	√
DMASS	DTS transfer count	DTTC039	Undefined	32	FFFF 99C8$_H$	0	32	√	√	√	√	√	√	√	√	√
DMASS	DTS transfer control	DTTCT039	Undefined	32	FFFF 99CC$_H$	0	32	√	√	√	√	√	√	√	√	√
DMASS	DTS reload source address	DTRSA039	Undefined	32	FFFF 99D0$_H$	0	32	√	√	√	√	√	√	√	√	√
DMASS	DTS reload destination address	DTRDA039	Undefined	32	FFFF 99D4$_H$	0	32	√	√	√	√	√	√	√	√	√
DMASS	DTS reload transfer count	DTRTC039	Undefined	32	FFFF 99D8$_H$	0	32	√	√	√	√	√	√	√	√	√
DMASS	DTS transfer count compare	DTTCC039	Undefined	32	FFFF 99DC$_H$	0	32	√	√	√	√	√	√	√	√	√
DMASS	DTSFSL operation setting	DTFSL039	0000 0000$_H$	32	FFFF 99E0$_H$	0	32	√	√	√	√	√	√	√	√	√
DMASS	DTSFSL transfer request status	DTFST039	0000 0000$_H$	32	FFFF 99E4$_H$	0	32	√	√	√	√	√	√	√	√	√
DMASS	DTSFSL transfer request set	DTFSS039	0000 0000$_H$	32	FFFF 99E8$_H$	0	32	√	√	√	√	√	√	√	√	√
DMASS	DTSFSL transfer request clear	DTFSC039	0000 0000$_H$	32	FFFF 99EC$_H$	0	32	√	√	√	√	√	√	√	√	√
DMASS	DTS source address	DTSA040	Undefined	32	FFFF 9A00$_H$	0	32	√	√	√	√	√	√	√	√	√
DMASS	DTS destination address	DTDA040	Undefined	32	FFFF 9A04$_H$	0	32	√	√	√	√	√	√	√	√	√
DMASS	DTS transfer count	DTTC040	Undefined	32	FFFF 9A08$_H$	0	32	√	√	√	√	√	√	√	√	√
DMASS	DTS transfer control	DTTCT040	Undefined	32	FFFF 9A0C$_H$	0	32	√	√	√	√	√	√	√	√	√

Table A.1 List of Registers (91/124)

Module	Register	Symbol	Value after Reset	Number of Bits	Address	Peripheral IP group	Access Size	Reset Source*1							Access Authority*1	
								POCRES	CVMRES	EXTRES	DBRES	ECMRES	BISTRES	SWRES	SV	UM
DMASS	DTS reload source address	DTRSA040	Undefined	32	FFFF 9A10$_H$	0	32	√	√	√	√	√	√	√	√	√
DMASS	DTS reload destination address	DTRDA040	Undefined	32	FFFF 9A14$_H$	0	32	√	√	√	√	√	√	√	√	√
DMASS	DTS reload transfer count	DTRTC040	Undefined	32	FFFF 9A18$_H$	0	32	√	√	√	√	√	√	√	√	√
DMASS	DTS transfer count compare	DTTCC040	Undefined	32	FFFF 9A1C$_H$	0	32	√	√	√	√	√	√	√	√	√
DMASS	DTSFSL operation setting	DTFSL040	0000 0000$_H$	32	FFFF 9A20$_H$	0	32	√	√	√	√	√	√	√	√	√
DMASS	DTSFSL transfer request status	DTFST040	0000 0000$_H$	32	FFFF 9A24$_H$	0	32	√	√	√	√	√	√	√	√	√
DMASS	DTSFSL transfer request set	DTFSS040	0000 0000$_H$	32	FFFF 9A28$_H$	0	32	√	√	√	√	√	√	√	√	√
DMASS	DTSFSL transfer request clear	DTFSC040	0000 0000$_H$	32	FFFF 9A2C$_H$	0	32	√	√	√	√	√	√	√	√	√
DMASS	DTS source address	DTSA041	Undefined	32	FFFF 9A40$_H$	0	32	√	√	√	√	√	√	√	√	√
DMASS	DTS destination address	DTDA041	Undefined	32	FFFF 9A44$_H$	0	32	√	√	√	√	√	√	√	√	√
DMASS	DTS transfer count	DTTC041	Undefined	32	FFFF 9A48$_H$	0	32	√	√	√	√	√	√	√	√	√
DMASS	DTS transfer control	DTTCT041	Undefined	32	FFFF 9A4C$_H$	0	32	√	√	√	√	√	√	√	√	√
DMASS	DTS reload source address	DTRSA041	Undefined	32	FFFF 9A50$_H$	0	32	√	√	√	√	√	√	√	√	√
DMASS	DTS reload destination address	DTRDA041	Undefined	32	FFFF 9A54$_H$	0	32	√	√	√	√	√	√	√	√	√
DMASS	DTS reload transfer count	DTRTC041	Undefined	32	FFFF 9A58$_H$	0	32	√	√	√	√	√	√	√	√	√
DMASS	DTS transfer count compare	DTTCC041	Undefined	32	FFFF 9A5C$_H$	0	32	√	√	√	√	√	√	√	√	√
DMASS	DTSFSL operation setting	DTFSL041	0000 0000$_H$	32	FFFF 9A60$_H$	0	32	√	√	√	√	√	√	√	√	√
DMASS	DTSFSL transfer request status	DTFST041	0000 0000$_H$	32	FFFF 9A64$_H$	0	32	√	√	√	√	√	√	√	√	√
DMASS	DTSFSL transfer request set	DTFSS041	0000 0000$_H$	32	FFFF 9A68$_H$	0	32	√	√	√	√	√	√	√	√	√
DMASS	DTSFSL transfer request clear	DTFSC041	0000 0000$_H$	32	FFFF 9A6C$_H$	0	32	√	√	√	√	√	√	√	√	√
DMASS	DTS source address	DTSA042	Undefined	32	FFFF 9A80$_H$	0	32	√	√	√	√	√	√	√	√	√
DMASS	DTS destination address	DTDA042	Undefined	32	FFFF 9A84$_H$	0	32	√	√	√	√	√	√	√	√	√
DMASS	DTS transfer count	DTTC042	Undefined	32	FFFF 9A88$_H$	0	32	√	√	√	√	√	√	√	√	√
DMASS	DTS transfer control	DTTCT042	Undefined	32	FFFF 9A8C$_H$	0	32	√	√	√	√	√	√	√	√	√
DMASS	DTS reload source address	DTRSA042	Undefined	32	FFFF 9A90$_H$	0	32	√	√	√	√	√	√	√	√	√
DMASS	DTS reload destination address	DTRDA042	Undefined	32	FFFF 9A94$_H$	0	32	√	√	√	√	√	√	√	√	√
DMASS	DTS reload transfer count	DTRTC042	Undefined	32	FFFF 9A98$_H$	0	32	√	√	√	√	√	√	√	√	√
DMASS	DTS transfer count compare	DTTCC042	Undefined	32	FFFF 9A9C$_H$	0	32	√	√	√	√	√	√	√	√	√
DMASS	DTSFSL operation setting	DTFSL042	0000 0000$_H$	32	FFFF 9AA0$_H$	0	32	√	√	√	√	√	√	√	√	√
DMASS	DTSFSL transfer request status	DTFST042	0000 0000$_H$	32	FFFF 9AA4$_H$	0	32	√	√	√	√	√	√	√	√	√
DMASS	DTSFSL transfer request set	DTFSS042	0000 0000$_H$	32	FFFF 9AA8$_H$	0	32	√	√	√	√	√	√	√	√	√
DMASS	DTSFSL transfer request clear	DTFSC042	0000 0000$_H$	32	FFFF 9AAC$_H$	0	32	√	√	√	√	√	√	√	√	√
DMASS	DTS source address	DTSA043	Undefined	32	FFFF 9AC0$_H$	0	32	√	√	√	√	√	√	√	√	√
DMASS	DTS destination address	DTDA043	Undefined	32	FFFF 9AC4$_H$	0	32	√	√	√	√	√	√	√	√	√
DMASS	DTS transfer count	DTTC043	Undefined	32	FFFF 9AC8$_H$	0	32	√	√	√	√	√	√	√	√	√
DMASS	DTS transfer control	DTTCT043	Undefined	32	FFFF 9ACC$_H$	0	32	√	√	√	√	√	√	√	√	√
DMASS	DTS reload source address	DTRSA043	Undefined	32	FFFF 9AD0$_H$	0	32	√	√	√	√	√	√	√	√	√
DMASS	DTS reload destination address	DTRDA043	Undefined	32	FFFF 9AD4$_H$	0	32	√	√	√	√	√	√	√	√	√
DMASS	DTS reload transfer count	DTRTC043	Undefined	32	FFFF 9AD8$_H$	0	32	√	√	√	√	√	√	√	√	√
DMASS	DTS transfer count compare	DTTCC043	Undefined	32	FFFF 9ADC$_H$	0	32	√	√	√	√	√	√	√	√	√
DMASS	DTSFSL operation setting	DTFSL043	0000 0000$_H$	32	FFFF 9AE0$_H$	0	32	√	√	√	√	√	√	√	√	√
DMASS	DTSFSL transfer request status	DTFST043	0000 0000$_H$	32	FFFF 9AE4$_H$	0	32	√	√	√	√	√	√	√	√	√
DMASS	DTSFSL transfer request set	DTFSS043	0000 0000$_H$	32	FFFF 9AE8$_H$	0	32	√	√	√	√	√	√	√	√	√
DMASS	DTSFSL transfer request clear	DTFSC043	0000 0000$_H$	32	FFFF 9AEC$_H$	0	32	√	√	√	√	√	√	√	√	√
DMASS	DTS source address	DTSA044	Undefined	32	FFFF 9B00$_H$	0	32	√	√	√	√	√	√	√	√	√
DMASS	DTS destination address	DTDA044	Undefined	32	FFFF 9B04$_H$	0	32	√	√	√	√	√	√	√	√	√
DMASS	DTS transfer count	DTTC044	Undefined	32	FFFF 9B08$_H$	0	32	√	√	√	√	√	√	√	√	√
DMASS	DTS transfer control	DTTCT044	Undefined	32	FFFF 9B0C$_H$	0	32	√	√	√	√	√	√	√	√	√
DMASS	DTS reload source address	DTRSA044	Undefined	32	FFFF 9B10$_H$	0	32	√	√	√	√	√	√	√	√	√
DMASS	DTS reload destination address	DTRDA044	Undefined	32	FFFF 9B14$_H$	0	32	√	√	√	√	√	√	√	√	√
DMASS	DTS reload transfer count	DTRTC044	Undefined	32	FFFF 9B18$_H$	0	32	√	√	√	√	√	√	√	√	√
DMASS	DTS transfer count compare	DTTCC044	Undefined	32	FFFF 9B1C$_H$	0	32	√	√	√	√	√	√	√	√	√
DMASS	DTSFSL operation setting	DTFSL044	0000 0000$_H$	32	FFFF 9B20$_H$	0	32	√	√	√	√	√	√	√	√	√

Table A.1 List of Registers (92/124)

Module	Register	Symbol	Value after Reset	Number of Bits	Address	Peripheral IP group	Access Size	Reset Source*1							Access Authority*1	
								POCRES	CVMRES	EXTRES	DBRES	ECMRES	BISTRES	SWRES	SV	UM
DMASS	DTSFSL transfer request status	DTFST044	0000 0000$_H$	32	FFFF 9B24$_H$	0	32	√	√	√	√	√	√	√	√	√
DMASS	DTSFSL transfer request set	DTFSS044	0000 0000$_H$	32	FFFF 9B28$_H$	0	32	√	√	√	√	√	√	√	√	√
DMASS	DTSFSL transfer request clear	DTFSC044	0000 0000$_H$	32	FFFF 9B2C$_H$	0	32	√	√	√	√	√	√	√	√	√
DMASS	DTS source address	DTSA045	Undefined	32	FFFF 9B40$_H$	0	32	√	√	√	√	√	√	√	√	√
DMASS	DTS destination address	DTDA045	Undefined	32	FFFF 9B44$_H$	0	32	√	√	√	√	√	√	√	√	√
DMASS	DTS transfer count	DTTC045	Undefined	32	FFFF 9B48$_H$	0	32	√	√	√	√	√	√	√	√	√
DMASS	DTS transfer control	DTTCT045	Undefined	32	FFFF 9B4C$_H$	0	32	√	√	√	√	√	√	√	√	√
DMASS	DTS reload source address	DTRSA045	Undefined	32	FFFF 9B50$_H$	0	32	√	√	√	√	√	√	√	√	√
DMASS	DTS reload destination address	DTRDA045	Undefined	32	FFFF 9B54$_H$	0	32	√	√	√	√	√	√	√	√	√
DMASS	DTS reload transfer count	DTRTC045	Undefined	32	FFFF 9B58$_H$	0	32	√	√	√	√	√	√	√	√	√
DMASS	DTS transfer count compare	DTTCC045	Undefined	32	FFFF 9B5C$_H$	0	32	√	√	√	√	√	√	√	√	√
DMASS	DTSFSL operation setting	DTFSL045	0000 0000$_H$	32	FFFF 9B60$_H$	0	32	√	√	√	√	√	√	√	√	√
DMASS	DTSFSL transfer request status	DTFST045	0000 0000$_H$	32	FFFF 9B64$_H$	0	32	√	√	√	√	√	√	√	√	√
DMASS	DTSFSL transfer request set	DTFSS045	0000 0000$_H$	32	FFFF 9B68$_H$	0	32	√	√	√	√	√	√	√	√	√
DMASS	DTSFSL transfer request clear	DTFSC045	0000 0000$_H$	32	FFFF 9B6C$_H$	0	32	√	√	√	√	√	√	√	√	√
DMASS	DTS source address	DTSA046	Undefined	32	FFFF 9B80$_H$	0	32	√	√	√	√	√	√	√	√	√
DMASS	DTS destination address	DTDA046	Undefined	32	FFFF 9B84$_H$	0	32	√	√	√	√	√	√	√	√	√
DMASS	DTS transfer count	DTTC046	Undefined	32	FFFF 9B88$_H$	0	32	√	√	√	√	√	√	√	√	√
DMASS	DTS transfer control	DTTCT046	Undefined	32	FFFF 9B8C$_H$	0	32	√	√	√	√	√	√	√	√	√
DMASS	DTS reload source address	DTRSA046	Undefined	32	FFFF 9B90$_H$	0	32	√	√	√	√	√	√	√	√	√
DMASS	DTS reload destination address	DTRDA046	Undefined	32	FFFF 9B94$_H$	0	32	√	√	√	√	√	√	√	√	√
DMASS	DTS reload transfer count	DTRTC046	Undefined	32	FFFF 9B98$_H$	0	32	√	√	√	√	√	√	√	√	√
DMASS	DTS transfer count compare	DTTCC046	Undefined	32	FFFF 9B9C$_H$	0	32	√	√	√	√	√	√	√	√	√
DMASS	DTSFSL operation setting	DTFSL046	0000 0000$_H$	32	FFFF 9BA0$_H$	0	32	√	√	√	√	√	√	√	√	√
DMASS	DTSFSL transfer request status	DTFST046	0000 0000$_H$	32	FFFF 9BA4$_H$	0	32	√	√	√	√	√	√	√	√	√
DMASS	DTSFSL transfer request set	DTFSS046	0000 0000$_H$	32	FFFF 9BA8$_H$	0	32	√	√	√	√	√	√	√	√	√
DMASS	DTSFSL transfer request clear	DTFSC046	0000 0000$_H$	32	FFFF 9BAC$_H$	0	32	√	√	√	√	√	√	√	√	√
DMASS	DTS source address	DTSA047	Undefined	32	FFFF 9BC0$_H$	0	32	√	√	√	√	√	√	√	√	√
DMASS	DTS destination address	DTDA047	Undefined	32	FFFF 9BC4$_H$	0	32	√	√	√	√	√	√	√	√	√
DMASS	DTS transfer count	DTTC047	Undefined	32	FFFF 9BC8$_H$	0	32	√	√	√	√	√	√	√	√	√
DMASS	DTS transfer control	DTTCT047	Undefined	32	FFFF 9BCC$_H$	0	32	√	√	√	√	√	√	√	√	√
DMASS	DTS reload source address	DTRSA047	Undefined	32	FFFF 9BD0$_H$	0	32	√	√	√	√	√	√	√	√	√
DMASS	DTS reload destination address	DTRDA047	Undefined	32	FFFF 9BD4$_H$	0	32	√	√	√	√	√	√	√	√	√
DMASS	DTS reload transfer count	DTRTC047	Undefined	32	FFFF 9BD8$_H$	0	32	√	√	√	√	√	√	√	√	√
DMASS	DTS transfer count compare	DTTCC047	Undefined	32	FFFF 9BDC$_H$	0	32	√	√	√	√	√	√	√	√	√
DMASS	DTSFSL operation setting	DTFSL047	0000 0000$_H$	32	FFFF 9BE0$_H$	0	32	√	√	√	√	√	√	√	√	√
DMASS	DTSFSL transfer request status	DTFST047	0000 0000$_H$	32	FFFF 9BE4$_H$	0	32	√	√	√	√	√	√	√	√	√
DMASS	DTSFSL transfer request set	DTFSS047	0000 0000$_H$	32	FFFF 9BE8$_H$	0	32	√	√	√	√	√	√	√	√	√
DMASS	DTSFSL transfer request clear	DTFSC047	0000 0000$_H$	32	FFFF 9BEC$_H$	0	32	√	√	√	√	√	√	√	√	√
DMASS	DTS source address	DTSA048	Undefined	32	FFFF 9C00$_H$	0	32	√	√	√	√	√	√	√	√	√
DMASS	DTS destination address	DTDA048	Undefined	32	FFFF 9C04$_H$	0	32	√	√	√	√	√	√	√	√	√
DMASS	DTS transfer count	DTTC048	Undefined	32	FFFF 9C08$_H$	0	32	√	√	√	√	√	√	√	√	√
DMASS	DTS transfer control	DTTCT048	Undefined	32	FFFF 9C0C$_H$	0	32	√	√	√	√	√	√	√	√	√
DMASS	DTS reload source address	DTRSA048	Undefined	32	FFFF 9C10$_H$	0	32	√	√	√	√	√	√	√	√	√
DMASS	DTS reload destination address	DTRDA048	Undefined	32	FFFF 9C14$_H$	0	32	√	√	√	√	√	√	√	√	√
DMASS	DTS reload transfer count	DTRTC048	Undefined	32	FFFF 9C18$_H$	0	32	√	√	√	√	√	√	√	√	√
DMASS	DTS transfer count compare	DTTCC048	Undefined	32	FFFF 9C1C$_H$	0	32	√	√	√	√	√	√	√	√	√
DMASS	DTSFSL operation setting	DTFSL048	0000 0000$_H$	32	FFFF 9C20$_H$	0	32	√	√	√	√	√	√	√	√	√
DMASS	DTSFSL transfer request status	DTFST048	0000 0000$_H$	32	FFFF 9C24$_H$	0	32	√	√	√	√	√	√	√	√	√
DMASS	DTSFSL transfer request set	DTFSS048	0000 0000$_H$	32	FFFF 9C28$_H$	0	32	√	√	√	√	√	√	√	√	√
DMASS	DTSFSL transfer request clear	DTFSC048	0000 0000$_H$	32	FFFF 9C2C$_H$	0	32	√	√	√	√	√	√	√	√	√
DMASS	DTS source address	DTSA049	Undefined	32	FFFF 9C40$_H$	0	32	√	√	√	√	√	√	√	√	√
DMASS	DTS destination address	DTDA049	Undefined	32	FFFF 9C44$_H$	0	32	√	√	√	√	√	√	√	√	√

Table A.1 List of Registers (93/124)

Module	Register	Symbol	Value after Reset	Number of Bits	Address	Peripheral IP group	Access Size	Reset Source*1							Access Authority*1	
								POCRES	CVMRES	EXTRES	DBRES	ECMRES	BISTRES	SWRES	SV	UM
DMASS	DTS transfer count	DTTC049	Undefined	32	FFFF 9C48$_H$	0	32	√	√	√	√	√	√	√	√	√
DMASS	DTS transfer control	DTTCT049	Undefined	32	FFFF 9C4C$_H$	0	32	√	√	√	√	√	√	√	√	√
DMASS	DTS reload source address	DTRSA049	Undefined	32	FFFF 9C50$_H$	0	32	√	√	√	√	√	√	√	√	√
DMASS	DTS reload destination address	DTRDA049	Undefined	32	FFFF 9C54$_H$	0	32	√	√	√	√	√	√	√	√	√
DMASS	DTS reload transfer count	DTRTC049	Undefined	32	FFFF 9C58$_H$	0	32	√	√	√	√	√	√	√	√	√
DMASS	DTS transfer count compare	DTTCC049	Undefined	32	FFFF 9C5C$_H$	0	32	√	√	√	√	√	√	√	√	√
DMASS	DTSFSL operation setting	DTFSL049	0000 0000$_H$	32	FFFF 9C60$_H$	0	32	√	√	√	√	√	√	√	√	√
DMASS	DTSFSL transfer request status	DTFST049	0000 0000$_H$	32	FFFF 9C64$_H$	0	32	√	√	√	√	√	√	√	√	√
DMASS	DTSFSL transfer request set	DTFSS049	0000 0000$_H$	32	FFFF 9C68$_H$	0	32	√	√	√	√	√	√	√	√	√
DMASS	DTSFSL transfer request clear	DTFSC049	0000 0000$_H$	32	FFFF 9C6C$_H$	0	32	√	√	√	√	√	√	√	√	√
DMASS	DTS source address	DTSA050	Undefined	32	FFFF 9C80$_H$	0	32	√	√	√	√	√	√	√	√	√
DMASS	DTS destination address	DTDA050	Undefined	32	FFFF 9C84$_H$	0	32	√	√	√	√	√	√	√	√	√
DMASS	DTS transfer count	DTTC050	Undefined	32	FFFF 9C88$_H$	0	32	√	√	√	√	√	√	√	√	√
DMASS	DTS transfer control	DTTCT050	Undefined	32	FFFF 9C8C$_H$	0	32	√	√	√	√	√	√	√	√	√
DMASS	DTS reload source address	DTRSA050	Undefined	32	FFFF 9C90$_H$	0	32	√	√	√	√	√	√	√	√	√
DMASS	DTS reload destination address	DTRDA050	Undefined	32	FFFF 9C94$_H$	0	32	√	√	√	√	√	√	√	√	√
DMASS	DTS reload transfer count	DTRTC050	Undefined	32	FFFF 9C98$_H$	0	32	√	√	√	√	√	√	√	√	√
DMASS	DTS transfer count compare	DTTCC050	Undefined	32	FFFF 9C9C$_H$	0	32	√	√	√	√	√	√	√	√	√
DMASS	DTSFSL operation setting	DTFSL050	0000 0000$_H$	32	FFFF 9CA0$_H$	0	32	√	√	√	√	√	√	√	√	√
DMASS	DTSFSL transfer request status	DTFST050	0000 0000$_H$	32	FFFF 9CA4$_H$	0	32	√	√	√	√	√	√	√	√	√
DMASS	DTSFSL transfer request set	DTFSS050	0000 0000$_H$	32	FFFF 9CA8$_H$	0	32	√	√	√	√	√	√	√	√	√
DMASS	DTSFSL transfer request clear	DTFSC050	0000 0000$_H$	32	FFFF 9CAC$_H$	0	32	√	√	√	√	√	√	√	√	√
DMASS	DTS source address	DTSA051	Undefined	32	FFFF 9CC0$_H$	0	32	√	√	√	√	√	√	√	√	√
DMASS	DTS destination address	DTDA051	Undefined	32	FFFF 9CC4$_H$	0	32	√	√	√	√	√	√	√	√	√
DMASS	DTS transfer count	DTTC051	Undefined	32	FFFF 9CC8$_H$	0	32	√	√	√	√	√	√	√	√	√
DMASS	DTS transfer control	DTTCT051	Undefined	32	FFFF 9CCC$_H$	0	32	√	√	√	√	√	√	√	√	√
DMASS	DTS reload source address	DTRSA051	Undefined	32	FFFF 9CD0$_H$	0	32	√	√	√	√	√	√	√	√	√
DMASS	DTS reload destination address	DTRDA051	Undefined	32	FFFF 9CD4$_H$	0	32	√	√	√	√	√	√	√	√	√
DMASS	DTS reload transfer count	DTRTC051	Undefined	32	FFFF 9CD8$_H$	0	32	√	√	√	√	√	√	√	√	√
DMASS	DTS transfer count compare	DTTCC051	Undefined	32	FFFF 9CDC$_H$	0	32	√	√	√	√	√	√	√	√	√
DMASS	DTSFSL operation setting	DTFSL051	0000 0000$_H$	32	FFFF 9CE0$_H$	0	32	√	√	√	√	√	√	√	√	√
DMASS	DTSFSL transfer request status	DTFST051	0000 0000$_H$	32	FFFF 9CE4$_H$	0	32	√	√	√	√	√	√	√	√	√
DMASS	DTSFSL transfer request set	DTFSS051	0000 0000$_H$	32	FFFF 9CE8$_H$	0	32	√	√	√	√	√	√	√	√	√
DMASS	DTSFSL transfer request clear	DTFSC051	0000 0000$_H$	32	FFFF 9CEC$_H$	0	32	√	√	√	√	√	√	√	√	√
DMASS	DTS source address	DTSA052	Undefined	32	FFFF 9D00$_H$	0	32	√	√	√	√	√	√	√	√	√
DMASS	DTS destination address	DTDA052	Undefined	32	FFFF 9D04$_H$	0	32	√	√	√	√	√	√	√	√	√
DMASS	DTS transfer count	DTTC052	Undefined	32	FFFF 9D08$_H$	0	32	√	√	√	√	√	√	√	√	√
DMASS	DTS transfer control	DTTCT052	Undefined	32	FFFF 9D0C$_H$	0	32	√	√	√	√	√	√	√	√	√
DMASS	DTS reload source address	DTRSA052	Undefined	32	FFFF 9D10$_H$	0	32	√	√	√	√	√	√	√	√	√
DMASS	DTS reload destination address	DTRDA052	Undefined	32	FFFF 9D14$_H$	0	32	√	√	√	√	√	√	√	√	√
DMASS	DTS reload transfer count	DTRTC052	Undefined	32	FFFF 9D18$_H$	0	32	√	√	√	√	√	√	√	√	√
DMASS	DTS transfer count compare	DTTCC052	Undefined	32	FFFF 9D1C$_H$	0	32	√	√	√	√	√	√	√	√	√
DMASS	DTSFSL operation setting	DTFSL052	0000 0000$_H$	32	FFFF 9D20$_H$	0	32	√	√	√	√	√	√	√	√	√
DMASS	DTSFSL transfer request status	DTFST052	0000 0000$_H$	32	FFFF 9D24$_H$	0	32	√	√	√	√	√	√	√	√	√
DMASS	DTSFSL transfer request set	DTFSS052	0000 0000$_H$	32	FFFF 9D28$_H$	0	32	√	√	√	√	√	√	√	√	√
DMASS	DTSFSL transfer request clear	DTFSC052	0000 0000$_H$	32	FFFF 9D2C$_H$	0	32	√	√	√	√	√	√	√	√	√
DMASS	DTS source address	DTSA053	Undefined	32	FFFF 9D40$_H$	0	32	√	√	√	√	√	√	√	√	√
DMASS	DTS destination address	DTDA053	Undefined	32	FFFF 9D44$_H$	0	32	√	√	√	√	√	√	√	√	√
DMASS	DTS transfer count	DTTC053	Undefined	32	FFFF 9D48$_H$	0	32	√	√	√	√	√	√	√	√	√
DMASS	DTS transfer control	DTTCT053	Undefined	32	FFFF 9D4C$_H$	0	32	√	√	√	√	√	√	√	√	√
DMASS	DTS reload source address	DTRSA053	Undefined	32	FFFF 9D50$_H$	0	32	√	√	√	√	√	√	√	√	√
DMASS	DTS reload destination address	DTRDA053	Undefined	32	FFFF 9D54$_H$	0	32	√	√	√	√	√	√	√	√	√
DMASS	DTS reload transfer count	DTRTC053	Undefined	32	FFFF 9D58$_H$	0	32	√	√	√	√	√	√	√	√	√

Table A.1 List of Registers (94/124)

Module	Register	Symbol	Value after Reset	Number of Bits	Address	Peripheral IP group	Access Size	Reset Source*1							Access Authority*1	
								POCRES	CVMRES	EXTRES	DBRES	ECMRES	BISTRES	SWRES	SV	UM
DMASS	DTS transfer count compare	DTTCC053	Undefined	32	FFFF 9D5C$_H$	0	32	√	√	√	√	√	√	√	√	√
DMASS	DTSFSL operation setting	DTFSL053	0000 0000$_H$	32	FFFF 9D60$_H$	0	32	√	√	√	√	√	√	√	√	√
DMASS	DTSFSL transfer request status	DTFST053	0000 0000$_H$	32	FFFF 9D64$_H$	0	32	√	√	√	√	√	√	√	√	√
DMASS	DTSFSL transfer request set	DTFSS053	0000 0000$_H$	32	FFFF 9D68$_H$	0	32	√	√	√	√	√	√	√	√	√
DMASS	DTSFSL transfer request clear	DTFSC053	0000 0000$_H$	32	FFFF 9D6C$_H$	0	32	√	√	√	√	√	√	√	√	√
DMASS	DTS source address	DTSA054	Undefined	32	FFFF 9D80$_H$	0	32	√	√	√	√	√	√	√	√	√
DMASS	DTS destination address	DTDA054	Undefined	32	FFFF 9D84$_H$	0	32	√	√	√	√	√	√	√	√	√
DMASS	DTS transfer count	DTTC054	Undefined	32	FFFF 9D88$_H$	0	32	√	√	√	√	√	√	√	√	√
DMASS	DTS transfer control	DTTCT054	Undefined	32	FFFF 9D8C$_H$	0	32	√	√	√	√	√	√	√	√	√
DMASS	DTS reload source address	DTRSA054	Undefined	32	FFFF 9D90$_H$	0	32	√	√	√	√	√	√	√	√	√
DMASS	DTS reload destination address	DTRDA054	Undefined	32	FFFF 9D94$_H$	0	32	√	√	√	√	√	√	√	√	√
DMASS	DTS reload transfer count	DTRTC054	Undefined	32	FFFF 9D98$_H$	0	32	√	√	√	√	√	√	√	√	√
DMASS	DTS transfer count compare	DTTCC054	Undefined	32	FFFF 9D9C$_H$	0	32	√	√	√	√	√	√	√	√	√
DMASS	DTSFSL operation setting	DTFSL054	0000 0000$_H$	32	FFFF 9DA0$_H$	0	32	√	√	√	√	√	√	√	√	√
DMASS	DTSFSL transfer request status	DTFST054	0000 0000$_H$	32	FFFF 9DA4$_H$	0	32	√	√	√	√	√	√	√	√	√
DMASS	DTSFSL transfer request set	DTFSS054	0000 0000$_H$	32	FFFF 9DA8$_H$	0	32	√	√	√	√	√	√	√	√	√
DMASS	DTSFSL transfer request clear	DTFSC054	0000 0000$_H$	32	FFFF 9DAC$_H$	0	32	√	√	√	√	√	√	√	√	√
DMASS	DTS source address	DTSA055	Undefined	32	FFFF 9DC0$_H$	0	32	√	√	√	√	√	√	√	√	√
DMASS	DTS destination address	DTDA055	Undefined	32	FFFF 9DC4$_H$	0	32	√	√	√	√	√	√	√	√	√
DMASS	DTS transfer count	DTTC055	Undefined	32	FFFF 9DC8$_H$	0	32	√	√	√	√	√	√	√	√	√
DMASS	DTS transfer control	DTTCT055	Undefined	32	FFFF 9DCC$_H$	0	32	√	√	√	√	√	√	√	√	√
DMASS	DTS reload source address	DTRSA055	Undefined	32	FFFF 9DD0$_H$	0	32	√	√	√	√	√	√	√	√	√
DMASS	DTS reload destination address	DTRDA055	Undefined	32	FFFF 9DD4$_H$	0	32	√	√	√	√	√	√	√	√	√
DMASS	DTS reload transfer count	DTRTC055	Undefined	32	FFFF 9DD8$_H$	0	32	√	√	√	√	√	√	√	√	√
DMASS	DTS transfer count compare	DTTCC055	Undefined	32	FFFF 9DDC$_H$	0	32	√	√	√	√	√	√	√	√	√
DMASS	DTSFSL operation setting	DTFSL055	0000 0000$_H$	32	FFFF 9DE0$_H$	0	32	√	√	√	√	√	√	√	√	√
DMASS	DTSFSL transfer request status	DTFST055	0000 0000$_H$	32	FFFF 9DE4$_H$	0	32	√	√	√	√	√	√	√	√	√
DMASS	DTSFSL transfer request set	DTFSS055	0000 0000$_H$	32	FFFF 9DE8$_H$	0	32	√	√	√	√	√	√	√	√	√
DMASS	DTSFSL transfer request clear	DTFSC055	0000 0000$_H$	32	FFFF 9DEC$_H$	0	32	√	√	√	√	√	√	√	√	√
DMASS	DTS source address	DTSA056	Undefined	32	FFFF 9E00$_H$	0	32	√	√	√	√	√	√	√	√	√
DMASS	DTS destination address	DTDA056	Undefined	32	FFFF 9E04$_H$	0	32	√	√	√	√	√	√	√	√	√
DMASS	DTS transfer count	DTTC056	Undefined	32	FFFF 9E08$_H$	0	32	√	√	√	√	√	√	√	√	√
DMASS	DTS transfer control	DTTCT056	Undefined	32	FFFF 9E0C$_H$	0	32	√	√	√	√	√	√	√	√	√
DMASS	DTS reload source address	DTRSA056	Undefined	32	FFFF 9E10$_H$	0	32	√	√	√	√	√	√	√	√	√
DMASS	DTS reload destination address	DTRDA056	Undefined	32	FFFF 9E14$_H$	0	32	√	√	√	√	√	√	√	√	√
DMASS	DTS reload transfer count	DTRTC056	Undefined	32	FFFF 9E18$_H$	0	32	√	√	√	√	√	√	√	√	√
DMASS	DTS transfer count compare	DTTCC056	Undefined	32	FFFF 9E1C$_H$	0	32	√	√	√	√	√	√	√	√	√
DMASS	DTSFSL operation setting	DTFSL056	0000 0000$_H$	32	FFFF 9E20$_H$	0	32	√	√	√	√	√	√	√	√	√
DMASS	DTSFSL transfer request status	DTFST056	0000 0000$_H$	32	FFFF 9E24$_H$	0	32	√	√	√	√	√	√	√	√	√
DMASS	DTSFSL transfer request set	DTFSS056	0000 0000$_H$	32	FFFF 9E28$_H$	0	32	√	√	√	√	√	√	√	√	√
DMASS	DTSFSL transfer request clear	DTFSC056	0000 0000$_H$	32	FFFF 9E2C$_H$	0	32	√	√	√	√	√	√	√	√	√
DMASS	DTS source address	DTSA057	Undefined	32	FFFF 9E40$_H$	0	32	√	√	√	√	√	√	√	√	√
DMASS	DTS destination address	DTDA057	Undefined	32	FFFF 9E44$_H$	0	32	√	√	√	√	√	√	√	√	√
DMASS	DTS transfer count	DTTC057	Undefined	32	FFFF 9E48$_H$	0	32	√	√	√	√	√	√	√	√	√
DMASS	DTS transfer control	DTTCT057	Undefined	32	FFFF 9E4C$_H$	0	32	√	√	√	√	√	√	√	√	√
DMASS	DTS reload source address	DTRSA057	Undefined	32	FFFF 9E50$_H$	0	32	√	√	√	√	√	√	√	√	√
DMASS	DTS reload destination address	DTRDA057	Undefined	32	FFFF 9E54$_H$	0	32	√	√	√	√	√	√	√	√	√
DMASS	DTS reload transfer count	DTRTC057	Undefined	32	FFFF 9E58$_H$	0	32	√	√	√	√	√	√	√	√	√
DMASS	DTS transfer count compare	DTTCC057	Undefined	32	FFFF 9E5C$_H$	0	32	√	√	√	√	√	√	√	√	√
DMASS	DTSFSL operation setting	DTFSL057	0000 0000$_H$	32	FFFF 9E60$_H$	0	32	√	√	√	√	√	√	√	√	√
DMASS	DTSFSL transfer request status	DTFST057	0000 0000$_H$	32	FFFF 9E64$_H$	0	32	√	√	√	√	√	√	√	√	√
DMASS	DTSFSL transfer request set	DTFSS057	0000 0000$_H$	32	FFFF 9E68$_H$	0	32	√	√	√	√	√	√	√	√	√
DMASS	DTSFSL transfer request clear	DTFSC057	0000 0000$_H$	32	FFFF 9E6C$_H$	0	32	√	√	√	√	√	√	√	√	√

Table A.1 List of Registers (95/124)

Module	Register	Symbol	Value after Reset	Number of Bits	Address	Peripheral IP group	Access Size	Reset Source*1							Access Authority*1	
								POCRES	CVMRES	EXTRES	DBRES	ECMRES	BISTRES	SWRES	SV	UM
DMASS	DTS source address	DTSA058	Undefined	32	FFFF 9E80$_H$	0	32	√	√	√	√	√	√	√	√	√
DMASS	DTS destination address	DTDA058	Undefined	32	FFFF 9E84$_H$	0	32	√	√	√	√	√	√	√	√	√
DMASS	DTS transfer count	DTTC058	Undefined	32	FFFF 9E88$_H$	0	32	√	√	√	√	√	√	√	√	√
DMASS	DTS transfer control	DTTCT058	Undefined	32	FFFF 9E8C$_H$	0	32	√	√	√	√	√	√	√	√	√
DMASS	DTS reload source address	DTRSA058	Undefined	32	FFFF 9E90$_H$	0	32	√	√	√	√	√	√	√	√	√
DMASS	DTS reload destination address	DTRDA058	Undefined	32	FFFF 9E94$_H$	0	32	√	√	√	√	√	√	√	√	√
DMASS	DTS reload transfer count	DTRTC058	Undefined	32	FFFF 9E98$_H$	0	32	√	√	√	√	√	√	√	√	√
DMASS	DTS transfer count compare	DTTCC058	Undefined	32	FFFF 9E9C$_H$	0	32	√	√	√	√	√	√	√	√	√
DMASS	DTSFSL operation setting	DTFSL058	0000 0000$_H$	32	FFFF 9EA0$_H$	0	32	√	√	√	√	√	√	√	√	√
DMASS	DTSFSL transfer request status	DTFST058	0000 0000$_H$	32	FFFF 9EA4$_H$	0	32	√	√	√	√	√	√	√	√	√
DMASS	DTSFSL transfer request set	DTFSS058	0000 0000$_H$	32	FFFF 9EA8$_H$	0	32	√	√	√	√	√	√	√	√	√
DMASS	DTSFSL transfer request clear	DTFSC058	0000 0000$_H$	32	FFFF 9EAC$_H$	0	32	√	√	√	√	√	√	√	√	√
DMASS	DTS source address	DTSA059	Undefined	32	FFFF 9EC0$_H$	0	32	√	√	√	√	√	√	√	√	√
DMASS	DTS destination address	DTDA059	Undefined	32	FFFF 9EC4$_H$	0	32	√	√	√	√	√	√	√	√	√
DMASS	DTS transfer count	DTTC059	Undefined	32	FFFF 9EC8$_H$	0	32	√	√	√	√	√	√	√	√	√
DMASS	DTS transfer control	DTTCT059	Undefined	32	FFFF 9ECC$_H$	0	32	√	√	√	√	√	√	√	√	√
DMASS	DTS reload source address	DTRSA059	Undefined	32	FFFF 9ED0$_H$	0	32	√	√	√	√	√	√	√	√	√
DMASS	DTS reload destination address	DTRDA059	Undefined	32	FFFF 9ED4$_H$	0	32	√	√	√	√	√	√	√	√	√
DMASS	DTS reload transfer count	DTRTC059	Undefined	32	FFFF 9ED8$_H$	0	32	√	√	√	√	√	√	√	√	√
DMASS	DTS transfer count compare	DTTCC059	Undefined	32	FFFF 9EDC$_H$	0	32	√	√	√	√	√	√	√	√	√
DMASS	DTSFSL operation setting	DTFSL059	0000 0000$_H$	32	FFFF 9EE0$_H$	0	32	√	√	√	√	√	√	√	√	√
DMASS	DTSFSL transfer request status	DTFST059	0000 0000$_H$	32	FFFF 9EE4$_H$	0	32	√	√	√	√	√	√	√	√	√
DMASS	DTSFSL transfer request set	DTFSS059	0000 0000$_H$	32	FFFF 9EE8$_H$	0	32	√	√	√	√	√	√	√	√	√
DMASS	DTSFSL transfer request clear	DTFSC059	0000 0000$_H$	32	FFFF 9EEC$_H$	0	32	√	√	√	√	√	√	√	√	√
DMASS	DTS source address	DTSA060	Undefined	32	FFFF 9F00$_H$	0	32	√	√	√	√	√	√	√	√	√
DMASS	DTS destination address	DTDA060	Undefined	32	FFFF 9F04$_H$	0	32	√	√	√	√	√	√	√	√	√
DMASS	DTS transfer count	DTTC060	Undefined	32	FFFF 9F08$_H$	0	32	√	√	√	√	√	√	√	√	√
DMASS	DTS transfer control	DTTCT060	Undefined	32	FFFF 9F0C$_H$	0	32	√	√	√	√	√	√	√	√	√
DMASS	DTS reload source address	DTRSA060	Undefined	32	FFFF 9F10$_H$	0	32	√	√	√	√	√	√	√	√	√
DMASS	DTS reload destination address	DTRDA060	Undefined	32	FFFF 9F14$_H$	0	32	√	√	√	√	√	√	√	√	√
DMASS	DTS reload transfer count	DTRTC060	Undefined	32	FFFF 9F18$_H$	0	32	√	√	√	√	√	√	√	√	√
DMASS	DTS transfer count compare	DTTCC060	Undefined	32	FFFF 9F1C$_H$	0	32	√	√	√	√	√	√	√	√	√
DMASS	DTSFSL operation setting	DTFSL060	0000 0000$_H$	32	FFFF 9F20$_H$	0	32	√	√	√	√	√	√	√	√	√
DMASS	DTSFSL transfer request status	DTFST060	0000 0000$_H$	32	FFFF 9F24$_H$	0	32	√	√	√	√	√	√	√	√	√
DMASS	DTSFSL transfer request set	DTFSS060	0000 0000$_H$	32	FFFF 9F28$_H$	0	32	√	√	√	√	√	√	√	√	√
DMASS	DTSFSL transfer request clear	DTFSC060	0000 0000$_H$	32	FFFF 9F2C$_H$	0	32	√	√	√	√	√	√	√	√	√
DMASS	DTS source address	DTSA061	Undefined	32	FFFF 9F40$_H$	0	32	√	√	√	√	√	√	√	√	√
DMASS	DTS destination address	DTDA061	Undefined	32	FFFF 9F44$_H$	0	32	√	√	√	√	√	√	√	√	√
DMASS	DTS transfer count	DTTC061	Undefined	32	FFFF 9F48$_H$	0	32	√	√	√	√	√	√	√	√	√
DMASS	DTS transfer control	DTTCT061	Undefined	32	FFFF 9F4C$_H$	0	32	√	√	√	√	√	√	√	√	√
DMASS	DTS reload source address	DTRSA061	Undefined	32	FFFF 9F50$_H$	0	32	√	√	√	√	√	√	√	√	√
DMASS	DTS reload destination address	DTRDA061	Undefined	32	FFFF 9F54$_H$	0	32	√	√	√	√	√	√	√	√	√
DMASS	DTS reload transfer count	DTRTC061	Undefined	32	FFFF 9F58$_H$	0	32	√	√	√	√	√	√	√	√	√
DMASS	DTS transfer count compare	DTTCC061	Undefined	32	FFFF 9F5C$_H$	0	32	√	√	√	√	√	√	√	√	√
DMASS	DTSFSL operation setting	DTFSL061	0000 0000$_H$	32	FFFF 9F60$_H$	0	32	√	√	√	√	√	√	√	√	√
DMASS	DTSFSL transfer request status	DTFST061	0000 0000$_H$	32	FFFF 9F64$_H$	0	32	√	√	√	√	√	√	√	√	√
DMASS	DTSFSL transfer request set	DTFSS061	0000 0000$_H$	32	FFFF 9F68$_H$	0	32	√	√	√	√	√	√	√	√	√
DMASS	DTSFSL transfer request clear	DTFSC061	0000 0000$_H$	32	FFFF 9F6C$_H$	0	32	√	√	√	√	√	√	√	√	√
DMASS	DTS source address	DTSA062	Undefined	32	FFFF 9F80$_H$	0	32	√	√	√	√	√	√	√	√	√
DMASS	DTS destination address	DTDA062	Undefined	32	FFFF 9F84$_H$	0	32	√	√	√	√	√	√	√	√	√
DMASS	DTS transfer count	DTTC062	Undefined	32	FFFF 9F88$_H$	0	32	√	√	√	√	√	√	√	√	√
DMASS	DTS transfer control	DTTCT062	Undefined	32	FFFF 9F8C$_H$	0	32	√	√	√	√	√	√	√	√	√
DMASS	DTS reload source address	DTRSA062	Undefined	32	FFFF 9F90$_H$	0	32	√	√	√	√	√	√	√	√	√

Table A.1 List of Registers (96/124)

Module	Register	Symbol	Value after Reset	Number of Bits	Address	Peripheral IP group	Access Size	Reset Source*1							Access Authority*1	
								POCRES	CVMRES	EXTRES	DBRES	ECMRES	BISTRES	SWRES	SV	UM
DMASS	DTS reload destination address	DTRDA062	Undefined	32	FFFF 9F94$_H$	0	32	√	√	√	√	√	√	√	√	√
DMASS	DTS reload transfer count	DTRTC062	Undefined	32	FFFF 9F98$_H$	0	32	√	√	√	√	√	√	√	√	√
DMASS	DTS transfer count compare	DTTCC062	Undefined	32	FFFF 9F9C$_H$	0	32	√	√	√	√	√	√	√	√	√
DMASS	DTSFSL operation setting	DTFSL062	0000 0000$_H$	32	FFFF 9FA0$_H$	0	32	√	√	√	√	√	√	√	√	√
DMASS	DTSFSL transfer request status	DTFST062	0000 0000$_H$	32	FFFF 9FA4$_H$	0	32	√	√	√	√	√	√	√	√	√
DMASS	DTSFSL transfer request set	DTFSS062	0000 0000$_H$	32	FFFF 9FA8$_H$	0	32	√	√	√	√	√	√	√	√	√
DMASS	DTSFSL transfer request clear	DTFSC062	0000 0000$_H$	32	FFFF 9FAC$_H$	0	32	√	√	√	√	√	√	√	√	√
DMASS	DTS source address	DTSA063	Undefined	32	FFFF 9FC0$_H$	0	32	√	√	√	√	√	√	√	√	√
DMASS	DTS destination address	DTDA063	Undefined	32	FFFF 9FC4$_H$	0	32	√	√	√	√	√	√	√	√	√
DMASS	DTS transfer count	DTTC063	Undefined	32	FFFF 9FC8$_H$	0	32	√	√	√	√	√	√	√	√	√
DMASS	DTS transfer control	DTTCT063	Undefined	32	FFFF 9FCC$_H$	0	32	√	√	√	√	√	√	√	√	√
DMASS	DTS reload source address	DTRSA063	Undefined	32	FFFF 9FD0$_H$	0	32	√	√	√	√	√	√	√	√	√
DMASS	DTS reload destination address	DTRDA063	Undefined	32	FFFF 9FD4$_H$	0	32	√	√	√	√	√	√	√	√	√
DMASS	DTS reload transfer count	DTRTC063	Undefined	32	FFFF 9FD8$_H$	0	32	√	√	√	√	√	√	√	√	√
DMASS	DTS transfer count compare	DTTCC063	Undefined	32	FFFF 9FDC$_H$	0	32	√	√	√	√	√	√	√	√	√
DMASS	DTSFSL operation setting	DTFSL063	0000 0000$_H$	32	FFFF 9FE0$_H$	0	32	√	√	√	√	√	√	√	√	√
DMASS	DTSFSL transfer request status	DTFST063	0000 0000$_H$	32	FFFF 9FE4$_H$	0	32	√	√	√	√	√	√	√	√	√
DMASS	DTSFSL transfer request set	DTFSS063	0000 0000$_H$	32	FFFF 9FE8$_H$	0	32	√	√	√	√	√	√	√	√	√
DMASS	DTSFSL transfer request clear	DTFSC063	0000 0000$_H$	32	FFFF 9FEC$_H$	0	32	√	√	√	√	√	√	√	√	√
DMASS	DTS source address	DTSA064	Undefined	32	FFFF A000$_H$	0	32	√	√	√	√	√	√	√	√	√
DMASS	DTS destination address	DTDA064	Undefined	32	FFFF A004$_H$	0	32	√	√	√	√	√	√	√	√	√
DMASS	DTS transfer count	DTTC064	Undefined	32	FFFF A008$_H$	0	32	√	√	√	√	√	√	√	√	√
DMASS	DTS transfer control	DTTCT064	Undefined	32	FFFF A00C$_H$	0	32	√	√	√	√	√	√	√	√	√
DMASS	DTS reload source address	DTRSA064	Undefined	32	FFFF A010$_H$	0	32	√	√	√	√	√	√	√	√	√
DMASS	DTS reload destination address	DTRDA064	Undefined	32	FFFF A014$_H$	0	32	√	√	√	√	√	√	√	√	√
DMASS	DTS reload transfer count	DTRTC064	Undefined	32	FFFF A018$_H$	0	32	√	√	√	√	√	√	√	√	√
DMASS	DTS transfer count compare	DTTCC064	Undefined	32	FFFF A01C$_H$	0	32	√	√	√	√	√	√	√	√	√
DMASS	DTSFSL operation setting	DTFSL064	0000 0000$_H$	32	FFFF A020$_H$	0	32	√	√	√	√	√	√	√	√	√
DMASS	DTSFSL transfer request status	DTFST064	0000 0000$_H$	32	FFFF A024$_H$	0	32	√	√	√	√	√	√	√	√	√
DMASS	DTSFSL transfer request set	DTFSS064	0000 0000$_H$	32	FFFF A028$_H$	0	32	√	√	√	√	√	√	√	√	√
DMASS	DTSFSL transfer request clear	DTFSC064	0000 0000$_H$	32	FFFF A02C$_H$	0	32	√	√	√	√	√	√	√	√	√
DMASS	DTS source address	DTSA065	Undefined	32	FFFF A040$_H$	0	32	√	√	√	√	√	√	√	√	√
DMASS	DTS destination address	DTDA065	Undefined	32	FFFF A044$_H$	0	32	√	√	√	√	√	√	√	√	√
DMASS	DTS transfer count	DTTC065	Undefined	32	FFFF A048$_H$	0	32	√	√	√	√	√	√	√	√	√
DMASS	DTS transfer control	DTTCT065	Undefined	32	FFFF A04C$_H$	0	32	√	√	√	√	√	√	√	√	√
DMASS	DTS reload source address	DTRSA065	Undefined	32	FFFF A050$_H$	0	32	√	√	√	√	√	√	√	√	√
DMASS	DTS reload destination address	DTRDA065	Undefined	32	FFFF A054$_H$	0	32	√	√	√	√	√	√	√	√	√
DMASS	DTS reload transfer count	DTRTC065	Undefined	32	FFFF A058$_H$	0	32	√	√	√	√	√	√	√	√	√
DMASS	DTS transfer count compare	DTTCC065	Undefined	32	FFFF A05C$_H$	0	32	√	√	√	√	√	√	√	√	√
DMASS	DTSFSL operation setting	DTFSL065	0000 0000$_H$	32	FFFF A060$_H$	0	32	√	√	√	√	√	√	√	√	√
DMASS	DTSFSL transfer request status	DTFST065	0000 0000$_H$	32	FFFF A064$_H$	0	32	√	√	√	√	√	√	√	√	√
DMASS	DTSFSL transfer request set	DTFSS065	0000 0000$_H$	32	FFFF A068$_H$	0	32	√	√	√	√	√	√	√	√	√
DMASS	DTSFSL transfer request clear	DTFSC065	0000 0000$_H$	32	FFFF A06C$_H$	0	32	√	√	√	√	√	√	√	√	√
DMASS	DTS source address	DTSA066	Undefined	32	FFFF A080$_H$	0	32	√	√	√	√	√	√	√	√	√
DMASS	DTS destination address	DTDA066	Undefined	32	FFFF A084$_H$	0	32	√	√	√	√	√	√	√	√	√
DMASS	DTS transfer count	DTTC066	Undefined	32	FFFF A088$_H$	0	32	√	√	√	√	√	√	√	√	√
DMASS	DTS transfer control	DTTCT066	Undefined	32	FFFF A08C$_H$	0	32	√	√	√	√	√	√	√	√	√
DMASS	DTS reload source address	DTRSA066	Undefined	32	FFFF A090$_H$	0	32	√	√	√	√	√	√	√	√	√
DMASS	DTS reload destination address	DTRDA066	Undefined	32	FFFF A094$_H$	0	32	√	√	√	√	√	√	√	√	√
DMASS	DTS reload transfer count	DTRTC066	Undefined	32	FFFF A098$_H$	0	32	√	√	√	√	√	√	√	√	√
DMASS	DTS transfer count compare	DTTCC066	Undefined	32	FFFF A09C$_H$	0	32	√	√	√	√	√	√	√	√	√
DMASS	DTSFSL operation setting	DTFSL066	0000 0000$_H$	32	FFFF A0A0$_H$	0	32	√	√	√	√	√	√	√	√	√
DMASS	DTSFSL transfer request status	DTFST066	0000 0000$_H$	32	FFFF A0A4$_H$	0	32	√	√	√	√	√	√	√	√	√

Table A.1 List of Registers (97/124)

Module	Register	Symbol	Value after Reset	Number of Bits	Address	Peripheral IP group	Access Size	Reset Source*1							Access Authority*1	
								POCRES	CVMRES	EXTRES	DBRES	ECMRES	BISTRES	SWRES	SV	UM
DMASS	DTSFSL transfer request set	DTFSS066	0000 0000$_H$	32	FFFF A0A8$_H$	0	32	√	√	√	√	√	√	√	√	√
DMASS	DTSFSL transfer request clear	DTFSC066	0000 0000$_H$	32	FFFF A0AC$_H$	0	32	√	√	√	√	√	√	√	√	√
DMASS	DTS source address	DTSA067	Undefined	32	FFFF A0C0$_H$	0	32	√	√	√	√	√	√	√	√	√
DMASS	DTS destination address	DTDA067	Undefined	32	FFFF A0C4$_H$	0	32	√	√	√	√	√	√	√	√	√
DMASS	DTS transfer count	DTTC067	Undefined	32	FFFF A0C8$_H$	0	32	√	√	√	√	√	√	√	√	√
DMASS	DTS transfer control	DTTCT067	Undefined	32	FFFF A0CC$_H$	0	32	√	√	√	√	√	√	√	√	√
DMASS	DTS reload source address	DTRSA067	Undefined	32	FFFF A0D0$_H$	0	32	√	√	√	√	√	√	√	√	√
DMASS	DTS reload destination address	DTRDA067	Undefined	32	FFFF A0D4$_H$	0	32	√	√	√	√	√	√	√	√	√
DMASS	DTS reload transfer count	DTRTC067	Undefined	32	FFFF A0D8$_H$	0	32	√	√	√	√	√	√	√	√	√
DMASS	DTS transfer count compare	DTTCC067	Undefined	32	FFFF A0DC$_H$	0	32	√	√	√	√	√	√	√	√	√
DMASS	DTSFSL operation setting	DTFSL067	0000 0000$_H$	32	FFFF A0E0$_H$	0	32	√	√	√	√	√	√	√	√	√
DMASS	DTSFSL transfer request status	DTFST067	0000 0000$_H$	32	FFFF A0E4$_H$	0	32	√	√	√	√	√	√	√	√	√
DMASS	DTSFSL transfer request set	DTFSS067	0000 0000$_H$	32	FFFF A0E8$_H$	0	32	√	√	√	√	√	√	√	√	√
DMASS	DTSFSL transfer request clear	DTFSC067	0000 0000$_H$	32	FFFF A0EC$_H$	0	32	√	√	√	√	√	√	√	√	√
DMASS	DTS source address	DTSA068	Undefined	32	FFFF A100$_H$	0	32	√	√	√	√	√	√	√	√	√
DMASS	DTS destination address	DTDA068	Undefined	32	FFFF A104$_H$	0	32	√	√	√	√	√	√	√	√	√
DMASS	DTS transfer count	DTTC068	Undefined	32	FFFF A108$_H$	0	32	√	√	√	√	√	√	√	√	√
DMASS	DTS transfer control	DTTCT068	Undefined	32	FFFF A10C$_H$	0	32	√	√	√	√	√	√	√	√	√
DMASS	DTS reload source address	DTRSA068	Undefined	32	FFFF A110$_H$	0	32	√	√	√	√	√	√	√	√	√
DMASS	DTS reload destination address	DTRDA068	Undefined	32	FFFF A114$_H$	0	32	√	√	√	√	√	√	√	√	√
DMASS	DTS reload transfer count	DTRTC068	Undefined	32	FFFF A118$_H$	0	32	√	√	√	√	√	√	√	√	√
DMASS	DTS transfer count compare	DTTCC068	Undefined	32	FFFF A11C$_H$	0	32	√	√	√	√	√	√	√	√	√
DMASS	DTSFSL operation setting	DTFSL068	0000 0000$_H$	32	FFFF A120$_H$	0	32	√	√	√	√	√	√	√	√	√
DMASS	DTSFSL transfer request status	DTFST068	0000 0000$_H$	32	FFFF A124$_H$	0	32	√	√	√	√	√	√	√	√	√
DMASS	DTSFSL transfer request set	DTFSS068	0000 0000$_H$	32	FFFF A128$_H$	0	32	√	√	√	√	√	√	√	√	√
DMASS	DTSFSL transfer request clear	DTFSC068	0000 0000$_H$	32	FFFF A12C$_H$	0	32	√	√	√	√	√	√	√	√	√
DMASS	DTS source address	DTSA069	Undefined	32	FFFF A140$_H$	0	32	√	√	√	√	√	√	√	√	√
DMASS	DTS destination address	DTDA069	Undefined	32	FFFF A144$_H$	0	32	√	√	√	√	√	√	√	√	√
DMASS	DTS transfer count	DTTC069	Undefined	32	FFFF A148$_H$	0	32	√	√	√	√	√	√	√	√	√
DMASS	DTS transfer control	DTTCT069	Undefined	32	FFFF A14C$_H$	0	32	√	√	√	√	√	√	√	√	√
DMASS	DTS reload source address	DTRSA069	Undefined	32	FFFF A150$_H$	0	32	√	√	√	√	√	√	√	√	√
DMASS	DTS reload destination address	DTRDA069	Undefined	32	FFFF A154$_H$	0	32	√	√	√	√	√	√	√	√	√
DMASS	DTS reload transfer count	DTRTC069	Undefined	32	FFFF A158$_H$	0	32	√	√	√	√	√	√	√	√	√
DMASS	DTS transfer count compare	DTTCC069	Undefined	32	FFFF A15C$_H$	0	32	√	√	√	√	√	√	√	√	√
DMASS	DTSFSL operation setting	DTFSL069	0000 0000$_H$	32	FFFF A160$_H$	0	32	√	√	√	√	√	√	√	√	√
DMASS	DTSFSL transfer request status	DTFST069	0000 0000$_H$	32	FFFF A164$_H$	0	32	√	√	√	√	√	√	√	√	√
DMASS	DTSFSL transfer request set	DTFSS069	0000 0000$_H$	32	FFFF A168$_H$	0	32	√	√	√	√	√	√	√	√	√
DMASS	DTSFSL transfer request clear	DTFSC069	0000 0000$_H$	32	FFFF A16C$_H$	0	32	√	√	√	√	√	√	√	√	√
DMASS	DTS source address	DTSA070	Undefined	32	FFFF A180$_H$	0	32	√	√	√	√	√	√	√	√	√
DMASS	DTS destination address	DTDA070	Undefined	32	FFFF A184$_H$	0	32	√	√	√	√	√	√	√	√	√
DMASS	DTS transfer count	DTTC070	Undefined	32	FFFF A188$_H$	0	32	√	√	√	√	√	√	√	√	√
DMASS	DTS transfer control	DTTCT070	Undefined	32	FFFF A18C$_H$	0	32	√	√	√	√	√	√	√	√	√
DMASS	DTS reload source address	DTRSA070	Undefined	32	FFFF A190$_H$	0	32	√	√	√	√	√	√	√	√	√
DMASS	DTS reload destination address	DTRDA070	Undefined	32	FFFF A194$_H$	0	32	√	√	√	√	√	√	√	√	√
DMASS	DTS reload transfer count	DTRTC070	Undefined	32	FFFF A198$_H$	0	32	√	√	√	√	√	√	√	√	√
DMASS	DTS transfer count compare	DTTCC070	Undefined	32	FFFF A19C$_H$	0	32	√	√	√	√	√	√	√	√	√
DMASS	DTSFSL operation setting	DTFSL070	0000 0000$_H$	32	FFFF A1A0$_H$	0	32	√	√	√	√	√	√	√	√	√
DMASS	DTSFSL transfer request status	DTFST070	0000 0000$_H$	32	FFFF A1A4$_H$	0	32	√	√	√	√	√	√	√	√	√
DMASS	DTSFSL transfer request set	DTFSS070	0000 0000$_H$	32	FFFF A1A8$_H$	0	32	√	√	√	√	√	√	√	√	√
DMASS	DTSFSL transfer request clear	DTFSC070	0000 0000$_H$	32	FFFF A1AC$_H$	0	32	√	√	√	√	√	√	√	√	√
DMASS	DTS source address	DTSA071	Undefined	32	FFFF A1C0$_H$	0	32	√	√	√	√	√	√	√	√	√
DMASS	DTS destination address	DTDA071	Undefined	32	FFFF A1C4$_H$	0	32	√	√	√	√	√	√	√	√	√
DMASS	DTS transfer count	DTTC071	Undefined	32	FFFF A1C8$_H$	0	32	√	√	√	√	√	√	√	√	√

Table A.1 List of Registers (98/124)

Module	Register	Symbol	Value after Reset	Number of Bits	Address	Peripheral IP group	Access Size	Reset Source*1							Access Authority*1	
								POCRES	CVMRES	EXTRES	DBRES	ECMRES	BISTRES	SWRES	SV	UM
DMASS	DTS transfer control	DTTCT071	Undefined	32	FFFF A1CC$_H$	0	32	√	√	√	√	√	√	√	√	√
DMASS	DTS reload source address	DTRSA071	Undefined	32	FFFF A1D0$_H$	0	32	√	√	√	√	√	√	√	√	√
DMASS	DTS reload destination address	DTRDA071	Undefined	32	FFFF A1D4$_H$	0	32	√	√	√	√	√	√	√	√	√
DMASS	DTS reload transfer count	DTRTC071	Undefined	32	FFFF A1D8$_H$	0	32	√	√	√	√	√	√	√	√	√
DMASS	DTS transfer count compare	DTTCC071	Undefined	32	FFFF A1DC$_H$	0	32	√	√	√	√	√	√	√	√	√
DMASS	DTSFSL operation setting	DTFSL071	0000 0000$_H$	32	FFFF A1E0$_H$	0	32	√	√	√	√	√	√	√	√	√
DMASS	DTSFSL transfer request status	DTFST071	0000 0000$_H$	32	FFFF A1E4$_H$	0	32	√	√	√	√	√	√	√	√	√
DMASS	DTSFSL transfer request set	DTFSS071	0000 0000$_H$	32	FFFF A1E8$_H$	0	32	√	√	√	√	√	√	√	√	√
DMASS	DTSFSL transfer request clear	DTFSC071	0000 0000$_H$	32	FFFF A1EC$_H$	0	32	√	√	√	√	√	√	√	√	√
DMASS	DTS source address	DTSA072	Undefined	32	FFFF A200$_H$	0	32	√	√	√	√	√	√	√	√	√
DMASS	DTS destination address	DTDA072	Undefined	32	FFFF A204$_H$	0	32	√	√	√	√	√	√	√	√	√
DMASS	DTS transfer count	DTTC072	Undefined	32	FFFF A208$_H$	0	32	√	√	√	√	√	√	√	√	√
DMASS	DTS transfer control	DTTCT072	Undefined	32	FFFF A20C$_H$	0	32	√	√	√	√	√	√	√	√	√
DMASS	DTS reload source address	DTRSA072	Undefined	32	FFFF A210$_H$	0	32	√	√	√	√	√	√	√	√	√
DMASS	DTS reload destination address	DTRDA072	Undefined	32	FFFF A214$_H$	0	32	√	√	√	√	√	√	√	√	√
DMASS	DTS reload transfer count	DTRTC072	Undefined	32	FFFF A218$_H$	0	32	√	√	√	√	√	√	√	√	√
DMASS	DTS transfer count compare	DTTCC072	Undefined	32	FFFF A21C$_H$	0	32	√	√	√	√	√	√	√	√	√
DMASS	DTSFSL operation setting	DTFSL072	0000 0000$_H$	32	FFFF A220$_H$	0	32	√	√	√	√	√	√	√	√	√
DMASS	DTSFSL transfer request status	DTFST072	0000 0000$_H$	32	FFFF A224$_H$	0	32	√	√	√	√	√	√	√	√	√
DMASS	DTSFSL transfer request set	DTFSS072	0000 0000$_H$	32	FFFF A228$_H$	0	32	√	√	√	√	√	√	√	√	√
DMASS	DTSFSL transfer request clear	DTFSC072	0000 0000$_H$	32	FFFF A22C$_H$	0	32	√	√	√	√	√	√	√	√	√
DMASS	DTS source address	DTSA073	Undefined	32	FFFF A240$_H$	0	32	√	√	√	√	√	√	√	√	√
DMASS	DTS destination address	DTDA073	Undefined	32	FFFF A244$_H$	0	32	√	√	√	√	√	√	√	√	√
DMASS	DTS transfer count	DTTC073	Undefined	32	FFFF A248$_H$	0	32	√	√	√	√	√	√	√	√	√
DMASS	DTS transfer control	DTTCT073	Undefined	32	FFFF A24C$_H$	0	32	√	√	√	√	√	√	√	√	√
DMASS	DTS reload source address	DTRSA073	Undefined	32	FFFF A250$_H$	0	32	√	√	√	√	√	√	√	√	√
DMASS	DTS reload destination address	DTRDA073	Undefined	32	FFFF A254$_H$	0	32	√	√	√	√	√	√	√	√	√
DMASS	DTS reload transfer count	DTRTC073	Undefined	32	FFFF A258$_H$	0	32	√	√	√	√	√	√	√	√	√
DMASS	DTS transfer count compare	DTTCC073	Undefined	32	FFFF A25C$_H$	0	32	√	√	√	√	√	√	√	√	√
DMASS	DTSFSL operation setting	DTFSL073	0000 0000$_H$	32	FFFF A260$_H$	0	32	√	√	√	√	√	√	√	√	√
DMASS	DTSFSL transfer request status	DTFST073	0000 0000$_H$	32	FFFF A264$_H$	0	32	√	√	√	√	√	√	√	√	√
DMASS	DTSFSL transfer request set	DTFSS073	0000 0000$_H$	32	FFFF A268$_H$	0	32	√	√	√	√	√	√	√	√	√
DMASS	DTSFSL transfer request clear	DTFSC073	0000 0000$_H$	32	FFFF A26C$_H$	0	32	√	√	√	√	√	√	√	√	√
DMASS	DTS source address	DTSA074	Undefined	32	FFFF A280$_H$	0	32	√	√	√	√	√	√	√	√	√
DMASS	DTS destination address	DTDA074	Undefined	32	FFFF A284$_H$	0	32	√	√	√	√	√	√	√	√	√
DMASS	DTS transfer count	DTTC074	Undefined	32	FFFF A288$_H$	0	32	√	√	√	√	√	√	√	√	√
DMASS	DTS transfer control	DTTCT074	Undefined	32	FFFF A28C$_H$	0	32	√	√	√	√	√	√	√	√	√
DMASS	DTS reload source address	DTRSA074	Undefined	32	FFFF A290$_H$	0	32	√	√	√	√	√	√	√	√	√
DMASS	DTS reload destination address	DTRDA074	Undefined	32	FFFF A294$_H$	0	32	√	√	√	√	√	√	√	√	√
DMASS	DTS reload transfer count	DTRTC074	Undefined	32	FFFF A298$_H$	0	32	√	√	√	√	√	√	√	√	√
DMASS	DTS transfer count compare	DTTCC074	Undefined	32	FFFF A29C$_H$	0	32	√	√	√	√	√	√	√	√	√
DMASS	DTSFSL operation setting	DTFSL074	0000 0000$_H$	32	FFFF A2A0$_H$	0	32	√	√	√	√	√	√	√	√	√
DMASS	DTSFSL transfer request status	DTFST074	0000 0000$_H$	32	FFFF A2A4$_H$	0	32	√	√	√	√	√	√	√	√	√
DMASS	DTSFSL transfer request set	DTFSS074	0000 0000$_H$	32	FFFF A2A8$_H$	0	32	√	√	√	√	√	√	√	√	√
DMASS	DTSFSL transfer request clear	DTFSC074	0000 0000$_H$	32	FFFF A2AC$_H$	0	32	√	√	√	√	√	√	√	√	√
DMASS	DTS source address	DTSA075	Undefined	32	FFFF A2C0$_H$	0	32	√	√	√	√	√	√	√	√	√
DMASS	DTS destination address	DTDA075	Undefined	32	FFFF A2C4$_H$	0	32	√	√	√	√	√	√	√	√	√
DMASS	DTS transfer count	DTTC075	Undefined	32	FFFF A2C8$_H$	0	32	√	√	√	√	√	√	√	√	√
DMASS	DTS transfer control	DTTCT075	Undefined	32	FFFF A2CC$_H$	0	32	√	√	√	√	√	√	√	√	√
DMASS	DTS reload source address	DTRSA075	Undefined	32	FFFF A2D0$_H$	0	32	√	√	√	√	√	√	√	√	√
DMASS	DTS reload destination address	DTRDA075	Undefined	32	FFFF A2D4$_H$	0	32	√	√	√	√	√	√	√	√	√
DMASS	DTS reload transfer count	DTRTC075	Undefined	32	FFFF A2D8$_H$	0	32	√	√	√	√	√	√	√	√	√
DMASS	DTS transfer count compare	DTTCC075	Undefined	32	FFFF A2DC$_H$	0	32	√	√	√	√	√	√	√	√	√

Table A.1 List of Registers (99/124)

Module	Register	Symbol	Value after Reset	Number of Bits	Address	Peripheral IP group	Access Size	Reset Source*1							Access Authority*1	
								POCRES	CVMRES	EXTRES	DBRES	ECMRES	BISTRES	SWRES	SV	UM
DMASS	DTSFSL operation setting	DTFSL075	$0000\ 0000_H$	32	$FFFF\ A2E0_H$	0	32	√	√	√	√	√	√	√	√	√
DMASS	DTSFSL transfer request status	DTFST075	$0000\ 0000_H$	32	$FFFF\ A2E4_H$	0	32	√	√	√	√	√	√	√	√	√
DMASS	DTSFSL transfer request set	DTFSS075	$0000\ 0000_H$	32	$FFFF\ A2E8_H$	0	32	√	√	√	√	√	√	√	√	√
DMASS	DTSFSL transfer request clear	DTFSC075	$0000\ 0000_H$	32	$FFFF\ A2EC_H$	0	32	√	√	√	√	√	√	√	√	√
DMASS	DTS source address	DTSA076	Undefined	32	$FFFF\ A300_H$	0	32	√	√	√	√	√	√	√	√	√
DMASS	DTS destination address	DTDA076	Undefined	32	$FFFF\ A304_H$	0	32	√	√	√	√	√	√	√	√	√
DMASS	DTS transfer count	DTTC076	Undefined	32	$FFFF\ A308_H$	0	32	√	√	√	√	√	√	√	√	√
DMASS	DTS transfer control	DTTCT076	Undefined	32	$FFFF\ A30C_H$	0	32	√	√	√	√	√	√	√	√	√
DMASS	DTS reload source address	DTRSA076	Undefined	32	$FFFF\ A310_H$	0	32	√	√	√	√	√	√	√	√	√
DMASS	DTS reload destination address	DTRDA076	Undefined	32	$FFFF\ A314_H$	0	32	√	√	√	√	√	√	√	√	√
DMASS	DTS reload transfer count	DTRTC076	Undefined	32	$FFFF\ A318_H$	0	32	√	√	√	√	√	√	√	√	√
DMASS	DTS transfer count compare	DTTCC076	Undefined	32	$FFFF\ A31C_H$	0	32	√	√	√	√	√	√	√	√	√
DMASS	DTSFSL operation setting	DTFSL076	$0000\ 0000_H$	32	$FFFF\ A320_H$	0	32	√	√	√	√	√	√	√	√	√
DMASS	DTSFSL transfer request status	DTFST076	$0000\ 0000_H$	32	$FFFF\ A324_H$	0	32	√	√	√	√	√	√	√	√	√
DMASS	DTSFSL transfer request set	DTFSS076	$0000\ 0000_H$	32	$FFFF\ A328_H$	0	32	√	√	√	√	√	√	√	√	√
DMASS	DTSFSL transfer request clear	DTFSC076	$0000\ 0000_H$	32	$FFFF\ A32C_H$	0	32	√	√	√	√	√	√	√	√	√
DMASS	DTS source address	DTSA077	Undefined	32	$FFFF\ A340_H$	0	32	√	√	√	√	√	√	√	√	√
DMASS	DTS destination address	DTDA077	Undefined	32	$FFFF\ A344_H$	0	32	√	√	√	√	√	√	√	√	√
DMASS	DTS transfer count	DTTC077	Undefined	32	$FFFF\ A348_H$	0	32	√	√	√	√	√	√	√	√	√
DMASS	DTS transfer control	DTTCT077	Undefined	32	$FFFF\ A34C_H$	0	32	√	√	√	√	√	√	√	√	√
DMASS	DTS reload source address	DTRSA077	Undefined	32	$FFFF\ A350_H$	0	32	√	√	√	√	√	√	√	√	√
DMASS	DTS reload destination address	DTRDA077	Undefined	32	$FFFF\ A354_H$	0	32	√	√	√	√	√	√	√	√	√
DMASS	DTS reload transfer count	DTRTC077	Undefined	32	$FFFF\ A358_H$	0	32	√	√	√	√	√	√	√	√	√
DMASS	DTS transfer count compare	DTTCC077	Undefined	32	$FFFF\ A35C_H$	0	32	√	√	√	√	√	√	√	√	√
DMASS	DTSFSL operation setting	DTFSL077	$0000\ 0000_H$	32	$FFFF\ A360_H$	0	32	√	√	√	√	√	√	√	√	√
DMASS	DTSFSL transfer request status	DTFST077	$0000\ 0000_H$	32	$FFFF\ A364_H$	0	32	√	√	√	√	√	√	√	√	√
DMASS	DTSFSL transfer request set	DTFSS077	$0000\ 0000_H$	32	$FFFF\ A368_H$	0	32	√	√	√	√	√	√	√	√	√
DMASS	DTSFSL transfer request clear	DTFSC077	$0000\ 0000_H$	32	$FFFF\ A36C_H$	0	32	√	√	√	√	√	√	√	√	√
DMASS	DTS source address	DTSA078	Undefined	32	$FFFF\ A380_H$	0	32	√	√	√	√	√	√	√	√	√
DMASS	DTS destination address	DTDA078	Undefined	32	$FFFF\ A384_H$	0	32	√	√	√	√	√	√	√	√	√
DMASS	DTS transfer count	DTTC078	Undefined	32	$FFFF\ A388_H$	0	32	√	√	√	√	√	√	√	√	√
DMASS	DTS transfer control	DTTCT078	Undefined	32	$FFFF\ A38C_H$	0	32	√	√	√	√	√	√	√	√	√
DMASS	DTS reload source address	DTRSA078	Undefined	32	$FFFF\ A390_H$	0	32	√	√	√	√	√	√	√	√	√
DMASS	DTS reload destination address	DTRDA078	Undefined	32	$FFFF\ A394_H$	0	32	√	√	√	√	√	√	√	√	√
DMASS	DTS reload transfer count	DTRTC078	Undefined	32	$FFFF\ A398_H$	0	32	√	√	√	√	√	√	√	√	√
DMASS	DTS transfer count compare	DTTCC078	Undefined	32	$FFFF\ A39C_H$	0	32	√	√	√	√	√	√	√	√	√
DMASS	DTSFSL operation setting	DTFSL078	$0000\ 0000_H$	32	$FFFF\ A3A0_H$	0	32	√	√	√	√	√	√	√	√	√
DMASS	DTSFSL transfer request status	DTFST078	$0000\ 0000_H$	32	$FFFF\ A3A4_H$	0	32	√	√	√	√	√	√	√	√	√
DMASS	DTSFSL transfer request set	DTFSS078	$0000\ 0000_H$	32	$FFFF\ A3A8_H$	0	32	√	√	√	√	√	√	√	√	√
DMASS	DTSFSL transfer request clear	DTFSC078	$0000\ 0000_H$	32	$FFFF\ A3AC_H$	0	32	√	√	√	√	√	√	√	√	√
DMASS	DTS source address	DTSA079	Undefined	32	$FFFF\ A3C0_H$	0	32	√	√	√	√	√	√	√	√	√
DMASS	DTS destination address	DTDA079	Undefined	32	$FFFF\ A3C4_H$	0	32	√	√	√	√	√	√	√	√	√
DMASS	DTS transfer count	DTTC079	Undefined	32	$FFFF\ A3C8_H$	0	32	√	√	√	√	√	√	√	√	√
DMASS	DTS transfer control	DTTCT079	Undefined	32	$FFFF\ A3CC_H$	0	32	√	√	√	√	√	√	√	√	√
DMASS	DTS reload source address	DTRSA079	Undefined	32	$FFFF\ A3D0_H$	0	32	√	√	√	√	√	√	√	√	√
DMASS	DTS reload destination address	DTRDA079	Undefined	32	$FFFF\ A3D4_H$	0	32	√	√	√	√	√	√	√	√	√
DMASS	DTS reload transfer count	DTRTC079	Undefined	32	$FFFF\ A3D8_H$	0	32	√	√	√	√	√	√	√	√	√
DMASS	DTS transfer count compare	DTTCC079	Undefined	32	$FFFF\ A3DC_H$	0	32	√	√	√	√	√	√	√	√	√
DMASS	DTSFSL operation setting	DTFSL079	$0000\ 0000_H$	32	$FFFF\ A3E0_H$	0	32	√	√	√	√	√	√	√	√	√
DMASS	DTSFSL transfer request status	DTFST079	$0000\ 0000_H$	32	$FFFF\ A3E4_H$	0	32	√	√	√	√	√	√	√	√	√
DMASS	DTSFSL transfer request set	DTFSS079	$0000\ 0000_H$	32	$FFFF\ A3E8_H$	0	32	√	√	√	√	√	√	√	√	√
DMASS	DTSFSL transfer request clear	DTFSC079	$0000\ 0000_H$	32	$FFFF\ A3EC_H$	0	32	√	√	√	√	√	√	√	√	√
DMASS	DTS source address	DTSA080	Undefined	32	$FFFF\ A400_H$	0	32	√	√	√	√	√	√	√	√	√

Table A.1 List of Registers (100/124)

Module	Register	Symbol	Value after Reset	Number of Bits	Address	Peripheral IP group	Access Size	Reset Source*1							Access Authority*1	
								POCRES	CVMRES	EXTRES	DBRES	ECMRES	BISTRES	SWRES	SV	UM
DMASS	DTS destination address	DTDA080	Undefined	32	FFFF A404$_H$	0	32	√	√	√	√	√	√	√	√	√
DMASS	DTS transfer count	DTTC080	Undefined	32	FFFF A408$_H$	0	32	√	√	√	√	√	√	√	√	√
DMASS	DTS transfer control	DTTCT080	Undefined	32	FFFF A40C$_H$	0	32	√	√	√	√	√	√	√	√	√
DMASS	DTS reload source address	DTRSA080	Undefined	32	FFFF A410$_H$	0	32	√	√	√	√	√	√	√	√	√
DMASS	DTS reload destination address	DTRDA080	Undefined	32	FFFF A414$_H$	0	32	√	√	√	√	√	√	√	√	√
DMASS	DTS reload transfer count	DTRTC080	Undefined	32	FFFF A418$_H$	0	32	√	√	√	√	√	√	√	√	√
DMASS	DTS transfer count compare	DTTCC080	Undefined	32	FFFF A41C$_H$	0	32	√	√	√	√	√	√	√	√	√
DMASS	DTSFSL operation setting	DTFSL080	0000 0000$_H$	32	FFFF A420$_H$	0	32	√	√	√	√	√	√	√	√	√
DMASS	DTSFSL transfer request status	DTFST080	0000 0000$_H$	32	FFFF A424$_H$	0	32	√	√	√	√	√	√	√	√	√
DMASS	DTSFSL transfer request set	DTFSS080	0000 0000$_H$	32	FFFF A428$_H$	0	32	√	√	√	√	√	√	√	√	√
DMASS	DTSFSL transfer request clear	DTFSC080	0000 0000$_H$	32	FFFF A42C$_H$	0	32	√	√	√	√	√	√	√	√	√
DMASS	DTS source address	DTSA081	Undefined	32	FFFF A440$_H$	0	32	√	√	√	√	√	√	√	√	√
DMASS	DTS destination address	DTDA081	Undefined	32	FFFF A444$_H$	0	32	√	√	√	√	√	√	√	√	√
DMASS	DTS transfer count	DTTC081	Undefined	32	FFFF A448$_H$	0	32	√	√	√	√	√	√	√	√	√
DMASS	DTS transfer control	DTTCT081	Undefined	32	FFFF A44C$_H$	0	32	√	√	√	√	√	√	√	√	√
DMASS	DTS reload source address	DTRSA081	Undefined	32	FFFF A450$_H$	0	32	√	√	√	√	√	√	√	√	√
DMASS	DTS reload destination address	DTRDA081	Undefined	32	FFFF A454$_H$	0	32	√	√	√	√	√	√	√	√	√
DMASS	DTS reload transfer count	DTRTC081	Undefined	32	FFFF A458$_H$	0	32	√	√	√	√	√	√	√	√	√
DMASS	DTS transfer count compare	DTTCC081	Undefined	32	FFFF A45C$_H$	0	32	√	√	√	√	√	√	√	√	√
DMASS	DTSFSL operation setting	DTFSL081	0000 0000$_H$	32	FFFF A460$_H$	0	32	√	√	√	√	√	√	√	√	√
DMASS	DTSFSL transfer request status	DTFST081	0000 0000$_H$	32	FFFF A464$_H$	0	32	√	√	√	√	√	√	√	√	√
DMASS	DTSFSL transfer request set	DTFSS081	0000 0000$_H$	32	FFFF A468$_H$	0	32	√	√	√	√	√	√	√	√	√
DMASS	DTSFSL transfer request clear	DTFSC081	0000 0000$_H$	32	FFFF A46C$_H$	0	32	√	√	√	√	√	√	√	√	√
DMASS	DTS source address	DTSA082	Undefined	32	FFFF A480$_H$	0	32	√	√	√	√	√	√	√	√	√
DMASS	DTS destination address	DTDA082	Undefined	32	FFFF A484$_H$	0	32	√	√	√	√	√	√	√	√	√
DMASS	DTS transfer count	DTTC082	Undefined	32	FFFF A488$_H$	0	32	√	√	√	√	√	√	√	√	√
DMASS	DTS transfer control	DTTCT082	Undefined	32	FFFF A48C$_H$	0	32	√	√	√	√	√	√	√	√	√
DMASS	DTS reload source address	DTRSA082	Undefined	32	FFFF A490$_H$	0	32	√	√	√	√	√	√	√	√	√
DMASS	DTS reload destination address	DTRDA082	Undefined	32	FFFF A494$_H$	0	32	√	√	√	√	√	√	√	√	√
DMASS	DTS reload transfer count	DTRTC082	Undefined	32	FFFF A498$_H$	0	32	√	√	√	√	√	√	√	√	√
DMASS	DTS transfer count compare	DTTCC082	Undefined	32	FFFF A49C$_H$	0	32	√	√	√	√	√	√	√	√	√
DMASS	DTSFSL operation setting	DTFSL082	0000 0000$_H$	32	FFFF A4A0$_H$	0	32	√	√	√	√	√	√	√	√	√
DMASS	DTSFSL transfer request status	DTFST082	0000 0000$_H$	32	FFFF A4A4$_H$	0	32	√	√	√	√	√	√	√	√	√
DMASS	DTSFSL transfer request set	DTFSS082	0000 0000$_H$	32	FFFF A4A8$_H$	0	32	√	√	√	√	√	√	√	√	√
DMASS	DTSFSL transfer request clear	DTFSC082	0000 0000$_H$	32	FFFF A4AC$_H$	0	32	√	√	√	√	√	√	√	√	√
DMASS	DTS source address	DTSA083	Undefined	32	FFFF A4C0$_H$	0	32	√	√	√	√	√	√	√	√	√
DMASS	DTS destination address	DTDA083	Undefined	32	FFFF A4C4$_H$	0	32	√	√	√	√	√	√	√	√	√
DMASS	DTS transfer count	DTTC083	Undefined	32	FFFF A4C8$_H$	0	32	√	√	√	√	√	√	√	√	√
DMASS	DTS transfer control	DTTCT083	Undefined	32	FFFF A4CC$_H$	0	32	√	√	√	√	√	√	√	√	√
DMASS	DTS reload source address	DTRSA083	Undefined	32	FFFF A4D0$_H$	0	32	√	√	√	√	√	√	√	√	√
DMASS	DTS reload destination address	DTRDA083	Undefined	32	FFFF A4D4$_H$	0	32	√	√	√	√	√	√	√	√	√
DMASS	DTS reload transfer count	DTRTC083	Undefined	32	FFFF A4D8$_H$	0	32	√	√	√	√	√	√	√	√	√
DMASS	DTS transfer count compare	DTTCC083	Undefined	32	FFFF A4DC$_H$	0	32	√	√	√	√	√	√	√	√	√
DMASS	DTSFSL operation setting	DTFSL083	0000 0000$_H$	32	FFFF A4E0$_H$	0	32	√	√	√	√	√	√	√	√	√
DMASS	DTSFSL transfer request status	DTFST083	0000 0000$_H$	32	FFFF A4E4$_H$	0	32	√	√	√	√	√	√	√	√	√
DMASS	DTSFSL transfer request set	DTFSS083	0000 0000$_H$	32	FFFF A4E8$_H$	0	32	√	√	√	√	√	√	√	√	√
DMASS	DTSFSL transfer request clear	DTFSC083	0000 0000$_H$	32	FFFF A4EC$_H$	0	32	√	√	√	√	√	√	√	√	√
DMASS	DTS source address	DTSA084	Undefined	32	FFFF A500$_H$	0	32	√	√	√	√	√	√	√	√	√
DMASS	DTS destination address	DTDA084	Undefined	32	FFFF A504$_H$	0	32	√	√	√	√	√	√	√	√	√
DMASS	DTS transfer count	DTTC084	Undefined	32	FFFF A508$_H$	0	32	√	√	√	√	√	√	√	√	√
DMASS	DTS transfer control	DTTCT084	Undefined	32	FFFF A50C$_H$	0	32	√	√	√	√	√	√	√	√	√
DMASS	DTS reload source address	DTRSA084	Undefined	32	FFFF A510$_H$	0	32	√	√	√	√	√	√	√	√	√
DMASS	DTS reload destination address	DTRDA084	Undefined	32	FFFF A514$_H$	0	32	√	√	√	√	√	√	√	√	√

Table A.1 List of Registers (101/124)

Module	Register	Symbol	Value after Reset	Number of Bits	Address	Peripheral IP group	Access Size	Reset Source*1							Access Authority*1	
								POCRES	CVMRES	EXTRES	DBRES	ECMRES	BISTRES	SWRES	SV	UM
DMASS	DTS reload transfer count	DTRTC084	Undefined	32	FFFF A518$_H$	0	32	√	√	√	√	√	√	√	√	√
DMASS	DTS transfer count compare	DTTCC084	Undefined	32	FFFF A51C$_H$	0	32	√	√	√	√	√	√	√	√	√
DMASS	DTSFSL operation setting	DTFSL084	0000 0000$_H$	32	FFFF A520$_H$	0	32	√	√	√	√	√	√	√	√	√
DMASS	DTSFSL transfer request status	DTFST084	0000 0000$_H$	32	FFFF A524$_H$	0	32	√	√	√	√	√	√	√	√	√
DMASS	DTSFSL transfer request set	DTFSS084	0000 0000$_H$	32	FFFF A528$_H$	0	32	√	√	√	√	√	√	√	√	√
DMASS	DTSFSL transfer request clear	DTFSC084	0000 0000$_H$	32	FFFF A52C$_H$	0	32	√	√	√	√	√	√	√	√	√
DMASS	DTS source address	DTSA085	Undefined	32	FFFF A540$_H$	0	32	√	√	√	√	√	√	√	√	√
DMASS	DTS destination address	DTDA085	Undefined	32	FFFF A544$_H$	0	32	√	√	√	√	√	√	√	√	√
DMASS	DTS transfer count	DTTC085	Undefined	32	FFFF A548$_H$	0	32	√	√	√	√	√	√	√	√	√
DMASS	DTS transfer control	DTTCT085	Undefined	32	FFFF A54C$_H$	0	32	√	√	√	√	√	√	√	√	√
DMASS	DTS reload source address	DTRSA085	Undefined	32	FFFF A550$_H$	0	32	√	√	√	√	√	√	√	√	√
DMASS	DTS reload destination address	DTRDA085	Undefined	32	FFFF A554$_H$	0	32	√	√	√	√	√	√	√	√	√
DMASS	DTS reload transfer count	DTRTC085	Undefined	32	FFFF A558$_H$	0	32	√	√	√	√	√	√	√	√	√
DMASS	DTS transfer count compare	DTTCC085	Undefined	32	FFFF A55C$_H$	0	32	√	√	√	√	√	√	√	√	√
DMASS	DTSFSL operation setting	DTFSL085	0000 0000$_H$	32	FFFF A560$_H$	0	32	√	√	√	√	√	√	√	√	√
DMASS	DTSFSL transfer request status	DTFST085	0000 0000$_H$	32	FFFF A564$_H$	0	32	√	√	√	√	√	√	√	√	√
DMASS	DTSFSL transfer request set	DTFSS085	0000 0000$_H$	32	FFFF A568$_H$	0	32	√	√	√	√	√	√	√	√	√
DMASS	DTSFSL transfer request clear	DTFSC085	0000 0000$_H$	32	FFFF A56C$_H$	0	32	√	√	√	√	√	√	√	√	√
DMASS	DTS source address	DTSA086	Undefined	32	FFFF A580$_H$	0	32	√	√	√	√	√	√	√	√	√
DMASS	DTS destination address	DTDA086	Undefined	32	FFFF A584$_H$	0	32	√	√	√	√	√	√	√	√	√
DMASS	DTS transfer count	DTTC086	Undefined	32	FFFF A588$_H$	0	32	√	√	√	√	√	√	√	√	√
DMASS	DTS transfer control	DTTCT086	Undefined	32	FFFF A58C$_H$	0	32	√	√	√	√	√	√	√	√	√
DMASS	DTS reload source address	DTRSA086	Undefined	32	FFFF A590$_H$	0	32	√	√	√	√	√	√	√	√	√
DMASS	DTS reload destination address	DTRDA086	Undefined	32	FFFF A594$_H$	0	32	√	√	√	√	√	√	√	√	√
DMASS	DTS reload transfer count	DTRTC086	Undefined	32	FFFF A598$_H$	0	32	√	√	√	√	√	√	√	√	√
DMASS	DTS transfer count compare	DTTCC086	Undefined	32	FFFF A59C$_H$	0	32	√	√	√	√	√	√	√	√	√
DMASS	DTSFSL operation setting	DTFSL086	0000 0000$_H$	32	FFFF A5A0$_H$	0	32	√	√	√	√	√	√	√	√	√
DMASS	DTSFSL transfer request status	DTFST086	0000 0000$_H$	32	FFFF A5A4$_H$	0	32	√	√	√	√	√	√	√	√	√
DMASS	DTSFSL transfer request set	DTFSS086	0000 0000$_H$	32	FFFF A5A8$_H$	0	32	√	√	√	√	√	√	√	√	√
DMASS	DTSFSL transfer request clear	DTFSC086	0000 0000$_H$	32	FFFF A5AC$_H$	0	32	√	√	√	√	√	√	√	√	√
DMASS	DTS source address	DTSA087	Undefined	32	FFFF A5C0$_H$	0	32	√	√	√	√	√	√	√	√	√
DMASS	DTS destination address	DTDA087	Undefined	32	FFFF A5C4$_H$	0	32	√	√	√	√	√	√	√	√	√
DMASS	DTS transfer count	DTTC087	Undefined	32	FFFF A5C8$_H$	0	32	√	√	√	√	√	√	√	√	√
DMASS	DTS transfer control	DTTCT087	Undefined	32	FFFF A5CC$_H$	0	32	√	√	√	√	√	√	√	√	√
DMASS	DTS reload source address	DTRSA087	Undefined	32	FFFF A5D0$_H$	0	32	√	√	√	√	√	√	√	√	√
DMASS	DTS reload destination address	DTRDA087	Undefined	32	FFFF A5D4$_H$	0	32	√	√	√	√	√	√	√	√	√
DMASS	DTS reload transfer count	DTRTC087	Undefined	32	FFFF A5D8$_H$	0	32	√	√	√	√	√	√	√	√	√
DMASS	DTS transfer count compare	DTTCC087	Undefined	32	FFFF A5DC$_H$	0	32	√	√	√	√	√	√	√	√	√
DMASS	DTSFSL operation setting	DTFSL087	0000 0000$_H$	32	FFFF A5E0$_H$	0	32	√	√	√	√	√	√	√	√	√
DMASS	DTSFSL transfer request status	DTFST087	0000 0000$_H$	32	FFFF A5E4$_H$	0	32	√	√	√	√	√	√	√	√	√
DMASS	DTSFSL transfer request set	DTFSS087	0000 0000$_H$	32	FFFF A5E8$_H$	0	32	√	√	√	√	√	√	√	√	√
DMASS	DTSFSL transfer request clear	DTFSC087	0000 0000$_H$	32	FFFF A5EC$_H$	0	32	√	√	√	√	√	√	√	√	√
DMASS	DTS source address	DTSA088	Undefined	32	FFFF A600$_H$	0	32	√	√	√	√	√	√	√	√	√
DMASS	DTS destination address	DTDA088	Undefined	32	FFFF A604$_H$	0	32	√	√	√	√	√	√	√	√	√
DMASS	DTS transfer count	DTTC088	Undefined	32	FFFF A608$_H$	0	32	√	√	√	√	√	√	√	√	√
DMASS	DTS transfer control	DTTCT088	Undefined	32	FFFF A60C$_H$	0	32	√	√	√	√	√	√	√	√	√
DMASS	DTS reload source address	DTRSA088	Undefined	32	FFFF A610$_H$	0	32	√	√	√	√	√	√	√	√	√
DMASS	DTS reload destination address	DTRDA088	Undefined	32	FFFF A614$_H$	0	32	√	√	√	√	√	√	√	√	√
DMASS	DTS reload transfer count	DTRTC088	Undefined	32	FFFF A618$_H$	0	32	√	√	√	√	√	√	√	√	√
DMASS	DTS transfer count compare	DTTCC088	Undefined	32	FFFF A61C$_H$	0	32	√	√	√	√	√	√	√	√	√
DMASS	DTSFSL operation setting	DTFSL088	0000 0000$_H$	32	FFFF A620$_H$	0	32	√	√	√	√	√	√	√	√	√
DMASS	DTSFSL transfer request status	DTFST088	0000 0000$_H$	32	FFFF A624$_H$	0	32	√	√	√	√	√	√	√	√	√
DMASS	DTSFSL transfer request set	DTFSS088	0000 0000$_H$	32	FFFF A628$_H$	0	32	√	√	√	√	√	√	√	√	√

Table A.1 List of Registers (102/124)

Module	Register	Symbol	Value after Reset	Number of Bits	Address	Peripheral IP group	Access Size	Reset Source*1							Access Authority*1	
								POCRES	CVMRES	EXTRES	DBRES	ECMRES	BISTRES	SWRES	SV	UM
DMASS	DTSFSL transfer request clear	DTFSC088	0000 0000_H	32	FFFF $A62C_H$	0	32	√	√	√	√	√	√	√	√	√
DMASS	DTS source address	DTSA089	Undefined	32	FFFF $A640_H$	0	32	√	√	√	√	√	√	√	√	√
DMASS	DTS destination address	DTDA089	Undefined	32	FFFF $A644_H$	0	32	√	√	√	√	√	√	√	√	√
DMASS	DTS transfer count	DTTC089	Undefined	32	FFFF $A648_H$	0	32	√	√	√	√	√	√	√	√	√
DMASS	DTS transfer control	DTTCT089	Undefined	32	FFFF $A64C_H$	0	32	√	√	√	√	√	√	√	√	√
DMASS	DTS reload source address	DTRSA089	Undefined	32	FFFF $A650_H$	0	32	√	√	√	√	√	√	√	√	√
DMASS	DTS reload destination address	DTRDA089	Undefined	32	FFFF $A654_H$	0	32	√	√	√	√	√	√	√	√	√
DMASS	DTS reload transfer count	DTRTC089	Undefined	32	FFFF $A658_H$	0	32	√	√	√	√	√	√	√	√	√
DMASS	DTS transfer count compare	DTTCC089	Undefined	32	FFFF $A65C_H$	0	32	√	√	√	√	√	√	√	√	√
DMASS	DTSFSL operation setting	DTFSL089	0000 0000_H	32	FFFF $A660_H$	0	32	√	√	√	√	√	√	√	√	√
DMASS	DTSFSL transfer request status	DTFST089	0000 0000_H	32	FFFF $A664_H$	0	32	√	√	√	√	√	√	√	√	√
DMASS	DTSFSL transfer request set	DTFSS089	0000 0000_H	32	FFFF $A668_H$	0	32	√	√	√	√	√	√	√	√	√
DMASS	DTSFSL transfer request clear	DTFSC089	0000 0000_H	32	FFFF $A66C_H$	0	32	√	√	√	√	√	√	√	√	√
DMASS	DTS source address	DTSA090	Undefined	32	FFFF $A680_H$	0	32	√	√	√	√	√	√	√	√	√
DMASS	DTS destination address	DTDA090	Undefined	32	FFFF $A684_H$	0	32	√	√	√	√	√	√	√	√	√
DMASS	DTS transfer count	DTTC090	Undefined	32	FFFF $A688_H$	0	32	√	√	√	√	√	√	√	√	√
DMASS	DTS transfer control	DTTCT090	Undefined	32	FFFF $A68C_H$	0	32	√	√	√	√	√	√	√	√	√
DMASS	DTS reload source address	DTRSA090	Undefined	32	FFFF $A690_H$	0	32	√	√	√	√	√	√	√	√	√
DMASS	DTS reload destination address	DTRDA090	Undefined	32	FFFF $A694_H$	0	32	√	√	√	√	√	√	√	√	√
DMASS	DTS reload transfer count	DTRTC090	Undefined	32	FFFF $A698_H$	0	32	√	√	√	√	√	√	√	√	√
DMASS	DTS transfer count compare	DTTCC090	Undefined	32	FFFF $A69C_H$	0	32	√	√	√	√	√	√	√	√	√
DMASS	DTSFSL operation setting	DTFSL090	0000 0000_H	32	FFFF $A6A0_H$	0	32	√	√	√	√	√	√	√	√	√
DMASS	DTSFSL transfer request status	DTFST090	0000 0000_H	32	FFFF $A6A4_H$	0	32	√	√	√	√	√	√	√	√	√
DMASS	DTSFSL transfer request set	DTFSS090	0000 0000_H	32	FFFF $A6A8_H$	0	32	√	√	√	√	√	√	√	√	√
DMASS	DTSFSL transfer request clear	DTFSC090	0000 0000_H	32	FFFF $A6AC_H$	0	32	√	√	√	√	√	√	√	√	√
DMASS	DTS source address	DTSA091	Undefined	32	FFFF $A6C0_H$	0	32	√	√	√	√	√	√	√	√	√
DMASS	DTS destination address	DTDA091	Undefined	32	FFFF $A6C4_H$	0	32	√	√	√	√	√	√	√	√	√
DMASS	DTS transfer count	DTTC091	Undefined	32	FFFF $A6C8_H$	0	32	√	√	√	√	√	√	√	√	√
DMASS	DTS transfer control	DTTCT091	Undefined	32	FFFF $A6CC_H$	0	32	√	√	√	√	√	√	√	√	√
DMASS	DTS reload source address	DTRSA091	Undefined	32	FFFF $A6D0_H$	0	32	√	√	√	√	√	√	√	√	√
DMASS	DTS reload destination address	DTRDA091	Undefined	32	FFFF $A6D4_H$	0	32	√	√	√	√	√	√	√	√	√
DMASS	DTS reload transfer count	DTRTC091	Undefined	32	FFFF $A6D8_H$	0	32	√	√	√	√	√	√	√	√	√
DMASS	DTS transfer count compare	DTTCC091	Undefined	32	FFFF $A6DC_H$	0	32	√	√	√	√	√	√	√	√	√
DMASS	DTSFSL operation setting	DTFSL091	0000 0000_H	32	FFFF $A6E0_H$	0	32	√	√	√	√	√	√	√	√	√
DMASS	DTSFSL transfer request status	DTFST091	0000 0000_H	32	FFFF $A6E4_H$	0	32	√	√	√	√	√	√	√	√	√
DMASS	DTSFSL transfer request set	DTFSS091	0000 0000_H	32	FFFF $A6E8_H$	0	32	√	√	√	√	√	√	√	√	√
DMASS	DTSFSL transfer request clear	DTFSC091	0000 0000_H	32	FFFF $A6EC_H$	0	32	√	√	√	√	√	√	√	√	√
DMASS	DTS source address	DTSA092	Undefined	32	FFFF $A700_H$	0	32	√	√	√	√	√	√	√	√	√
DMASS	DTS destination address	DTDA092	Undefined	32	FFFF $A704_H$	0	32	√	√	√	√	√	√	√	√	√
DMASS	DTS transfer count	DTTC092	Undefined	32	FFFF $A708_H$	0	32	√	√	√	√	√	√	√	√	√
DMASS	DTS transfer control	DTTCT092	Undefined	32	FFFF $A70C_H$	0	32	√	√	√	√	√	√	√	√	√
DMASS	DTS reload source address	DTRSA092	Undefined	32	FFFF $A710_H$	0	32	√	√	√	√	√	√	√	√	√
DMASS	DTS reload destination address	DTRDA092	Undefined	32	FFFF $A714_H$	0	32	√	√	√	√	√	√	√	√	√
DMASS	DTS reload transfer count	DTRTC092	Undefined	32	FFFF $A718_H$	0	32	√	√	√	√	√	√	√	√	√
DMASS	DTS transfer count compare	DTTCC092	Undefined	32	FFFF $A71C_H$	0	32	√	√	√	√	√	√	√	√	√
DMASS	DTSFSL operation setting	DTFSL092	0000 0000_H	32	FFFF $A720_H$	0	32	√	√	√	√	√	√	√	√	√
DMASS	DTSFSL transfer request status	DTFST092	0000 0000_H	32	FFFF $A724_H$	0	32	√	√	√	√	√	√	√	√	√
DMASS	DTSFSL transfer request set	DTFSS092	0000 0000_H	32	FFFF $A728_H$	0	32	√	√	√	√	√	√	√	√	√
DMASS	DTSFSL transfer request clear	DTFSC092	0000 0000_H	32	FFFF $A72C_H$	0	32	√	√	√	√	√	√	√	√	√
DMASS	DTS source address	DTSA093	Undefined	32	FFFF $A740_H$	0	32	√	√	√	√	√	√	√	√	√
DMASS	DTS destination address	DTDA093	Undefined	32	FFFF $A744_H$	0	32	√	√	√	√	√	√	√	√	√
DMASS	DTS transfer count	DTTC093	Undefined	32	FFFF $A748_H$	0	32	√	√	√	√	√	√	√	√	√
DMASS	DTS transfer control	DTTCT093	Undefined	32	FFFF $A74C_H$	0	32	√	√	√	√	√	√	√	√	√

Table A.1 List of Registers (103/124)

Module	Register	Symbol	Value after Reset	Number of Bits	Address	Peripheral IP group	Access Size	Reset Source*1							Access Authority*1	
								POCRES	CVMRES	EXTRES	DBRES	ECMRES	BISTRES	SWRES	SV	UM
DMASS	DTS reload source address	DTRSA093	Undefined	32	FFFF A750$_H$	0	32	√	√	√	√	√	√	√	√	√
DMASS	DTS reload destination address	DTRDA093	Undefined	32	FFFF A754$_H$	0	32	√	√	√	√	√	√	√	√	√
DMASS	DTS reload transfer count	DTRTC093	Undefined	32	FFFF A758$_H$	0	32	√	√	√	√	√	√	√	√	√
DMASS	DTS transfer count compare	DTTCC093	Undefined	32	FFFF A75C$_H$	0	32	√	√	√	√	√	√	√	√	√
DMASS	DTSFSL operation setting	DTFSL093	0000 0000$_H$	32	FFFF A760$_H$	0	32	√	√	√	√	√	√	√	√	√
DMASS	DTSFSL transfer request status	DTFST093	0000 0000$_H$	32	FFFF A764$_H$	0	32	√	√	√	√	√	√	√	√	√
DMASS	DTSFSL transfer request set	DTFSS093	0000 0000$_H$	32	FFFF A768$_H$	0	32	√	√	√	√	√	√	√	√	√
DMASS	DTSFSL transfer request clear	DTFSC093	0000 0000$_H$	32	FFFF A76C$_H$	0	32	√	√	√	√	√	√	√	√	√
DMASS	DTS source address	DTSA094	Undefined	32	FFFF A780$_H$	0	32	√	√	√	√	√	√	√	√	√
DMASS	DTS destination address	DTDA094	Undefined	32	FFFF A784$_H$	0	32	√	√	√	√	√	√	√	√	√
DMASS	DTS transfer count	DTTC094	Undefined	32	FFFF A788$_H$	0	32	√	√	√	√	√	√	√	√	√
DMASS	DTS transfer control	DTTCT094	Undefined	32	FFFF A78C$_H$	0	32	√	√	√	√	√	√	√	√	√
DMASS	DTS reload source address	DTRSA094	Undefined	32	FFFF A790$_H$	0	32	√	√	√	√	√	√	√	√	√
DMASS	DTS reload destination address	DTRDA094	Undefined	32	FFFF A794$_H$	0	32	√	√	√	√	√	√	√	√	√
DMASS	DTS reload transfer count	DTRTC094	Undefined	32	FFFF A798$_H$	0	32	√	√	√	√	√	√	√	√	√
DMASS	DTS transfer count compare	DTTCC094	Undefined	32	FFFF A79C$_H$	0	32	√	√	√	√	√	√	√	√	√
DMASS	DTSFSL operation setting	DTFSL094	0000 0000$_H$	32	FFFF A7A0$_H$	0	32	√	√	√	√	√	√	√	√	√
DMASS	DTSFSL transfer request status	DTFST094	0000 0000$_H$	32	FFFF A7A4$_H$	0	32	√	√	√	√	√	√	√	√	√
DMASS	DTSFSL transfer request set	DTFSS094	0000 0000$_H$	32	FFFF A7A8$_H$	0	32	√	√	√	√	√	√	√	√	√
DMASS	DTSFSL transfer request clear	DTFSC094	0000 0000$_H$	32	FFFF A7AC$_H$	0	32	√	√	√	√	√	√	√	√	√
DMASS	DTS source address	DTSA095	Undefined	32	FFFF A7C0$_H$	0	32	√	√	√	√	√	√	√	√	√
DMASS	DTS destination address	DTDA095	Undefined	32	FFFF A7C4$_H$	0	32	√	√	√	√	√	√	√	√	√
DMASS	DTS transfer count	DTTC095	Undefined	32	FFFF A7C8$_H$	0	32	√	√	√	√	√	√	√	√	√
DMASS	DTS transfer control	DTTCT095	Undefined	32	FFFF A7CC$_H$	0	32	√	√	√	√	√	√	√	√	√
DMASS	DTS reload source address	DTRSA095	Undefined	32	FFFF A7D0$_H$	0	32	√	√	√	√	√	√	√	√	√
DMASS	DTS reload destination address	DTRDA095	Undefined	32	FFFF A7D4$_H$	0	32	√	√	√	√	√	√	√	√	√
DMASS	DTS reload transfer count	DTRTC095	Undefined	32	FFFF A7D8$_H$	0	32	√	√	√	√	√	√	√	√	√
DMASS	DTS transfer count compare	DTTCC095	Undefined	32	FFFF A7DC$_H$	0	32	√	√	√	√	√	√	√	√	√
DMASS	DTSFSL operation setting	DTFSL095	0000 0000$_H$	32	FFFF A7E0$_H$	0	32	√	√	√	√	√	√	√	√	√
DMASS	DTSFSL transfer request status	DTFST095	0000 0000$_H$	32	FFFF A7E4$_H$	0	32	√	√	√	√	√	√	√	√	√
DMASS	DTSFSL transfer request set	DTFSS095	0000 0000$_H$	32	FFFF A7E8$_H$	0	32	√	√	√	√	√	√	√	√	√
DMASS	DTSFSL transfer request clear	DTFSC095	0000 0000$_H$	32	FFFF A7EC$_H$	0	32	√	√	√	√	√	√	√	√	√
DMASS	DTS source address	DTSA096	Undefined	32	FFFF A800$_H$	0	32	√	√	√	√	√	√	√	√	√
DMASS	DTS destination address	DTDA096	Undefined	32	FFFF A804$_H$	0	32	√	√	√	√	√	√	√	√	√
DMASS	DTS transfer count	DTTC096	Undefined	32	FFFF A808$_H$	0	32	√	√	√	√	√	√	√	√	√
DMASS	DTS transfer control	DTTCT096	Undefined	32	FFFF A80C$_H$	0	32	√	√	√	√	√	√	√	√	√
DMASS	DTS reload source address	DTRSA096	Undefined	32	FFFF A810$_H$	0	32	√	√	√	√	√	√	√	√	√
DMASS	DTS reload destination address	DTRDA096	Undefined	32	FFFF A814$_H$	0	32	√	√	√	√	√	√	√	√	√
DMASS	DTS reload transfer count	DTRTC096	Undefined	32	FFFF A818$_H$	0	32	√	√	√	√	√	√	√	√	√
DMASS	DTS transfer count compare	DTTCC096	Undefined	32	FFFF A81C$_H$	0	32	√	√	√	√	√	√	√	√	√
DMASS	DTSFSL operation setting	DTFSL096	0000 0000$_H$	32	FFFF A820$_H$	0	32	√	√	√	√	√	√	√	√	√
DMASS	DTSFSL transfer request status	DTFST096	0000 0000$_H$	32	FFFF A824$_H$	0	32	√	√	√	√	√	√	√	√	√
DMASS	DTSFSL transfer request set	DTFSS096	0000 0000$_H$	32	FFFF A828$_H$	0	32	√	√	√	√	√	√	√	√	√
DMASS	DTSFSL transfer request clear	DTFSC096	0000 0000$_H$	32	FFFF A82C$_H$	0	32	√	√	√	√	√	√	√	√	√
DMASS	DTS source address	DTSA097	Undefined	32	FFFF A840$_H$	0	32	√	√	√	√	√	√	√	√	√
DMASS	DTS destination address	DTDA097	Undefined	32	FFFF A844$_H$	0	32	√	√	√	√	√	√	√	√	√
DMASS	DTS transfer count	DTTC097	Undefined	32	FFFF A848$_H$	0	32	√	√	√	√	√	√	√	√	√
DMASS	DTS transfer control	DTTCT097	Undefined	32	FFFF A84C$_H$	0	32	√	√	√	√	√	√	√	√	√
DMASS	DTS reload source address	DTRSA097	Undefined	32	FFFF A850$_H$	0	32	√	√	√	√	√	√	√	√	√
DMASS	DTS reload destination address	DTRDA097	Undefined	32	FFFF A854$_H$	0	32	√	√	√	√	√	√	√	√	√
DMASS	DTS reload transfer count	DTRTC097	Undefined	32	FFFF A858$_H$	0	32	√	√	√	√	√	√	√	√	√
DMASS	DTS transfer count compare	DTTCC097	Undefined	32	FFFF A85C$_H$	0	32	√	√	√	√	√	√	√	√	√
DMASS	DTSFSL operation setting	DTFSL097	0000 0000$_H$	32	FFFF A860$_H$	0	32	√	√	√	√	√	√	√	√	√

Table A.1 List of Registers (104/124)

Module	Register	Symbol	Value after Reset	Number of Bits	Address	Peripheral IP group	Access Size	Reset Source*1							Access Authority*1	
								POCRES	CVMRES	EXTRES	DBRES	ECMRES	BISTRES	SWRES	SV	UM
DMASS	DTSFSL transfer request status	DTFST097	0000 0000_H	32	FFFF $A864_H$	0	32	√	√	√	√	√	√	√	√	√
DMASS	DTSFSL transfer request set	DTFSS097	0000 0000_H	32	FFFF $A868_H$	0	32	√	√	√	√	√	√	√	√	√
DMASS	DTSFSL transfer request clear	DTFSC097	0000 0000_H	32	FFFF $A86C_H$	0	32	√	√	√	√	√	√	√	√	√
DMASS	DTS source address	DTSA098	Undefined	32	FFFF $A880_H$	0	32	√	√	√	√	√	√	√	√	√
DMASS	DTS destination address	DTDA098	Undefined	32	FFFF $A884_H$	0	32	√	√	√	√	√	√	√	√	√
DMASS	DTS transfer count	DTTC098	Undefined	32	FFFF $A888_H$	0	32	√	√	√	√	√	√	√	√	√
DMASS	DTS transfer control	DTTCT098	Undefined	32	FFFF $A88C_H$	0	32	√	√	√	√	√	√	√	√	√
DMASS	DTS reload source address	DTRSA098	Undefined	32	FFFF $A890_H$	0	32	√	√	√	√	√	√	√	√	√
DMASS	DTS reload destination address	DTRDA098	Undefined	32	FFFF $A894_H$	0	32	√	√	√	√	√	√	√	√	√
DMASS	DTS reload transfer count	DTRTC098	Undefined	32	FFFF $A898_H$	0	32	√	√	√	√	√	√	√	√	√
DMASS	DTS transfer count compare	DTTCC098	Undefined	32	FFFF $A89C_H$	0	32	√	√	√	√	√	√	√	√	√
DMASS	DTSFSL operation setting	DTFSL098	0000 0000_H	32	FFFF $A8A0_H$	0	32	√	√	√	√	√	√	√	√	√
DMASS	DTSFSL transfer request status	DTFST098	0000 0000_H	32	FFFF $A8A4_H$	0	32	√	√	√	√	√	√	√	√	√
DMASS	DTSFSL transfer request set	DTFSS098	0000 0000_H	32	FFFF $A8A8_H$	0	32	√	√	√	√	√	√	√	√	√
DMASS	DTSFSL transfer request clear	DTFSC098	0000 0000_H	32	FFFF $A8AC_H$	0	32	√	√	√	√	√	√	√	√	√
DMASS	DTS source address	DTSA099	Undefined	32	FFFF $A8C0_H$	0	32	√	√	√	√	√	√	√	√	√
DMASS	DTS destination address	DTDA099	Undefined	32	FFFF $A8C4_H$	0	32	√	√	√	√	√	√	√	√	√
DMASS	DTS transfer count	DTTC099	Undefined	32	FFFF $A8C8_H$	0	32	√	√	√	√	√	√	√	√	√
DMASS	DTS transfer control	DTTCT099	Undefined	32	FFFF $A8CC_H$	0	32	√	√	√	√	√	√	√	√	√
DMASS	DTS reload source address	DTRSA099	Undefined	32	FFFF $A8D0_H$	0	32	√	√	√	√	√	√	√	√	√
DMASS	DTS reload destination address	DTRDA099	Undefined	32	FFFF $A8D4_H$	0	32	√	√	√	√	√	√	√	√	√
DMASS	DTS reload transfer count	DTRTC099	Undefined	32	FFFF $A8D8_H$	0	32	√	√	√	√	√	√	√	√	√
DMASS	DTS transfer count compare	DTTCC099	Undefined	32	FFFF $A8DC_H$	0	32	√	√	√	√	√	√	√	√	√
DMASS	DTSFSL operation setting	DTFSL099	0000 0000_H	32	FFFF $A8E0_H$	0	32	√	√	√	√	√	√	√	√	√
DMASS	DTSFSL transfer request status	DTFST099	0000 0000_H	32	FFFF $A8E4_H$	0	32	√	√	√	√	√	√	√	√	√
DMASS	DTSFSL transfer request set	DTFSS099	0000 0000_H	32	FFFF $A8E8_H$	0	32	√	√	√	√	√	√	√	√	√
DMASS	DTSFSL transfer request clear	DTFSC099	0000 0000_H	32	FFFF $A8EC_H$	0	32	√	√	√	√	√	√	√	√	√
DMASS	DTS source address	DTSA100	Undefined	32	FFFF $A900_H$	0	32	√	√	√	√	√	√	√	√	√
DMASS	DTS destination address	DTDA100	Undefined	32	FFFF $A904_H$	0	32	√	√	√	√	√	√	√	√	√
DMASS	DTS transfer count	DTTC100	Undefined	32	FFFF $A908_H$	0	32	√	√	√	√	√	√	√	√	√
DMASS	DTS transfer control	DTTCT100	Undefined	32	FFFF $A90C_H$	0	32	√	√	√	√	√	√	√	√	√
DMASS	DTS reload source address	DTRSA100	Undefined	32	FFFF $A910_H$	0	32	√	√	√	√	√	√	√	√	√
DMASS	DTS reload destination address	DTRDA100	Undefined	32	FFFF $A914_H$	0	32	√	√	√	√	√	√	√	√	√
DMASS	DTS reload transfer count	DTRTC100	Undefined	32	FFFF $A918_H$	0	32	√	√	√	√	√	√	√	√	√
DMASS	DTS transfer count compare	DTTCC100	Undefined	32	FFFF $A91C_H$	0	32	√	√	√	√	√	√	√	√	√
DMASS	DTSFSL operation setting	DTFSL100	0000 0000_H	32	FFFF $A920_H$	0	32	√	√	√	√	√	√	√	√	√
DMASS	DTSFSL transfer request status	DTFST100	0000 0000_H	32	FFFF $A924_H$	0	32	√	√	√	√	√	√	√	√	√
DMASS	DTSFSL transfer request set	DTFSS100	0000 0000_H	32	FFFF $A928_H$	0	32	√	√	√	√	√	√	√	√	√
DMASS	DTSFSL transfer request clear	DTFSC100	0000 0000_H	32	FFFF $A92C_H$	0	32	√	√	√	√	√	√	√	√	√
DMASS	DTS source address	DTSA101	Undefined	32	FFFF $A940_H$	0	32	√	√	√	√	√	√	√	√	√
DMASS	DTS destination address	DTDA101	Undefined	32	FFFF $A944_H$	0	32	√	√	√	√	√	√	√	√	√
DMASS	DTS transfer count	DTTC101	Undefined	32	FFFF $A948_H$	0	32	√	√	√	√	√	√	√	√	√
DMASS	DTS transfer control	DTTCT101	Undefined	32	FFFF $A94C_H$	0	32	√	√	√	√	√	√	√	√	√
DMASS	DTS reload source address	DTRSA101	Undefined	32	FFFF $A950_H$	0	32	√	√	√	√	√	√	√	√	√
DMASS	DTS reload destination address	DTRDA101	Undefined	32	FFFF $A954_H$	0	32	√	√	√	√	√	√	√	√	√
DMASS	DTS reload transfer count	DTRTC101	Undefined	32	FFFF $A958_H$	0	32	√	√	√	√	√	√	√	√	√
DMASS	DTS transfer count compare	DTTCC101	Undefined	32	FFFF $A95C_H$	0	32	√	√	√	√	√	√	√	√	√
DMASS	DTSFSL operation setting	DTFSL101	0000 0000_H	32	FFFF $A960_H$	0	32	√	√	√	√	√	√	√	√	√
DMASS	DTSFSL transfer request status	DTFST101	0000 0000_H	32	FFFF $A964_H$	0	32	√	√	√	√	√	√	√	√	√
DMASS	DTSFSL transfer request set	DTFSS101	0000 0000_H	32	FFFF $A968_H$	0	32	√	√	√	√	√	√	√	√	√
DMASS	DTSFSL transfer request clear	DTFSC101	0000 0000_H	32	FFFF $A96C_H$	0	32	√	√	√	√	√	√	√	√	√
DMASS	DTS source address	DTSA102	Undefined	32	FFFF $A980_H$	0	32	√	√	√	√	√	√	√	√	√
DMASS	DTS destination address	DTDA102	Undefined	32	FFFF $A984_H$	0	32	√	√	√	√	√	√	√	√	√

Table A.1 List of Registers (105/124)

Module	Register	Symbol	Value after Reset	Number of Bits	Address	Peripheral IP group	Access Size	Reset Source*1							Access Authority*1	
								POCRES	CVMRES	EXTRES	DBRES	ECMRES	BISTRES	SWRES	SV	UM
DMASS	DTS transfer count	DTTC102	Undefined	32	FFFF A988$_H$	0	32	√	√	√	√	√	√	√	√	√
DMASS	DTS transfer control	DTTCT102	Undefined	32	FFFF A98C$_H$	0	32	√	√	√	√	√	√	√	√	√
DMASS	DTS reload source address	DTRSA102	Undefined	32	FFFF A990$_H$	0	32	√	√	√	√	√	√	√	√	√
DMASS	DTS reload destination address	DTRDA102	Undefined	32	FFFF A994$_H$	0	32	√	√	√	√	√	√	√	√	√
DMASS	DTS reload transfer count	DTRTC102	Undefined	32	FFFF A998$_H$	0	32	√	√	√	√	√	√	√	√	√
DMASS	DTS transfer count compare	DTTCC102	Undefined	32	FFFF A99C$_H$	0	32	√	√	√	√	√	√	√	√	√
DMASS	DTSFSL operation setting	DTFSL102	0000 0000$_H$	32	FFFF A9A0$_H$	0	32	√	√	√	√	√	√	√	√	√
DMASS	DTSFSL transfer request status	DTFST102	0000 0000$_H$	32	FFFF A9A4$_H$	0	32	√	√	√	√	√	√	√	√	√
DMASS	DTSFSL transfer request set	DTFSS102	0000 0000$_H$	32	FFFF A9A8$_H$	0	32	√	√	√	√	√	√	√	√	√
DMASS	DTSFSL transfer request clear	DTFSC102	0000 0000$_H$	32	FFFF A9AC$_H$	0	32	√	√	√	√	√	√	√	√	√
DMASS	DTS source address	DTSA103	Undefined	32	FFFF A9C0$_H$	0	32	√	√	√	√	√	√	√	√	√
DMASS	DTS destination address	DTDA103	Undefined	32	FFFF A9C4$_H$	0	32	√	√	√	√	√	√	√	√	√
DMASS	DTS transfer count	DTTC103	Undefined	32	FFFF A9C8$_H$	0	32	√	√	√	√	√	√	√	√	√
DMASS	DTS transfer control	DTTCT103	Undefined	32	FFFF A9CC$_H$	0	32	√	√	√	√	√	√	√	√	√
DMASS	DTS reload source address	DTRSA103	Undefined	32	FFFF A9D0$_H$	0	32	√	√	√	√	√	√	√	√	√
DMASS	DTS reload destination address	DTRDA103	Undefined	32	FFFF A9D4$_H$	0	32	√	√	√	√	√	√	√	√	√
DMASS	DTS reload transfer count	DTRTC103	Undefined	32	FFFF A9D8$_H$	0	32	√	√	√	√	√	√	√	√	√
DMASS	DTS transfer count compare	DTTCC103	Undefined	32	FFFF A9DC$_H$	0	32	√	√	√	√	√	√	√	√	√
DMASS	DTSFSL operation setting	DTFSL103	0000 0000$_H$	32	FFFF A9E0$_H$	0	32	√	√	√	√	√	√	√	√	√
DMASS	DTSFSL transfer request status	DTFST103	0000 0000$_H$	32	FFFF A9E4$_H$	0	32	√	√	√	√	√	√	√	√	√
DMASS	DTSFSL transfer request set	DTFSS103	0000 0000$_H$	32	FFFF A9E8$_H$	0	32	√	√	√	√	√	√	√	√	√
DMASS	DTSFSL transfer request clear	DTFSC103	0000 0000$_H$	32	FFFF A9EC$_H$	0	32	√	√	√	√	√	√	√	√	√
DMASS	DTS source address	DTSA104	Undefined	32	FFFF AA00$_H$	0	32	√	√	√	√	√	√	√	√	√
DMASS	DTS destination address	DTDA104	Undefined	32	FFFF AA04$_H$	0	32	√	√	√	√	√	√	√	√	√
DMASS	DTS transfer count	DTTC104	Undefined	32	FFFF AA08$_H$	0	32	√	√	√	√	√	√	√	√	√
DMASS	DTS transfer control	DTTCT104	Undefined	32	FFFF AA0C$_H$	0	32	√	√	√	√	√	√	√	√	√
DMASS	DTS reload source address	DTRSA104	Undefined	32	FFFF AA10$_H$	0	32	√	√	√	√	√	√	√	√	√
DMASS	DTS reload destination address	DTRDA104	Undefined	32	FFFF AA14$_H$	0	32	√	√	√	√	√	√	√	√	√
DMASS	DTS reload transfer count	DTRTC104	Undefined	32	FFFF AA18$_H$	0	32	√	√	√	√	√	√	√	√	√
DMASS	DTS transfer count compare	DTTCC104	Undefined	32	FFFF AA1C$_H$	0	32	√	√	√	√	√	√	√	√	√
DMASS	DTSFSL operation setting	DTFSL104	0000 0000$_H$	32	FFFF AA20$_H$	0	32	√	√	√	√	√	√	√	√	√
DMASS	DTSFSL transfer request status	DTFST104	0000 0000$_H$	32	FFFF AA24$_H$	0	32	√	√	√	√	√	√	√	√	√
DMASS	DTSFSL transfer request set	DTFSS104	0000 0000$_H$	32	FFFF AA28$_H$	0	32	√	√	√	√	√	√	√	√	√
DMASS	DTSFSL transfer request clear	DTFSC104	0000 0000$_H$	32	FFFF AA2C$_H$	0	32	√	√	√	√	√	√	√	√	√
DMASS	DTS source address	DTSA105	Undefined	32	FFFF AA40$_H$	0	32	√	√	√	√	√	√	√	√	√
DMASS	DTS destination address	DTDA105	Undefined	32	FFFF AA44$_H$	0	32	√	√	√	√	√	√	√	√	√
DMASS	DTS transfer count	DTTC105	Undefined	32	FFFF AA48$_H$	0	32	√	√	√	√	√	√	√	√	√
DMASS	DTS transfer control	DTTCT105	Undefined	32	FFFF AA4C$_H$	0	32	√	√	√	√	√	√	√	√	√
DMASS	DTS reload source address	DTRSA105	Undefined	32	FFFF AA50$_H$	0	32	√	√	√	√	√	√	√	√	√
DMASS	DTS reload destination address	DTRDA105	Undefined	32	FFFF AA54$_H$	0	32	√	√	√	√	√	√	√	√	√
DMASS	DTS reload transfer count	DTRTC105	Undefined	32	FFFF AA58$_H$	0	32	√	√	√	√	√	√	√	√	√
DMASS	DTS transfer count compare	DTTCC105	Undefined	32	FFFF AA5C$_H$	0	32	√	√	√	√	√	√	√	√	√
DMASS	DTSFSL operation setting	DTFSL105	0000 0000$_H$	32	FFFF AA60$_H$	0	32	√	√	√	√	√	√	√	√	√
DMASS	DTSFSL transfer request status	DTFST105	0000 0000$_H$	32	FFFF AA64$_H$	0	32	√	√	√	√	√	√	√	√	√
DMASS	DTSFSL transfer request set	DTFSS105	0000 0000$_H$	32	FFFF AA68$_H$	0	32	√	√	√	√	√	√	√	√	√
DMASS	DTSFSL transfer request clear	DTFSC105	0000 0000$_H$	32	FFFF AA6C$_H$	0	32	√	√	√	√	√	√	√	√	√
DMASS	DTS source address	DTSA106	Undefined	32	FFFF AA80$_H$	0	32	√	√	√	√	√	√	√	√	√
DMASS	DTS destination address	DTDA106	Undefined	32	FFFF AA84$_H$	0	32	√	√	√	√	√	√	√	√	√
DMASS	DTS transfer count	DTTC106	Undefined	32	FFFF AA88$_H$	0	32	√	√	√	√	√	√	√	√	√
DMASS	DTS transfer control	DTTCT106	Undefined	32	FFFF AA8C$_H$	0	32	√	√	√	√	√	√	√	√	√
DMASS	DTS reload source address	DTRSA106	Undefined	32	FFFF AA90$_H$	0	32	√	√	√	√	√	√	√	√	√
DMASS	DTS reload destination address	DTRDA106	Undefined	32	FFFF AA94$_H$	0	32	√	√	√	√	√	√	√	√	√
DMASS	DTS reload transfer count	DTRTC106	Undefined	32	FFFF AA98$_H$	0	32	√	√	√	√	√	√	√	√	√

Table A.1 List of Registers (106/124)

Module	Register	Symbol	Value after Reset	Number of Bits	Address	Peripheral IP group	Access Size	Reset Source*1							Access Authority*1	
								POCRES	CVMRES	EXTRES	DBRES	ECMRES	BISTRES	SWRES	SV	UM
DMASS	DTS transfer count compare	DTTCC106	Undefined	32	FFFF AA9C$_H$	0	32	√	√	√	√	√	√	√	√	√
DMASS	DTSFSL operation setting	DTFSL106	0000 0000$_H$	32	FFFF AAA0$_H$	0	32	√	√	√	√	√	√	√	√	√
DMASS	DTSFSL transfer request status	DTFST106	0000 0000$_H$	32	FFFF AAA4$_H$	0	32	√	√	√	√	√	√	√	√	√
DMASS	DTSFSL transfer request set	DTFSS106	0000 0000$_H$	32	FFFF AAA8$_H$	0	32	√	√	√	√	√	√	√	√	√
DMASS	DTSFSL transfer request clear	DTFSC106	0000 0000$_H$	32	FFFF AAAC$_H$	0	32	√	√	√	√	√	√	√	√	√
DMASS	DTS source address	DTSA107	Undefined	32	FFFF AAC0$_H$	0	32	√	√	√	√	√	√	√	√	√
DMASS	DTS destination address	DTDA107	Undefined	32	FFFF AAC4$_H$	0	32	√	√	√	√	√	√	√	√	√
DMASS	DTS transfer count	DTTC107	Undefined	32	FFFF AAC8$_H$	0	32	√	√	√	√	√	√	√	√	√
DMASS	DTS transfer control	DTTCT107	Undefined	32	FFFF AACC$_H$	0	32	√	√	√	√	√	√	√	√	√
DMASS	DTS reload source address	DTRSA107	Undefined	32	FFFF AAD0$_H$	0	32	√	√	√	√	√	√	√	√	√
DMASS	DTS reload destination address	DTRDA107	Undefined	32	FFFF AAD4$_H$	0	32	√	√	√	√	√	√	√	√	√
DMASS	DTS reload transfer count	DTRTC107	Undefined	32	FFFF AAD8$_H$	0	32	√	√	√	√	√	√	√	√	√
DMASS	DTS transfer count compare	DTTCC107	Undefined	32	FFFF AADC$_H$	0	32	√	√	√	√	√	√	√	√	√
DMASS	DTSFSL operation setting	DTFSL107	0000 0000$_H$	32	FFFF AAE0$_H$	0	32	√	√	√	√	√	√	√	√	√
DMASS	DTSFSL transfer request status	DTFST107	0000 0000$_H$	32	FFFF AAE4$_H$	0	32	√	√	√	√	√	√	√	√	√
DMASS	DTSFSL transfer request set	DTFSS107	0000 0000$_H$	32	FFFF AAE8$_H$	0	32	√	√	√	√	√	√	√	√	√
DMASS	DTSFSL transfer request clear	DTFSC107	0000 0000$_H$	32	FFFF AAEC$_H$	0	32	√	√	√	√	√	√	√	√	√
DMASS	DTS source address	DTSA108	Undefined	32	FFFF AB00$_H$	0	32	√	√	√	√	√	√	√	√	√
DMASS	DTS destination address	DTDA108	Undefined	32	FFFF AB04$_H$	0	32	√	√	√	√	√	√	√	√	√
DMASS	DTS transfer count	DTTC108	Undefined	32	FFFF AB08$_H$	0	32	√	√	√	√	√	√	√	√	√
DMASS	DTS transfer control	DTTCT108	Undefined	32	FFFF AB0C$_H$	0	32	√	√	√	√	√	√	√	√	√
DMASS	DTS reload source address	DTRSA108	Undefined	32	FFFF AB10$_H$	0	32	√	√	√	√	√	√	√	√	√
DMASS	DTS reload destination address	DTRDA108	Undefined	32	FFFF AB14$_H$	0	32	√	√	√	√	√	√	√	√	√
DMASS	DTS reload transfer count	DTRTC108	Undefined	32	FFFF AB18$_H$	0	32	√	√	√	√	√	√	√	√	√
DMASS	DTS transfer count compare	DTTCC108	Undefined	32	FFFF AB1C$_H$	0	32	√	√	√	√	√	√	√	√	√
DMASS	DTSFSL operation setting	DTFSL108	0000 0000$_H$	32	FFFF AB20$_H$	0	32	√	√	√	√	√	√	√	√	√
DMASS	DTSFSL transfer request status	DTFST108	0000 0000$_H$	32	FFFF AB24$_H$	0	32	√	√	√	√	√	√	√	√	√
DMASS	DTSFSL transfer request set	DTFSS108	0000 0000$_H$	32	FFFF AB28$_H$	0	32	√	√	√	√	√	√	√	√	√
DMASS	DTSFSL transfer request clear	DTFSC108	0000 0000$_H$	32	FFFF AB2C$_H$	0	32	√	√	√	√	√	√	√	√	√
DMASS	DTS source address	DTSA109	Undefined	32	FFFF AB40$_H$	0	32	√	√	√	√	√	√	√	√	√
DMASS	DTS destination address	DTDA109	Undefined	32	FFFF AB44$_H$	0	32	√	√	√	√	√	√	√	√	√
DMASS	DTS transfer count	DTTC109	Undefined	32	FFFF AB48$_H$	0	32	√	√	√	√	√	√	√	√	√
DMASS	DTS transfer control	DTTCT109	Undefined	32	FFFF AB4C$_H$	0	32	√	√	√	√	√	√	√	√	√
DMASS	DTS reload source address	DTRSA109	Undefined	32	FFFF AB50$_H$	0	32	√	√	√	√	√	√	√	√	√
DMASS	DTS reload destination address	DTRDA109	Undefined	32	FFFF AB54$_H$	0	32	√	√	√	√	√	√	√	√	√
DMASS	DTS reload transfer count	DTRTC109	Undefined	32	FFFF AB58$_H$	0	32	√	√	√	√	√	√	√	√	√
DMASS	DTS transfer count compare	DTTCC109	Undefined	32	FFFF AB5C$_H$	0	32	√	√	√	√	√	√	√	√	√
DMASS	DTSFSL operation setting	DTFSL109	0000 0000$_H$	32	FFFF AB60$_H$	0	32	√	√	√	√	√	√	√	√	√
DMASS	DTSFSL transfer request status	DTFST109	0000 0000$_H$	32	FFFF AB64$_H$	0	32	√	√	√	√	√	√	√	√	√
DMASS	DTSFSL transfer request set	DTFSS109	0000 0000$_H$	32	FFFF AB68$_H$	0	32	√	√	√	√	√	√	√	√	√
DMASS	DTSFSL transfer request clear	DTFSC109	0000 0000$_H$	32	FFFF AB6C$_H$	0	32	√	√	√	√	√	√	√	√	√
DMASS	DTS source address	DTSA110	Undefined	32	FFFF AB80$_H$	0	32	√	√	√	√	√	√	√	√	√
DMASS	DTS destination address	DTDA110	Undefined	32	FFFF AB84$_H$	0	32	√	√	√	√	√	√	√	√	√
DMASS	DTS transfer count	DTTC110	Undefined	32	FFFF AB88$_H$	0	32	√	√	√	√	√	√	√	√	√
DMASS	DTS transfer control	DTTCT110	Undefined	32	FFFF AB8C$_H$	0	32	√	√	√	√	√	√	√	√	√
DMASS	DTS reload source address	DTRSA110	Undefined	32	FFFF AB90$_H$	0	32	√	√	√	√	√	√	√	√	√
DMASS	DTS reload destination address	DTRDA110	Undefined	32	FFFF AB94$_H$	0	32	√	√	√	√	√	√	√	√	√
DMASS	DTS reload transfer count	DTRTC110	Undefined	32	FFFF AB98$_H$	0	32	√	√	√	√	√	√	√	√	√
DMASS	DTS transfer count compare	DTTCC110	Undefined	32	FFFF AB9C$_H$	0	32	√	√	√	√	√	√	√	√	√
DMASS	DTSFSL operation setting	DTFSL110	0000 0000$_H$	32	FFFF ABA0$_H$	0	32	√	√	√	√	√	√	√	√	√
DMASS	DTSFSL transfer request status	DTFST110	0000 0000$_H$	32	FFFF ABA4$_H$	0	32	√	√	√	√	√	√	√	√	√
DMASS	DTSFSL transfer request set	DTFSS110	0000 0000$_H$	32	FFFF ABA8$_H$	0	32	√	√	√	√	√	√	√	√	√
DMASS	DTSFSL transfer request clear	DTFSC110	0000 0000$_H$	32	FFFF ABAC$_H$	0	32	√	√	√	√	√	√	√	√	√

Table A.1 List of Registers (107/124)

Module	Register	Symbol	Value after Reset	Number of Bits	Address	Peripheral IP group	Access Size	Reset Source*1							Access Authority*1	
								POCRES	CVMRES	EXTRES	DBRES	ECMRES	BISTRES	SWRES	SV	UM
DMASS	DTS source address	DTSA111	Undefined	32	FFFF ABC0$_H$	0	32	√	√	√	√	√	√	√	√	√
DMASS	DTS destination address	DTDA111	Undefined	32	FFFF ABC4$_H$	0	32	√	√	√	√	√	√	√	√	√
DMASS	DTS transfer count	DTTC111	Undefined	32	FFFF ABC8$_H$	0	32	√	√	√	√	√	√	√	√	√
DMASS	DTS transfer control	DTTCT111	Undefined	32	FFFF ABCC$_H$	0	32	√	√	√	√	√	√	√	√	√
DMASS	DTS reload source address	DTRSA111	Undefined	32	FFFF ABD0$_H$	0	32	√	√	√	√	√	√	√	√	√
DMASS	DTS reload destination address	DTRDA111	Undefined	32	FFFF ABD4$_H$	0	32	√	√	√	√	√	√	√	√	√
DMASS	DTS reload transfer count	DTRTC111	Undefined	32	FFFF ABD8$_H$	0	32	√	√	√	√	√	√	√	√	√
DMASS	DTS transfer count compare	DTTCC111	Undefined	32	FFFF ABDC$_H$	0	32	√	√	√	√	√	√	√	√	√
DMASS	DTSFSL operation setting	DTFSL111	0000 0000$_H$	32	FFFF ABE0$_H$	0	32	√	√	√	√	√	√	√	√	√
DMASS	DTSFSL transfer request status	DTFST111	0000 0000$_H$	32	FFFF ABE4$_H$	0	32	√	√	√	√	√	√	√	√	√
DMASS	DTSFSL transfer request set	DTFSS111	0000 0000$_H$	32	FFFF ABE8$_H$	0	32	√	√	√	√	√	√	√	√	√
DMASS	DTSFSL transfer request clear	DTFSC111	0000 0000$_H$	32	FFFF ABEC$_H$	0	32	√	√	√	√	√	√	√	√	√
DMASS	DTS source address	DTSA112	Undefined	32	FFFF AC00$_H$	0	32	√	√	√	√	√	√	√	√	√
DMASS	DTS destination address	DTDA112	Undefined	32	FFFF AC04$_H$	0	32	√	√	√	√	√	√	√	√	√
DMASS	DTS transfer count	DTTC112	Undefined	32	FFFF AC08$_H$	0	32	√	√	√	√	√	√	√	√	√
DMASS	DTS transfer control	DTTCT112	Undefined	32	FFFF AC0C$_H$	0	32	√	√	√	√	√	√	√	√	√
DMASS	DTS reload source address	DTRSA112	Undefined	32	FFFF AC10$_H$	0	32	√	√	√	√	√	√	√	√	√
DMASS	DTS reload destination address	DTRDA112	Undefined	32	FFFF AC14$_H$	0	32	√	√	√	√	√	√	√	√	√
DMASS	DTS reload transfer count	DTRTC112	Undefined	32	FFFF AC18$_H$	0	32	√	√	√	√	√	√	√	√	√
DMASS	DTS transfer count compare	DTTCC112	Undefined	32	FFFF AC1C$_H$	0	32	√	√	√	√	√	√	√	√	√
DMASS	DTSFSL operation setting	DTFSL112	0000 0000$_H$	32	FFFF AC20$_H$	0	32	√	√	√	√	√	√	√	√	√
DMASS	DTSFSL transfer request status	DTFST112	0000 0000$_H$	32	FFFF AC24$_H$	0	32	√	√	√	√	√	√	√	√	√
DMASS	DTSFSL transfer request set	DTFSS112	0000 0000$_H$	32	FFFF AC28$_H$	0	32	√	√	√	√	√	√	√	√	√
DMASS	DTSFSL transfer request clear	DTFSC112	0000 0000$_H$	32	FFFF AC2C$_H$	0	32	√	√	√	√	√	√	√	√	√
DMASS	DTS source address	DTSA113	Undefined	32	FFFF AC40$_H$	0	32	√	√	√	√	√	√	√	√	√
DMASS	DTS destination address	DTDA113	Undefined	32	FFFF AC44$_H$	0	32	√	√	√	√	√	√	√	√	√
DMASS	DTS transfer count	DTTC113	Undefined	32	FFFF AC48$_H$	0	32	√	√	√	√	√	√	√	√	√
DMASS	DTS transfer control	DTTCT113	Undefined	32	FFFF AC4C$_H$	0	32	√	√	√	√	√	√	√	√	√
DMASS	DTS reload source address	DTRSA113	Undefined	32	FFFF AC50$_H$	0	32	√	√	√	√	√	√	√	√	√
DMASS	DTS reload destination address	DTRDA113	Undefined	32	FFFF AC54$_H$	0	32	√	√	√	√	√	√	√	√	√
DMASS	DTS reload transfer count	DTRTC113	Undefined	32	FFFF AC58$_H$	0	32	√	√	√	√	√	√	√	√	√
DMASS	DTS transfer count compare	DTTCC113	Undefined	32	FFFF AC5C$_H$	0	32	√	√	√	√	√	√	√	√	√
DMASS	DTSFSL operation setting	DTFSL113	0000 0000$_H$	32	FFFF AC60$_H$	0	32	√	√	√	√	√	√	√	√	√
DMASS	DTSFSL transfer request status	DTFST113	0000 0000$_H$	32	FFFF AC64$_H$	0	32	√	√	√	√	√	√	√	√	√
DMASS	DTSFSL transfer request set	DTFSS113	0000 0000$_H$	32	FFFF AC68$_H$	0	32	√	√	√	√	√	√	√	√	√
DMASS	DTSFSL transfer request clear	DTFSC113	0000 0000$_H$	32	FFFF AC6C$_H$	0	32	√	√	√	√	√	√	√	√	√
DMASS	DTS source address	DTSA114	Undefined	32	FFFF AC80$_H$	0	32	√	√	√	√	√	√	√	√	√
DMASS	DTS destination address	DTDA114	Undefined	32	FFFF AC84$_H$	0	32	√	√	√	√	√	√	√	√	√
DMASS	DTS transfer count	DTTC114	Undefined	32	FFFF AC88$_H$	0	32	√	√	√	√	√	√	√	√	√
DMASS	DTS transfer control	DTTCT114	Undefined	32	FFFF AC8C$_H$	0	32	√	√	√	√	√	√	√	√	√
DMASS	DTS reload source address	DTRSA114	Undefined	32	FFFF AC90$_H$	0	32	√	√	√	√	√	√	√	√	√
DMASS	DTS reload destination address	DTRDA114	Undefined	32	FFFF AC94$_H$	0	32	√	√	√	√	√	√	√	√	√
DMASS	DTS reload transfer count	DTRTC114	Undefined	32	FFFF AC98$_H$	0	32	√	√	√	√	√	√	√	√	√
DMASS	DTS transfer count compare	DTTCC114	Undefined	32	FFFF AC9C$_H$	0	32	√	√	√	√	√	√	√	√	√
DMASS	DTSFSL operation setting	DTFSL114	0000 0000$_H$	32	FFFF ACA0$_H$	0	32	√	√	√	√	√	√	√	√	√
DMASS	DTSFSL transfer request status	DTFST114	0000 0000$_H$	32	FFFF ACA4$_H$	0	32	√	√	√	√	√	√	√	√	√
DMASS	DTSFSL transfer request set	DTFSS114	0000 0000$_H$	32	FFFF ACA8$_H$	0	32	√	√	√	√	√	√	√	√	√
DMASS	DTSFSL transfer request clear	DTFSC114	0000 0000$_H$	32	FFFF ACAC$_H$	0	32	√	√	√	√	√	√	√	√	√
DMASS	DTS source address	DTSA115	Undefined	32	FFFF ACC0$_H$	0	32	√	√	√	√	√	√	√	√	√
DMASS	DTS destination address	DTDA115	Undefined	32	FFFF ACC4$_H$	0	32	√	√	√	√	√	√	√	√	√
DMASS	DTS transfer count	DTTC115	Undefined	32	FFFF ACC8$_H$	0	32	√	√	√	√	√	√	√	√	√
DMASS	DTS transfer control	DTTCT115	Undefined	32	FFFF ACCC$_H$	0	32	√	√	√	√	√	√	√	√	√
DMASS	DTS reload source address	DTRSA115	Undefined	32	FFFF ACD0$_H$	0	32	√	√	√	√	√	√	√	√	√

Table A.1 List of Registers (108/124)

Module	Register	Symbol	Value after Reset	Number of Bits	Address	Peripheral IP group	Access Size	Reset Source*1							Access Authority*1	
								POCRES	CVMRES	EXTRES	DBRES	ECMRES	BISTRES	SWRES	SV	UM
DMASS	DTS reload destination address	DTRDA115	Undefined	32	FFFF ACD4$_H$	0	32	√	√	√	√	√	√	√	√	√
DMASS	DTS reload transfer count	DTRTC115	Undefined	32	FFFF ACD8$_H$	0	32	√	√	√	√	√	√	√	√	√
DMASS	DTS transfer count compare	DTTCC115	Undefined	32	FFFF ACDC$_H$	0	32	√	√	√	√	√	√	√	√	√
DMASS	DTSFSL operation setting	DTFSL115	0000 0000$_H$	32	FFFF ACE0$_H$	0	32	√	√	√	√	√	√	√	√	√
DMASS	DTSFSL transfer request status	DTFST115	0000 0000$_H$	32	FFFF ACE4$_H$	0	32	√	√	√	√	√	√	√	√	√
DMASS	DTSFSL transfer request set	DTFSS115	0000 0000$_H$	32	FFFF ACE8$_H$	0	32	√	√	√	√	√	√	√	√	√
DMASS	DTSFSL transfer request clear	DTFSC115	0000 0000$_H$	32	FFFF ACEC$_H$	0	32	√	√	√	√	√	√	√	√	√
DMASS	DTS source address	DTSA116	Undefined	32	FFFF AD00$_H$	0	32	√	√	√	√	√	√	√	√	√
DMASS	DTS destination address	DTDA116	Undefined	32	FFFF AD04$_H$	0	32	√	√	√	√	√	√	√	√	√
DMASS	DTS transfer count	DTTC116	Undefined	32	FFFF AD08$_H$	0	32	√	√	√	√	√	√	√	√	√
DMASS	DTS transfer control	DTTCT116	Undefined	32	FFFF AD0C$_H$	0	32	√	√	√	√	√	√	√	√	√
DMASS	DTS reload source address	DTRSA116	Undefined	32	FFFF AD10$_H$	0	32	√	√	√	√	√	√	√	√	√
DMASS	DTS reload destination address	DTRDA116	Undefined	32	FFFF AD14$_H$	0	32	√	√	√	√	√	√	√	√	√
DMASS	DTS reload transfer count	DTRTC116	Undefined	32	FFFF AD18$_H$	0	32	√	√	√	√	√	√	√	√	√
DMASS	DTS transfer count compare	DTTCC116	Undefined	32	FFFF AD1C$_H$	0	32	√	√	√	√	√	√	√	√	√
DMASS	DTSFSL operation setting	DTFSL116	0000 0000$_H$	32	FFFF AD20$_H$	0	32	√	√	√	√	√	√	√	√	√
DMASS	DTSFSL transfer request status	DTFST116	0000 0000$_H$	32	FFFF AD24$_H$	0	32	√	√	√	√	√	√	√	√	√
DMASS	DTSFSL transfer request set	DTFSS116	0000 0000$_H$	32	FFFF AD28$_H$	0	32	√	√	√	√	√	√	√	√	√
DMASS	DTSFSL transfer request clear	DTFSC116	0000 0000$_H$	32	FFFF AD2C$_H$	0	32	√	√	√	√	√	√	√	√	√
DMASS	DTS source address	DTSA117	Undefined	32	FFFF AD40$_H$	0	32	√	√	√	√	√	√	√	√	√
DMASS	DTS destination address	DTDA117	Undefined	32	FFFF AD44$_H$	0	32	√	√	√	√	√	√	√	√	√
DMASS	DTS transfer count	DTTC117	Undefined	32	FFFF AD48$_H$	0	32	√	√	√	√	√	√	√	√	√
DMASS	DTS transfer control	DTTCT117	Undefined	32	FFFF AD4C$_H$	0	32	√	√	√	√	√	√	√	√	√
DMASS	DTS reload source address	DTRSA117	Undefined	32	FFFF AD50$_H$	0	32	√	√	√	√	√	√	√	√	√
DMASS	DTS reload destination address	DTRDA117	Undefined	32	FFFF AD54$_H$	0	32	√	√	√	√	√	√	√	√	√
DMASS	DTS reload transfer count	DTRTC117	Undefined	32	FFFF AD58$_H$	0	32	√	√	√	√	√	√	√	√	√
DMASS	DTS transfer count compare	DTTCC117	Undefined	32	FFFF AD5C$_H$	0	32	√	√	√	√	√	√	√	√	√
DMASS	DTSFSL operation setting	DTFSL117	0000 0000$_H$	32	FFFF AD60$_H$	0	32	√	√	√	√	√	√	√	√	√
DMASS	DTSFSL transfer request status	DTFST117	0000 0000$_H$	32	FFFF AD64$_H$	0	32	√	√	√	√	√	√	√	√	√
DMASS	DTSFSL transfer request set	DTFSS117	0000 0000$_H$	32	FFFF AD68$_H$	0	32	√	√	√	√	√	√	√	√	√
DMASS	DTSFSL transfer request clear	DTFSC117	0000 0000$_H$	32	FFFF AD6C$_H$	0	32	√	√	√	√	√	√	√	√	√
DMASS	DTS source address	DTSA118	Undefined	32	FFFF AD80$_H$	0	32	√	√	√	√	√	√	√	√	√
DMASS	DTS destination address	DTDA118	Undefined	32	FFFF AD84$_H$	0	32	√	√	√	√	√	√	√	√	√
DMASS	DTS transfer count	DTTC118	Undefined	32	FFFF AD88$_H$	0	32	√	√	√	√	√	√	√	√	√
DMASS	DTS transfer control	DTTCT118	Undefined	32	FFFF AD8C$_H$	0	32	√	√	√	√	√	√	√	√	√
DMASS	DTS reload source address	DTRSA118	Undefined	32	FFFF AD90$_H$	0	32	√	√	√	√	√	√	√	√	√
DMASS	DTS reload destination address	DTRDA118	Undefined	32	FFFF AD94$_H$	0	32	√	√	√	√	√	√	√	√	√
DMASS	DTS reload transfer count	DTRTC118	Undefined	32	FFFF AD98$_H$	0	32	√	√	√	√	√	√	√	√	√
DMASS	DTS transfer count compare	DTTCC118	Undefined	32	FFFF AD9C$_H$	0	32	√	√	√	√	√	√	√	√	√
DMASS	DTSFSL operation setting	DTFSL118	0000 0000$_H$	32	FFFF ADA0$_H$	0	32	√	√	√	√	√	√	√	√	√
DMASS	DTSFSL transfer request status	DTFST118	0000 0000$_H$	32	FFFF ADA4$_H$	0	32	√	√	√	√	√	√	√	√	√
DMASS	DTSFSL transfer request set	DTFSS118	0000 0000$_H$	32	FFFF ADA8$_H$	0	32	√	√	√	√	√	√	√	√	√
DMASS	DTSFSL transfer request clear	DTFSC118	0000 0000$_H$	32	FFFF ADAC$_H$	0	32	√	√	√	√	√	√	√	√	√
DMASS	DTS source address	DTSA119	Undefined	32	FFFF ADC0$_H$	0	32	√	√	√	√	√	√	√	√	√
DMASS	DTS destination address	DTDA119	Undefined	32	FFFF ADC4$_H$	0	32	√	√	√	√	√	√	√	√	√
DMASS	DTS transfer count	DTTC119	Undefined	32	FFFF ADC8$_H$	0	32	√	√	√	√	√	√	√	√	√
DMASS	DTS transfer control	DTTCT119	Undefined	32	FFFF ADCC$_H$	0	32	√	√	√	√	√	√	√	√	√
DMASS	DTS reload source address	DTRSA119	Undefined	32	FFFF ADD0$_H$	0	32	√	√	√	√	√	√	√	√	√
DMASS	DTS reload destination address	DTRDA119	Undefined	32	FFFF ADD4$_H$	0	32	√	√	√	√	√	√	√	√	√
DMASS	DTS reload transfer count	DTRTC119	Undefined	32	FFFF ADD8$_H$	0	32	√	√	√	√	√	√	√	√	√
DMASS	DTS transfer count compare	DTTCC119	Undefined	32	FFFF ADDC$_H$	0	32	√	√	√	√	√	√	√	√	√
DMASS	DTSFSL operation setting	DTFSL119	0000 0000$_H$	32	FFFF ADE0$_H$	0	32	√	√	√	√	√	√	√	√	√
DMASS	DTSFSL transfer request status	DTFST119	0000 0000$_H$	32	FFFF ADE4$_H$	0	32	√	√	√	√	√	√	√	√	√

Table A.1 List of Registers (109/124)

Module	Register	Symbol	Value after Reset	Number of Bits	Address	Peripheral IP group	Access Size	Reset Source*1							Access Authority*1	
								POCRES	CVMRES	EXTRES	DBRES	ECMRES	BISTRES	SWRES	SV	UM
DMASS	DTSFSL transfer request set	DTFSS119	0000 0000_H	32	FFFF $ADE8_H$	0	32	√	√	√	√	√	√	√	√	√
DMASS	DTSFSL transfer request clear	DTFSC119	0000 0000_H	32	FFFF $ADEC_H$	0	32	√	√	√	√	√	√	√	√	√
DMASS	DTS source address	DTSA120	Undefined	32	FFFF $AE00_H$	0	32	√	√	√	√	√	√	√	√	√
DMASS	DTS destination address	DTDA120	Undefined	32	FFFF $AE04_H$	0	32	√	√	√	√	√	√	√	√	√
DMASS	DTS transfer count	DTTC120	Undefined	32	FFFF $AE08_H$	0	32	√	√	√	√	√	√	√	√	√
DMASS	DTS transfer control	DTTCT120	Undefined	32	FFFF $AE0C_H$	0	32	√	√	√	√	√	√	√	√	√
DMASS	DTS reload source address	DTRSA120	Undefined	32	FFFF $AE10_H$	0	32	√	√	√	√	√	√	√	√	√
DMASS	DTS reload destination address	DTRDA120	Undefined	32	FFFF $AE14_H$	0	32	√	√	√	√	√	√	√	√	√
DMASS	DTS reload transfer count	DTRTC120	Undefined	32	FFFF $AE18_H$	0	32	√	√	√	√	√	√	√	√	√
DMASS	DTS transfer count compare	DTTCC120	Undefined	32	FFFF $AE1C_H$	0	32	√	√	√	√	√	√	√	√	√
DMASS	DTSFSL operation setting	DTFSL120	0000 0000_H	32	FFFF $AE20_H$	0	32	√	√	√	√	√	√	√	√	√
DMASS	DTSFSL transfer request status	DTFST120	0000 0000_H	32	FFFF $AE24_H$	0	32	√	√	√	√	√	√	√	√	√
DMASS	DTSFSL transfer request set	DTFSS120	0000 0000_H	32	FFFF $AE28_H$	0	32	√	√	√	√	√	√	√	√	√
DMASS	DTSFSL transfer request clear	DTFSC120	0000 0000_H	32	FFFF $AE2C_H$	0	32	√	√	√	√	√	√	√	√	√
DMASS	DTS source address	DTSA121	Undefined	32	FFFF $AE40_H$	0	32	√	√	√	√	√	√	√	√	√
DMASS	DTS destination address	DTDA121	Undefined	32	FFFF $AE44_H$	0	32	√	√	√	√	√	√	√	√	√
DMASS	DTS transfer count	DTTC121	Undefined	32	FFFF $AE48_H$	0	32	√	√	√	√	√	√	√	√	√
DMASS	DTS transfer control	DTTCT121	Undefined	32	FFFF $AE4C_H$	0	32	√	√	√	√	√	√	√	√	√
DMASS	DTS reload source address	DTRSA121	Undefined	32	FFFF $AE50_H$	0	32	√	√	√	√	√	√	√	√	√
DMASS	DTS reload destination address	DTRDA121	Undefined	32	FFFF $AE54_H$	0	32	√	√	√	√	√	√	√	√	√
DMASS	DTS reload transfer count	DTRTC121	Undefined	32	FFFF $AE58_H$	0	32	√	√	√	√	√	√	√	√	√
DMASS	DTS transfer count compare	DTTCC121	Undefined	32	FFFF $AE5C_H$	0	32	√	√	√	√	√	√	√	√	√
DMASS	DTSFSL operation setting	DTFSL121	0000 0000_H	32	FFFF $AE60_H$	0	32	√	√	√	√	√	√	√	√	√
DMASS	DTSFSL transfer request status	DTFST121	0000 0000_H	32	FFFF $AE64_H$	0	32	√	√	√	√	√	√	√	√	√
DMASS	DTSFSL transfer request set	DTFSS121	0000 0000_H	32	FFFF $AE68_H$	0	32	√	√	√	√	√	√	√	√	√
DMASS	DTSFSL transfer request clear	DTFSC121	0000 0000_H	32	FFFF $AE6C_H$	0	32	√	√	√	√	√	√	√	√	√
DMASS	DTS source address	DTSA122	Undefined	32	FFFF $AE80_H$	0	32	√	√	√	√	√	√	√	√	√
DMASS	DTS destination address	DTDA122	Undefined	32	FFFF $AE84_H$	0	32	√	√	√	√	√	√	√	√	√
DMASS	DTS transfer count	DTTC122	Undefined	32	FFFF $AE88_H$	0	32	√	√	√	√	√	√	√	√	√
DMASS	DTS transfer control	DTTCT122	Undefined	32	FFFF $AE8C_H$	0	32	√	√	√	√	√	√	√	√	√
DMASS	DTS reload source address	DTRSA122	Undefined	32	FFFF $AE90_H$	0	32	√	√	√	√	√	√	√	√	√
DMASS	DTS reload destination address	DTRDA122	Undefined	32	FFFF $AE94_H$	0	32	√	√	√	√	√	√	√	√	√
DMASS	DTS reload transfer count	DTRTC122	Undefined	32	FFFF $AE98_H$	0	32	√	√	√	√	√	√	√	√	√
DMASS	DTS transfer count compare	DTTCC122	Undefined	32	FFFF $AE9C_H$	0	32	√	√	√	√	√	√	√	√	√
DMASS	DTSFSL operation setting	DTFSL122	0000 0000_H	32	FFFF $AEA0_H$	0	32	√	√	√	√	√	√	√	√	√
DMASS	DTSFSL transfer request status	DTFST122	0000 0000_H	32	FFFF $AEA4_H$	0	32	√	√	√	√	√	√	√	√	√
DMASS	DTSFSL transfer request set	DTFSS122	0000 0000_H	32	FFFF $AEA8_H$	0	32	√	√	√	√	√	√	√	√	√
DMASS	DTSFSL transfer request clear	DTFSC122	0000 0000_H	32	FFFF $AEAC_H$	0	32	√	√	√	√	√	√	√	√	√
DMASS	DTS source address	DTSA123	Undefined	32	FFFF $AEC0_H$	0	32	√	√	√	√	√	√	√	√	√
DMASS	DTS destination address	DTDA123	Undefined	32	FFFF $AEC4_H$	0	32	√	√	√	√	√	√	√	√	√
DMASS	DTS transfer count	DTTC123	Undefined	32	FFFF $AEC8_H$	0	32	√	√	√	√	√	√	√	√	√
DMASS	DTS transfer control	DTTCT123	Undefined	32	FFFF $AECC_H$	0	32	√	√	√	√	√	√	√	√	√
DMASS	DTS reload source address	DTRSA123	Undefined	32	FFFF $AED0_H$	0	32	√	√	√	√	√	√	√	√	√
DMASS	DTS reload destination address	DTRDA123	Undefined	32	FFFF $AED4_H$	0	32	√	√	√	√	√	√	√	√	√
DMASS	DTS reload transfer count	DTRTC123	Undefined	32	FFFF $AED8_H$	0	32	√	√	√	√	√	√	√	√	√
DMASS	DTS transfer count compare	DTTCC123	Undefined	32	FFFF $AEDC_H$	0	32	√	√	√	√	√	√	√	√	√
DMASS	DTSFSL operation setting	DTFSL123	0000 0000_H	32	FFFF $AEE0_H$	0	32	√	√	√	√	√	√	√	√	√
DMASS	DTSFSL transfer request status	DTFST123	0000 0000_H	32	FFFF $AEE4_H$	0	32	√	√	√	√	√	√	√	√	√
DMASS	DTSFSL transfer request set	DTFSS123	0000 0000_H	32	FFFF $AEE8_H$	0	32	√	√	√	√	√	√	√	√	√
DMASS	DTSFSL transfer request clear	DTFSC123	0000 0000_H	32	FFFF $AEEC_H$	0	32	√	√	√	√	√	√	√	√	√
DMASS	DTS source address	DTSA124	Undefined	32	FFFF $AF00_H$	0	32	√	√	√	√	√	√	√	√	√
DMASS	DTS destination address	DTDA124	Undefined	32	FFFF $AF04_H$	0	32	√	√	√	√	√	√	√	√	√
DMASS	DTS transfer count	DTTC124	Undefined	32	FFFF $AF08_H$	0	32	√	√	√	√	√	√	√	√	√

Table A.1 List of Registers (110/124)

Module	Register	Symbol	Value after Reset	Number of Bits	Address	Peripheral IP group	Access Size	Reset Source*1							Access Authority*1	
								POCRES	CVMRES	EXTRES	DBRES	ECMRES	BISTRES	SWRES	SV	UM
DMASS	DTS transfer control	DTTCT124	Undefined	32	FFFF AF0C$_H$	0	32	√	√	√	√	√	√	√	√	√
DMASS	DTS reload source address	DTRSA124	Undefined	32	FFFF AF10$_H$	0	32	√	√	√	√	√	√	√	√	√
DMASS	DTS reload destination address	DTRDA124	Undefined	32	FFFF AF14$_H$	0	32	√	√	√	√	√	√	√	√	√
DMASS	DTS reload transfer count	DTRTC124	Undefined	32	FFFF AF18$_H$	0	32	√	√	√	√	√	√	√	√	√
DMASS	DTS transfer count compare	DTTCC124	Undefined	32	FFFF AF1C$_H$	0	32	√	√	√	√	√	√	√	√	√
DMASS	DTSFSL operation setting	DTFSL124	0000 0000$_H$	32	FFFF AF20$_H$	0	32	√	√	√	√	√	√	√	√	√
DMASS	DTSFSL transfer request status	DTFST124	0000 0000$_H$	32	FFFF AF24$_H$	0	32	√	√	√	√	√	√	√	√	√
DMASS	DTSFSL transfer request set	DTFSS124	0000 0000$_H$	32	FFFF AF28$_H$	0	32	√	√	√	√	√	√	√	√	√
DMASS	DTSFSL transfer request clear	DTFSC124	0000 0000$_H$	32	FFFF AF2C$_H$	0	32	√	√	√	√	√	√	√	√	√
INTC2	EI level interrupt control register 32	EIC32	008F$_H$	16	FFFF B040$_H$	0	1, 8, 16	√	√	√	√	√	√	√	√	R: √ W: —
INTC2	EI level interrupt control register 33	EIC33	008F$_H$	16	FFFF B042$_H$	0	1, 8, 16	√	√	√	√	√	√	√	√	R: √ W: —
INTC2	EI level interrupt control register 34	EIC34	008F$_H$	16	FFFF B044$_H$	0	1, 8, 16	√	√	√	√	√	√	√	√	R: √ W: —
INTC2	EI level interrupt control register 35	EIC35	008F$_H$	16	FFFF B046$_H$	0	1, 8, 16	√	√	√	√	√	√	√	√	R: √ W: —
INTC2	EI level interrupt control register 36	EIC36	008F$_H$	16	FFFF B048$_H$	0	1, 8, 16	√	√	√	√	√	√	√	√	R: √ W: —
INTC2	EI level interrupt control register 40	EIC40	008F$_H$	16	FFFF B050$_H$	0	1, 8, 16	√	√	√	√	√	√	√	√	R: √ W: —
INTC2	EI level interrupt control register 41	EIC41	008F$_H$	16	FFFF B052$_H$	0	1, 8, 16	√	√	√	√	√	√	√	√	R: √ W: —
INTC2	EI level interrupt control register 42	EIC42	008F$_H$	16	FFFF B054$_H$	0	1, 8, 16	√	√	√	√	√	√	√	√	R: √ W: —
INTC2	EI level interrupt control register 43	EIC43	008F$_H$	16	FFFF B056$_H$	0	1, 8, 16	√	√	√	√	√	√	√	√	R: √ W: —
INTC2	EI level interrupt control register 44	EIC44	008F$_H$	16	FFFF B058$_H$	0	1, 8, 16	√	√	√	√	√	√	√	√	R: √ W: —
INTC2	EI level interrupt control register 45	EIC45	008F$_H$	16	FFFF B05A$_H$	0	1, 8, 16	√	√	√	√	√	√	√	√	R: √ W: —
INTC2	EI level interrupt control register 46	EIC46	008F$_H$	16	FFFF B05C$_H$	0	1, 8, 16	√	√	√	√	√	√	√	√	R: √ W: —
INTC2	EI level interrupt control register 47	EIC47	008F$_H$	16	FFFF B05E$_H$	0	1, 8, 16	√	√	√	√	√	√	√	√	R: √ W: —
INTC2	EI level interrupt control register 48	EIC48	008F$_H$	16	FFFF B060$_H$	0	1, 8, 16	√	√	√	√	√	√	√	√	R: √ W: —
INTC2	EI level interrupt control register 49	EIC49	008F$_H$	16	FFFF B062$_H$	0	1, 8, 16	√	√	√	√	√	√	√	√	R: √ W: —
INTC2	EI level interrupt control register 50	EIC50	008F$_H$	16	FFFF B064$_H$	0	1, 8, 16	√	√	√	√	√	√	√	√	R: √ W: —
INTC2	EI level interrupt control register 51	EIC51	008F$_H$	16	FFFF B066$_H$	0	1, 8, 16	√	√	√	√	√	√	√	√	R: √ W: —
INTC2	EI level interrupt control register 52	EIC52	008F$_H$	16	FFFF B068$_H$	0	1, 8, 16	√	√	√	√	√	√	√	√	R: √ W: —
INTC2	EI level interrupt control register 53	EIC53	008F$_H$	16	FFFF B06A$_H$	0	1, 8, 16	√	√	√	√	√	√	√	√	R: √ W: —
INTC2	EI level interrupt control register 54	EIC54	008F$_H$	16	FFFF B06C$_H$	0	1, 8, 16	√	√	√	√	√	√	√	√	R: √ W: —
INTC2	EI level interrupt control register 55	EIC55	008F$_H$	16	FFFF B06E$_H$	0	1, 8, 16	√	√	√	√	√	√	√	√	R: √ W: —
INTC2	EI level interrupt control register 56	EIC56	008F$_H$	16	FFFF B070$_H$	0	1, 8, 16	√	√	√	√	√	√	√	√	R: √ W: —
INTC2	EI level interrupt control register 57	EIC57	008F$_H$	16	FFFF B072$_H$	0	1, 8, 16	√	√	√	√	√	√	√	√	R: √ W: —
INTC2	EI level interrupt control register 58	EIC58	008F$_H$	16	FFFF B074$_H$	0	1, 8, 16	√	√	√	√	√	√	√	√	R: √ W: —
INTC2	EI level interrupt control register 59	EIC59	008F$_H$	16	FFFF B076$_H$	0	1, 8, 16	√	√	√	√	√	√	√	√	R: √ W: —
INTC2	EI level interrupt control register 60	EIC60	008F$_H$	16	FFFF B078$_H$	0	1, 8, 16	√	√	√	√	√	√	√	√	R: √ W: —
INTC2	EI level interrupt control register 61	EIC61	008F$_H$	16	FFFF B07A$_H$	0	1, 8, 16	√	√	√	√	√	√	√	√	R: √ W: —
INTC2	EI level interrupt control register 62	EIC62	008F$_H$	16	FFFF B07C$_H$	0	1, 8, 16	√	√	√	√	√	√	√	√	R: √ W: —
INTC2	EI level interrupt control register 63	EIC63	008F$_H$	16	FFFF B07E$_H$	0	1, 8, 16	√	√	√	√	√	√	√	√	R: √ W: —

Table A.1 List of Registers (111/124)

Module	Register	Symbol	Value after Reset	Number of Bits	Address	Peripheral IP group	Access Size	Reset Source*1							Access Authority*1	
								POCRES	CVMRES	EXTRES	DBRES	ECMRES	BISTRES	SWRES	SV	UM
INTC2	EI level interrupt control register 64	EIC64	$008F_H$	16	$FFFF\ B080_H$	0	1, 8, 16	√	√	√	√	√	√	√	√	R: √ W: —
INTC2	EI level interrupt control register 65	EIC65	$008F_H$	16	$FFFF\ B082_H$	0	1, 8, 16	√	√	√	√	√	√	√	√	R: √ W: —
INTC2	EI level interrupt control register 66	EIC66	$008F_H$	16	$FFFF\ B084_H$	0	1, 8, 16	√	√	√	√	√	√	√	√	R: √ W: —
INTC2	EI level interrupt control register 67	EIC67	$008F_H$	16	$FFFF\ B086_H$	0	1, 8, 16	√	√	√	√	√	√	√	√	R: √ W: —
INTC2	EI level interrupt control register 68	EIC68	$008F_H$	16	$FFFF\ B088_H$	0	1, 8, 16	√	√	√	√	√	√	√	√	R: √ W: —
INTC2	EI level interrupt control register 69	EIC69	$008F_H$	16	$FFFF\ B08A_H$	0	1, 8, 16	√	√	√	√	√	√	√	√	R: √ W: —
INTC2	EI level interrupt control register 70	EIC70	$008F_H$	16	$FFFF\ B08C_H$	0	1, 8, 16	√	√	√	√	√	√	√	√	R: √ W: —
INTC2	EI level interrupt control register 71	EIC71	$008F_H$	16	$FFFF\ B08E_H$	0	1, 8, 16	√	√	√	√	√	√	√	√	R: √ W: —
INTC2	EI level interrupt control register 72	EIC72	$008F_H$	16	$FFFF\ B090_H$	0	1, 8, 16	√	√	√	√	√	√	√	√	R: √ W: —
INTC2	EI level interrupt control register 73	EIC73	$008F_H$	16	$FFFF\ B092_H$	0	1, 8, 16	√	√	√	√	√	√	√	√	R: √ W: —
INTC2	EI level interrupt control register 74	EIC74	$008F_H$	16	$FFFF\ B094_H$	0	1, 8, 16	√	√	√	√	√	√	√	√	R: √ W: —
INTC2	EI level interrupt control register 75	EIC75	$008F_H$	16	$FFFF\ B096_H$	0	1, 8, 16	√	√	√	√	√	√	√	√	R: √ W: —
INTC2	EI level interrupt control register 76	EIC76	$008F_H$	16	$FFFF\ B098_H$	0	1, 8, 16	√	√	√	√	√	√	√	√	R: √ W: —
INTC2	EI level interrupt control register 77	EIC77	$008F_H$	16	$FFFF\ B09A_H$	0	1, 8, 16	√	√	√	√	√	√	√	√	R: √ W: —
INTC2	EI level interrupt control register 78	EIC78	$008F_H$	16	$FFFF\ B09C_H$	0	1, 8, 16	√	√	√	√	√	√	√	√	R: √ W: —
INTC2	EI level interrupt control register 79	EIC79	$008F_H$	16	$FFFF\ B09E_H$	0	1, 8, 16	√	√	√	√	√	√	√	√	R: √ W: —
INTC2	EI level interrupt control register 80	EIC80	$008F_H$	16	$FFFF\ B0A0_H$	0	1, 8, 16	√	√	√	√	√	√	√	√	R: √ W: —
INTC2	EI level interrupt control register 81	EIC81	$008F_H$	16	$FFFF\ B0A2_H$	0	1, 8, 16	√	√	√	√	√	√	√	√	R: √ W: —
INTC2	EI level interrupt control register 82	EIC82	$008F_H$	16	$FFFF\ B0A4_H$	0	1, 8, 16	√	√	√	√	√	√	√	√	R: √ W: —
INTC2	EI level interrupt control register 83	EIC83	$008F_H$	16	$FFFF\ B0A6_H$	0	1, 8, 16	√	√	√	√	√	√	√	√	R: √ W: —
INTC2	EI level interrupt control register 84	EIC84	$008F_H$	16	$FFFF\ B0A8_H$	0	1, 8, 16	√	√	√	√	√	√	√	√	R: √ W: —
INTC2	EI level interrupt control register 85	EIC85	$008F_H$	16	$FFFF\ B0AA_H$	0	1, 8, 16	√	√	√	√	√	√	√	√	R: √ W: —
INTC2	EI level interrupt control register 86	EIC86	$008F_H$	16	$FFFF\ B0AC_H$	0	1, 8, 16	√	√	√	√	√	√	√	√	R: √ W: —
INTC2	EI level interrupt control register 87	EIC87	$008F_H$	16	$FFFF\ B0AE_H$	0	1, 8, 16	√	√	√	√	√	√	√	√	R: √ W: —
INTC2	EI level interrupt control register 88	EIC88	$008F_H$	16	$FFFF\ B0B0_H$	0	1, 8, 16	√	√	√	√	√	√	√	√	R: √ W: —
INTC2	EI level interrupt control register 89	EIC89	$008F_H$	16	$FFFF\ B0B2_H$	0	1, 8, 16	√	√	√	√	√	√	√	√	R: √ W: —
INTC2	EI level interrupt control register 90	EIC90	$008F_H$	16	$FFFF\ B0B4_H$	0	1, 8, 16	√	√	√	√	√	√	√	√	R: √ W: —
INTC2	EI level interrupt control register 91	EIC91	$008F_H$	16	$FFFF\ B0B6_H$	0	1, 8, 16	√	√	√	√	√	√	√	√	R: √ W: —
INTC2	EI level interrupt control register 92	EIC92	$008F_H$	16	$FFFF\ B0B8_H$	0	1, 8, 16	√	√	√	√	√	√	√	√	R: √ W: —
INTC2	EI level interrupt control register 93	EIC93	$008F_H$	16	$FFFF\ B0BA_H$	0	1, 8, 16	√	√	√	√	√	√	√	√	R: √ W: —
INTC2	EI level interrupt control register 94	EIC94	$008F_H$	16	$FFFF\ B0BC_H$	0	1, 8, 16	√	√	√	√	√	√	√	√	R: √ W: —
INTC2	EI level interrupt control register 95	EIC95	$008F_H$	16	$FFFF\ B0BE_H$	0	1, 8, 16	√	√	√	√	√	√	√	√	R: √ W: —
INTC2	EI level interrupt control register 96	EIC96	$008F_H$	16	$FFFF\ B0C0_H$	0	1, 8, 16	√	√	√	√	√	√	√	√	R: √ W: —
INTC2	EI level interrupt control register 97	EIC97	$008F_H$	16	$FFFF\ B0C2_H$	0	1, 8, 16	√	√	√	√	√	√	√	√	R: √ W: —
INTC2	EI level interrupt control register 98	EIC98	$008F_H$	16	$FFFF\ B0C4_H$	0	1, 8, 16	√	√	√	√	√	√	√	√	R: √ W: —

Table A.1 List of Registers (112/124)

Module	Register	Symbol	Value after Reset	Number of Bits	Address	Peripheral IP group	Access Size	Reset Source*1							Access Authority*1	
								POCRES	CVMRES	EXTRES	DBRES	ECMRES	BISTRES	SWRES	SV	UM
INTC2	EI level interrupt control register 99	EIC99	$008F_H$	16	$FFFF\ B0C6_H$	0	1, 8, 16	√	√	√	√	√	√	√	√	R: √ W: —
INTC2	EI level interrupt control register 100	EIC100	$008F_H$	16	$FFFF\ B0C8_H$	0	1, 8, 16	√	√	√	√	√	√	√	√	R: √ W: —
INTC2	EI level interrupt control register 101	EIC101	$008F_H$	16	$FFFF\ B0CA_H$	0	1, 8, 16	√	√	√	√	√	√	√	√	R: √ W: —
INTC2	EI level interrupt control register 102	EIC102	$008F_H$	16	$FFFF\ B0CC_H$	0	1, 8, 16	√	√	√	√	√	√	√	√	R: √ W: —
INTC2	EI level interrupt control register 103	EIC103	$008F_H$	16	$FFFF\ B0CE_H$	0	1, 8, 16	√	√	√	√	√	√	√	√	R: √ W: —
INTC2	EI level interrupt control register 104	EIC104	$008F_H$	16	$FFFF\ B0D0_H$	0	1, 8, 16	√	√	√	√	√	√	√	√	R: √ W: —
INTC2	EI level interrupt control register 105	EIC105	$008F_H$	16	$FFFF\ B0D2_H$	0	1, 8, 16	√	√	√	√	√	√	√	√	R: √ W: —
INTC2	EI level interrupt control register 106	EIC106	$808F_H$	16	$FFFF\ B0D4_H$	0	1, 8, 16	√	√	√	√	√	√	√	√	R: √ W: —
INTC2	EI level interrupt control register 107	EIC107	$008F_H$	16	$FFFF\ B0D6_H$	0	1, 8, 16	√	√	√	√	√	√	√	√	R: √ W: —
INTC2	EI level interrupt control register 108	EIC108	$008F_H$	16	$FFFF\ B0D8_H$	0	1, 8, 16	√	√	√	√	√	√	√	√	R: √ W: —
INTC2	EI level interrupt control register 109	EIC109	$808F_H$	16	$FFFF\ B0DA_H$	0	1, 8, 16	√	√	√	√	√	√	√	√	R: √ W: —
INTC2	EI level interrupt control register 110	EIC110	$808F_H$	16	$FFFF\ B0DC_H$	0	1, 8, 16	√	√	√	√	√	√	√	√	R: √ W: —
INTC2	EI level interrupt control register 111	EIC111	$008F_H$	16	$FFFF\ B0DE_H$	0	1, 8, 16	√	√	√	√	√	√	√	√	R: √ W: —
INTC2	EI level interrupt control register 112	EIC112	$008F_H$	16	$FFFF\ B0E0_H$	0	1, 8, 16	√	√	√	√	√	√	√	√	R: √ W: —
INTC2	EI level interrupt control register 113	EIC113	$808F_H$	16	$FFFF\ B0E2_H$	0	1, 8, 16	√	√	√	√	√	√	√	√	R: √ W: —
INTC2	EI level interrupt control register 114	EIC114	$008F_H$	16	$FFFF\ B0E4_H$	0	1, 8, 16	√	√	√	√	√	√	√	√	R: √ W: —
INTC2	EI level interrupt control register 115	EIC115	$008F_H$	16	$FFFF\ B0E6_H$	0	1, 8, 16	√	√	√	√	√	√	√	√	R: √ W: —
INTC2	EI level interrupt control register 116	EIC116	$008F_H$	16	$FFFF\ B0E8_H$	0	1, 8, 16	√	√	√	√	√	√	√	√	R: √ W: —
INTC2	EI level interrupt control register 117	EIC117	$008F_H$	16	$FFFF\ B0EA_H$	0	1, 8, 16	√	√	√	√	√	√	√	√	R: √ W: —
INTC2	EI level interrupt control register 118	EIC118	$008F_H$	16	$FFFF\ B0EC_H$	0	1, 8, 16	√	√	√	√	√	√	√	√	R: √ W: —
INTC2	EI level interrupt control register 119	EIC119	$008F_H$	16	$FFFF\ B0EE_H$	0	1, 8, 16	√	√	√	√	√	√	√	√	R: √ W: —
INTC2	EI level interrupt control register 120	EIC120	$808F_H$	16	$FFFF\ B0F0_H$	0	1, 8, 16	√	√	√	√	√	√	√	√	R: √ W: —
INTC2	EI level interrupt control register 121	EIC121	$808F_H$	16	$FFFF\ B0F2_H$	0	1, 8, 16	√	√	√	√	√	√	√	√	R: √ W: —
INTC2	EI level interrupt control register 128	EIC128	$008F_H$	16	$FFFF\ B100_H$	0	1, 8, 16	√	√	√	√	√	√	√	√	R: √ W: —
INTC2	EI level interrupt control register 129	EIC129	$008F_H$	16	$FFFF\ B102_H$	0	1, 8, 16	√	√	√	√	√	√	√	√	R: √ W: —
INTC2	EI level interrupt control register 130	EIC130	$008F_H$	16	$FFFF\ B104_H$	0	1, 8, 16	√	√	√	√	√	√	√	√	R: √ W: —
INTC2	EI level interrupt control register 131	EIC131	$008F_H$	16	$FFFF\ B106_H$	0	1, 8, 16	√	√	√	√	√	√	√	√	R: √ W: —
INTC2	EI level interrupt control register 132	EIC132	$008F_H$	16	$FFFF\ B108_H$	0	1, 8, 16	√	√	√	√	√	√	√	√	R: √ W: —
INTC2	EI level interrupt control register 133	EIC133	$008F_H$	16	$FFFF\ B10A_H$	0	1, 8, 16	√	√	√	√	√	√	√	√	R: √ W: —
INTC2	EI level interrupt control register 134	EIC134	$008F_H$	16	$FFFF\ B10C_H$	0	1, 8, 16	√	√	√	√	√	√	√	√	R: √ W: —
INTC2	EI level interrupt control register 135	EIC135	$008F_H$	16	$FFFF\ B10E_H$	0	1, 8, 16	√	√	√	√	√	√	√	√	R: √ W: —
INTC2	EI level interrupt control register 136	EIC136	$008F_H$	16	$FFFF\ B110_H$	0	1, 8, 16	√	√	√	√	√	√	√	√	R: √ W: —
INTC2	EI level interrupt control register 137	EIC137	$008F_H$	16	$FFFF\ B112_H$	0	1, 8, 16	√	√	√	√	√	√	√	√	R: √ W: —
INTC2	EI level interrupt control register 138	EIC138	$008F_H$	16	$FFFF\ B114_H$	0	1, 8, 16	√	√	√	√	√	√	√	√	R: √ W: —
INTC2	EI level interrupt control register 139	EIC139	$008F_H$	16	$FFFF\ B116_H$	0	1, 8, 16	√	√	√	√	√	√	√	√	R: √ W: —

Table A.1 List of Registers (113/124)

Module	Register	Symbol	Value after Reset	Number of Bits	Address	Peripheral IP group	Access Size	Reset Source*1							Access Authority*1	
								POCRES	CVMRES	EXTRES	DBRES	ECMRES	BISTRES	SWRES	SV	UM
INTC2	EI level interrupt control register 140	EIC140	$008F_H$	16	$FFFF\ B118_H$	0	1, 8, 16	√	√	√	√	√	√	√	√	R: √ W: —
INTC2	EI level interrupt control register 141	EIC141	$008F_H$	16	$FFFF\ B11A_H$	0	1, 8, 16	√	√	√	√	√	√	√	√	R: √ W: —
INTC2	EI level interrupt control register 142	EIC142	$008F_H$	16	$FFFF\ B11C_H$	0	1, 8, 16	√	√	√	√	√	√	√	√	R: √ W: —
INTC2	EI level interrupt control register 143	EIC143	$008F_H$	16	$FFFF\ B11E_H$	0	1, 8, 16	√	√	√	√	√	√	√	√	R: √ W: —
INTC2	EI level interrupt control register 144	EIC144	$008F_H$	16	$FFFF\ B120_H$	0	1, 8, 16	√	√	√	√	√	√	√	√	R: √ W: —
INTC2	EI level interrupt control register 145	EIC145	$008F_H$	16	$FFFF\ B122_H$	0	1, 8, 16	√	√	√	√	√	√	√	√	R: √ W: —
INTC2	EI level interrupt control register 146	EIC146	$008F_H$	16	$FFFF\ B124_H$	0	1, 8, 16	√	√	√	√	√	√	√	√	R: √ W: —
INTC2	EI level interrupt control register 147	EIC147	$008F_H$	16	$FFFF\ B126_H$	0	1, 8, 16	√	√	√	√	√	√	√	√	R: √ W: —
INTC2	EI level interrupt control register 148	EIC148	$008F_H$	16	$FFFF\ B128_H$	0	1, 8, 16	√	√	√	√	√	√	√	√	R: √ W: —
INTC2	EI level interrupt control register 149	EIC149	$008F_H$	16	$FFFF\ B12A_H$	0	1, 8, 16	√	√	√	√	√	√	√	√	R: √ W: —
INTC2	EI level interrupt control register 150	EIC150	$008F_H$	16	$FFFF\ B12C_H$	0	1, 8, 16	√	√	√	√	√	√	√	√	R: √ W: —
INTC2	EI level interrupt control register 151	EIC151	$008F_H$	16	$FFFF\ B12E_H$	0	1, 8, 16	√	√	√	√	√	√	√	√	R: √ W: —
INTC2	EI level interrupt control register 152	EIC152	$008F_H$	16	$FFFF\ B130_H$	0	1, 8, 16	√	√	√	√	√	√	√	√	R: √ W: —
INTC2	EI level interrupt control register 153	EIC153	$008F_H$	16	$FFFF\ B132_H$	0	1, 8, 16	√	√	√	√	√	√	√	√	R: √ W: —
INTC2	EI level interrupt control register 154	EIC154	$008F_H$	16	$FFFF\ B134_H$	0	1, 8, 16	√	√	√	√	√	√	√	√	R: √ W: —
INTC2	EI level interrupt control register 155	EIC155	$008F_H$	16	$FFFF\ B136_H$	0	1, 8, 16	√	√	√	√	√	√	√	√	R: √ W: —
INTC2	EI level interrupt control register 156	EIC156	$008F_H$	16	$FFFF\ B138_H$	0	1, 8, 16	√	√	√	√	√	√	√	√	R: √ W: —
INTC2	EI level interrupt control register 158	EIC158	$008F_H$	16	$FFFF\ B13C_H$	0	1, 8, 16	√	√	√	√	√	√	√	√	R: √ W: —
INTC2	EI level interrupt control register 159	EIC159	$008F_H$	16	$FFFF\ B13E_H$	0	1, 8, 16	√	√	√	√	√	√	√	√	R: √ W: —
INTC2	EI level interrupt control register 160	EIC160	$008F_H$	16	$FFFF\ B140_H$	0	1, 8, 16	√	√	√	√	√	√	√	√	R: √ W: —
INTC2	EI level interrupt control register 161	EIC161	$008F_H$	16	$FFFF\ B142_H$	0	1, 8, 16	√	√	√	√	√	√	√	√	R: √ W: —
INTC2	EI level interrupt control register 162	EIC162	$008F_H$	16	$FFFF\ B144_H$	0	1, 8, 16	√	√	√	√	√	√	√	√	R: √ W: —
INTC2	EI level interrupt control register 163	EIC163	$008F_H$	16	$FFFF\ B146_H$	0	1, 8, 16	√	√	√	√	√	√	√	√	R: √ W: —
INTC2	EI level interrupt control register 164	EIC164	$008F_H$	16	$FFFF\ B148_H$	0	1, 8, 16	√	√	√	√	√	√	√	√	R: √ W: —
INTC2	EI level interrupt control register 165	EIC165	$008F_H$	16	$FFFF\ B14A_H$	0	1, 8, 16	√	√	√	√	√	√	√	√	R: √ W: —
INTC2	EI level interrupt control register 166	EIC166	$008F_H$	16	$FFFF\ B14C_H$	0	1, 8, 16	√	√	√	√	√	√	√	√	R: √ W: —
INTC2	EI level interrupt control register 167	EIC167	$008F_H$	16	$FFFF\ B14E_H$	0	1, 8, 16	√	√	√	√	√	√	√	√	R: √ W: —
INTC2	EI level interrupt control register 168	EIC168	$008F_H$	16	$FFFF\ B150_H$	0	1, 8, 16	√	√	√	√	√	√	√	√	R: √ W: —
INTC2	EI level interrupt control register 169	EIC169	$008F_H$	16	$FFFF\ B152_H$	0	1, 8, 16	√	√	√	√	√	√	√	√	R: √ W: —
INTC2	EI level interrupt control register 170	EIC170	$008F_H$	16	$FFFF\ B154_H$	0	1, 8, 16	√	√	√	√	√	√	√	√	R: √ W: —
INTC2	EI level interrupt control register 171	EIC171	$008F_H$	16	$FFFF\ B156_H$	0	1, 8, 16	√	√	√	√	√	√	√	√	R: √ W: —
INTC2	EI level interrupt control register 172	EIC172	$008F_H$	16	$FFFF\ B158_H$	0	1, 8, 16	√	√	√	√	√	√	√	√	R: √ W: —
INTC2	EI level interrupt control register 173	EIC173	$008F_H$	16	$FFFF\ B15A_H$	0	1, 8, 16	√	√	√	√	√	√	√	√	R: √ W: —
INTC2	EI level interrupt control register 174	EIC174	$008F_H$	16	$FFFF\ B15C_H$	0	1, 8, 16	√	√	√	√	√	√	√	√	R: √ W: —
INTC2	EI level interrupt control register 175	EIC175	$008F_H$	16	$FFFF\ B15E_H$	0	1, 8, 16	√	√	√	√	√	√	√	√	R: √ W: —

Table A.1 List of Registers (114/124)

Module	Register	Symbol	Value after Reset	Number of Bits	Address	Peripheral IP group	Access Size	Reset Source*1							Access Authority*1	
								POCRES	CVMRES	EXTRES	DBRES	ECMRES	BISTRES	SWRES	SV	UM
INTC2	EI level interrupt control register 176	EIC176	$008F_H$	16	$FFFF\ B160_H$	0	1, 8, 16	√	√	√	√	√	√	√	√	R: √ W: —
INTC2	EI level interrupt control register 177	EIC177	$008F_H$	16	$FFFF\ B162_H$	0	1, 8, 16	√	√	√	√	√	√	√	√	R: √ W: —
INTC2	EI level interrupt control register 178	EIC178	$008F_H$	16	$FFFF\ B164_H$	0	1, 8, 16	√	√	√	√	√	√	√	√	R: √ W: —
INTC2	EI level interrupt control register 179	EIC179	$008F_H$	16	$FFFF\ B166_H$	0	1, 8, 16	√	√	√	√	√	√	√	√	R: √ W: —
INTC2	EI level interrupt control register 180	EIC180	$008F_H$	16	$FFFF\ B168_H$	0	1, 8, 16	√	√	√	√	√	√	√	√	R: √ W: —
INTC2	EI level interrupt control register 181	EIC181	$008F_H$	16	$FFFF\ B16A_H$	0	1, 8, 16	√	√	√	√	√	√	√	√	R: √ W: —
INTC2	EI level interrupt control register 182	EIC182	$008F_H$	16	$FFFF\ B16C_H$	0	1, 8, 16	√	√	√	√	√	√	√	√	R: √ W: —
INTC2	EI level interrupt control register 183	EIC183	$808F_H$	16	$FFFF\ B16E_H$	0	1, 8, 16	√	√	√	√	√	√	√	√	R: √ W: —
INTC2	EI level interrupt control register 184	EIC184	$808F_H$	16	$FFFF\ B170_H$	0	1, 8, 16	√	√	√	√	√	√	√	√	R: √ W: —
INTC2	EI level interrupt control register 185	EIC185	$808F_H$	16	$FFFF\ B172_H$	0	1, 8, 16	√	√	√	√	√	√	√	√	R: √ W: —
INTC2	EI level interrupt control register 186	EIC186	$808F_H$	16	$FFFF\ B174_H$	0	1, 8, 16	√	√	√	√	√	√	√	√	R: √ W: —
INTC2	EI level interrupt control register 187	EIC187	$808F_H$	16	$FFFF\ B176_H$	0	1, 8, 16	√	√	√	√	√	√	√	√	R: √ W: —
INTC2	EI level interrupt control register 188	EIC188	$808F_H$	16	$FFFF\ B178_H$	0	1, 8, 16	√	√	√	√	√	√	√	√	R: √ W: —
INTC2	EI level interrupt control register 189	EIC189	$808F_H$	16	$FFFF\ B17A_H$	0	1, 8, 16	√	√	√	√	√	√	√	√	R: √ W: —
INTC2	EI level interrupt control register 190	EIC190	$808F_H$	16	$FFFF\ B17C_H$	0	1, 8, 16	√	√	√	√	√	√	√	√	R: √ W: —
INTC2	EI level interrupt control register 191	EIC191	$808F_H$	16	$FFFF\ B17E_H$	0	1, 8, 16	√	√	√	√	√	√	√	√	R: √ W: —
INTC2	EI level interrupt control register 192	EIC192	$808F_H$	16	$FFFF\ B180_H$	0	1, 8, 16	√	√	√	√	√	√	√	√	R: √ W: —
INTC2	EI level interrupt control register 193	EIC193	$808F_H$	16	$FFFF\ B182_H$	0	1, 8, 16	√	√	√	√	√	√	√	√	R: √ W: —
INTC2	EI level interrupt control register 194	EIC194	$808F_H$	16	$FFFF\ B184_H$	0	1, 8, 16	√	√	√	√	√	√	√	√	R: √ W: —
INTC2	EI level interrupt control register 195	EIC195	$808F_H$	16	$FFFF\ B186_H$	0	1, 8, 16	√	√	√	√	√	√	√	√	R: √ W: —
INTC2	EI level interrupt control register 196	EIC196	$808F_H$	16	$FFFF\ B188_H$	0	1, 8, 16	√	√	√	√	√	√	√	√	R: √ W: —
INTC2	EI level interrupt control register 197	EIC197	$808F_H$	16	$FFFF\ B18A_H$	0	1, 8, 16	√	√	√	√	√	√	√	√	R: √ W: —
INTC2	EI level interrupt control register 198	EIC198	$808F_H$	16	$FFFF\ B18C_H$	0	1, 8, 16	√	√	√	√	√	√	√	√	R: √ W: —
INTC2	EI level interrupt control register 199	EIC199	$808F_H$	16	$FFFF\ B18E_H$	0	1, 8, 16	√	√	√	√	√	√	√	√	R: √ W: —
INTC2	EI level interrupt control register 200	EIC200	$808F_H$	16	$FFFF\ B190_H$	0	1, 8, 16	√	√	√	√	√	√	√	√	R: √ W: —
INTC2	EI level interrupt control register 201	EIC201	$808F_H$	16	$FFFF\ B192_H$	0	1, 8, 16	√	√	√	√	√	√	√	√	R: √ W: —
INTC2	EI level interrupt control register 202	EIC202	$808F_H$	16	$FFFF\ B194_H$	0	1, 8, 16	√	√	√	√	√	√	√	√	R: √ W: —
INTC2	EI level interrupt control register 203	EIC203	$808F_H$	16	$FFFF\ B196_H$	0	1, 8, 16	√	√	√	√	√	√	√	√	R: √ W: —
INTC2	EI level interrupt control register 204	EIC204	$808F_H$	16	$FFFF\ B198_H$	0	1, 8, 16	√	√	√	√	√	√	√	√	R: √ W: —
INTC2	EI level interrupt control register 218	EIC218	$808F_H$	16	$FFFF\ B1B4_H$	0	1, 8, 16	√	√	√	√	√	√	√	√	R: √ W: —
INTC2	EI level interrupt control register 219	EIC219	$008F_H$	16	$FFFF\ B1B6_H$	0	1, 8, 16	√	√	√	√	√	√	√	√	R: √ W: —
INTC2	EI level interrupt control register 220	EIC220	$008F_H$	16	$FFFF\ B1B8_H$	0	1, 8, 16	√	√	√	√	√	√	√	√	R: √ W: —
INTC2	EI level interrupt control register 221	EIC221	$808F_H$	16	$FFFF\ B1BA_H$	0	1, 8, 16	√	√	√	√	√	√	√	√	R: √ W: —
INTC2	EI level interrupt control register 226	EIC226	$808F_H$	16	$FFFF\ B1C4_H$	0	1, 8, 16	√	√	√	√	√	√	√	√	R: √ W: —
INTC2	EI level interrupt control register 227	EIC227	$808F_H$	16	$FFFF\ B1C6_H$	0	1, 8, 16	√	√	√	√	√	√	√	√	R: √ W: —

Table A.1 List of Registers (115/124)

Module	Register	Symbol	Value after Reset	Number of Bits	Address	Peripheral IP group	Access Size	Reset Source*1							Access Authority*1	
								POCRES	CVMRES	EXTRES	DBRES	ECMRES	BISTRES	SWRES	SV	UM
INTC2	EI level interrupt control register 228	EIC228	$808F_H$	16	$FFFF\ B1C8_H$	0	1, 8, 16	√	√	√	√	√	√	√	√	R: √ W: —
INTC2	EI level interrupt control register 229	EIC229	$808F_H$	16	$FFFF\ B1CA_H$	0	1, 8, 16	√	√	√	√	√	√	√	√	R: √ W: —
INTC2	EI level interrupt control register 230	EIC230	$808F_H$	16	$FFFF\ B1CC_H$	0	1, 8, 16	√	√	√	√	√	√	√	√	R: √ W: —
INTC2	EI level interrupt control register 231	EIC231	$808F_H$	16	$FFFF\ B1CE_H$	0	1, 8, 16	√	√	√	√	√	√	√	√	R: √ W: —
INTC2	EI level interrupt control register 232	EIC232	$808F_H$	16	$FFFF\ B1D0_H$	0	1, 8, 16	√	√	√	√	√	√	√	√	R: √ W: —
INTC2	EI level interrupt control register 233	EIC233	$008F_H$	16	$FFFF\ B1D2_H$	0	1, 8, 16	√	√	√	√	√	√	√	√	R: √ W: —
INTC2	EI level interrupt control register 234	EIC234	$808F_H$	16	$FFFF\ B1D4_H$	0	1, 8, 16	√	√	√	√	√	√	√	√	R: √ W: —
INTC2	EI level interrupt control register 235	EIC235	$008F_H$	16	$FFFF\ B1D6_H$	0	1, 8, 16	√	√	√	√	√	√	√	√	R: √ W: —
INTC2	EI level interrupt control register 236	EIC236	$808F_H$	16	$FFFF\ B1D8_H$	0	1, 8, 16	√	√	√	√	√	√	√	√	R: √ W: —
INTC2	EI level interrupt control register 237	EIC237	$008F_H$	16	$FFFF\ B1DA_H$	0	1, 8, 16	√	√	√	√	√	√	√	√	R: √ W: —
INTC2	EI level interrupt control register 238	EIC238	$808F_H$	16	$FFFF\ B1DC_H$	0	1, 8, 16	√	√	√	√	√	√	√	√	R: √ W: —
INTC2	EI level interrupt control register 239	EIC239	$008F_H$	16	$FFFF\ B1DE_H$	0	1, 8, 16	√	√	√	√	√	√	√	√	R: √ W: —
INTC2	EI level interrupt control register 240	EIC240	$808F_H$	16	$FFFF\ B1E0_H$	0	1, 8, 16	√	√	√	√	√	√	√	√	R: √ W: —
INTC2	EI level interrupt control register 241	EIC241	$008F_H$	16	$FFFF\ B1E2_H$	0	1, 8, 16	√	√	√	√	√	√	√	√	R: √ W: —
INTC2	EI level interrupt control register 242	EIC242	$808F_H$	16	$FFFF\ B1E4_H$	0	1, 8, 16	√	√	√	√	√	√	√	√	R: √ W: —
INTC2	EI level interrupt control register 243	EIC243	$008F_H$	16	$FFFF\ B1E6_H$	0	1, 8, 16	√	√	√	√	√	√	√	√	R: √ W: —
INTC2	EI level interrupt control register 244	EIC244	$808F_H$	16	$FFFF\ B1E8_H$	0	1, 8, 16	√	√	√	√	√	√	√	√	R: √ W: —
INTC2	EI level interrupt control register 245	EIC245	$808F_H$	16	$FFFF\ B1EA_H$	0	1, 8, 16	√	√	√	√	√	√	√	√	R: √ W: —
INTC2	EI level interrupt control register 246	EIC246	$808F_H$	16	$FFFF\ B1EC_H$	0	1, 8, 16	√	√	√	√	√	√	√	√	R: √ W: —
INTC2	EI level interrupt control register 247	EIC247	$808F_H$	16	$FFFF\ B1EE_H$	0	1, 8, 16	√	√	√	√	√	√	√	√	R: √ W: —
INTC2	EI level interrupt control register 248	EIC248	$808F_H$	16	$FFFF\ B1F0_H$	0	1, 8, 16	√	√	√	√	√	√	√	√	R: √ W: —
INTC2	EI level interrupt control register 249	EIC249	$808F_H$	16	$FFFF\ B1F2_H$	0	1, 8, 16	√	√	√	√	√	√	√	√	R: √ W: —
INTC2	EI level interrupt control register 250	EIC250	$808F_H$	16	$FFFF\ B1F4_H$	0	1, 8, 16	√	√	√	√	√	√	√	√	R: √ W: —
INTC2	EI level interrupt control register 251	EIC251	$808F_H$	16	$FFFF\ B1F6_H$	0	1, 8, 16	√	√	√	√	√	√	√	√	R: √ W: —
INTC2	EI level interrupt control register 252	EIC252	$808F_H$	16	$FFFF\ B1F8_H$	0	1, 8, 16	√	√	√	√	√	√	√	√	R: √ W: —
INTC2	EI level interrupt control register 253	EIC253	$808F_H$	16	$FFFF\ B1FA_H$	0	1, 8, 16	√	√	√	√	√	√	√	√	R: √ W: —
INTC2	EI level interrupt control register 254	EIC254	$808F_H$	16	$FFFF\ B1FC_H$	0	1, 8, 16	√	√	√	√	√	√	√	√	R: √ W: —
INTC2	EI level interrupt control register 256	EIC256	$008F_H$	16	$FFFF\ B200_H$	0	1, 8, 16	√	√	√	√	√	√	√	√	R: √ W: —
INTC2	EI level interrupt control register 257	EIC257	$008F_H$	16	$FFFF\ B202_H$	0	1, 8, 16	√	√	√	√	√	√	√	√	R: √ W: —
INTC2	EI level interrupt control register 258	EIC258	$008F_H$	16	$FFFF\ B204_H$	0	1, 8, 16	√	√	√	√	√	√	√	√	R: √ W: —
INTC2	EI level interrupt control register 259	EIC259	$008F_H$	16	$FFFF\ B206_H$	0	1, 8, 16	√	√	√	√	√	√	√	√	R: √ W: —
INTC2	EI level interrupt control register 260	EIC260	$008F_H$	16	$FFFF\ B208_H$	0	1, 8, 16	√	√	√	√	√	√	√	√	R: √ W: —
INTC2	EI level interrupt control register 261	EIC261	$008F_H$	16	$FFFF\ B20A_H$	0	1, 8, 16	√	√	√	√	√	√	√	√	R: √ W: —
INTC2	EI level interrupt control register 262	EIC262	$008F_H$	16	$FFFF\ B20C_H$	0	1, 8, 16	√	√	√	√	√	√	√	√	R: √ W: —
INTC2	EI level interrupt control register 263	EIC263	$008F_H$	16	$FFFF\ B20E_H$	0	1, 8, 16	√	√	√	√	√	√	√	√	R: √ W: —

Table A.1 List of Registers (116/124)

Module	Register	Symbol	Value after Reset	Number of Bits	Address	Peripheral IP group	Access Size	Reset Source*1							Access Authority*1	
								POCRES	CVMRES	EXTRES	DBRES	ECMRES	BISTRES	SWRES	SV	UM
INTC2	EI level interrupt control register 264	EIC264	$008F_H$	16	$FFFF\ B210_H$	0	1, 8, 16	√	√	√	√	√	√	√	√	R: √ W: —
INTC2	EI level interrupt control register 265	EIC265	$008F_H$	16	$FFFF\ B212_H$	0	1, 8, 16	√	√	√	√	√	√	√	√	R: √ W: —
INTC2	EI level interrupt control register 266	EIC266	$008F_H$	16	$FFFF\ B214_H$	0	1, 8, 16	√	√	√	√	√	√	√	√	R: √ W: —
INTC2	EI level interrupt control register 267	EIC267	$008F_H$	16	$FFFF\ B216_H$	0	1, 8, 16	√	√	√	√	√	√	√	√	R: √ W: —
INTC2	EI level interrupt control register 268	EIC268	$008F_H$	16	$FFFF\ B218_H$	0	1, 8, 16	√	√	√	√	√	√	√	√	R: √ W: —
INTC2	EI level interrupt control register 269	EIC269	$008F_H$	16	$FFFF\ B21A_H$	0	1, 8, 16	√	√	√	√	√	√	√	√	R: √ W: —
INTC2	EI level interrupt control register 270	EIC270	$008F_H$	16	$FFFF\ B21C_H$	0	1, 8, 16	√	√	√	√	√	√	√	√	R: √ W: —
INTC2	EI level interrupt control register 271	EIC271	$008F_H$	16	$FFFF\ B21E_H$	0	1, 8, 16	√	√	√	√	√	√	√	√	R: √ W: —
INTC2	EI level interrupt control register 272	EIC272	$008F_H$	16	$FFFF\ B220_H$	0	1, 8, 16	√	√	√	√	√	√	√	√	R: √ W: —
INTC2	EI level interrupt control register 273	EIC273	$008F_H$	16	$FFFF\ B222_H$	0	1, 8, 16	√	√	√	√	√	√	√	√	R: √ W: —
INTC2	EI level interrupt control register 274	EIC274	$008F_H$	16	$FFFF\ B224_H$	0	1, 8, 16	√	√	√	√	√	√	√	√	R: √ W: —
INTC2	EI level interrupt control register 275	EIC275	$008F_H$	16	$FFFF\ B226_H$	0	1, 8, 16	√	√	√	√	√	√	√	√	R: √ W: —
INTC2	EI level interrupt control register 276	EIC276	$008F_H$	16	$FFFF\ B228_H$	0	1, 8, 16	√	√	√	√	√	√	√	√	R: √ W: —
INTC2	EI level interrupt control register 277	EIC277	$008F_H$	16	$FFFF\ B22A_H$	0	1, 8, 16	√	√	√	√	√	√	√	√	R: √ W: —
INTC2	EI level interrupt control register 278	EIC278	$008F_H$	16	$FFFF\ B22C_H$	0	1, 8, 16	√	√	√	√	√	√	√	√	R: √ W: —
INTC2	EI level interrupt control register 279	EIC279	$008F_H$	16	$FFFF\ B22E_H$	0	1, 8, 16	√	√	√	√	√	√	√	√	R: √ W: —
INTC2	EI level interrupt control register 280	EIC280	$008F_H$	16	$FFFF\ B230_H$	0	1, 8, 16	√	√	√	√	√	√	√	√	R: √ W: —
INTC2	EI level interrupt control register 281	EIC281	$008F_H$	16	$FFFF\ B232_H$	0	1, 8, 16	√	√	√	√	√	√	√	√	R: √ W: —
INTC2	EI level interrupt control register 282	EIC282	$008F_H$	16	$FFFF\ B234_H$	0	1, 8, 16	√	√	√	√	√	√	√	√	R: √ W: —
INTC2	EI level interrupt control register 283	EIC283	$008F_H$	16	$FFFF\ B236_H$	0	1, 8, 16	√	√	√	√	√	√	√	√	R: √ W: —
INTC2	EI level interrupt control register 284	EIC284	$008F_H$	16	$FFFF\ B238_H$	0	1, 8, 16	√	√	√	√	√	√	√	√	R: √ W: —
INTC2	EI level interrupt control register 285	EIC285	$008F_H$	16	$FFFF\ B23A_H$	0	1, 8, 16	√	√	√	√	√	√	√	√	R: √ W: —
INTC2	EI level interrupt control register 286	EIC286	$008F_H$	16	$FFFF\ B23C_H$	0	1, 8, 16	√	√	√	√	√	√	√	√	R: √ W: —
INTC2	EI level interrupt control register 287	EIC287	$008F_H$	16	$FFFF\ B23E_H$	0	1, 8, 16	√	√	√	√	√	√	√	√	R: √ W: —
INTC2	EI level interrupt control register 288	EIC288	$008F_H$	16	$FFFF\ B240_H$	0	1, 8, 16	√	√	√	√	√	√	√	√	R: √ W: —
INTC2	EI level interrupt control register 289	EIC289	$008F_H$	16	$FFFF\ B242_H$	0	1, 8, 16	√	√	√	√	√	√	√	√	R: √ W: —
INTC2	EI level interrupt control register 290	EIC290	$008F_H$	16	$FFFF\ B244_H$	0	1, 8, 16	√	√	√	√	√	√	√	√	R: √ W: —
INTC2	EI level interrupt control register 291	EIC291	$008F_H$	16	$FFFF\ B246_H$	0	1, 8, 16	√	√	√	√	√	√	√	√	R: √ W: —
INTC2	EI level interrupt control register 294	EIC294	$008F_H$	16	$FFFF\ B24C_H$	0	1, 8, 16	√	√	√	√	√	√	√	√	R: √ W: —
INTC2	EI level interrupt control register 295	EIC295	$008F_H$	16	$FFFF\ B24E_H$	0	1, 8, 16	√	√	√	√	√	√	√	√	R: √ W: —
INTC2	EI level interrupt control register 296	EIC296	$008F_H$	16	$FFFF\ B250_H$	0	1, 8, 16	√	√	√	√	√	√	√	√	R: √ W: —
INTC2	EI level interrupt control register 297	EIC297	$008F_H$	16	$FFFF\ B252_H$	0	1, 8, 16	√	√	√	√	√	√	√	√	R: √ W: —
INTC2	EI level interrupt control register 298	EIC298	$008F_H$	16	$FFFF\ B254_H$	0	1, 8, 16	√	√	√	√	√	√	√	√	R: √ W: —
INTC2	EI level interrupt control register 379	EIC379	$008F_H$	16	$FFFF\ B2F6_H$	0	1, 8, 16	√	√	√	√	√	√	√	√	R: √ W: —
INTC2	EI level interrupt control register 383	EIC383	$808F_H$	16	$FFFF\ B2FE_H$	0	1, 8, 16	√	√	√	√	√	√	√	√	R: √ W: —

Table A.1 List of Registers (117/124)

Module	Register	Symbol	Value after Reset	Number of Bits	Address	Peripheral IP group	Access Size	Reset Source*1							Access Authority*1	
								POCRES	CVMRES	EXTRES	DBRES	ECMRES	BISTRES	SWRES	SV	UM
INTC2	EI level interrupt mask register 1	IMR1	FFFF $FFFF_H$	32	FFFF $B404_H$	0	1, 8, 16, 32	√	√	√	√	√	√	√	√	R: √ W: —
INTC2	EI level interrupt mask register 2	IMR2	FFFF $FFFF_H$	32	FFFF $B408_H$	0	1, 8, 16, 32	√	√	√	√	√	√	√	√	R: √ W: —
INTC2	EI level interrupt mask register 3	IMR3	FFFF $FFFF_H$	32	FFFF $B40C_H$	0	1, 8, 16, 32	√	√	√	√	√	√	√	√	R: √ W: —
INTC2	EI level interrupt mask register 4	IMR4	FFFF $FFFF_H$	32	FFFF $B410_H$	0	1, 8, 16, 32	√	√	√	√	√	√	√	√	R: √ W: —
INTC2	EI level interrupt mask register 5	IMR5	FFFF $FFFF_H$	32	FFFF $B414_H$	0	1, 8, 16, 32	√	√	√	√	√	√	√	√	R: √ W: —
INTC2	EI level interrupt mask register 6	IMR6	FFFF $FFFF_H$	32	FFFF $B418_H$	0	1, 8, 16, 32	√	√	√	√	√	√	√	√	R: √ W: —
INTC2	EI level interrupt mask register 7	IMR7	FFFF $FFFF_H$	32	FFFF $B41C_H$	0	1, 8, 16, 32	√	√	√	√	√	√	√	√	R: √ W: —
INTC2	EI level interrupt mask register 8	IMR8	FFFF $FFFF_H$	32	FFFF $B420_H$	0	1, 8, 16, 32	√	√	√	√	√	√	√	√	R: √ W: —
INTC2	EI level interrupt mask register 9	IMR9	FFFF $FFFF_H$	32	FFFF $B424_H$	0	1, 8, 16, 32	√	√	√	√	√	√	√	√	R: √ W: —
INTC2	EI level interrupt mask register 11	IMR11	FFFF $FFFF_H$	32	FFFF $B42C_H$	0	1, 8, 16, 32	√	√	√	√	√	√	√	√	R: √ W: —
INTC2	EI level interrupt bind register 32	EIBD32	0000 0001_H	32	FFFF $B880_H$	0	32	√	√	√	√	√	√	√	√	R: √ W: —
INTC2	EI level interrupt bind register 33	EIBD33	0000 0001_H	32	FFFF $B884_H$	0	32	√	√	√	√	√	√	√	√	R: √ W: —
INTC2	EI level interrupt bind register 34	EIBD34	0000 0001_H	32	FFFF $B888_H$	0	32	√	√	√	√	√	√	√	√	R: √ W: —
INTC2	EI level interrupt bind register 35	EIBD35	0000 0001_H	32	FFFF $B88C_H$	0	32	√	√	√	√	√	√	√	√	R: √ W: —
INTC2	EI level interrupt bind register 36	EIBD36	0000 0001_H	32	FFFF $B890_H$	0	32	√	√	√	√	√	√	√	√	R: √ W: —
INTC2	EI level interrupt bind register 40	EIBD40	0000 0001_H	32	FFFF $B8A0_H$	0	32	√	√	√	√	√	√	√	√	R: √ W: —
INTC2	EI level interrupt bind register 41	EIBD41	0000 0001_H	32	FFFF $B8A4_H$	0	32	√	√	√	√	√	√	√	√	R: √ W: —
INTC2	EI level interrupt bind register 42	EIBD42	0000 0001_H	32	FFFF $B8A8_H$	0	32	√	√	√	√	√	√	√	√	R: √ W: —
INTC2	EI level interrupt bind register 43	EIBD43	0000 0001_H	32	FFFF $B8AC_H$	0	32	√	√	√	√	√	√	√	√	R: √ W: —
INTC2	EI level interrupt bind register 44	EIBD44	0000 0001_H	32	FFFF $B8B0_H$	0	32	√	√	√	√	√	√	√	√	R: √ W: —
INTC2	EI level interrupt bind register 45	EIBD45	0000 0001_H	32	FFFF $B8B4_H$	0	32	√	√	√	√	√	√	√	√	R: √ W: —
INTC2	EI level interrupt bind register 46	EIBD46	0000 0001_H	32	FFFF $B8B8_H$	0	32	√	√	√	√	√	√	√	√	R: √ W: —
INTC2	EI level interrupt bind register 47	EIBD47	0000 0001_H	32	FFFF $B8BC_H$	0	32	√	√	√	√	√	√	√	√	R: √ W: —
INTC2	EI level interrupt bind register 48	EIBD48	0000 0001_H	32	FFFF $B8C0_H$	0	32	√	√	√	√	√	√	√	√	R: √ W: —
INTC2	EI level interrupt bind register 49	EIBD49	0000 0001_H	32	FFFF $B8C4_H$	0	32	√	√	√	√	√	√	√	√	R: √ W: —
INTC2	EI level interrupt bind register 50	EIBD50	0000 0001_H	32	FFFF $B8C8_H$	0	32	√	√	√	√	√	√	√	√	R: √ W: —
INTC2	EI level interrupt bind register 51	EIBD51	0000 0001_H	32	FFFF $B8CC_H$	0	32	√	√	√	√	√	√	√	√	R: √ W: —
INTC2	EI level interrupt bind register 52	EIBD52	0000 0001_H	32	FFFF $B8D0_H$	0	32	√	√	√	√	√	√	√	√	R: √ W: —
INTC2	EI level interrupt bind register 53	EIBD53	0000 0001_H	32	FFFF $B8D4_H$	0	32	√	√	√	√	√	√	√	√	R: √ W: —
INTC2	EI level interrupt bind register 54	EIBD54	0000 0001_H	32	FFFF $B8D8_H$	0	32	√	√	√	√	√	√	√	√	R: √ W: —
INTC2	EI level interrupt bind register 55	EIBD55	0000 0001_H	32	FFFF $B8DC_H$	0	32	√	√	√	√	√	√	√	√	R: √ W: —
INTC2	EI level interrupt bind register 56	EIBD56	0000 0001_H	32	FFFF $B8E0_H$	0	32	√	√	√	√	√	√	√	√	R: √ W: —
INTC2	EI level interrupt bind register 57	EIBD57	0000 0001_H	32	FFFF $B8E4_H$	0	32	√	√	√	√	√	√	√	√	R: √ W: —
INTC2	EI level interrupt bind register 58	EIBD58	0000 0001_H	32	FFFF $B8E8_H$	0	32	√	√	√	√	√	√	√	√	R: √ W: —
INTC2	EI level interrupt bind register 59	EIBD59	0000 0001_H	32	FFFF $B8EC_H$	0	32	√	√	√	√	√	√	√	√	R: √ W: —

Table A.1 List of Registers (118/124)

Module	Register	Symbol	Value after Reset	Number of Bits	Address	Peripheral IP group	Access Size	Reset Source*1							Access Authority*1	
								POCRES	CVMRES	EXTRES	DBRES	ECMRES	BISTRES	SWRES	SV	UM
INTC2	EI level interrupt bind register 60	EIBD60	$0000\ 0001_H$	32	$FFFF\ B8F0_H$	0	32	√	√	√	√	√	√	√	√	R: √ W: —
INTC2	EI level interrupt bind register 61	EIBD61	$0000\ 0001_H$	32	$FFFF\ B8F4_H$	0	32	√	√	√	√	√	√	√	√	R: √ W: —
INTC2	EI level interrupt bind register 62	EIBD62	$0000\ 0001_H$	32	$FFFF\ B8F8_H$	0	32	√	√	√	√	√	√	√	√	R: √ W: —
INTC2	EI level interrupt bind register 63	EIBD63	$0000\ 0001_H$	32	$FFFF\ B8FC_H$	0	32	√	√	√	√	√	√	√	√	R: √ W: —
INTC2	EI level interrupt bind register 64	EIBD64	$0000\ 0001_H$	32	$FFFF\ B900_H$	0	32	√	√	√	√	√	√	√	√	R: √ W: —
INTC2	EI level interrupt bind register 65	EIBD65	$0000\ 0001_H$	32	$FFFF\ B904_H$	0	32	√	√	√	√	√	√	√	√	R: √ W: —
INTC2	EI level interrupt bind register 66	EIBD66	$0000\ 0001_H$	32	$FFFF\ B908_H$	0	32	√	√	√	√	√	√	√	√	R: √ W: —
INTC2	EI level interrupt bind register 67	EIBD67	$0000\ 0001_H$	32	$FFFF\ B90C_H$	0	32	√	√	√	√	√	√	√	√	R: √ W: —
INTC2	EI level interrupt bind register 68	EIBD68	$0000\ 0001_H$	32	$FFFF\ B910_H$	0	32	√	√	√	√	√	√	√	√	R: √ W: —
INTC2	EI level interrupt bind register 69	EIBD69	$0000\ 0001_H$	32	$FFFF\ B914_H$	0	32	√	√	√	√	√	√	√	√	R: √ W: —
INTC2	EI level interrupt bind register 70	EIBD70	$0000\ 0001_H$	32	$FFFF\ B918_H$	0	32	√	√	√	√	√	√	√	√	R: √ W: —
INTC2	EI level interrupt bind register 71	EIBD71	$0000\ 0001_H$	32	$FFFF\ B91C_H$	0	32	√	√	√	√	√	√	√	√	R: √ W: —
INTC2	EI level interrupt bind register 72	EIBD72	$0000\ 0001_H$	32	$FFFF\ B920_H$	0	32	√	√	√	√	√	√	√	√	R: √ W: —
INTC2	EI level interrupt bind register 73	EIBD73	$0000\ 0001_H$	32	$FFFF\ B924_H$	0	32	√	√	√	√	√	√	√	√	R: √ W: —
INTC2	EI level interrupt bind register 74	EIBD74	$0000\ 0001_H$	32	$FFFF\ B928_H$	0	32	√	√	√	√	√	√	√	√	R: √ W: —
INTC2	EI level interrupt bind register 75	EIBD75	$0000\ 0001_H$	32	$FFFF\ B92C_H$	0	32	√	√	√	√	√	√	√	√	R: √ W: —
INTC2	EI level interrupt bind register 76	EIBD76	$0000\ 0001_H$	32	$FFFF\ B930_H$	0	32	√	√	√	√	√	√	√	√	R: √ W: —
INTC2	EI level interrupt bind register 77	EIBD77	$0000\ 0001_H$	32	$FFFF\ B934_H$	0	32	√	√	√	√	√	√	√	√	R: √ W: —
INTC2	EI level interrupt bind register 78	EIBD78	$0000\ 0001_H$	32	$FFFF\ B938_H$	0	32	√	√	√	√	√	√	√	√	R: √ W: —
INTC2	EI level interrupt bind register 79	EIBD79	$0000\ 0001_H$	32	$FFFF\ B93C_H$	0	32	√	√	√	√	√	√	√	√	R: √ W: —
INTC2	EI level interrupt bind register 80	EIBD80	$0000\ 0001_H$	32	$FFFF\ B940_H$	0	32	√	√	√	√	√	√	√	√	R: √ W: —
INTC2	EI level interrupt bind register 81	EIBD81	$0000\ 0001_H$	32	$FFFF\ B944_H$	0	32	√	√	√	√	√	√	√	√	R: √ W: —
INTC2	EI level interrupt bind register 82	EIBD82	$0000\ 0001_H$	32	$FFFF\ B948_H$	0	32	√	√	√	√	√	√	√	√	R: √ W: —
INTC2	EI level interrupt bind register 83	EIBD83	$0000\ 0001_H$	32	$FFFF\ B94C_H$	0	32	√	√	√	√	√	√	√	√	R: √ W: —
INTC2	EI level interrupt bind register 84	EIBD84	$0000\ 0001_H$	32	$FFFF\ B950_H$	0	32	√	√	√	√	√	√	√	√	R: √ W: —
INTC2	EI level interrupt bind register 85	EIBD85	$0000\ 0001_H$	32	$FFFF\ B954_H$	0	32	√	√	√	√	√	√	√	√	R: √ W: —
INTC2	EI level interrupt bind register 86	EIBD86	$0000\ 0001_H$	32	$FFFF\ B958_H$	0	32	√	√	√	√	√	√	√	√	R: √ W: —
INTC2	EI level interrupt bind register 87	EIBD87	$0000\ 0001_H$	32	$FFFF\ B95C_H$	0	32	√	√	√	√	√	√	√	√	R: √ W: —
INTC2	EI level interrupt bind register 88	EIBD88	$0000\ 0001_H$	32	$FFFF\ B960_H$	0	32	√	√	√	√	√	√	√	√	R: √ W: —
INTC2	EI level interrupt bind register 89	EIBD89	$0000\ 0001_H$	32	$FFFF\ B964_H$	0	32	√	√	√	√	√	√	√	√	R: √ W: —
INTC2	EI level interrupt bind register 90	EIBD90	$0000\ 0001_H$	32	$FFFF\ B968_H$	0	32	√	√	√	√	√	√	√	√	R: √ W: —
INTC2	EI level interrupt bind register 91	EIBD91	$0000\ 0001_H$	32	$FFFF\ B96C_H$	0	32	√	√	√	√	√	√	√	√	R: √ W: —
INTC2	EI level interrupt bind register 92	EIBD92	$0000\ 0001_H$	32	$FFFF\ B970_H$	0	32	√	√	√	√	√	√	√	√	R: √ W: —
INTC2	EI level interrupt bind register 93	EIBD93	$0000\ 0001_H$	32	$FFFF\ B974_H$	0	32	√	√	√	√	√	√	√	√	R: √ W: —
INTC2	EI level interrupt bind register 94	EIBD94	$0000\ 0001_H$	32	$FFFF\ B978_H$	0	32	√	√	√	√	√	√	√	√	R: √ W: —

Table A.1 List of Registers (119/124)

Module	Register	Symbol	Value after Reset	Number of Bits	Address	Peripheral IP group	Access Size	Reset Source*1							Access Authority*1	
								POCRES	CVMRES	EXTRES	DBRES	ECMRES	BISTRES	SWRES	SV	UM
INTC2	EI level interrupt bind register 95	EIBD95	$0000\ 0001_H$	32	$FFFF\ B97C_H$	0	32	√	√	√	√	√	√	√	√	R: √ W: —
INTC2	EI level interrupt bind register 96	EIBD96	$0000\ 0001_H$	32	$FFFF\ B980_H$	0	32	√	√	√	√	√	√	√	√	R: √ W: —
INTC2	EI level interrupt bind register 97	EIBD97	$0000\ 0001_H$	32	$FFFF\ B984_H$	0	32	√	√	√	√	√	√	√	√	R: √ W: —
INTC2	EI level interrupt bind register 98	EIBD98	$0000\ 0001_H$	32	$FFFF\ B988_H$	0	32	√	√	√	√	√	√	√	√	R: √ W: —
INTC2	EI level interrupt bind register 99	EIBD99	$0000\ 0001_H$	32	$FFFF\ B98C_H$	0	32	√	√	√	√	√	√	√	√	R: √ W: —
INTC2	EI level interrupt bind register 100	EIBD100	$0000\ 0001_H$	32	$FFFF\ B990_H$	0	32	√	√	√	√	√	√	√	√	R: √ W: —
INTC2	EI level interrupt bind register 101	EIBD101	$0000\ 0001_H$	32	$FFFF\ B994_H$	0	32	√	√	√	√	√	√	√	√	R: √ W: —
INTC2	EI level interrupt bind register 102	EIBD102	$0000\ 0001_H$	32	$FFFF\ B998_H$	0	32	√	√	√	√	√	√	√	√	R: √ W: —
INTC2	EI level interrupt bind register 103	EIBD103	$0000\ 0001_H$	32	$FFFF\ B99C_H$	0	32	√	√	√	√	√	√	√	√	R: √ W: —
INTC2	EI level interrupt bind register 104	EIBD104	$0000\ 0001_H$	32	$FFFF\ B9A0_H$	0	32	√	√	√	√	√	√	√	√	R: √ W: —
INTC2	EI level interrupt bind register 105	EIBD105	$0000\ 0001_H$	32	$FFFF\ B9A4_H$	0	32	√	√	√	√	√	√	√	√	R: √ W: —
INTC2	EI level interrupt bind register 106	EIBD106	$0000\ 0001_H$	32	$FFFF\ B9A8_H$	0	32	√	√	√	√	√	√	√	√	R: √ W: —
INTC2	EI level interrupt bind register 107	EIBD107	$0000\ 0001_H$	32	$FFFF\ B9AC_H$	0	32	√	√	√	√	√	√	√	√	R: √ W: —
INTC2	EI level interrupt bind register 108	EIBD108	$0000\ 0001_H$	32	$FFFF\ B9B0_H$	0	32	√	√	√	√	√	√	√	√	R: √ W: —
INTC2	EI level interrupt bind register 109	EIBD109	$0000\ 0001_H$	32	$FFFF\ B9B4_H$	0	32	√	√	√	√	√	√	√	√	R: √ W: —
INTC2	EI level interrupt bind register 110	EIBD110	$0000\ 0001_H$	32	$FFFF\ B9B8_H$	0	32	√	√	√	√	√	√	√	√	R: √ W: —
INTC2	EI level interrupt bind register 111	EIBD111	$0000\ 0001_H$	32	$FFFF\ B9BC_H$	0	32	√	√	√	√	√	√	√	√	R: √ W: —
INTC2	EI level interrupt bind register 112	EIBD112	$0000\ 0001_H$	32	$FFFF\ B9C0_H$	0	32	√	√	√	√	√	√	√	√	R: √ W: —
INTC2	EI level interrupt bind register 113	EIBD113	$0000\ 0001_H$	32	$FFFF\ B9C4_H$	0	32	√	√	√	√	√	√	√	√	R: √ W: —
INTC2	EI level interrupt bind register 114	EIBD114	$0000\ 0001_H$	32	$FFFF\ B9C8_H$	0	32	√	√	√	√	√	√	√	√	R: √ W: —
INTC2	EI level interrupt bind register 115	EIBD115	$0000\ 0001_H$	32	$FFFF\ B9CC_H$	0	32	√	√	√	√	√	√	√	√	R: √ W: —
INTC2	EI level interrupt bind register 116	EIBD116	$0000\ 0001_H$	32	$FFFF\ B9D0_H$	0	32	√	√	√	√	√	√	√	√	R: √ W: —
INTC2	EI level interrupt bind register 117	EIBD117	$0000\ 0001_H$	32	$FFFF\ B9D4_H$	0	32	√	√	√	√	√	√	√	√	R: √ W: —
INTC2	EI level interrupt bind register 118	EIBD118	$0000\ 0001_H$	32	$FFFF\ B9D8_H$	0	32	√	√	√	√	√	√	√	√	R: √ W: —
INTC2	EI level interrupt bind register 119	EIBD119	$0000\ 0001_H$	32	$FFFF\ B9DC_H$	0	32	√	√	√	√	√	√	√	√	R: √ W: —
INTC2	EI level interrupt bind register 120	EIBD120	$0000\ 0001_H$	32	$FFFF\ B9E0_H$	0	32	√	√	√	√	√	√	√	√	R: √ W: —
INTC2	EI level interrupt bind register 121	EIBD121	$0000\ 0001_H$	32	$FFFF\ B9E4_H$	0	32	√	√	√	√	√	√	√	√	R: √ W: —
INTC2	EI level interrupt bind register 128	EIBD128	$0000\ 0001_H$	32	$FFFF\ BA00_H$	0	32	√	√	√	√	√	√	√	√	R: √ W: —
INTC2	EI level interrupt bind register 129	EIBD129	$0000\ 0001_H$	32	$FFFF\ BA04_H$	0	32	√	√	√	√	√	√	√	√	R: √ W: —
INTC2	EI level interrupt bind register 130	EIBD130	$0000\ 0001_H$	32	$FFFF\ BA08_H$	0	32	√	√	√	√	√	√	√	√	R: √ W: —
INTC2	EI level interrupt bind register 131	EIBD131	$0000\ 0001_H$	32	$FFFF\ BA0C_H$	0	32	√	√	√	√	√	√	√	√	R: √ W: —
INTC2	EI level interrupt bind register 132	EIBD132	$0000\ 0001_H$	32	$FFFF\ BA10_H$	0	32	√	√	√	√	√	√	√	√	R: √ W: —
INTC2	EI level interrupt bind register 133	EIBD133	$0000\ 0001_H$	32	$FFFF\ BA14_H$	0	32	√	√	√	√	√	√	√	√	R: √ W: —
INTC2	EI level interrupt bind register 134	EIBD134	$0000\ 0001_H$	32	$FFFF\ BA18_H$	0	32	√	√	√	√	√	√	√	√	R: √ W: —
INTC2	EI level interrupt bind register 135	EIBD135	$0000\ 0001_H$	32	$FFFF\ BA1C_H$	0	32	√	√	√	√	√	√	√	√	R: √ W: —

Table A.1 List of Registers (120/124)

Module	Register	Symbol	Value after Reset	Number of Bits	Address	Peripheral IP group	Access Size	Reset Source*1							Access Authority*1	
								POCRES	CVMRES	EXTRES	DBRES	ECMRES	BISTRES	SWRES	SV	UM
INTC2	EI level interrupt bind register 136	EIBD136	$0000\ 0001_H$	32	$FFFF\ BA20_H$	0	32	√	√	√	√	√	√	√	√	R: √ W: —
INTC2	EI level interrupt bind register 137	EIBD137	$0000\ 0001_H$	32	$FFFF\ BA24_H$	0	32	√	√	√	√	√	√	√	√	R: √ W: —
INTC2	EI level interrupt bind register 138	EIBD138	$0000\ 0001_H$	32	$FFFF\ BA28_H$	0	32	√	√	√	√	√	√	√	√	R: √ W: —
INTC2	EI level interrupt bind register 139	EIBD139	$0000\ 0001_H$	32	$FFFF\ BA2C_H$	0	32	√	√	√	√	√	√	√	√	R: √ W: —
INTC2	EI level interrupt bind register 140	EIBD140	$0000\ 0001_H$	32	$FFFF\ BA30_H$	0	32	√	√	√	√	√	√	√	√	R: √ W: —
INTC2	EI level interrupt bind register 141	EIBD141	$0000\ 0001_H$	32	$FFFF\ BA34_H$	0	32	√	√	√	√	√	√	√	√	R: √ W: —
INTC2	EI level interrupt bind register 142	EIBD142	$0000\ 0001_H$	32	$FFFF\ BA38_H$	0	32	√	√	√	√	√	√	√	√	R: √ W: —
INTC2	EI level interrupt bind register 143	EIBD143	$0000\ 0001_H$	32	$FFFF\ BA3C_H$	0	32	√	√	√	√	√	√	√	√	R: √ W: —
INTC2	EI level interrupt bind register 144	EIBD144	$0000\ 0001_H$	32	$FFFF\ BA40_H$	0	32	√	√	√	√	√	√	√	√	R: √ W: —
INTC2	EI level interrupt bind register 145	EIBD145	$0000\ 0001_H$	32	$FFFF\ BA44_H$	0	32	√	√	√	√	√	√	√	√	R: √ W: —
INTC2	EI level interrupt bind register 146	EIBD146	$0000\ 0001_H$	32	$FFFF\ BA48_H$	0	32	√	√	√	√	√	√	√	√	R: √ W: —
INTC2	EI level interrupt bind register 147	EIBD147	$0000\ 0001_H$	32	$FFFF\ BA4C_H$	0	32	√	√	√	√	√	√	√	√	R: √ W: —
INTC2	EI level interrupt bind register 148	EIBD148	$0000\ 0001_H$	32	$FFFF\ BA50_H$	0	32	√	√	√	√	√	√	√	√	R: √ W: —
INTC2	EI level interrupt bind register 149	EIBD149	$0000\ 0001_H$	32	$FFFF\ BA54_H$	0	32	√	√	√	√	√	√	√	√	R: √ W: —
INTC2	EI level interrupt bind register 150	EIBD150	$0000\ 0001_H$	32	$FFFF\ BA58_H$	0	32	√	√	√	√	√	√	√	√	R: √ W: —
INTC2	EI level interrupt bind register 151	EIBD151	$0000\ 0001_H$	32	$FFFF\ BA5C_H$	0	32	√	√	√	√	√	√	√	√	R: √ W: —
INTC2	EI level interrupt bind register 152	EIBD152	$0000\ 0001_H$	32	$FFFF\ BA60_H$	0	32	√	√	√	√	√	√	√	√	R: √ W: —
INTC2	EI level interrupt bind register 153	EIBD153	$0000\ 0001_H$	32	$FFFF\ BA64_H$	0	32	√	√	√	√	√	√	√	√	R: √ W: —
INTC2	EI level interrupt bind register 154	EIBD154	$0000\ 0001_H$	32	$FFFF\ BA68_H$	0	32	√	√	√	√	√	√	√	√	R: √ W: —
INTC2	EI level interrupt bind register 155	EIBD155	$0000\ 0001_H$	32	$FFFF\ BA6C_H$	0	32	√	√	√	√	√	√	√	√	R: √ W: —
INTC2	EI level interrupt bind register 156	EIBD156	$0000\ 0001_H$	32	$FFFF\ BA70_H$	0	32	√	√	√	√	√	√	√	√	R: √ W: —
INTC2	EI level interrupt bind register 158	EIBD158	$0000\ 0001_H$	32	$FFFF\ BA78_H$	0	32	√	√	√	√	√	√	√	√	R: √ W: —
INTC2	EI level interrupt bind register 159	EIBD159	$0000\ 0001_H$	32	$FFFF\ BA7C_H$	0	32	√	√	√	√	√	√	√	√	R: √ W: —
INTC2	EI level interrupt bind register 160	EIBD160	$0000\ 0001_H$	32	$FFFF\ BA80_H$	0	32	√	√	√	√	√	√	√	√	R: √ W: —
INTC2	EI level interrupt bind register 161	EIBD161	$0000\ 0001_H$	32	$FFFF\ BA84_H$	0	32	√	√	√	√	√	√	√	√	R: √ W: —
INTC2	EI level interrupt bind register 162	EIBD162	$0000\ 0001_H$	32	$FFFF\ BA88_H$	0	32	√	√	√	√	√	√	√	√	R: √ W: —
INTC2	EI level interrupt bind register 163	EIBD163	$0000\ 0001_H$	32	$FFFF\ BA8C_H$	0	32	√	√	√	√	√	√	√	√	R: √ W: —
INTC2	EI level interrupt bind register 164	EIBD164	$0000\ 0001_H$	32	$FFFF\ BA90_H$	0	32	√	√	√	√	√	√	√	√	R: √ W: —
INTC2	EI level interrupt bind register 165	EIBD165	$0000\ 0001_H$	32	$FFFF\ BA94_H$	0	32	√	√	√	√	√	√	√	√	R: √ W: —
INTC2	EI level interrupt bind register 166	EIBD166	$0000\ 0001_H$	32	$FFFF\ BA98_H$	0	32	√	√	√	√	√	√	√	√	R: √ W: —
INTC2	EI level interrupt bind register 167	EIBD167	$0000\ 0001_H$	32	$FFFF\ BA9C_H$	0	32	√	√	√	√	√	√	√	√	R: √ W: —
INTC2	EI level interrupt bind register 168	EIBD168	$0000\ 0001_H$	32	$FFFF\ BAA0_H$	0	32	√	√	√	√	√	√	√	√	R: √ W: —
INTC2	EI level interrupt bind register 169	EIBD169	$0000\ 0001_H$	32	$FFFF\ BAA4_H$	0	32	√	√	√	√	√	√	√	√	R: √ W: —
INTC2	EI level interrupt bind register 170	EIBD170	$0000\ 0001_H$	32	$FFFF\ BAA8_H$	0	32	√	√	√	√	√	√	√	√	R: √ W: —
INTC2	EI level interrupt bind register 171	EIBD171	$0000\ 0001_H$	32	$FFFF\ BAAC_H$	0	32	√	√	√	√	√	√	√	√	R: √ W: —

Table A.1 List of Registers (121/124)

Module	Register	Symbol	Value after Reset	Number of Bits	Address	Peripheral IP group	Access Size	Reset Source*1							Access Authority*1	
								POCRES	CVMRES	EXTRES	DBRES	ECMRES	BISTRES	SWRES	SV	UM
INTC2	EI level interrupt bind register 172	EIBD172	$0000\ 0001_H$	32	$FFFF\ BAB0_H$	0	32	√	√	√	√	√	√	√	√	R: √ W: —
INTC2	EI level interrupt bind register 173	EIBD173	$0000\ 0001_H$	32	$FFFF\ BAB4_H$	0	32	√	√	√	√	√	√	√	√	R: √ W: —
INTC2	EI level interrupt bind register 174	EIBD174	$0000\ 0001_H$	32	$FFFF\ BAB8_H$	0	32	√	√	√	√	√	√	√	√	R: √ W: —
INTC2	EI level interrupt bind register 175	EIBD175	$0000\ 0001_H$	32	$FFFF\ BABC_H$	0	32	√	√	√	√	√	√	√	√	R: √ W: —
INTC2	EI level interrupt bind register 176	EIBD176	$0000\ 0001_H$	32	$FFFF\ BAC0_H$	0	32	√	√	√	√	√	√	√	√	R: √ W: —
INTC2	EI level interrupt bind register 177	EIBD177	$0000\ 0001_H$	32	$FFFF\ BAC4_H$	0	32	√	√	√	√	√	√	√	√	R: √ W: —
INTC2	EI level interrupt bind register 178	EIBD178	$0000\ 0001_H$	32	$FFFF\ BAC8_H$	0	32	√	√	√	√	√	√	√	√	R: √ W: —
INTC2	EI level interrupt bind register 179	EIBD179	$0000\ 0001_H$	32	$FFFF\ BACC_H$	0	32	√	√	√	√	√	√	√	√	R: √ W: —
INTC2	EI level interrupt bind register 180	EIBD180	$0000\ 0001_H$	32	$FFFF\ BAD0_H$	0	32	√	√	√	√	√	√	√	√	R: √ W: —
INTC2	EI level interrupt bind register 181	EIBD181	$0000\ 0001_H$	32	$FFFF\ BAD4_H$	0	32	√	√	√	√	√	√	√	√	R: √ W: —
INTC2	EI level interrupt bind register 182	EIBD182	$0000\ 0001_H$	32	$FFFF\ BAD8_H$	0	32	√	√	√	√	√	√	√	√	R: √ W: —
INTC2	EI level interrupt bind register 183	EIBD183	$0000\ 0001_H$	32	$FFFF\ BADC_H$	0	32	√	√	√	√	√	√	√	√	R: √ W: —
INTC2	EI level interrupt bind register 184	EIBD184	$0000\ 0001_H$	32	$FFFF\ BAE0_H$	0	32	√	√	√	√	√	√	√	√	R: √ W: —
INTC2	EI level interrupt bind register 185	EIBD185	$0000\ 0001_H$	32	$FFFF\ BAE4_H$	0	32	√	√	√	√	√	√	√	√	R: √ W: —
INTC2	EI level interrupt bind register 186	EIBD186	$0000\ 0001_H$	32	$FFFF\ BAE8_H$	0	32	√	√	√	√	√	√	√	√	R: √ W: —
INTC2	EI level interrupt bind register 187	EIBD187	$0000\ 0001_H$	32	$FFFF\ BAEC_H$	0	32	√	√	√	√	√	√	√	√	R: √ W: —
INTC2	EI level interrupt bind register 188	EIBD188	$0000\ 0001_H$	32	$FFFF\ BAF0_H$	0	32	√	√	√	√	√	√	√	√	R: √ W: —
INTC2	EI level interrupt bind register 189	EIBD189	$0000\ 0001_H$	32	$FFFF\ BAF4_H$	0	32	√	√	√	√	√	√	√	√	R: √ W: —
INTC2	EI level interrupt bind register 190	EIBD190	$0000\ 0001_H$	32	$FFFF\ BAF8_H$	0	32	√	√	√	√	√	√	√	√	R: √ W: —
INTC2	EI level interrupt bind register 191	EIBD191	$0000\ 0001_H$	32	$FFFF\ BAFC_H$	0	32	√	√	√	√	√	√	√	√	R: √ W: —
INTC2	EI level interrupt bind register 192	EIBD192	$0000\ 0001_H$	32	$FFFF\ BB00_H$	0	32	√	√	√	√	√	√	√	√	R: √ W: —
INTC2	EI level interrupt bind register 193	EIBD193	$0000\ 0001_H$	32	$FFFF\ BB04_H$	0	32	√	√	√	√	√	√	√	√	R: √ W: —
INTC2	EI level interrupt bind register 194	EIBD194	$0000\ 0001_H$	32	$FFFF\ BB08_H$	0	32	√	√	√	√	√	√	√	√	R: √ W: —
INTC2	EI level interrupt bind register 195	EIBD195	$0000\ 0001_H$	32	$FFFF\ BB0C_H$	0	32	√	√	√	√	√	√	√	√	R: √ W: —
INTC2	EI level interrupt bind register 196	EIBD196	$0000\ 0001_H$	32	$FFFF\ BB10_H$	0	32	√	√	√	√	√	√	√	√	R: √ W: —
INTC2	EI level interrupt bind register 197	EIBD197	$0000\ 0001_H$	32	$FFFF\ BB14_H$	0	32	√	√	√	√	√	√	√	√	R: √ W: —
INTC2	EI level interrupt bind register 198	EIBD198	$0000\ 0001_H$	32	$FFFF\ BB18_H$	0	32	√	√	√	√	√	√	√	√	R: √ W: —
INTC2	EI level interrupt bind register 199	EIBD199	$0000\ 0001_H$	32	$FFFF\ BB1C_H$	0	32	√	√	√	√	√	√	√	√	R: √ W: —
INTC2	EI level interrupt bind register 200	EIBD200	$0000\ 0001_H$	32	$FFFF\ BB20_H$	0	32	√	√	√	√	√	√	√	√	R: √ W: —
INTC2	EI level interrupt bind register 201	EIBD201	$0000\ 0001_H$	32	$FFFF\ BB24_H$	0	32	√	√	√	√	√	√	√	√	R: √ W: —
INTC2	EI level interrupt bind register 202	EIBD202	$0000\ 0001_H$	32	$FFFF\ BB28_H$	0	32	√	√	√	√	√	√	√	√	R: √ W: —
INTC2	EI level interrupt bind register 203	EIBD203	$0000\ 0001_H$	32	$FFFF\ BB2C_H$	0	32	√	√	√	√	√	√	√	√	R: √ W: —
INTC2	EI level interrupt bind register 204	EIBD204	$0000\ 0001_H$	32	$FFFF\ BB30_H$	0	32	√	√	√	√	√	√	√	√	R: √ W: —
INTC2	EI level interrupt bind register 218	EIBD218	$0000\ 0001_H$	32	$FFFF\ BB68_H$	0	32	√	√	√	√	√	√	√	√	R: √ W: —
INTC2	EI level interrupt bind register 219	EIBD219	$0000\ 0001_H$	32	$FFFF\ BB6C_H$	0	32	√	√	√	√	√	√	√	√	R: √ W: —

Table A.1 List of Registers (122/124)

Module	Register	Symbol	Value after Reset	Number of Bits	Address	Peripheral IP group	Access Size	Reset Source*1							Access Authority*1	
								POCRES	CVMRES	EXTRES	DBRES	ECMRES	BISTRES	SWRES	SV	UM
INTC2	EI level interrupt bind register 220	EIBD220	$0000\ 0001_H$	32	$FFFF\ BB70_H$	0	32	√	√	√	√	√	√	√	√	R: √ W: —
INTC2	EI level interrupt bind register 221	EIBD221	$0000\ 0001_H$	32	$FFFF\ BB74_H$	0	32	√	√	√	√	√	√	√	√	R: √ W: —
INTC2	EI level interrupt bind register 226	EIBD226	$0000\ 0001_H$	32	$FFFF\ BB88_H$	0	32	√	√	√	√	√	√	√	√	R: √ W: —
INTC2	EI level interrupt bind register 227	EIBD227	$0000\ 0001_H$	32	$FFFF\ BB8C_H$	0	32	√	√	√	√	√	√	√	√	R: √ W: —
INTC2	EI level interrupt bind register 228	EIBD228	$0000\ 0001_H$	32	$FFFF\ BB90_H$	0	32	√	√	√	√	√	√	√	√	R: √ W: —
INTC2	EI level interrupt bind register 229	EIBD229	$0000\ 0001_H$	32	$FFFF\ BB94_H$	0	32	√	√	√	√	√	√	√	√	R: √ W: —
INTC2	EI level interrupt bind register 230	EIBD230	$0000\ 0001_H$	32	$FFFF\ BB98_H$	0	32	√	√	√	√	√	√	√	√	R: √ W: —
INTC2	EI level interrupt bind register 231	EIBD231	$0000\ 0001_H$	32	$FFFF\ BB9C_H$	0	32	√	√	√	√	√	√	√	√	R: √ W: —
INTC2	EI level interrupt bind register 232	EIBD232	$0000\ 0001_H$	32	$FFFF\ BBA0_H$	0	32	√	√	√	√	√	√	√	√	R: √ W: —
INTC2	EI level interrupt bind register 233	EIBD233	$0000\ 0001_H$	32	$FFFF\ BBA4_H$	0	32	√	√	√	√	√	√	√	√	R: √ W: —
INTC2	EI level interrupt bind register 234	EIBD234	$0000\ 0001_H$	32	$FFFF\ BBA8_H$	0	32	√	√	√	√	√	√	√	√	R: √ W: —
INTC2	EI level interrupt bind register 235	EIBD235	$0000\ 0001_H$	32	$FFFF\ BBAC_H$	0	32	√	√	√	√	√	√	√	√	R: √ W: —
INTC2	EI level interrupt bind register 236	EIBD236	$0000\ 0001_H$	32	$FFFF\ BBB0_H$	0	32	√	√	√	√	√	√	√	√	R: √ W: —
INTC2	EI level interrupt bind register 237	EIBD237	$0000\ 0001_H$	32	$FFFF\ BBB4_H$	0	32	√	√	√	√	√	√	√	√	R: √ W: —
INTC2	EI level interrupt bind register 238	EIBD238	$0000\ 0001_H$	32	$FFFF\ BBB8_H$	0	32	√	√	√	√	√	√	√	√	R: √ W: —
INTC2	EI level interrupt bind register 239	EIBD239	$0000\ 0001_H$	32	$FFFF\ BBBC_H$	0	32	√	√	√	√	√	√	√	√	R: √ W: —
INTC2	EI level interrupt bind register 240	EIBD240	$0000\ 0001_H$	32	$FFFF\ BBC0_H$	0	32	√	√	√	√	√	√	√	√	R: √ W: —
INTC2	EI level interrupt bind register 241	EIBD241	$0000\ 0001_H$	32	$FFFF\ BBC4_H$	0	32	√	√	√	√	√	√	√	√	R: √ W: —
INTC2	EI level interrupt bind register 242	EIBD242	$0000\ 0001_H$	32	$FFFF\ BBC8_H$	0	32	√	√	√	√	√	√	√	√	R: √ W: —
INTC2	EI level interrupt bind register 243	EIBD243	$0000\ 0001_H$	32	$FFFF\ BBCC_H$	0	32	√	√	√	√	√	√	√	√	R: √ W: —
INTC2	EI level interrupt bind register 244	EIBD244	$0000\ 0001_H$	32	$FFFF\ BBD0_H$	0	32	√	√	√	√	√	√	√	√	R: √ W: —
INTC2	EI level interrupt bind register 245	EIBD245	$0000\ 0001_H$	32	$FFFF\ BBD4_H$	0	32	√	√	√	√	√	√	√	√	R: √ W: —
INTC2	EI level interrupt bind register 246	EIBD246	$0000\ 0001_H$	32	$FFFF\ BBD8_H$	0	32	√	√	√	√	√	√	√	√	R: √ W: —
INTC2	EI level interrupt bind register 247	EIBD247	$0000\ 0001_H$	32	$FFFF\ BBDC_H$	0	32	√	√	√	√	√	√	√	√	R: √ W: —
INTC2	EI level interrupt bind register 248	EIBD248	$0000\ 0001_H$	32	$FFFF\ BBE0_H$	0	32	√	√	√	√	√	√	√	√	R: √ W: —
INTC2	EI level interrupt bind register 249	EIBD249	$0000\ 0001_H$	32	$FFFF\ BBE4_H$	0	32	√	√	√	√	√	√	√	√	R: √ W: —
INTC2	EI level interrupt bind register 250	EIBD250	$0000\ 0001_H$	32	$FFFF\ BBE8_H$	0	32	√	√	√	√	√	√	√	√	R: √ W: —
INTC2	EI level interrupt bind register 251	EIBD251	$0000\ 0001_H$	32	$FFFF\ BBEC_H$	0	32	√	√	√	√	√	√	√	√	R: √ W: —
INTC2	EI level interrupt bind register 252	EIBD252	$0000\ 0001_H$	32	$FFFF\ BBF0_H$	0	32	√	√	√	√	√	√	√	√	R: √ W: —
INTC2	EI level interrupt bind register 253	EIBD253	$0000\ 0001_H$	32	$FFFF\ BBF4_H$	0	32	√	√	√	√	√	√	√	√	R: √ W: —
INTC2	EI level interrupt bind register 254	EIBD254	$0000\ 0001_H$	32	$FFFF\ BBF8_H$	0	32	√	√	√	√	√	√	√	√	R: √ W: —
INTC2	EI level interrupt bind register 256	EIBD256	$0000\ 0001_H$	32	$FFFF\ BC00_H$	0	32	√	√	√	√	√	√	√	√	R: √ W: —
INTC2	EI level interrupt bind register 257	EIBD257	$0000\ 0001_H$	32	$FFFF\ BC04_H$	0	32	√	√	√	√	√	√	√	√	R: √ W: —
INTC2	EI level interrupt bind register 258	EIBD258	$0000\ 0001_H$	32	$FFFF\ BC08_H$	0	32	√	√	√	√	√	√	√	√	R: √ W: —
INTC2	EI level interrupt bind register 259	EIBD259	$0000\ 0001_H$	32	$FFFF\ BC0C_H$	0	32	√	√	√	√	√	√	√	√	R: √ W: —

Table A.1 List of Registers (123/124)

Module	Register	Symbol	Value after Reset	Number of Bits	Address	Peripheral IP group	Access Size	Reset Source*1							Access Authority*1	
								POCRES	CVMRES	EXTRES	DBRES	ECMRES	BISTRES	SWRES	SV	UM
INTC2	EI level interrupt bind register 260	EIBD260	$0000\ 0001_H$	32	$FFFF\ BC10_H$	0	32	√	√	√	√	√	√	√	√	R: √ W: —
INTC2	EI level interrupt bind register 261	EIBD261	$0000\ 0001_H$	32	$FFFF\ BC14_H$	0	32	√	√	√	√	√	√	√	√	R: √ W: —
INTC2	EI level interrupt bind register 262	EIBD262	$0000\ 0001_H$	32	$FFFF\ BC18_H$	0	32	√	√	√	√	√	√	√	√	R: √ W: —
INTC2	EI level interrupt bind register 263	EIBD263	$0000\ 0001_H$	32	$FFFF\ BC1C_H$	0	32	√	√	√	√	√	√	√	√	R: √ W: —
INTC2	EI level interrupt bind register 264	EIBD264	$0000\ 0001_H$	32	$FFFF\ BC20_H$	0	32	√	√	√	√	√	√	√	√	R: √ W: —
INTC2	EI level interrupt bind register 265	EIBD265	$0000\ 0001_H$	32	$FFFF\ BC24_H$	0	32	√	√	√	√	√	√	√	√	R: √ W: —
INTC2	EI level interrupt bind register 266	EIBD266	$0000\ 0001_H$	32	$FFFF\ BC28_H$	0	32	√	√	√	√	√	√	√	√	R: √ W: —
INTC2	EI level interrupt bind register 267	EIBD267	$0000\ 0001_H$	32	$FFFF\ BC2C_H$	0	32	√	√	√	√	√	√	√	√	R: √ W: —
INTC2	EI level interrupt bind register 268	EIBD268	$0000\ 0001_H$	32	$FFFF\ BC30_H$	0	32	√	√	√	√	√	√	√	√	R: √ W: —
INTC2	EI level interrupt bind register 269	EIBD269	$0000\ 0001_H$	32	$FFFF\ BC34_H$	0	32	√	√	√	√	√	√	√	√	R: √ W: —
INTC2	EI level interrupt bind register 270	EIBD270	$0000\ 0001_H$	32	$FFFF\ BC38_H$	0	32	√	√	√	√	√	√	√	√	R: √ W: —
INTC2	EI level interrupt bind register 271	EIBD271	$0000\ 0001_H$	32	$FFFF\ BC3C_H$	0	32	√	√	√	√	√	√	√	√	R: √ W: —
INTC2	EI level interrupt bind register 272	EIBD272	$0000\ 0001_H$	32	$FFFF\ BC40_H$	0	32	√	√	√	√	√	√	√	√	R: √ W: —
INTC2	EI level interrupt bind register 273	EIBD273	$0000\ 0001_H$	32	$FFFF\ BC44_H$	0	32	√	√	√	√	√	√	√	√	R: √ W: —
INTC2	EI level interrupt bind register 274	EIBD274	$0000\ 0001_H$	32	$FFFF\ BC48_H$	0	32	√	√	√	√	√	√	√	√	R: √ W: —
INTC2	EI level interrupt bind register 275	EIBD275	$0000\ 0001_H$	32	$FFFF\ BC4C_H$	0	32	√	√	√	√	√	√	√	√	R: √ W: —
INTC2	EI level interrupt bind register 276	EIBD276	$0000\ 0001_H$	32	$FFFF\ BC50_H$	0	32	√	√	√	√	√	√	√	√	R: √ W: —
INTC2	EI level interrupt bind register 277	EIBD277	$0000\ 0001_H$	32	$FFFF\ BC54_H$	0	32	√	√	√	√	√	√	√	√	R: √ W: —
INTC2	EI level interrupt bind register 278	EIBD278	$0000\ 0001_H$	32	$FFFF\ BC58_H$	0	32	√	√	√	√	√	√	√	√	R: √ W: —
INTC2	EI level interrupt bind register 279	EIBD279	$0000\ 0001_H$	32	$FFFF\ BC5C_H$	0	32	√	√	√	√	√	√	√	√	R: √ W: —
INTC2	EI level interrupt bind register 280	EIBD280	$0000\ 0001_H$	32	$FFFF\ BC60_H$	0	32	√	√	√	√	√	√	√	√	R: √ W: —
INTC2	EI level interrupt bind register 281	EIBD281	$0000\ 0001_H$	32	$FFFF\ BC64_H$	0	32	√	√	√	√	√	√	√	√	R: √ W: —
INTC2	EI level interrupt bind register 282	EIBD282	$0000\ 0001_H$	32	$FFFF\ BC68_H$	0	32	√	√	√	√	√	√	√	√	R: √ W: —
INTC2	EI level interrupt bind register 283	EIBD283	$0000\ 0001_H$	32	$FFFF\ BC6C_H$	0	32	√	√	√	√	√	√	√	√	R: √ W: —
INTC2	EI level interrupt bind register 284	EIBD284	$0000\ 0001_H$	32	$FFFF\ BC70_H$	0	32	√	√	√	√	√	√	√	√	R: √ W: —
INTC2	EI level interrupt bind register 285	EIBD285	$0000\ 0001_H$	32	$FFFF\ BC74_H$	0	32	√	√	√	√	√	√	√	√	R: √ W: —
INTC2	EI level interrupt bind register 286	EIBD286	$0000\ 0001_H$	32	$FFFF\ BC78_H$	0	32	√	√	√	√	√	√	√	√	R: √ W: —
INTC2	EI level interrupt bind register 287	EIBD287	$0000\ 0001_H$	32	$FFFF\ BC7C_H$	0	32	√	√	√	√	√	√	√	√	R: √ W: —
INTC2	EI level interrupt bind register 288	EIBD288	$0000\ 0001_H$	32	$FFFF\ BC80_H$	0	32	√	√	√	√	√	√	√	√	R: √ W: —
INTC2	EI level interrupt bind register 289	EIBD289	$0000\ 0001_H$	32	$FFFF\ BC84_H$	0	32	√	√	√	√	√	√	√	√	R: √ W: —
INTC2	EI level interrupt bind register 290	EIBD290	$0000\ 0001_H$	32	$FFFF\ BC88_H$	0	32	√	√	√	√	√	√	√	√	R: √ W: —
INTC2	EI level interrupt bind register 291	EIBD291	$0000\ 0001_H$	32	$FFFF\ BC8C_H$	0	32	√	√	√	√	√	√	√	√	R: √ W: —
INTC2	EI level interrupt bind register 294	EIBD294	$0000\ 0001_H$	32	$FFFF\ BC98_H$	0	32	√	√	√	√	√	√	√	√	R: √ W: —
INTC2	EI level interrupt bind register 295	EIBD295	$0000\ 0001_H$	32	$FFFF\ BC9C_H$	0	32	√	√	√	√	√	√	√	√	R: √ W: —
INTC2	EI level interrupt bind register 296	EIBD296	$0000\ 0001_H$	32	$FFFF\ BCA0_H$	0	32	√	√	√	√	√	√	√	√	R: √ W: —

Table A.1 List of Registers (124/124)

Module	Register	Symbol	Value after Reset	Number of Bits	Address	Peripheral IP group	Access Size	Reset Source*1							Access Authority*1	
								POCRES	CVMRES	EXTRES	DBRES	ECMRES	BISTRES	SWRES	SV	UM
INTC2	EI level interrupt bind register 297	EIBD297	$0000\ 0001_H$	32	$FFFF\ BCA4_H$	0	32	√	√	√	√	√	√	√	√	R: √ W: —
INTC2	EI level interrupt bind register 298	EIBD298	$0000\ 0001_H$	32	$FFFF\ BCA8_H$	0	32	√	√	√	√	√	√	√	√	R: √ W: —
INTC2	EI level interrupt bind register 379	EIBD379	$0000\ 0001_H$	32	$FFFF\ BDEC_H$	0	32	√	√	√	√	√	√	√	√	R: √ W: —
INTC2	EI level interrupt bind register 383	EIBD383	$0000\ 0001_H$	32	$FFFF\ BDFC_H$	0	32	√	√	√	√	√	√	√	√	R: √ W: —

Note 1. √: applicable, —: not applicable

Appendix B. Package Dimensions

JEITA Package Code	RENESAS Code	Previous Code	MASS[Typ.]
P-LFQFP144-20x20-0.50	PLQP0144KA-A	144P6Q-A / FP-144L / FP-144LV	1.2g

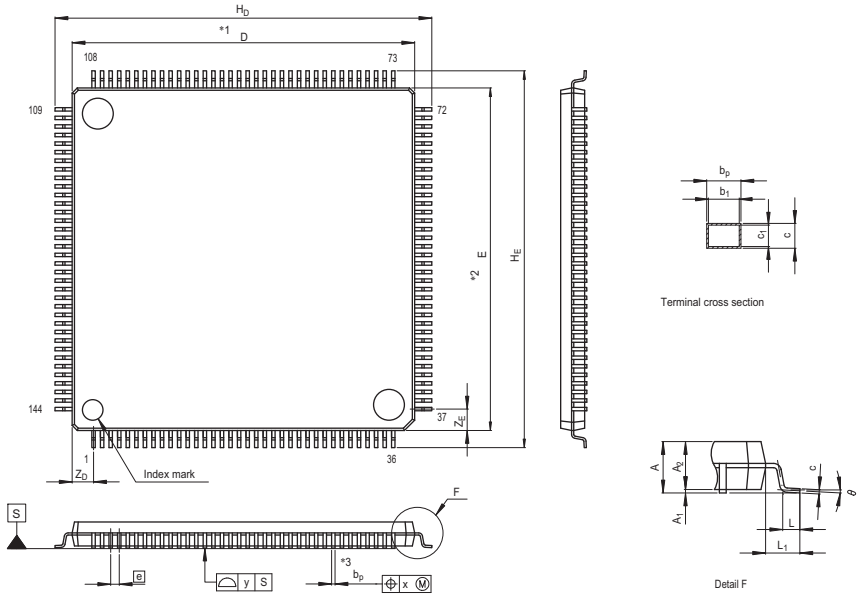

NOTE)
1. DIMENSIONS "*1" AND "*2" DO NOT INCLUDE MOLD FLASH.
2. DIMENSION "*3" DOES NOT INCLUDE TRIM OFFSET.

Reference Symbol	Dimension in Millimeters		
	Min	Nom	Max
D	19.9	20.0	20.1
E	19.9	20.0	20.1
A_2	—	1.4	—
H_D	21.8	22.0	22.2
H_E	21.8	22.0	22.2
A	—	—	1.7
A_1	0.05	0.1	0.15
b_p	0.17	0.22	0.27
b_1	—	0.20	—
c	0.09	0.145	0.20
c_1	—	0.125	—
θ	0°	—	8°
e	—	0.5	—
x	—	—	0.08
y	—	—	0.10
Z_D	—	1.25	—
Z_E	—	1.25	—
L	0.35	0.5	0.65
L_1	—	1.0	—

JEITA Package Code	RENESAS Code	Previous Code	MASS[Typ.]
P-LFQFP144-16x16-0.40	PLQP0144LB-A	——	0.9g

Unit: mm

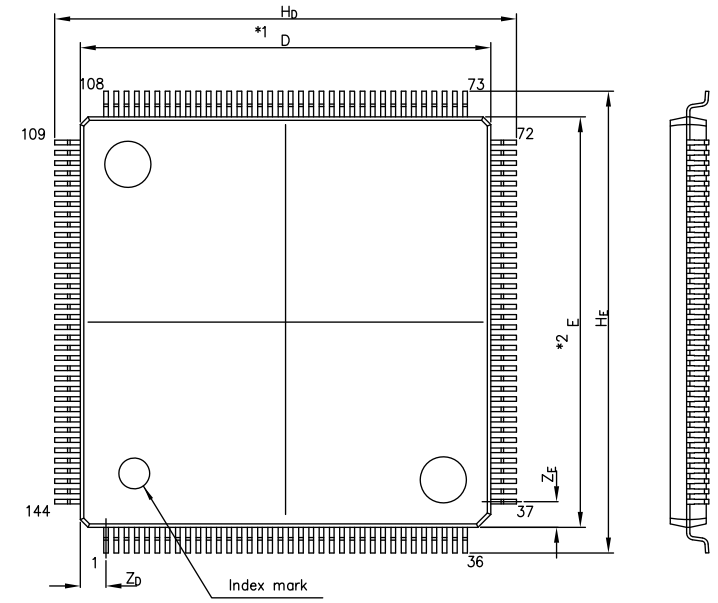

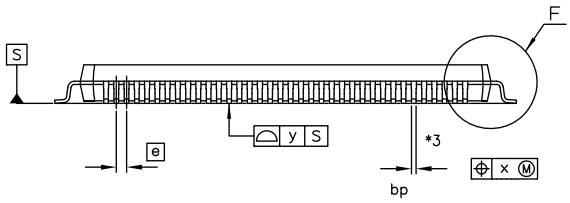

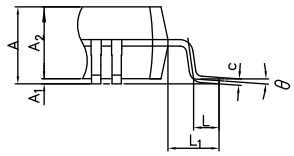

Detail F

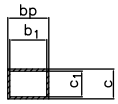

Terminal cross section

NOTE)
1. DIMENSIONS "*1" AND "*2" DO NOT INCLUDE MOLD FLASH.
2. DIMENSION "*3" DOES NOT INCLUDE TRIM OFFSET.

Reference Symbol	Dimension in Millimeters		
	Min	Nom	Max
D	15.9	16.0	16.1
E	15.9	16.0	16.1
A_2	——	1.4	——
H_D	17.8	18.0	18.2
H_E	17.8	18.0	18.2
A	——	——	1.7
A_1	0.05	0.10	0.15
bp	0.13	0.18	0.23
b_1	——	0.16	——
c	0.09	0.145	0.20
c_1	——	0.125	——
θ	0°	——	8°
e	——	0.4	——
x	——	——	0.07
y	——	——	0.08
Z_D	——	1.0	——
Z_E	——	1.0	——
L	0.35	0.5	0.65
L_1	——	1.0	——

JEITA Package Code	RENESAS Code	Previous Code	MASS[Typ.]
P-LFQFP100-14x14-0.50	PLQP0100KB-A	100P6Q-A / FP-100U / FP-100UV	0.6g

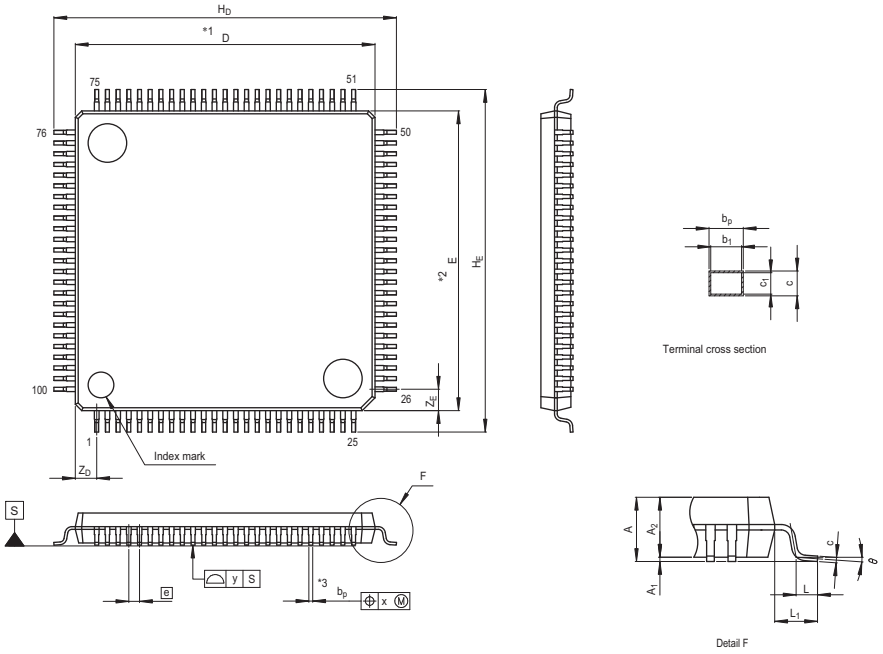

NOTE)
1. DIMENSIONS "*1" AND "*2" DO NOT INCLUDE MOLD FLASH.
2. DIMENSION "*3" DOES NOT INCLUDE TRIM OFFSET.

Reference Symbol	Dimension in Millimeters		
	Min	Nom	Max
D	13.9	14.0	14.1
E	13.9	14.0	14.1
A_2	—	1.4	—
H_D	15.8	16.0	16.2
H_E	15.8	16.0	16.2
A	—	—	1.7
A_1	0.05	0.1	0.15
b_p	0.15	0.20	0.25
b_1	—	0.18	—
c	0.09	0.145	0.20
c_1	—	0.125	—
θ	0°	—	8°
e	—	0.5	—
x	—	—	0.08
y	—	—	0.08
Z_D	—	1.0	—
Z_E	—	1.0	—
L	0.35	0.5	0.65
L_1	—	1.0	—

RH850/P1x User's Manual: Hardware

Publication Date: Rev.0.10 Jun, 2013
Rev.1.40 Mar 30, 2018

Published by: Renesas Electronics Corporation

SALES OFFICES Renesas Electronics Corporation http://www.renesas.com

Refer to "http://www.renesas.com/" for the latest and detailed information.

Renesas Electronics America Inc.
1001 Murphy Ranch Road, Milpitas, CA 95035, U.S.A.
Tel: +1-408-432-8888, Fax: +1-408-434-5351

Renesas Electronics Canada Limited
9251 Yonge Street, Suite 8309 Richmond Hill, Ontario Canada L4C 9T3
Tel: +1-905-237-2004

Renesas Electronics Europe Limited
Dukes Meadow, Millboard Road, Bourne End, Buckinghamshire, SL8 5FH, U.K
Tel: +44-1628-651-700, Fax: +44-1628-651-804

Renesas Electronics Europe GmbH
Arcadiastrasse 10, 40472 Düsseldorf, Germany
Tel: +49-211-6503-0, Fax: +49-211-6503-1327

Renesas Electronics (China) Co., Ltd.
Room 1709 Quantum Plaza, No.27 ZhichunLu, Haidian District, Beijing, 100191 P. R. China
Tel: +86-10-8235-1155, Fax: +86-10-8235-7679

Renesas Electronics (Shanghai) Co., Ltd.
Unit 301, Tower A, Central Towers, 555 Langao Road, Putuo District, Shanghai, 200333 P. R. China
Tel: +86-21-2226-0888, Fax: +86-21-2226-0999

Renesas Electronics Hong Kong Limited
Unit 1601-1611, 16/F., Tower 2, Grand Century Place, 193 Prince Edward Road West, Mongkok, Kowloon, Hong Kong
Tel: +852-2265-6688, Fax: +852 2886-9022

Renesas Electronics Taiwan Co., Ltd.
13F, No. 363, Fu Shing North Road, Taipei 10543, Taiwan
Tel: +886-2-8175-9600, Fax: +886 2-8175-9670

Renesas Electronics Singapore Pte. Ltd.
80 Bendemeer Road, Unit #06-02 Hyflux Innovation Centre, Singapore 339949
Tel: +65-6213-0200, Fax: +65-6213-0300

Renesas Electronics Malaysia Sdn.Bhd.
Unit 1207, Block B, Menara Amcorp, Amcorp Trade Centre, No. 18, Jln Persiaran Barat, 46050 Petaling Jaya, Selangor Darul Ehsan, Malaysia
Tel: +60-3-7955-9390, Fax: +60-3-7955-9510

Renesas Electronics India Pvt. Ltd.
No.777C, 100 Feet Road, HAL 2nd Stage, Indiranagar, Bangalore 560 038, India
Tel: +91-80-67208700, Fax: +91-80-67208777

Renesas Electronics Korea Co., Ltd.
17F, KAMCO Yangjae Tower, 262, Gangnam-daero, Gangnam-gu, Seoul, 06265 Korea
Tel: +82-2-558-3737, Fax: +82-2-558-5338

© 2018 Renesas Electronics Corporation. All rights reserved.

Colophon 5.0

RH850/P1x

Renesas Electronics Corporation

R01UH0436EJ0140