Package Outline Drawing

L20.3.5x4
20 Lead Quad Flat No-Lead Package (QFN)
Rev 3, 12/2022

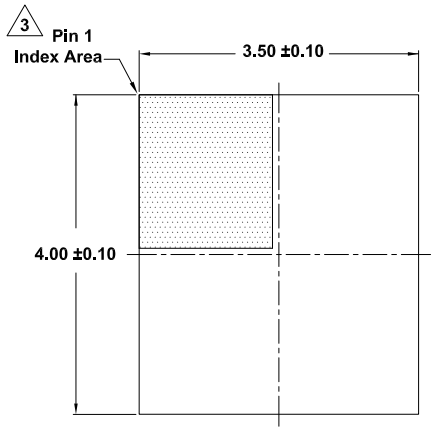

Top View

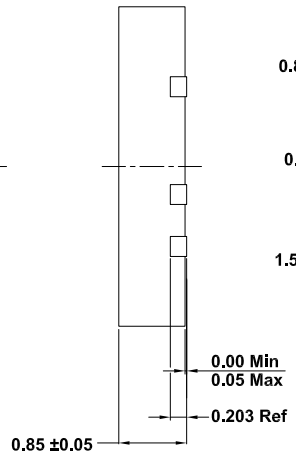

Side View

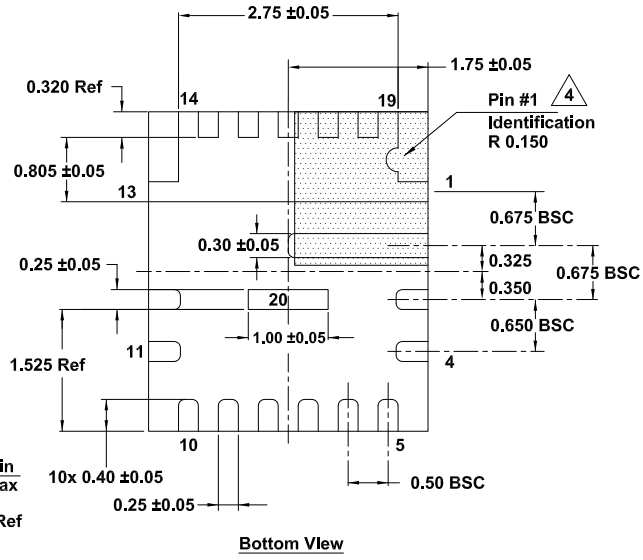

Bottom View

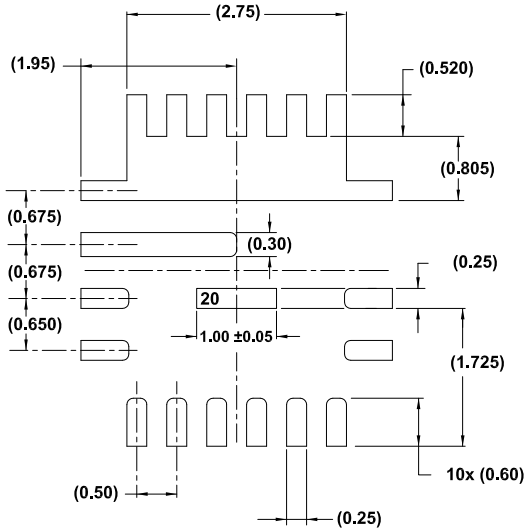

Typical Recommended Land Pattern

Notes:

1. Dimensions are in millimeters.
   Dimensions in ( ) for reference only.
2. Dimensioning and tolerancing conform to ASME Y14.5m-1994.
3. The configuration of the pin #1 identifier is optional, but must be located within the zone indicated. The pin #1 identifier can be either a mold or mark feature.
4. Pin 1 corner chamfer not required.
5. Unless otherwise specified, tolerance: Decimal ±0.05