Package Outline Drawing

M16.173C
16 Lead Heatsink Thin Shrink Small Outline Package (HTSSOP)
Rev 0, 5/2022

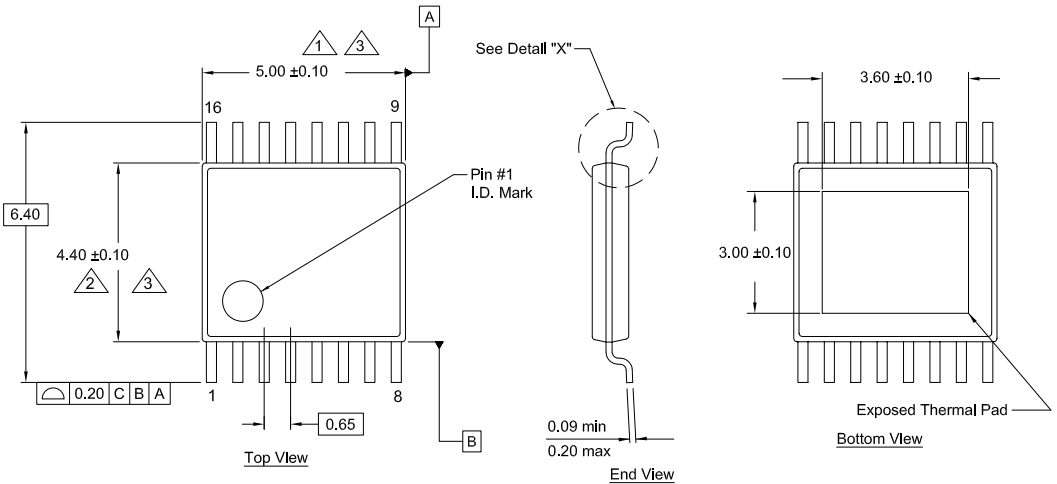

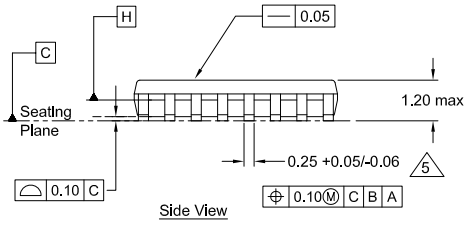

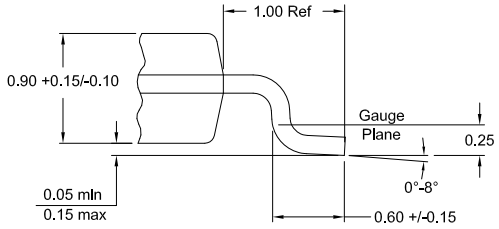

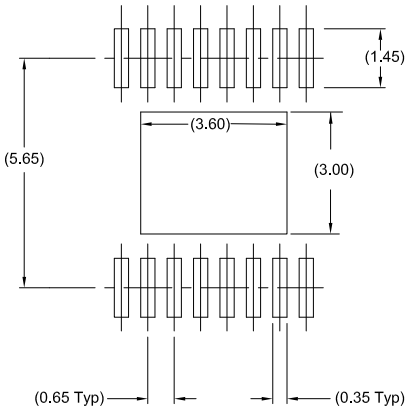

Typical Recommended Land Pattern

Notes:

1. Dimension does not include mold flash, protrusions or gate burrs. Mold flash, protrusions or gate burrs can not exceed 0.15 per side.
2. Dimension does not include interlead flash or protrusion. Interlead flash or protrusion can not exceed 0.25 per side.
3. Dimensions are measured at datum plane H.
4. Dimensioning and tolerancing per ASME Y14.5M-1994.
5. Dimension does not include dambar protrusion. Allowable protrusion is 0.08mm total in excess of dimension at maximum material condition. Minimum space between protrusion and adjacent lead is 0.07mm.
6. Dimensions in ( ) are for reference only.
7. Conforms to JEDEC MO-153