JEITA Package Code	RENESAS Code	Previous Code	MASS[Typ.]
P-HFQFP256-28x28-0.40	PRQP0256LA-B	FP-256G/FP-256GV	5.4g

NOTE)
1. DIMENSIONS"*1"AND"*2" DO NOT INCLUDE MOLD FLASH
2. DIMENSION"*3"DOES NOT INCLUDE TRIM OFFSET.

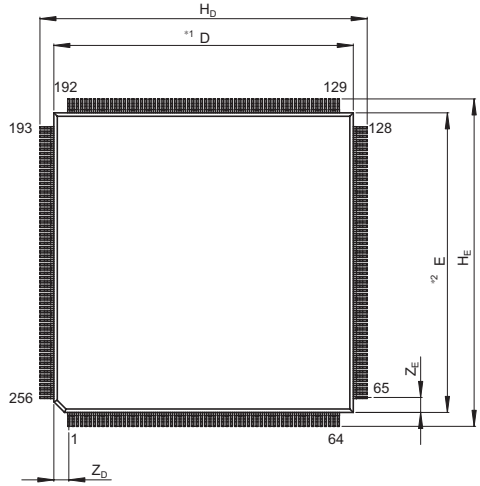

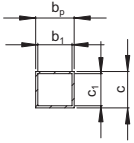

Terminal cross section

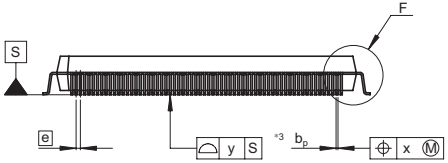

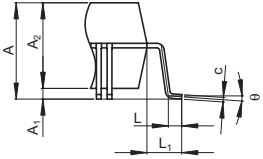

Detail F

Reference Symbol	Dimension in Millimeters		
	Min	Nom	Max
D	—	28	—
E	—	28	—
A_2	—	3.20	—
H_D	30.4	30.6	30.8
H_E	30.4	30.6	30.8
A	—	—	3.95
A_1	0.25	0.40	0.50
b_p	0.13	0.18	0.23
b_1	—	0.16	—
c	0.12	0.17	0.22
c_1	—	0.15	—
θ	0°	—	8°
e	—	0.4	—
x	—	—	0.11
y	—	—	0.08
Z_D	—	1.40	—
Z_E	—	1.40	—
L	0.3	0.5	0.7
L_1	—	1.3	—