Package Outline Drawing

W9x12.108

108 BALL WAFER LEVEL CHIP SCALE PACKAGE (WLCSP 0.4mm Pitch)

Rev 0, 1/16

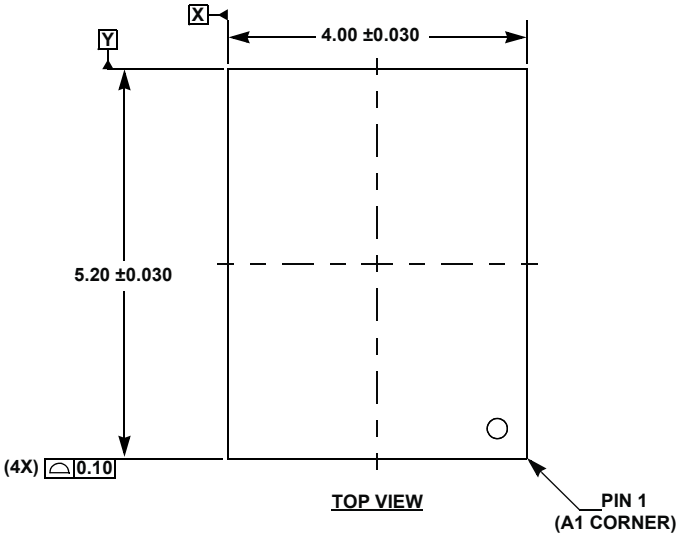

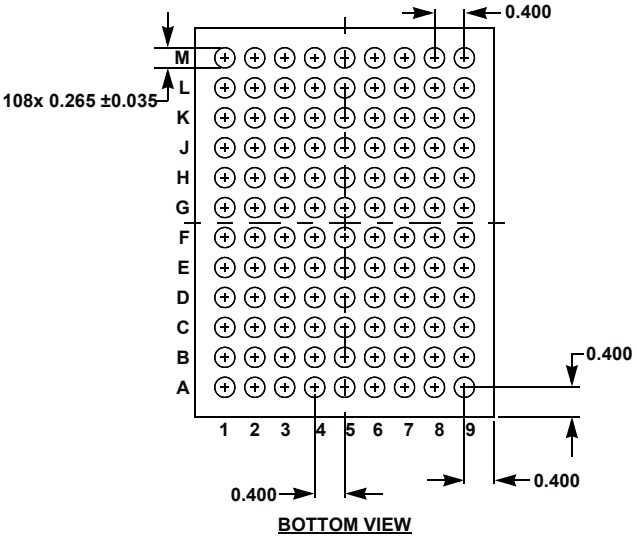

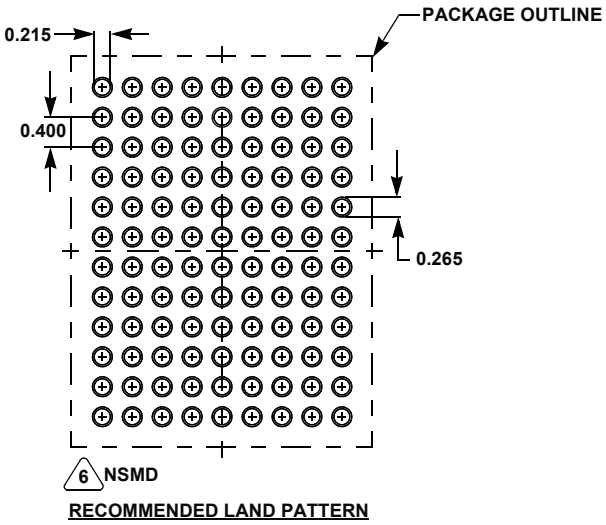

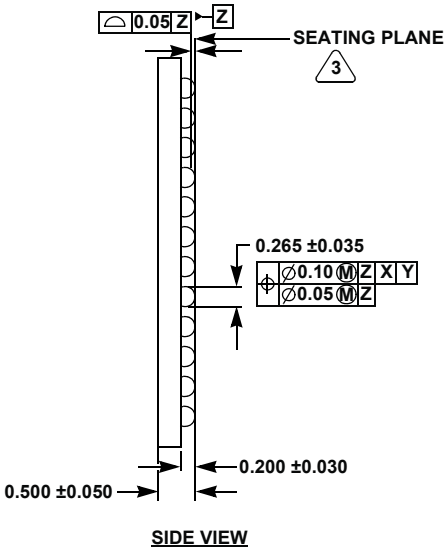

NOTES:

1. All dimensions are in millimeters.
2. Dimensions and tolerance per ASMEY 14.5 - 1994.
3. Primary datum Z and seating plane are defined by the spherical crowns of the bump.
4. Dimension is measured at the maximum bump diameter parallel to primary datum Z.
5. Bump position designation per JESD 95-1, SPP-010.
6. NSMD refers to non-solder mask defined pad design per Intersil Techbrief TB451.