Taping code	Package name	Renesas code	Previous code	Packing form
TR(P), TL(H)	MPAK-5	PLSP0005ZC-A	MPAK-5, MPAK-5V	Non dry pack

Unit : mm

Taping code欄の（　）内は新コードです。

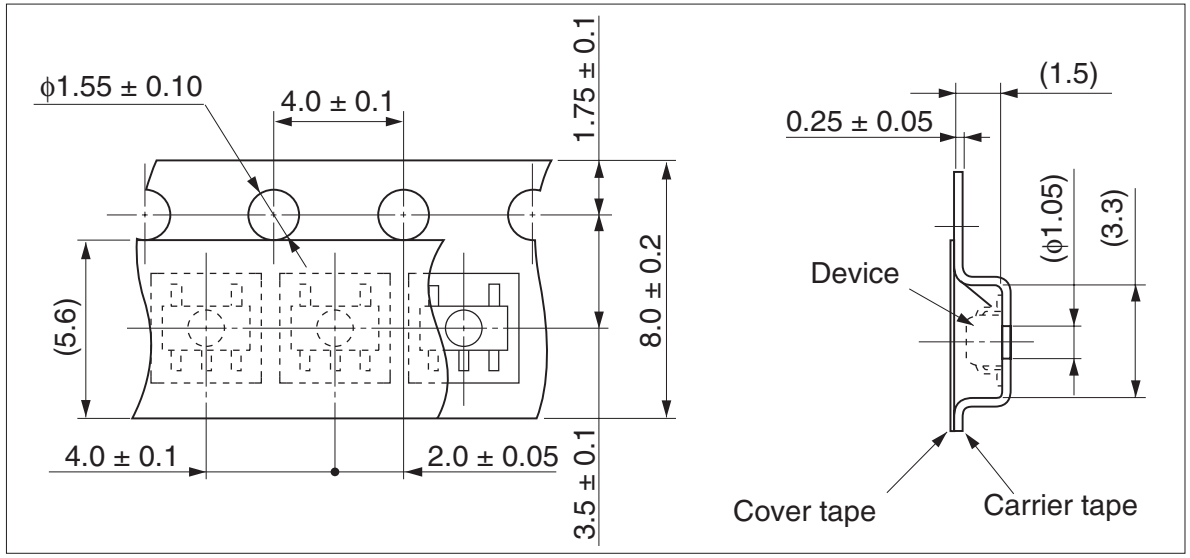

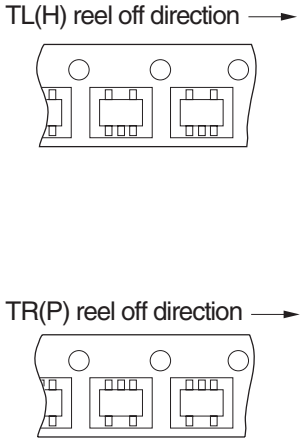

Reel type A

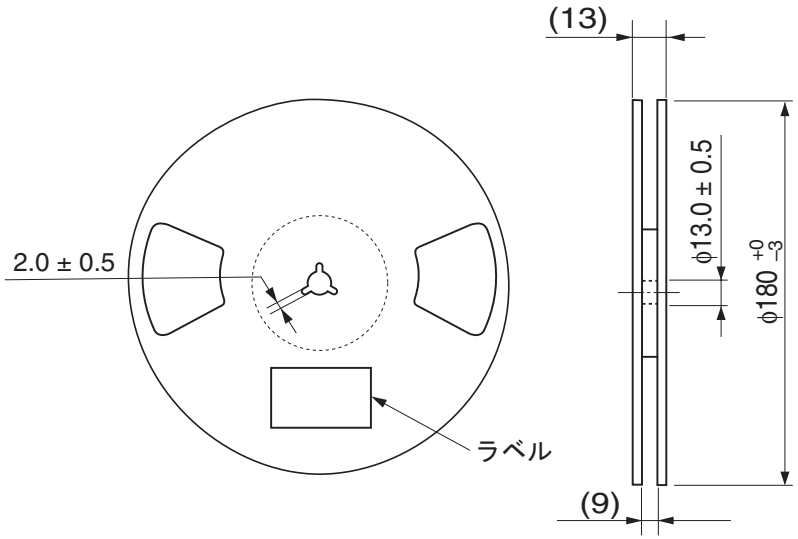

© 2012 Renesas Electronics Corporation. All rights reserved.