32-FCLGA, Package Outline Drawing

6.00 x 6.00 x 0.75 mm Body, 4.60 x 4.60 mm Epad, 0.5mm Pitch

LFG32P1, PSC-4813-01, Rev 01, Page 1

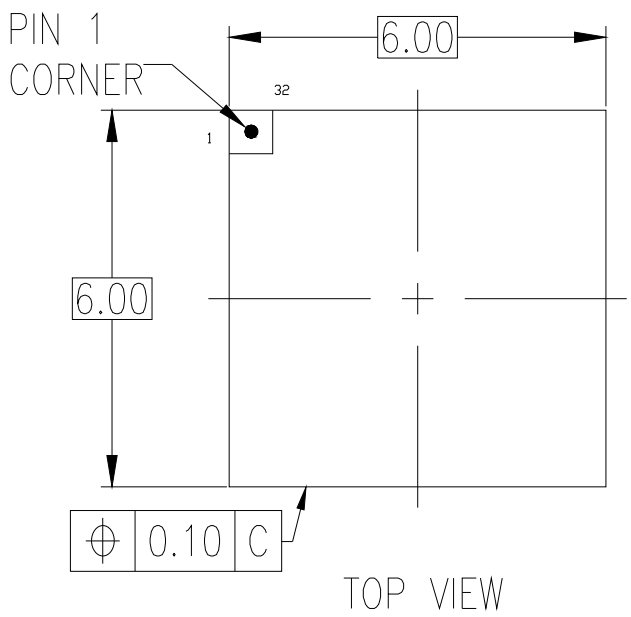

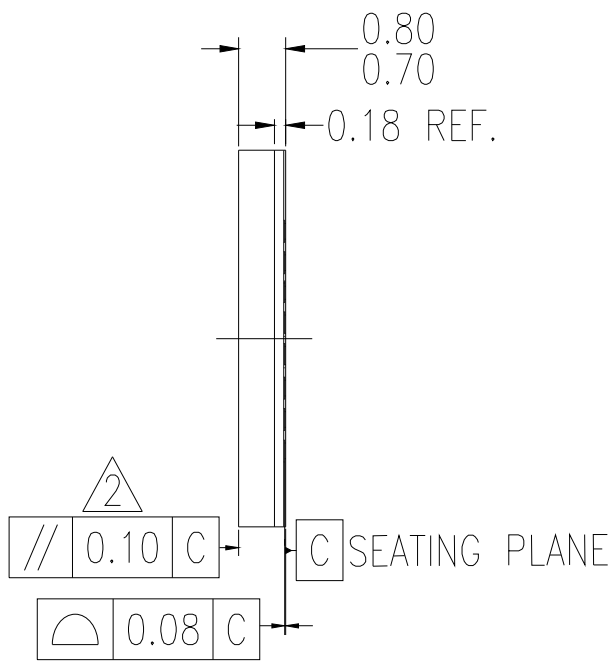

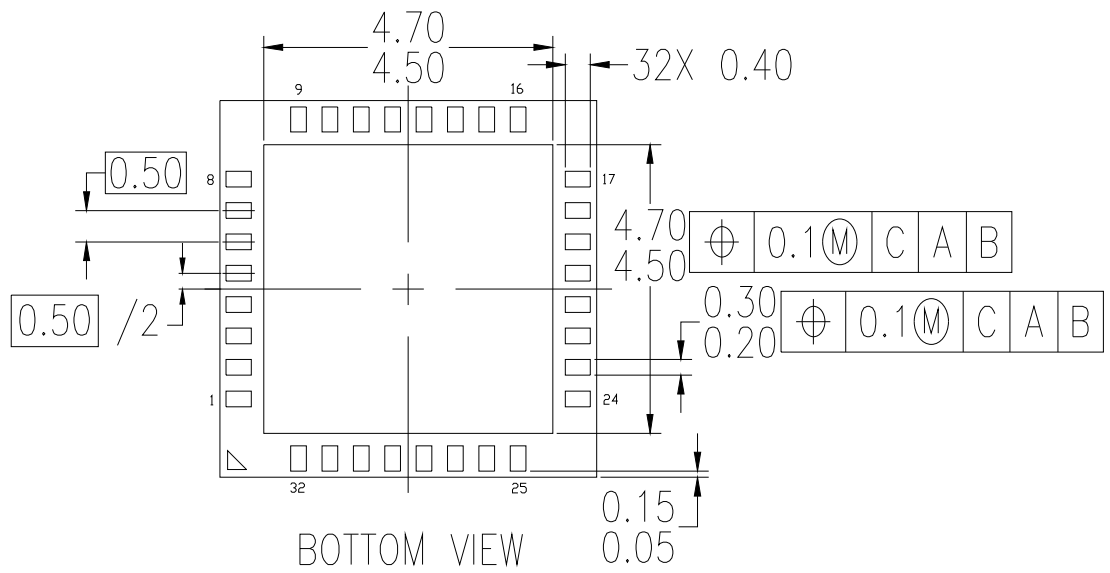

NOTES:

1. ALL DIMENSIONS IN MM.
2. PARALLELISM MEASUREMENT SHALL EXCLUDE ANY EFFECT OF MARK ON TOP SURFACE OF PACKAGE.

© Renesas Electronics Corporation

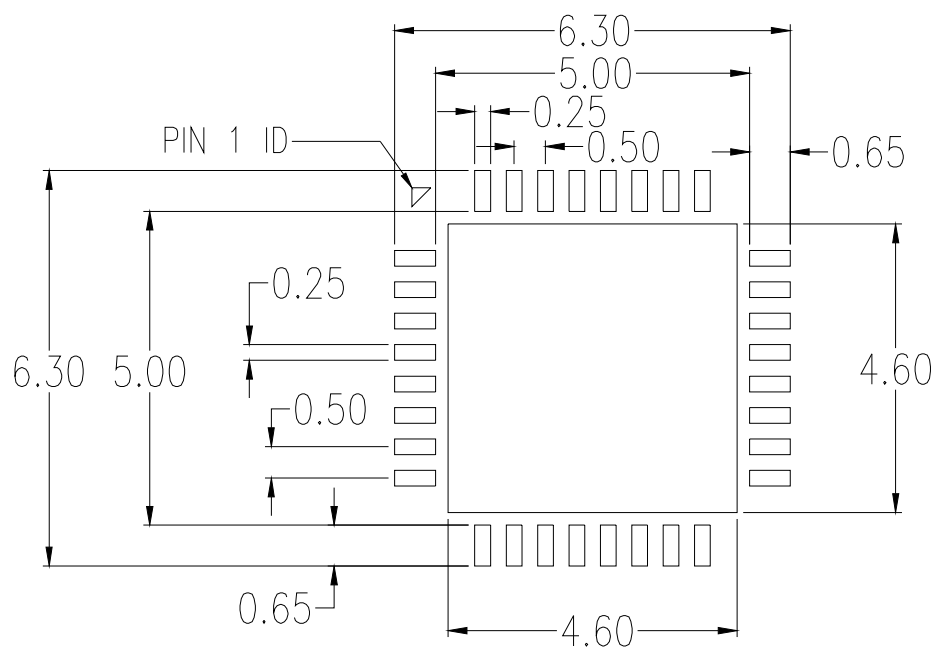

RECOMMENDED LAND PATTERN DIMENSION

NOTES:
1. ALL DIMENSIONS ARE IN MM. ANGLES IN DEGREES.
2. TOP DOWN VIEW. AS VIEWED ON PCB.
3. LAND PATTERN RECOMMENDATION PER IPC-7351B GENERIC REQUIREMENT FOR SURFACE MOUNT DESIGN AND LAND PATTERN.

Package Revision History		
Date Created	Rev No.	Description
Apr 27, 2021	Rev 01	Update A1 to 0.18
July 18, 2019	Rev 00	Initial Release

© Renesas Electronics Corporation