NOTES:

1. ALL DIMENSIONS AND TOLERANCES ARE PER ASME Y14.5M-1994.
2. ALL DIMENSIONS ARE IN MILLIMETERS.
3. SEATING PLANE AND PRIMARY DATUM -C- ARE DEFINED BY THE CONTACT POINTS OF THREE OR MORE SOLDER BALLS THAT SUPPORT THE DEVICE WHEN PLACED ON A TOP OF A PLANAR SURFACE.
4. BOTTOM PIN#1 INDICATOR OPTIONAL.

REVISIONS				
DCN	REV	DESCRIPTION	DATE	APPROVED
	00	INITIAL RELEASE	02/04/11	MR

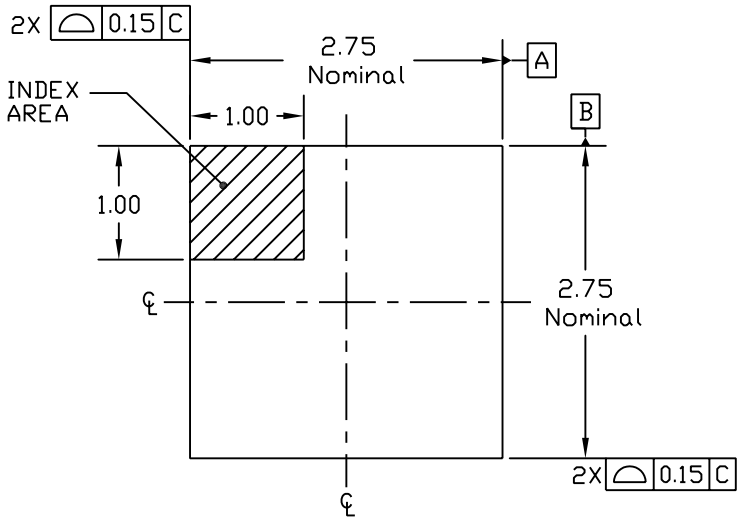

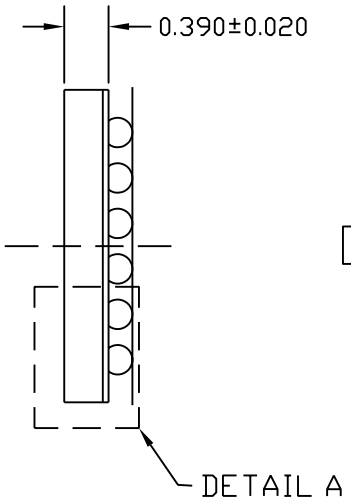

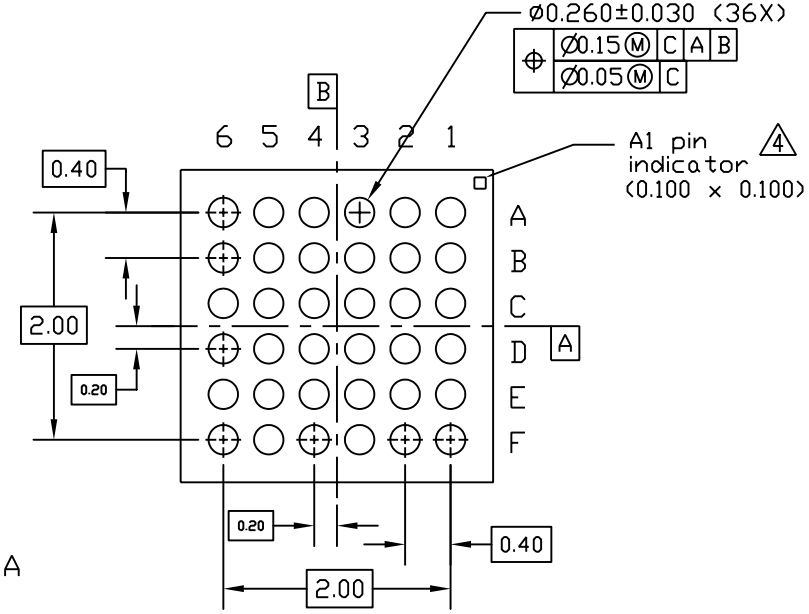

DETAIL A
(ROTATED 90 DEG CW)

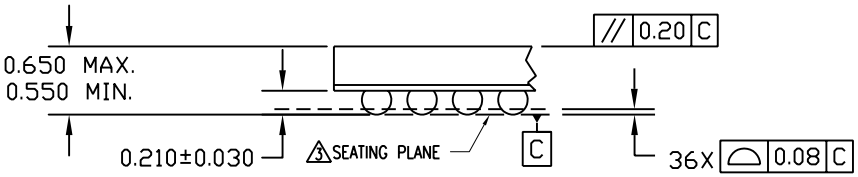

TOLERANCES UNLESS SPECIFIED DECIMAL ANGULAR XX± 0.05 ± XXX± 0.012 XXXX±	IDT™ www.IDT.com	6024 SILVER CREEK VALLEY ROAD. SAN JOSE, CA 95138 PHONE: (408) 284-8200 FAX: (408) 284-3572	
APPROVALS / DATE	TITLE	AHG36 PACKAGE OUTLINE 2.75 x 2.75 mm BODY 0.4mm PITCH DSBGA	
DRAWN ma 19/11/10			
CHECKED			
	SIZE C	DRAWING No. PSC-4319	REV 00
	DO NOT SCALE DRAWING		SHEET 1 OF 1