Package Outline Drawing

24 Lead Quad Flat No-Lead Plastic Package

POD Number: L24.4x5G, Revision: 04, Date Created: Feb 21, 2024

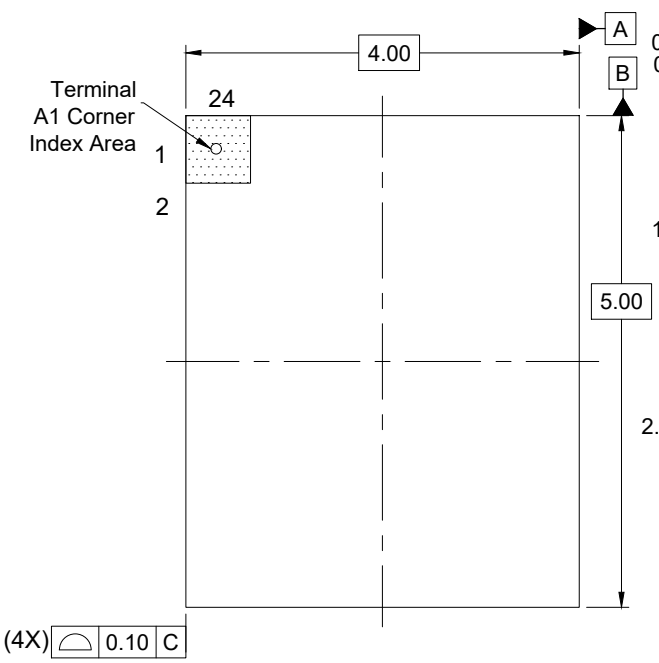

Top View

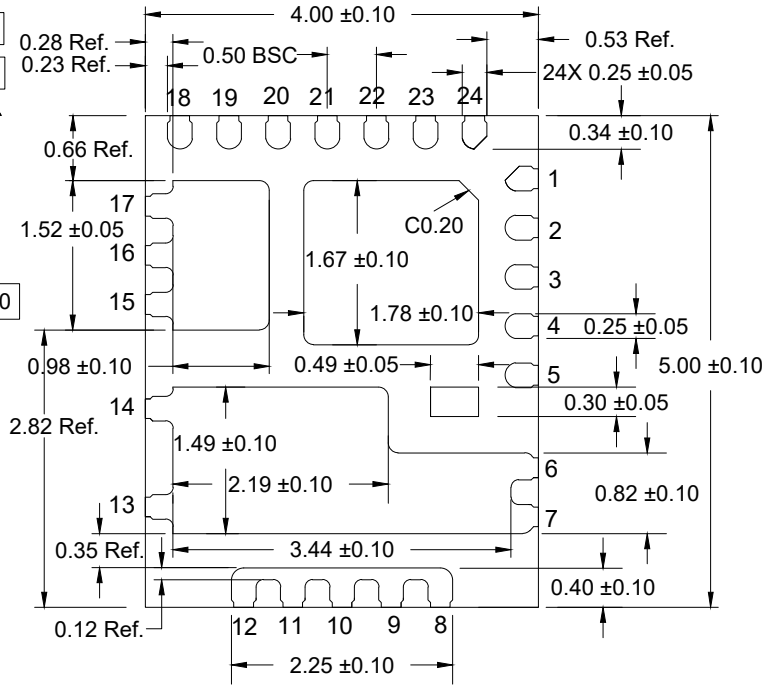

Bottom View

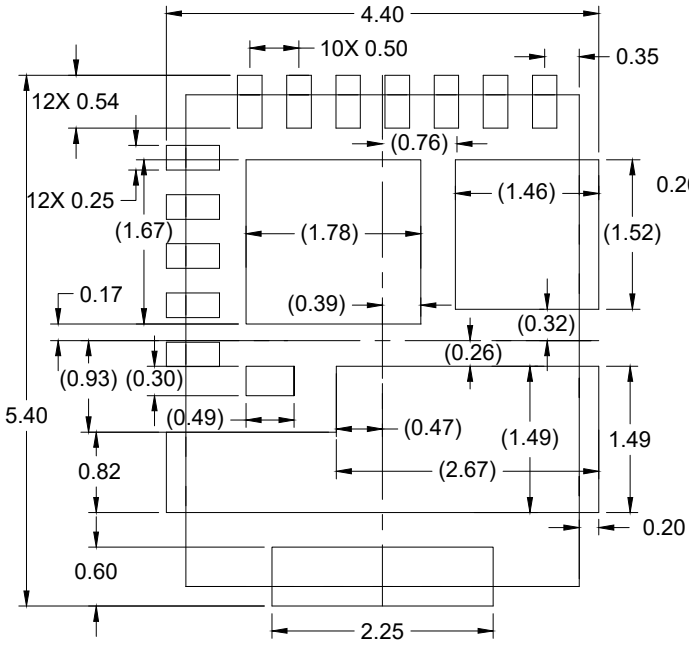

Recommended Land Pattern

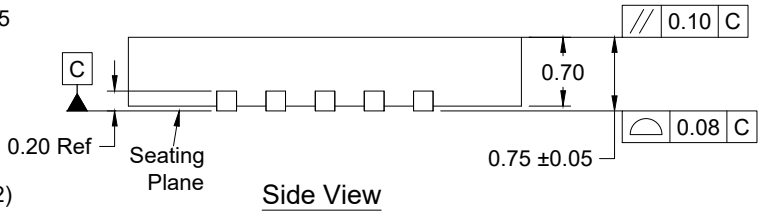

Side View

Notes:

1. Dimensioning and tolerancing conforms to ASME Y14.5M - 1994.
2. All dimensions are in millimeters. Dimensions in ( ) for reference only.

© Renesas Electronics Corporation