JEITA Package Code	RENESAS Code	Previous Code	MASS[Typ.]
P-BGA256-27x27-1.27	PRBG0256DM-A	—	2.8g

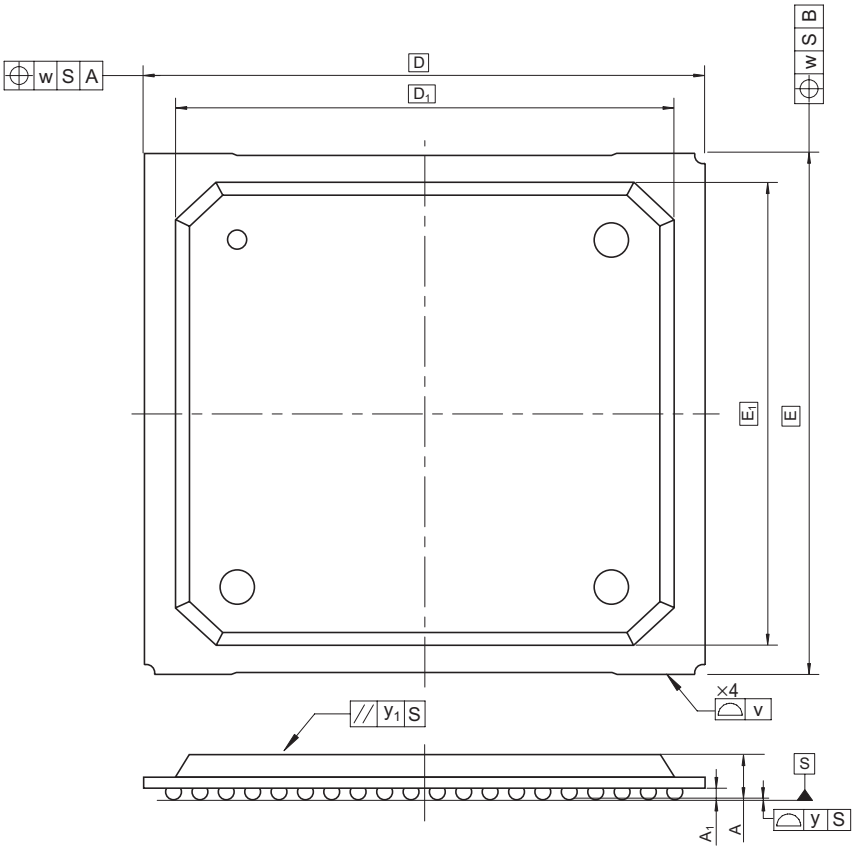

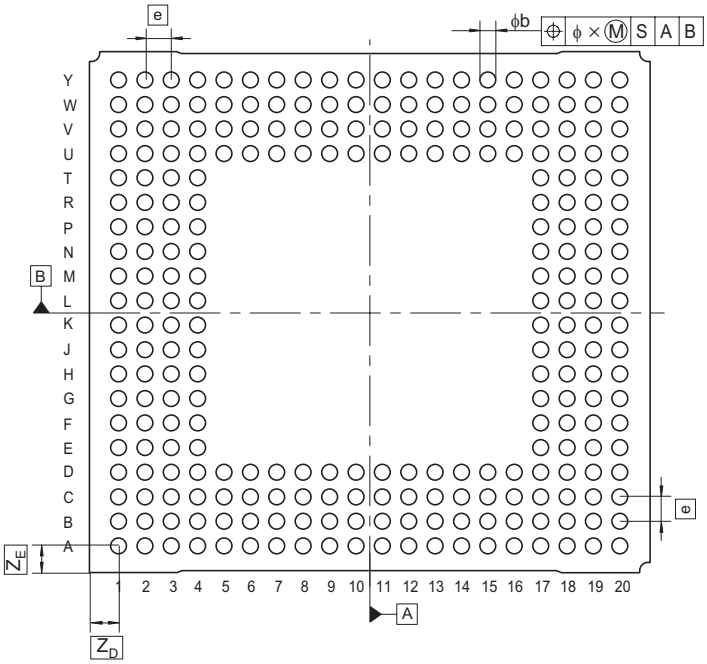

Reference Symbol	Dimension in Millimeters		
	Min	Nom	Max
D	—	27.0	—
E	—	27.0	—
v	—	—	0.20
w	—	—	0.30
A	—	—	2.6
A_1	0.50	0.60	0.70
e	—	1.27	—
b	0.60	0.75	0.90
x	—	—	0.15
y	—	—	0.20
y_1	—	—	0.35
Z_D	—	1.435	—
Z_E	—	1.435	—
D_1	—	24.0	—
E_1	—	24.0	—

© 2013 Renesas Electronics Corporation. All rights reserved.