## 256-PIN PLASTIC BGA (17x17)

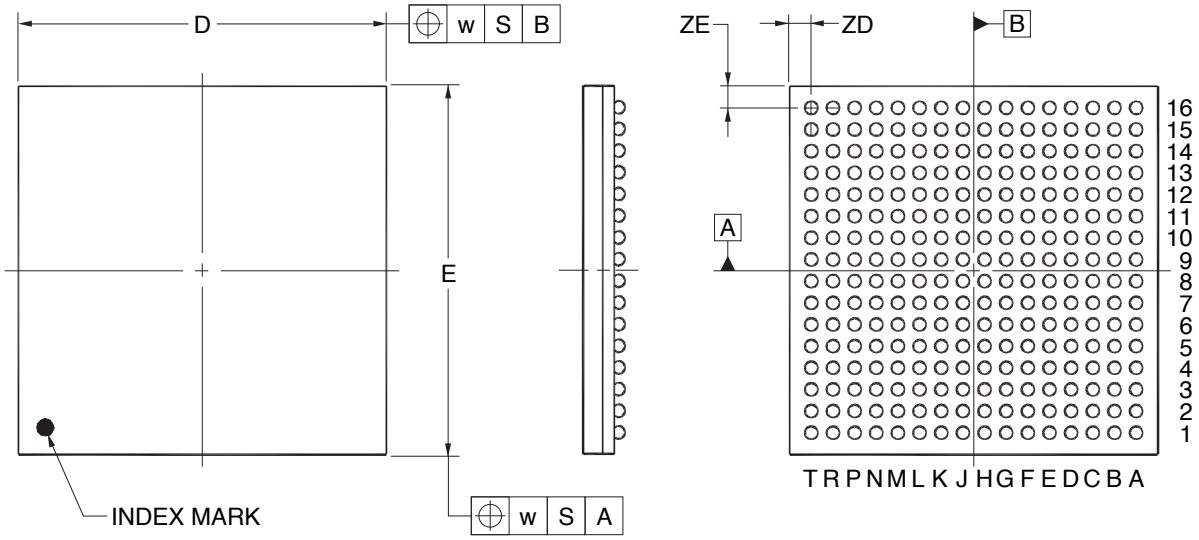


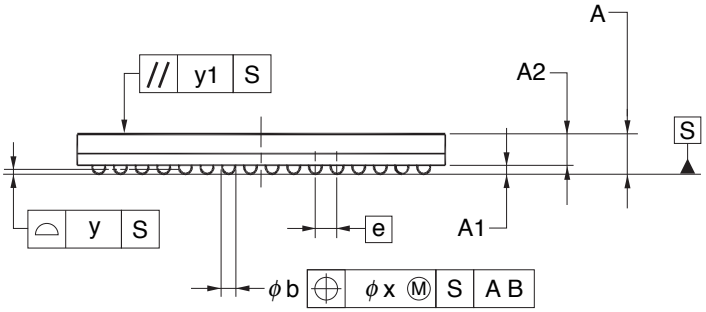


(UNIT:mm)

| ITEM | DIMENSIONS |
|---|---|
| D | 17.00±0.10 |
| E | 17.00±0.10 |
| w | 0.30 |
| e | 1.00 |
| A | 1.93±0.12 |
| A1 | 0.50±0.10 |
| A2 | 1.43 |
| b | 0.60±0.10 |
| x | 0.10 |
| y | 0.15 |
| y1 | 0.35 |
| ZD | 1.00 |
| ZE | 1.00 |

**P256F1-100-GN6-1**

© 2010 Renesas Electronics Corporation. All rights reserved.