JEITA Package Code	RENESAS Code	Previous Code	MASS[Typ.]
P-FQFP128-14x20-0.50	PRQP0128KB-A	FP-128B/FP-128BV	1.7g

NOTE)
1. DIMENSIONS"*1"AND"*2" DO NOT INCLUDE MOLD FLASH
2. DIMENSION"*3"DOES NOT INCLUDE TRIM OFFSET.

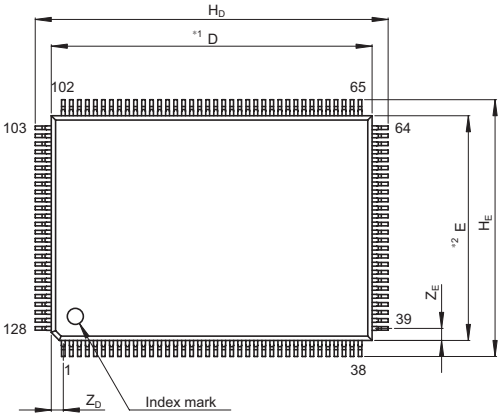

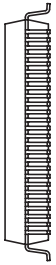

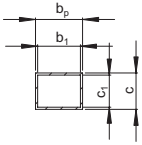

Terminal cross section

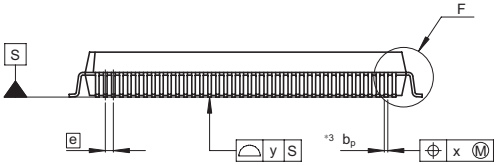

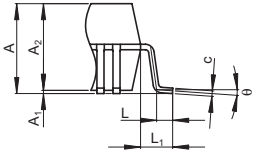

Detail F

Reference Symbol	Dimension in Millimeters		
	Min	Nom	Max
D	—	20	—
E	—	14	—
A_2	—	2.70	—
H_D	21.8	22.0	22.2
H_E	15.8	16.0	16.2
A	—	—	3.15
A_1	0.00	0.10	0.25
b_p	0.17	0.22	0.27
b_1	—	0.20	—
c	0.12	0.17	0.22
c_1	—	0.15	—
θ	0°	—	8°
e	—	0.5	—
x	—	—	0.10
y	—	—	0.10
Z_D	—	0.75	—
Z_E	—	0.75	—
L	0.3	0.5	0.7
L_1	—	1.0	—