160-PIN PLASTIC QFP(28x28)

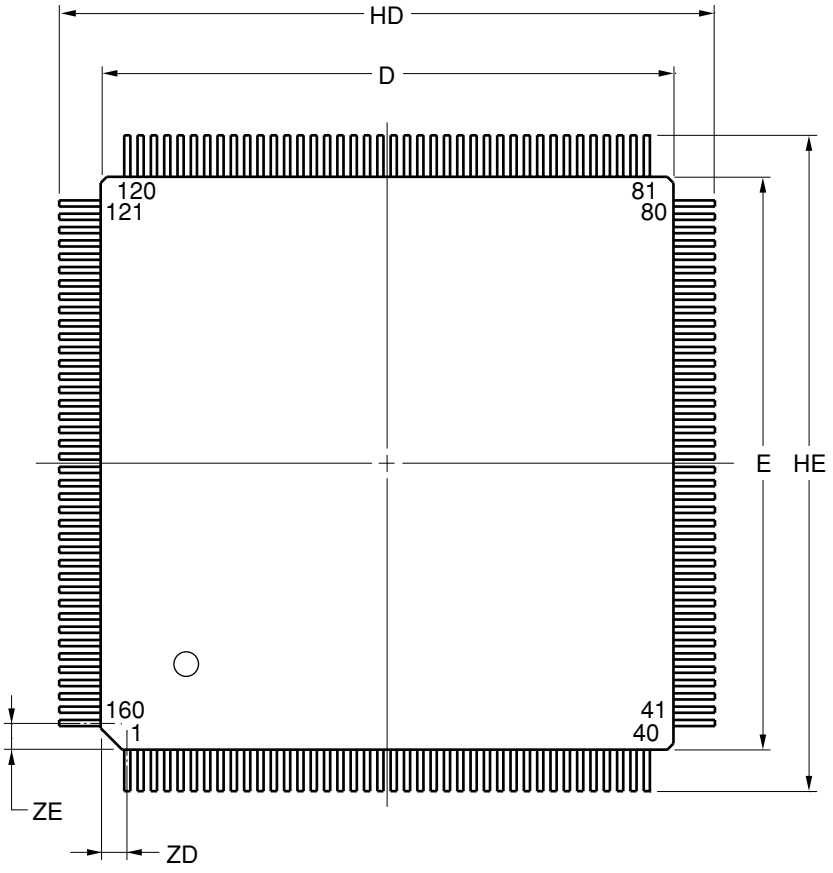

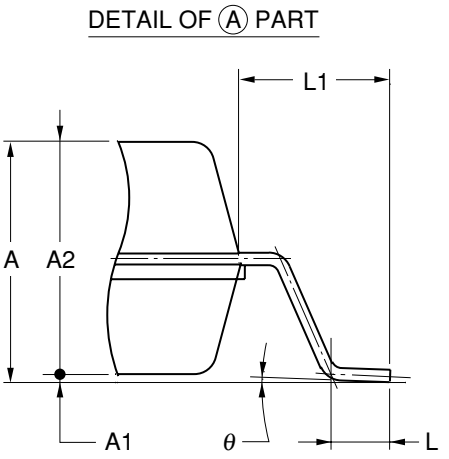

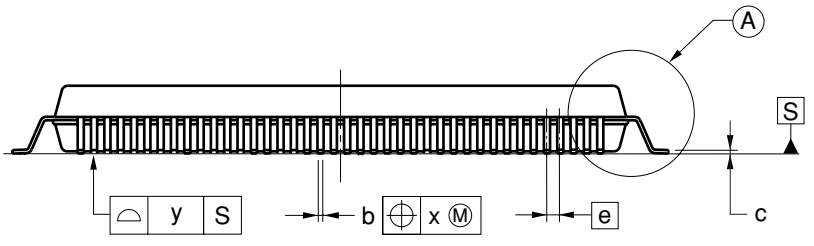

(UNIT:mm)

ITEM	DIMENSIONS
D	28.0±0.2
E	28.0±0.2
HD	32.0±0.3
HE	32.0±0.3
A	3.5MAX
A1	0.1±0.1
A2	3.2±0.1
b	$0.32^{+0.08}_{-0.07}$
c	$0.17^{+0.08}_{-0.07}$
L	0.8±0.2
L1	2.0±0.2
θ	5°±5°
e	0.65
x	0.13
y	0.10
ZD	1.325
ZE	1.325

P160GD-65-WBD

NOTE
Each lead centerline is located within 0.13mm of its true position at maximum material condition.