JEITA Package Code	RENESAS Code	Previous Code	MASS[Typ.]
P-LFQFP176-20x20-0.40	PLQP0176LA-A	176P6R-A	1.2g

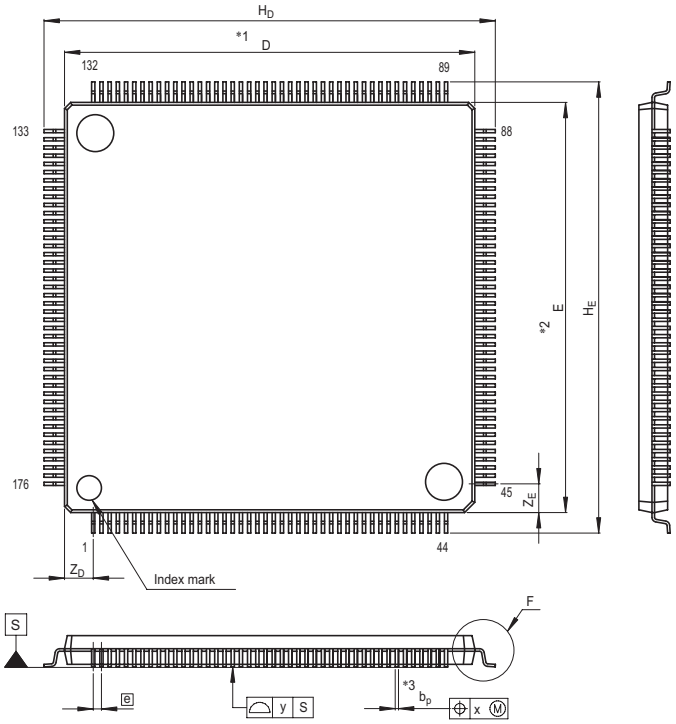

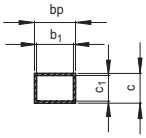

Terminal cross section

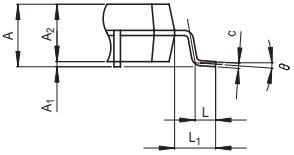

Detail F

NOTE)
1. DIMENSIONS "*1" AND "*2" DO NOT INCLUDE MOLD FLASH.
2. DIMENSION "*3" DOES NOT INCLUDE TRIM OFFSET.

Reference Symbol	Dimension in Millimeters		
	Min	Nom	Max
D	19.9	20.0	20.1
E	19.9	20.0	20.1
A_2	—	1.4	—
H_D	21.8	22.0	22.2
H_E	21.8	22.0	22.2
A	—	—	1.7
A_1	0.05	0.125	0.2
b_p	0.13	0.18	0.23
b_1	—	0.16	—
c	0.09	0.145	0.20
c_1	—	0.125	—
θ	0°	—	8°
e	—	0.4	—
x	—	—	0.07
y	—	—	0.10
Z_D	—	1.4	—
Z_E	—	1.4	—
L	0.35	0.5	0.65
L_1	—	1.0	—