Package Outline Drawing

Q128.14x20F
128 Lead Low Plastic Quad Flatpack Package (LQFP)

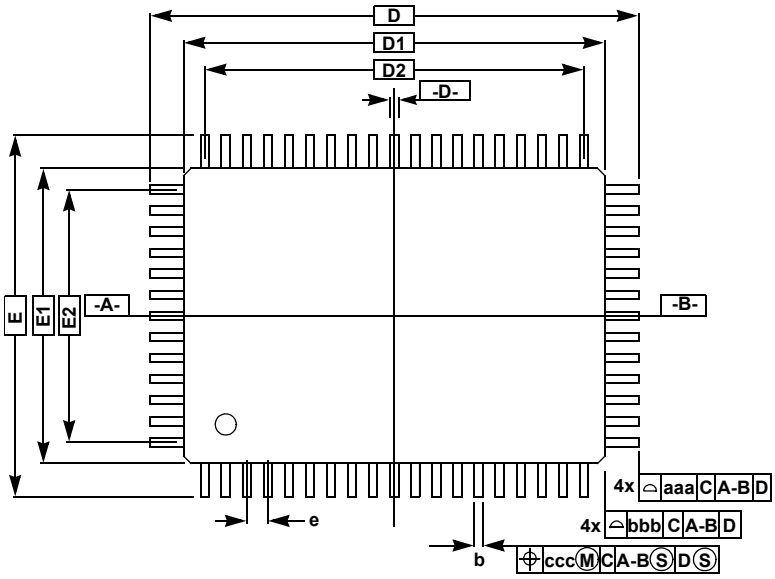

Top View

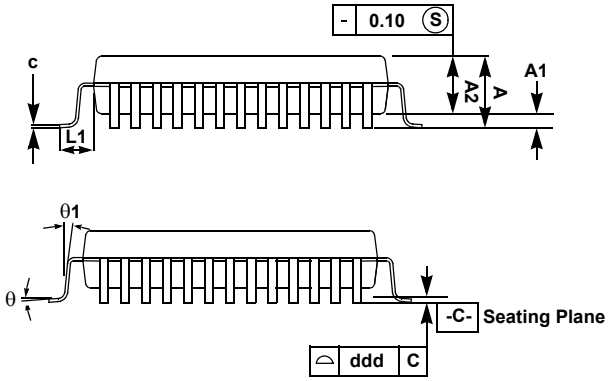

Side View

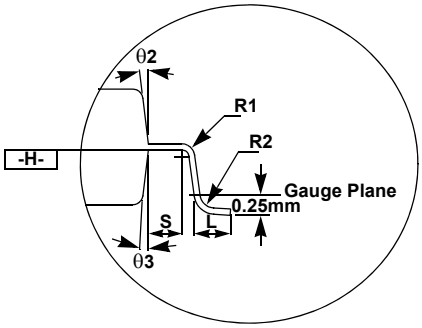

Detail

Symbol	Millimeter			Inch		
	Min	Nom	Max	Min	Nom	Max
A	-	-	1.60	-	-	0.063
A1	0.05	-	0.15	0.002	-	0.006
A2	1.35	1.40	1.45	0.053	0.055	0.057
D	22.00 BSC			0.866 BSC		
D1	20.00 BSC			0.787 BSC		
E	16.00 BSC			0.630 BSC		
E1	14.00 BSC			0.551 BSC		
R2	0.08	-	0.20	0.003	-	0.008
R1	0.08	-	-	0.003	-	-
θ	0°	3.5°	7°	0°	3.5°	7°
θ1	0°	-	-	0°	-	-
θ2	11°	12°	13°	11°	12°	13°
θ3	11°	12°	13°	11°	12°	13°
c	0.09	-	0.20	0.004	-	0.008
L	0.45	0.60	0.75	0.018	0.024	0.030
L1	1.00 REF			0.039 REF		
S	0.20	-	-	0.008	-	-
b	0.170	0.200	0.270	0.007	0.008	0.011
e	0.50 BSC			0.020 BSC		
D2	18.50			0.728		
E2	12.50			0.492		
Tolerances Form and Position						
aaa	0.20			0.008		
bbb	0.20			0.008		
ccc	0.08			0.003		
ddd	0.08			0.003		

Rev 3 1/19

Notes:

1. Dimension D1 and E1 do not include mold protrusion. Allowable protrusion is 0.25mm per side. Dimensions D1 and E1 do include mold mismatch and are determined at datum plane -H-.
1. Dimension b does not include dambar protrusion. Allowable dambar protrusion shall be 0.08mm total in excess of the b dimension at maximum material condition. Dambar cannot be located on the lower radius or the lead foot.