Package Outline Drawing

L72.10x10F

72 LEAD QUAD FLAT NO-LEAD PLASTIC PACKAGE

Rev 1, 4/12

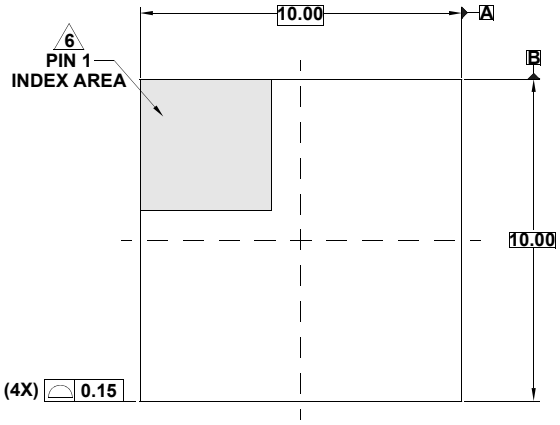

TOP VIEW

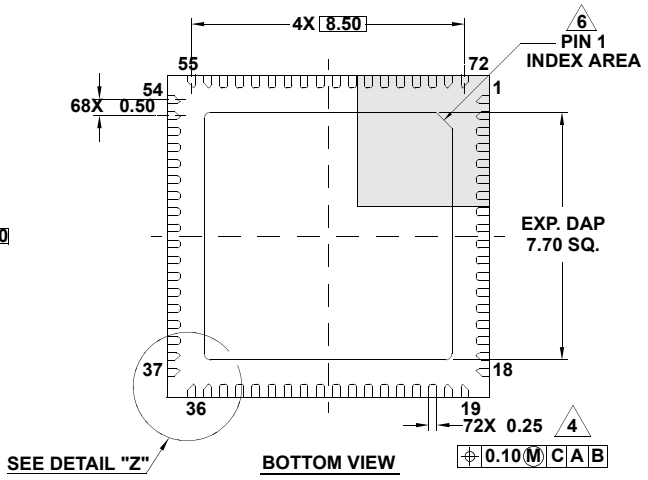

BOTTOM VIEW

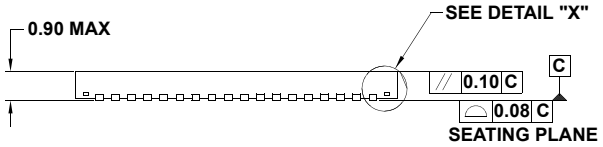

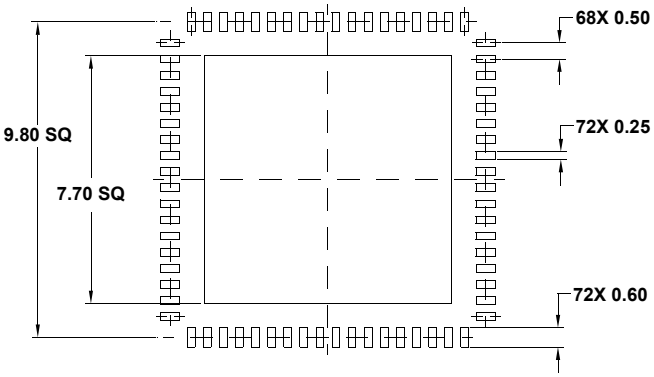

TYPICAL RECOMMENDED LAND PATTERN

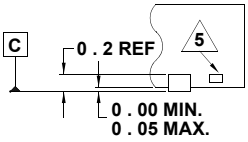

DETAIL "Y"

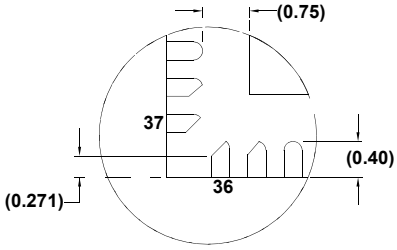

DETAIL "Z"

NOTES:

1. Dimensions are in millimeters.
   Dimensions in ( ) for Reference Only.
2. Dimensioning and tolerancing conform to ASME Y14.5m-1994.
3. Unless otherwise specified, tolerance : Decimal ± 0.05
4. Dimension applies to the metallized terminal and is measured between 0.15mm and 0.30mm from the terminal tip.
5. Tiebar shown (if present) is a non-functional feature.
6. The configuration of the pin #1 identifier is optional, but must be located within the zone indicated. The pin #1 identifier may be either a mold or mark feature.
7. Package outline compliant to JESD-MO220.