## 42-PIN PLASTIC SDIP (15.24mm(600))

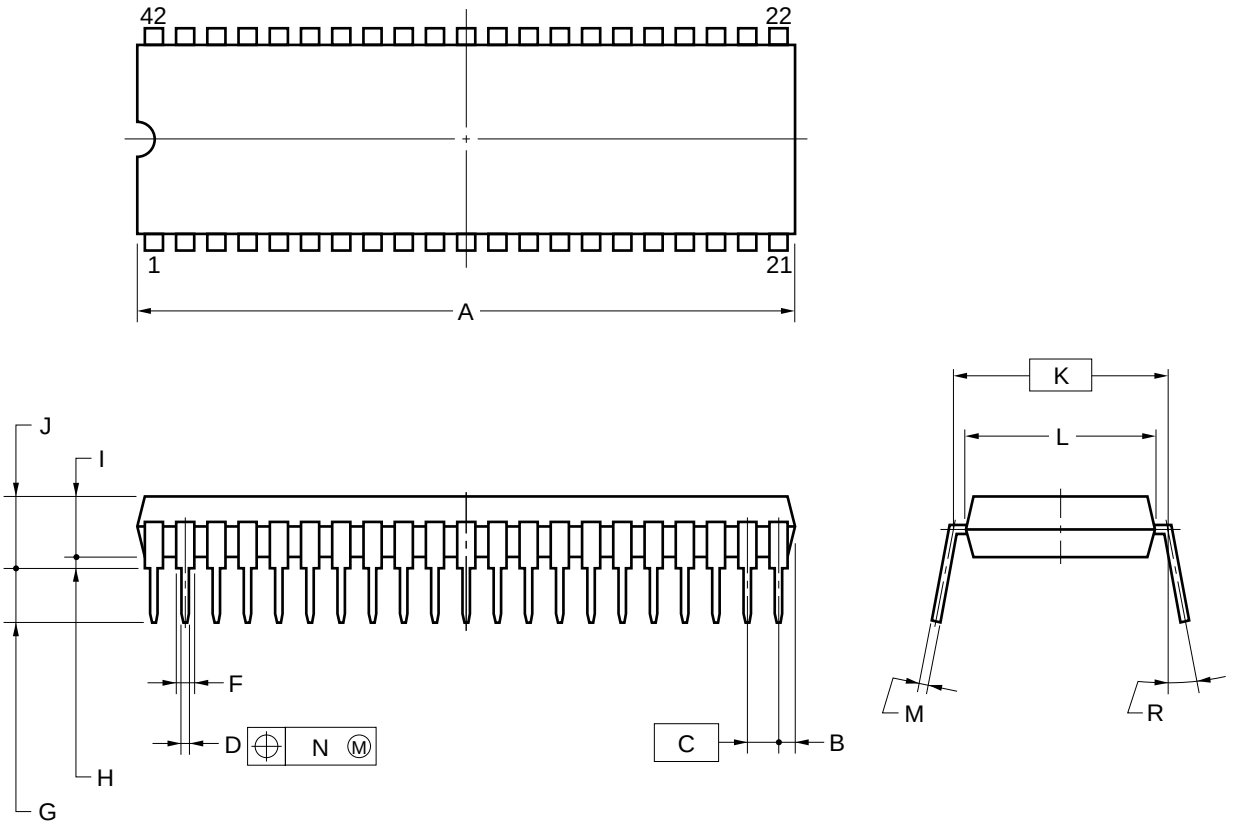


**NOTES**

1. Each lead centerline is located within 0.17 mm of its true position (T.P.) at maximum material condition.

2. Item "K" to center of leads when formed parallel.

| ITEM | MILLIMETERS |
|---|---|
| A | 39.13 MAX. |
| B | 1.78 MAX. |
| C | 1.778 (T.P.) |
| D | 0.50±0.10 |
| F | 0.9 MIN. |
| G | 3.2±0.3 |
| H | 0.51 MIN. |
| I | 4.31 MAX. |
| J | 5.08 MAX. |
| K | 15.24 (T.P.) |
| L | 13.2 |
| M | $0.25^{+0.10}_{-0.05}$ |
| N | 0.17 |
| R | 0~15° |

**P42C-70-600A-2**