VFQFPN-88, Package Outline Drawing

12.0 x 12.0 x 0.85 mm Body, 0.5mm Pitch, Epad 8.50 x 8.50 mm

NYG88P1, PSC-4707-01, Rev 01, Page 1

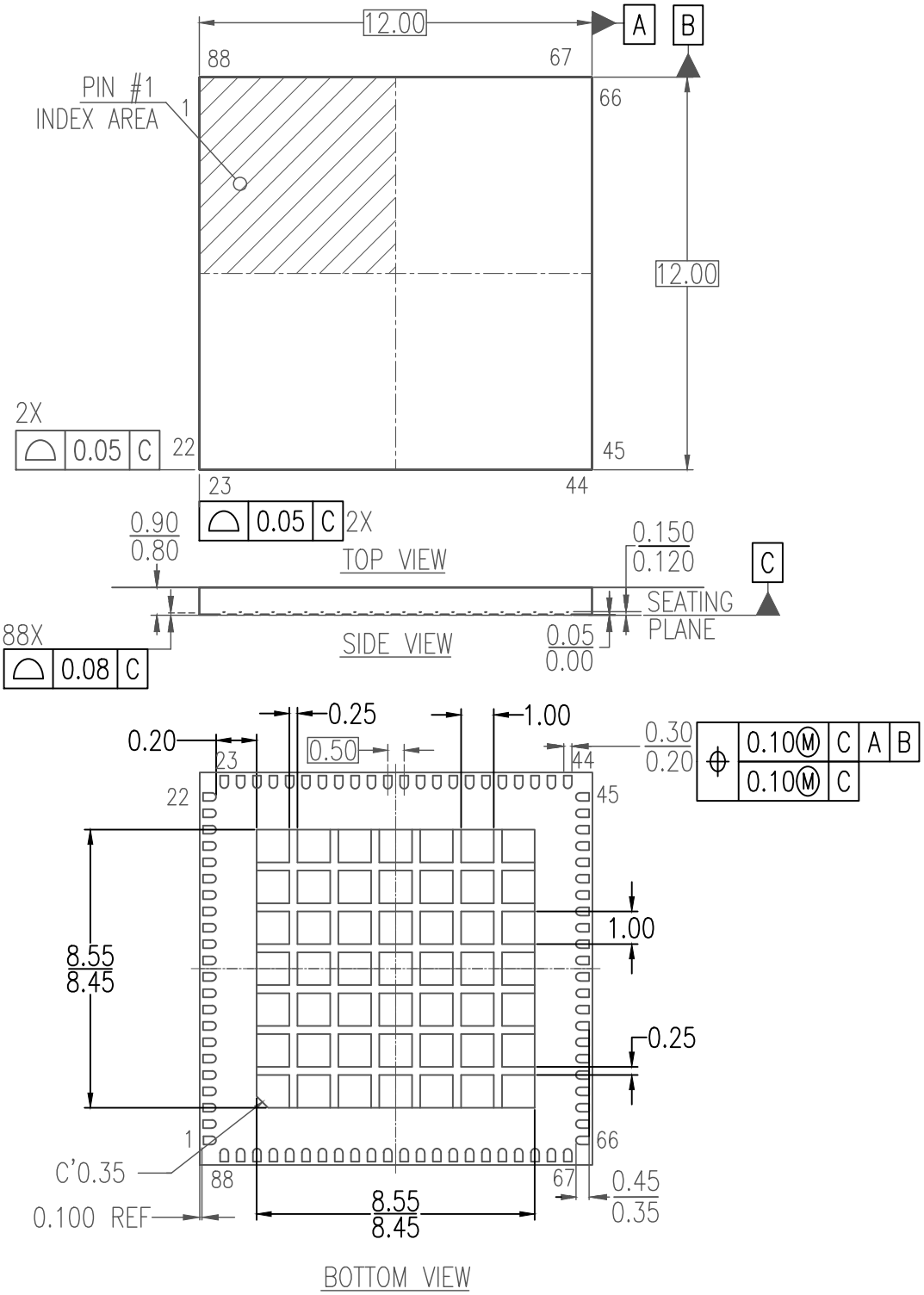

NOTES:

1. ALL DIMENSIONING AND TOLERANCING CONFORM TO ANSI Y14.5M-1982
2. ALL DIMENSION ARE IN MILLIMETERS

© Renesas Electronics Corporation

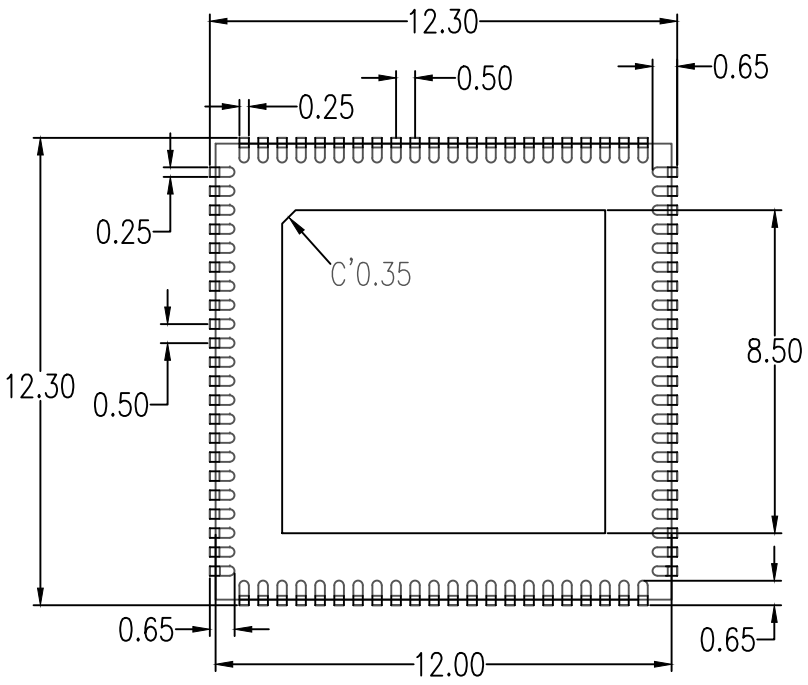

RECOMMENDED LAND PATTERN DIMENSION

NOTES:

1. ALL DIMENSION ARE IN MM. ANGLES IN DEGREES
2. TOP DOWN VIEW ON PCB
3. LAND PATTERN RECOMMENDATION PER IPC-7351B GENERIC REQUIREMENT FOR SURFACE MOUNT DESIGN AND LAND PATTERN

Package Revision History		
Date Created	Rev No.	Description
June 14, 2018	Rev 01	Change QFN to VFQFPN Correct land Pattern Calculation
Sept 5, 2017	Rev 00	Initial Release

© Renesas Electronics Corporation