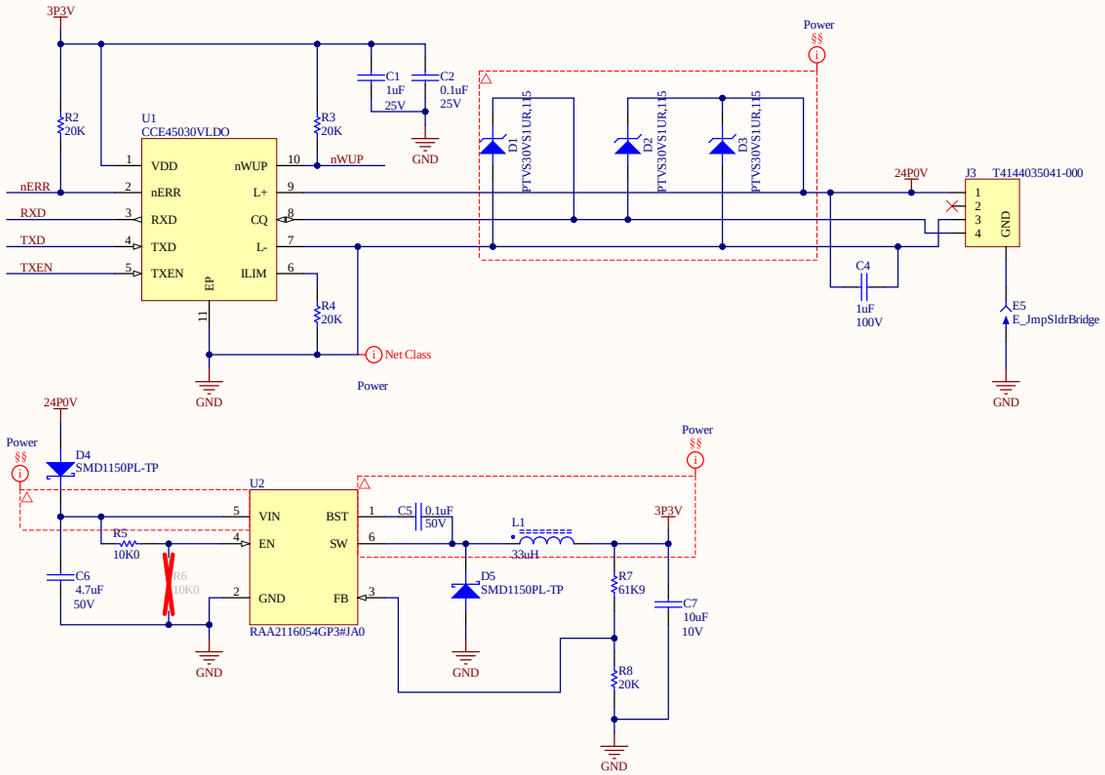

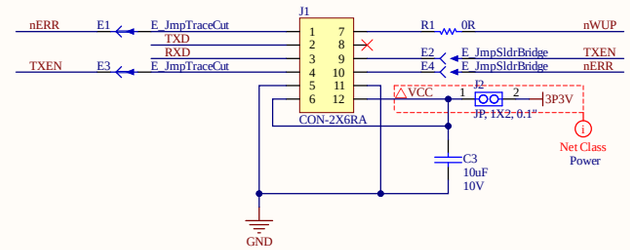

PMOD Interface Type 3A (expanded UART)

Rubber Foot, Black, 6.4mm dia, 2.1mm high

FOOT-000003-01

FD1 FD2 FD3

FID, 1R27 FID, 1R27 FID, 1R27

4117 Emperor Blvd
Suite 100
Durham
NC 27703

Title

QCIOT-CCE4503POCZ

Size: B	Number:	Revision: A
Date: 2/13/2023	Sheet 1 of 1	
File: QCIOT-CCE4503POCZ Rev A.SchDoc		