EMBOSS TAPE CONTAINER

Tape Dimensions

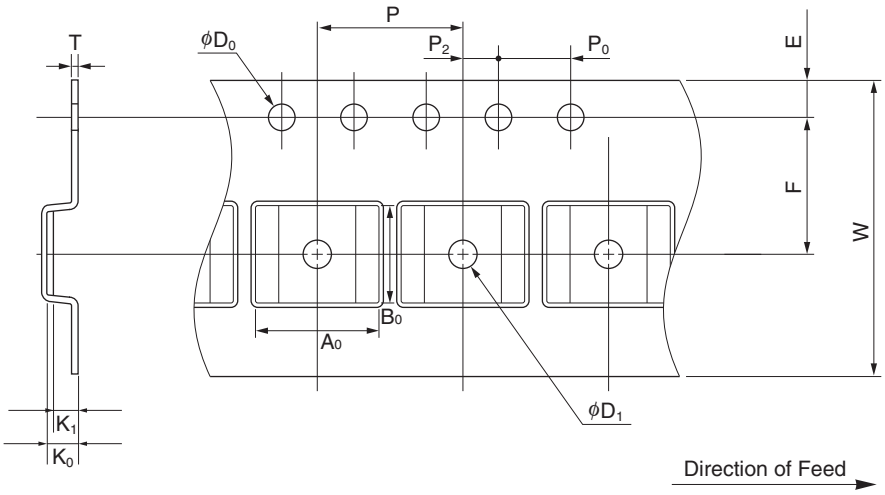

(Unit :mm)

Symbol	Specification
A_0	6.9
B_0	5.6
K_0	1.7
K_1	1.3
W	16.0±0.3
F	7.5±0.1
E	1.75±0.1
P	8.0±0.1
P_2	2.0±0.1
P_0	4.0±0.1
D_0	$1.5^{+0.1}_{-0}$
T	0.3
D_1	1.5 MIN.

Reel Dimensions

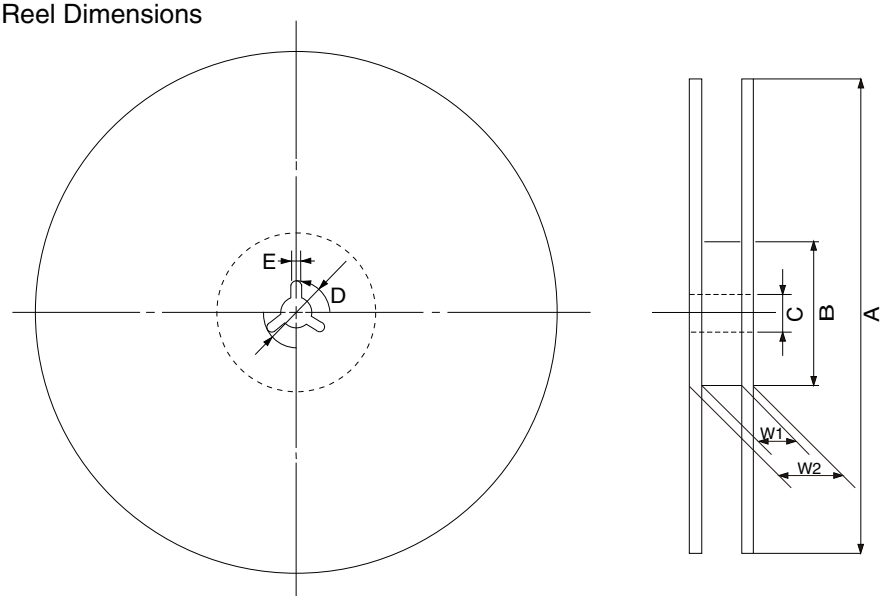

(Unit: mm)

Symbol	Specification
A	ϕ330±2.0
B	ϕ100
C	ϕ13.0±0.2
D	ϕ21.0±0.8
E	2.0±0.5
W_1	17.5
W_2	21.5

Applied Package	Quantity (pcs)
14-pin Plastic TSSOP (5.72 mm (225))	2,500 MAX.
16-pin Plastic TSSOP (5.72 mm (225))	

© 2010 Renesas Electronics Corporation. All rights reserved.