Magazine code	SP070PC	Renesas code	Previous code	Maximum storage No. IC/Magazine	Maximum storage No. Magazine/Inner box	Maximum storage No. IC/Inner box	Packing form
Magazine material	PVC (Polyvinyl chloride)	PRSS0008AA-A	8P5	25	60	1500	Dry pack
		PRZP0014DA-A	14P5A	25	100	2500	Non dry pack
Treatment	Antistatic						
Length(mm)	550 $^{+0}_{-1.5}$						

Unit:mm

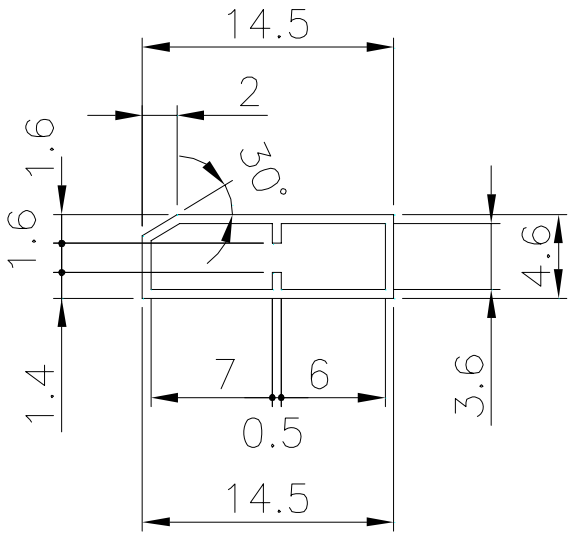

© 2012 Renesas Electronics Corporation. All rights reserved.