Package Outline Drawing

L23.15x15

23 LEAD QUAD FLAT NO-LEAD PLASTIC PACKAGE (PUNCH QFN)

Rev 3, 10/10

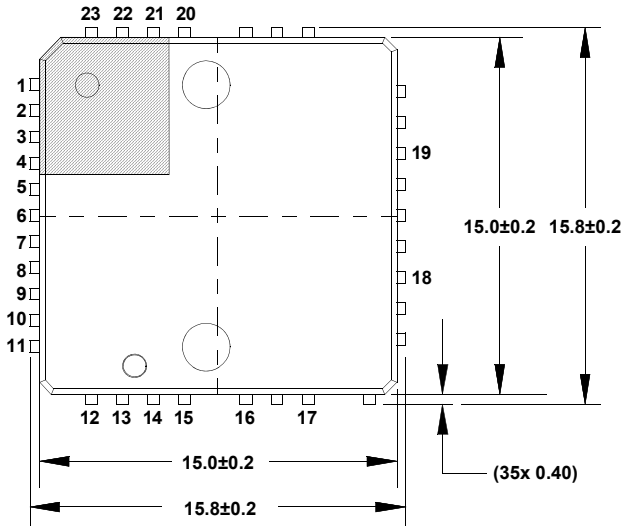

TOP VIEW

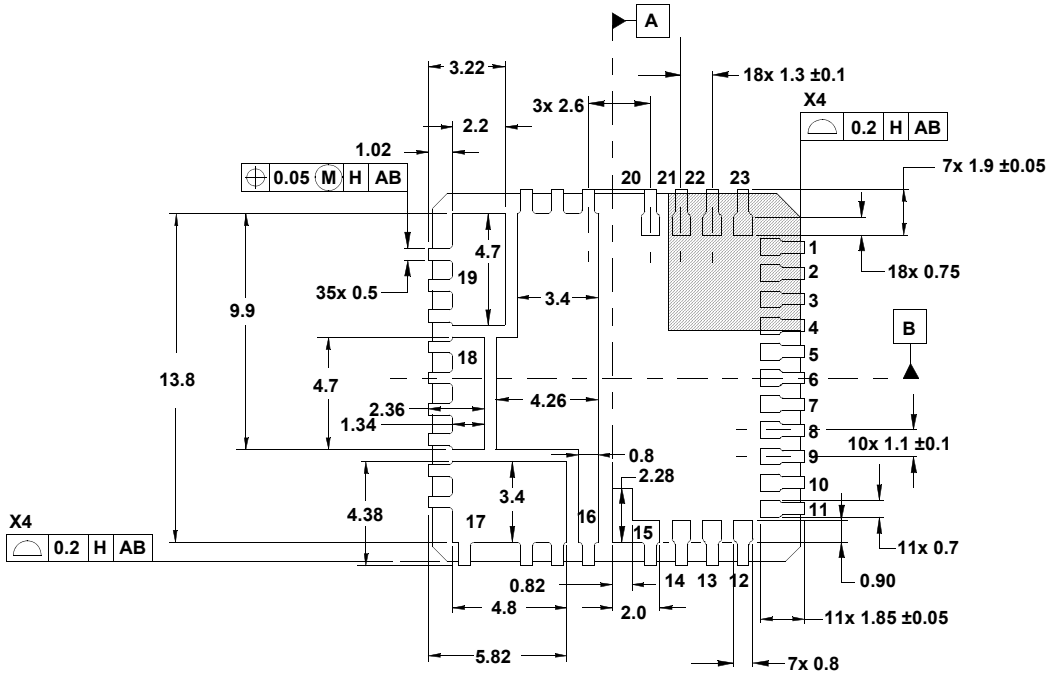

BOTTOM VIEW

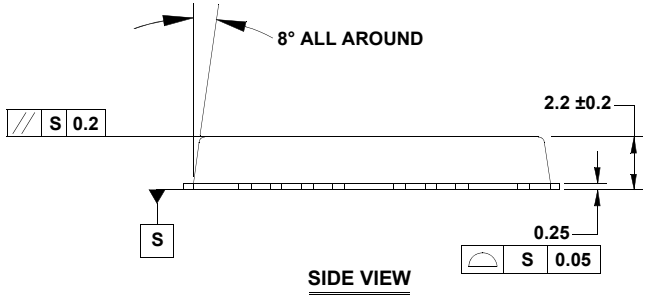

SIDE VIEW

NOTES:

1. Dimensions are in millimeters.
2. Unless otherwise specified, tolerance : Decimal ± 0.2; Body Tolerance ±0.2mm
3. The configuration of the pin #1 identifier is optional, but must be located within the zone indicated. The pin #1 identifier may be either a mold or mark feature.

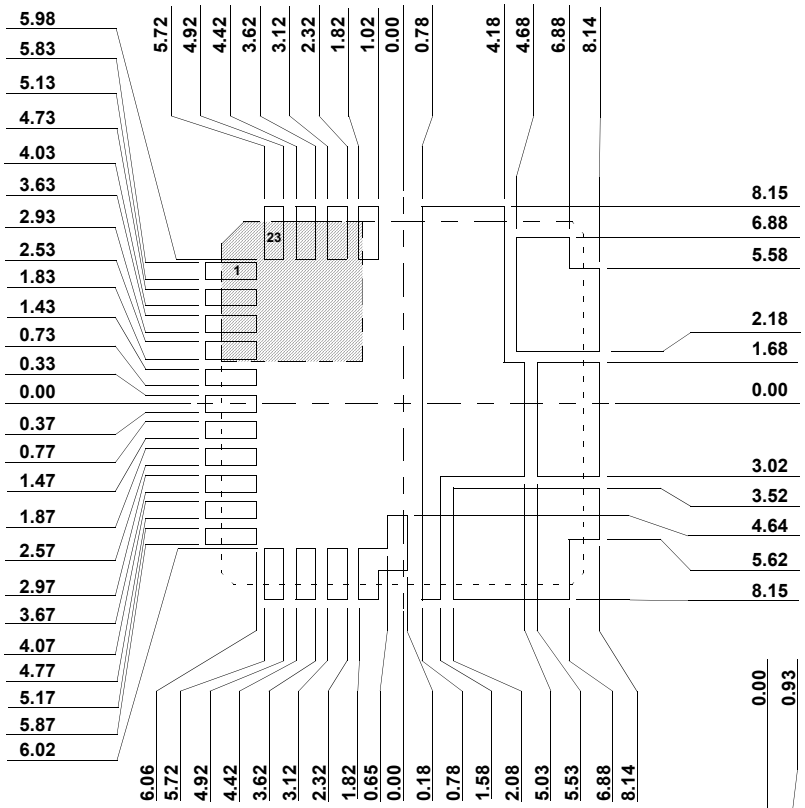

TYPICAL RECOMMENDED LAND PATTERN

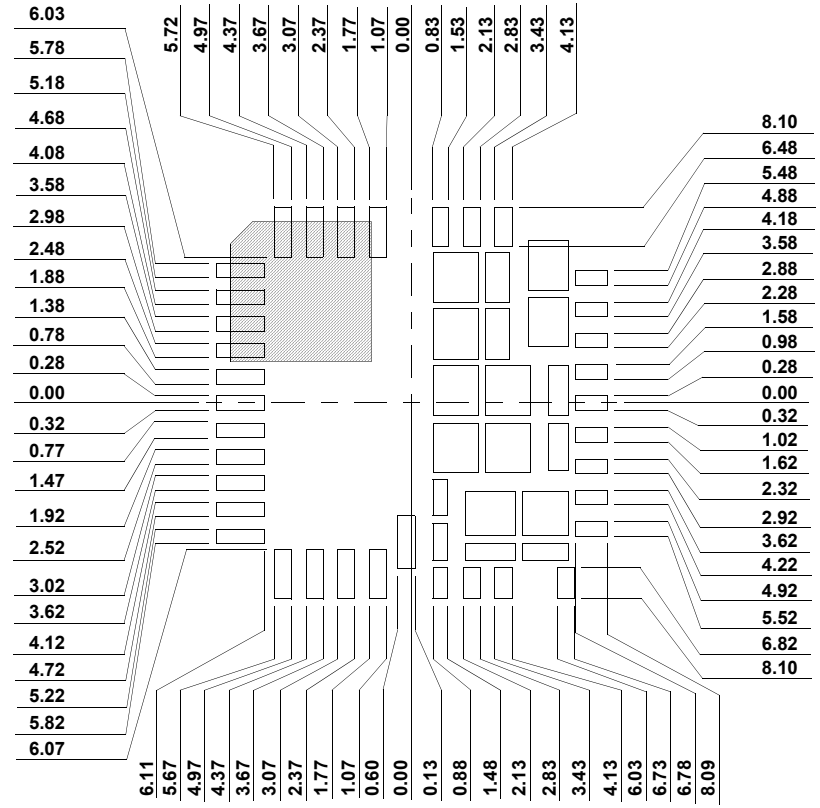

STENCIL PATTERN WITH SQUARE PADS-1

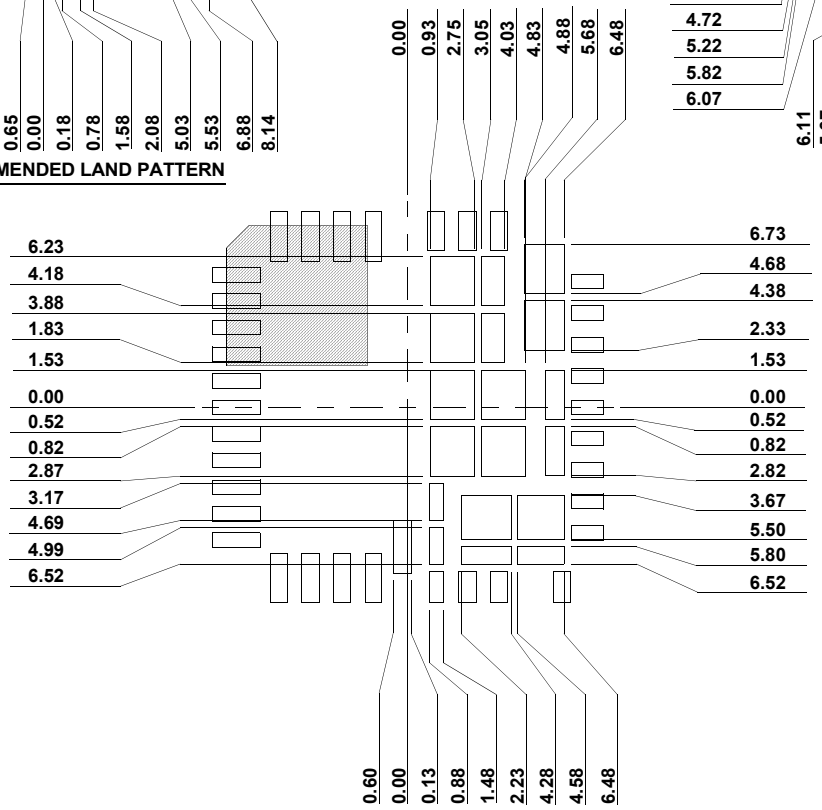

STENCIL PATTERN WITH SQUARE PADS-2