JEITA Package Code	RENESAS Code	Previous Code	MASS (Typ) [g]
P-HLQFP176-20x20-0.40	PLQP0176LD-A	—	1.32

Unit: mm

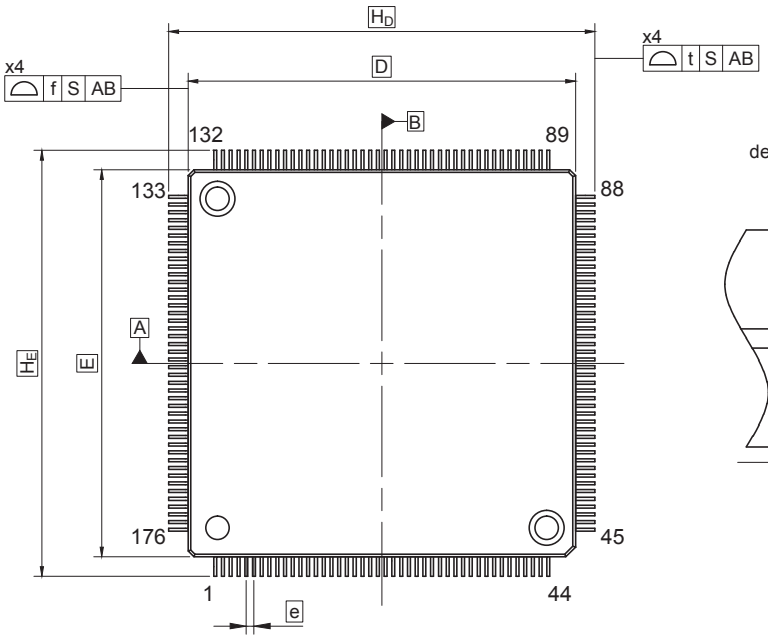

detail of lead end

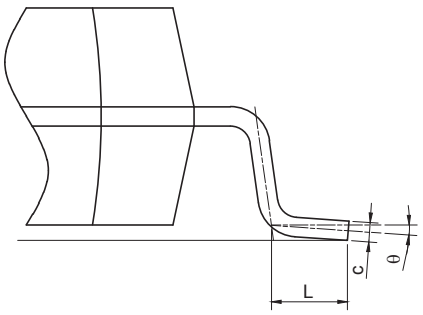

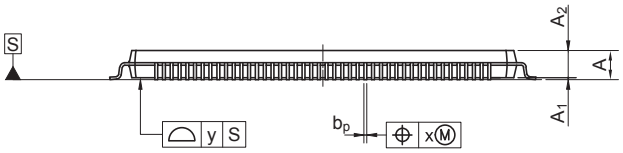

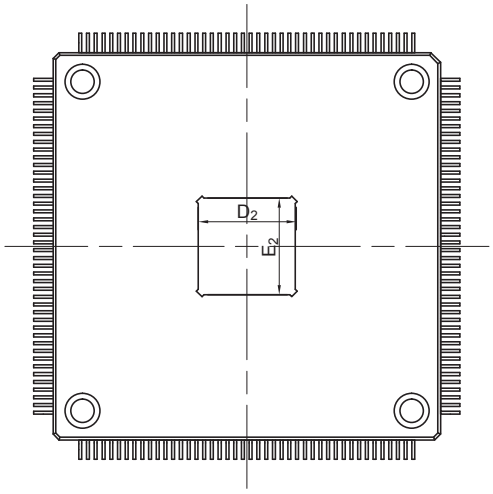

Reference Symbol	Dimensions in millimeters		
	Min	Nom	Max
E	—	20.00	—
D	—	20.00	—
A_2	—	1.40	—
H_D	—	22.00	—
H_E	—	22.00	—
f	—	—	0.20
A	—	—	1.70
A_1	0.05	0.10	0.15
L	—	0.50	—
b_p	0.13	—	0.23
c	0.09	—	0.20
e	—	0.40	—
θ	0°	3°	8°
x	—	—	0.07
y	—	—	0.08
t	—	—	0.25
D_2	—	5.00	—
E_2	—	5.00	—

© 2014 Renesas Electronics Corporation. All rights reserved.