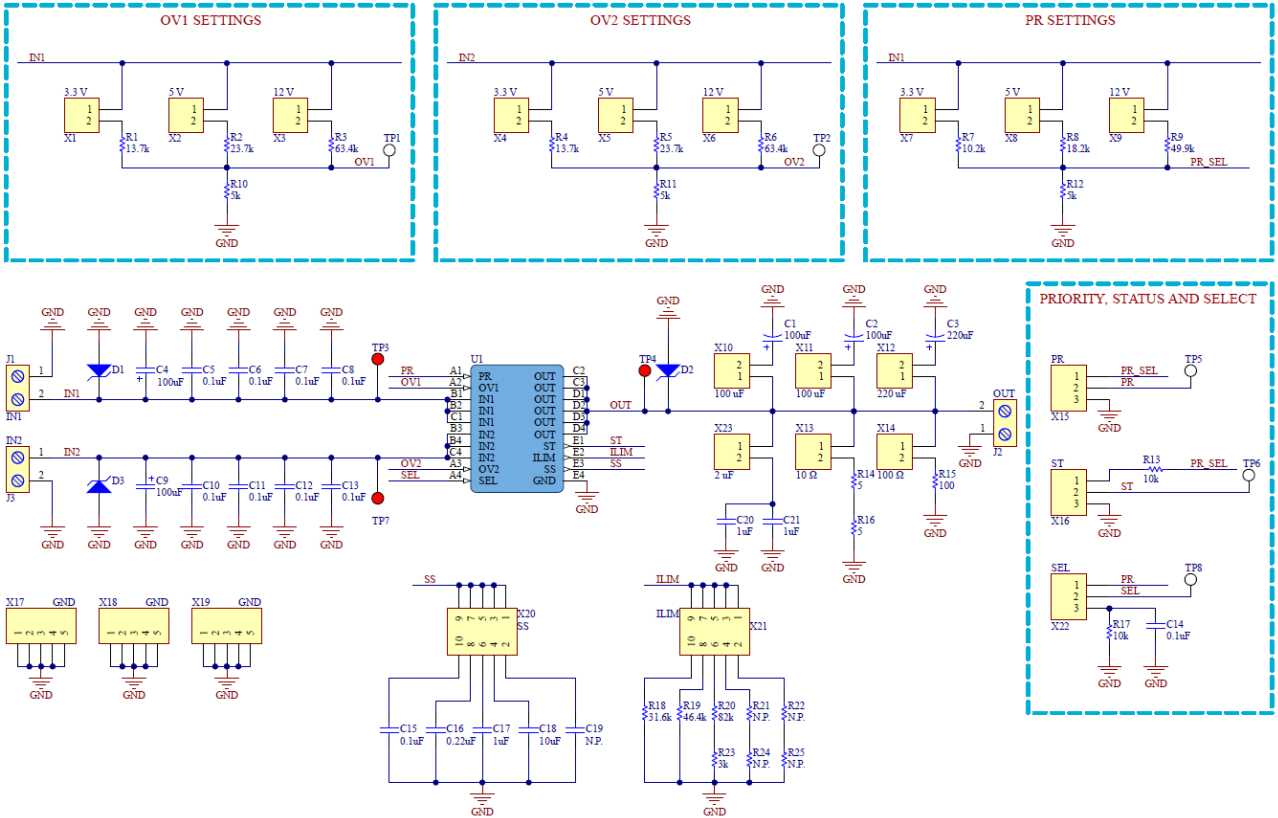
OV1 SETTINGS
IN1
3.3 V
5 V
12 V
X1
X2
X3
R1 13.7k
R2 23.7k
R3 63.4k
TP1
OV1
R10 5k
GND
OV2 SETTINGS
IN2
X4
X5
X6
R4 13.7k
R5 23.7k
R6 63.4k
TP2
OV2
R11 5k
PR SETTINGS
X7
X8
X9
R7 10.2k
R8 18.2k
R9 49.9k
PR_SEL
R12 5k
PRIORITY, STATUS AND SELECT
PR
X15
TP5
ST
X16
R13 10k
TP6
SEL
X22
TP8
R17 10k
C14 0.1uF
J1
IN1
J3
IN2
D1
D3
C4 100uF
C5 0.1uF
C6 0.1uF
C7 0.1uF
C8 0.1uF
C9 100uF
C10 0.1uF
C11 0.1uF
C12 0.1uF
C13 0.1uF
TP3
TP7
PR
OV1
OV2
SEL
U1
A1 PR
A2 OV1
B1 IN1
B2 IN1
C1 IN1
B3 IN1
B4 IN2
C4 IN2
A3 IN2
A4 OV2
SEL
OUT
C2 OUT
C3 OUT
D1 OUT
D2 OUT
D3 OUT
D4 OUT
E1 ST
E2 ILIM
E3 SS
E4 GND
TP4
D2
C1 100uF
C2 100uF
C3 220uF
X10 100 uF
X11 100 uF
X12 220 uF
X23 2 uF
X13 10 Ω
X14 100 Ω
R14 5
R15 100
R16 5
C20 1uF
C21 1uF
J2
X17
X18
X19
SS
X20
C15 0.1uF
C16 0.22uF
C17 1uF
C18 10uF
C19 N.P.
ILIM
X21
R18 31.6k
R19 46.4k
R20 82k
R21 N.P.
R22 N.P.
R23 3k
R24 N.P.
R25 N.P.